CONSTRUCTION DOCUMENTS FOR

BEAUFORT COUNTY COMMUNITY COLLEGE

INDUSTRIAL TRADES TRAINING CENTER

AURORA, NC

SCO ID #23-27044-01A

JKF PROJECT NO. 2024-10

JANUARY 6, 2025

JOHN K. FARKAS
REGISTERED ARCHITECT
1/23/2025
5922
GREENVILLE, N.C.

JKF ARCHITECTURE

625 LYNNDALE CT. SUITE F GREENVILLE, NC 27858 (252)355-1068 PHONE

JKF ARCHITECTURE, P.C.
REGISTERED ARCHITECTURAL CORPORATION
CERT. NO. 51351
NORTH CAROLINA
GREENVILLE, NC

THE EAST GROUP
CIVIL ENGINEERS
324 S. EVANS ST.
GREENVILLE, NC 27834
252-758-3746

NESER & ROOMSBURG, PA
STRUCTURAL ENGINEERS
748 LORD DUNMORE DRIVE, STE. 101
VIRGINIA BEACH, VA 23464
757-474-0612

ATLANTEC ENGINEERS, PA
PLUMBING, MECHANICAL & ELECTRICAL ENGINEERS
3221 BLUE RIDGE ROAD, SUITE 113
RALEIGH, NC 27612
919-571-1111

ROOM FINISH SCHEDULE (SEE FLOOR PLANS)

ROOM NAME
101
A | B | C
- WALL FINISH
- BASE MATERIAL/FINISH
- FLOOR MATERIAL/FINISH

FLOOR MATERIALS/FINISH

CT	CERAMIC TILE
EC	EXPOSED CONCRETE, SEALED
LV	LUXURY VINYL TILE

BASE MATERIALS

CT	CERAMIC TILE
R	RUBBER

WALL MATERIALS/FINISH

CT	CERAMIC TILE
P	PAINTED GYPSUM BOARD

REFLECTED CEILING PLAN LEGEND

ROOM NAME 101 / CLG.	HGT.	ROOM NO. / FIN. CLG. HEIGHT AFF.
	CEILING MATERIAL
	INDIRECT LAY-IN LIGHT FIXTURE (SEE ELECTRICAL DRAWINGS FOR SIZE AND TYPE)
	DIRECT/INDIRECT PENDENT MOUNTED LIGHT FIXTURE (SEE ELECTRICAL DRAWINGS FOR SIZE AND TYPE)
	SUPPLY AIR DIFFUSER
	EXHAUST AIR GRILLE
	DOWNLIGHT FIXTURE
	EXIT SIGN / SIGN FACE / DIRECTION ARROW IF NEEDED
SD	SMOKE DETECTOR
ST	STROBE
SD	HORN STROBE
OS	OCCUPANCY SENSOR
X'-X" / XXX	DATUM ABOVE FIN. FLOOR / CEILING MATERIAL (SEE LEGEND)

CEILING MATERIALS LEGEND

APC	ACOUSTICAL PANEL CEILING (IF FOLLOWED BY A NUMERAL DENOTES SPECIAL TYPE AS SPECIFIED)
EXPD	EXPOSED STRUCTURE PAINTED

GENERAL PROJECT LEGEND

A1 / A3.1	REFERENCE NO. / DRAWING NO.
	DENOTES CHANGE IN FINISHED FLOOR MATERIAL
A1 / A4 A4.1 A2 / A3	ELEVATION REFERENCE
100	DOOR NO. / DOOR ASSEMBLY DESIGNATION / HARDWARE SET NO. / DOOR GROUP NO.
4X	PARTITION TYPE (SEE DRAWING A7.1) / DOT DENOTES SIDE W/SPECIAL FINISH
A / 1	GENERAL NOTE REFERENCE NUMBERS DESIGNATE DEMOLITION, LETTERS DESIGNATE CONSTRUCTION.
F	FIRE PULL

ARCHITECTURAL ABBREVIATIONS

APC	ACOUSTICAL PANEL CEILING
ADJ	ADJACENT
AFF	ABOVE FINISHED FLOOR
AL	ALUMINUM
ALT	ALTERNATE
AN	ANODIZED
ATTN	ATTENUATION
BD	BOARD
BIT	BITUMINOUS
BLKG	BLOCKING
BLKT	BLANKET
BM	BEAM
BOP	BOTTOM OF PLATE
BOS	BOTTOM OF STEEL
BRG	BEARING
CAB	CABINET
CAP	CAPACITY
CB	CATCH BASIN
C	CENTERLINE
CJ	CONTROL JOINT
CLG HT	CEILING HEIGHT
CLR	CLEAR
CLG	CEILING
CMU	CONCRETE MASONRY UNIT
COL	COLUMN
CONC	CONCRETE
CONSTR	CONSTRUCTION
CONT	CONTINUOUS
CONTR	CONTRACTOR
CT	CERAMIC TILE
DWG	DRAWING
EA	EACH
EC	ELECTRICAL CONTRACTOR
EF	EXHAUST FAN
ELEC	ELECTRICAL
ENCL	ENCLOSURE
EOS	EDGE OF SLAB
EWC	ELECTRIC WATER COOLER
EXIST	EXISTING
EXPD	EXPOSED
EXP JT	EXPANSION JOINT
EXT	EXTERIOR
FDN	FOUNDATION
FE	FIRE EXTINGUISHER
FFE	FINISHED FLOOR ELEVATION
FL	FLOOR
FRP	FIBERGLASS REINFORCED POLYESTER
FT	FIRE RETARDANT TREATED
FTG	FOOTING
FUR	FURRING
GA	GAUGE
GAL	GALLON
GALV	GALVANIZED
GB	GRAB BAR
GC	GENERAL CONTRACTOR
GL	GLASS
GN	GENERAL NOTE
GYP BD	GYPSUM BOARD
HDW	HARDWARE
HM	HOLLOW METAL
HT	HEIGHT
HVAC	HEATING, VENTILATION, AIR CONDITIONING
INT	INTERIOR
INSUL	INSULATION
INV	INVERT
JT	JOINT
LAV	LAVATORY
MANUF	MANUFACTURER
MC	MECHANICAL CONTRACTOR
MH	MANHOLE
MECH	MECHANICAL
MIN	MINIMUM
MO	MASONRY OPENING
MTD	MOUNTED
MTL	METAL
NTS	NOT TO SCALE
NIC	NOT IN CONTRACT
O/C	ON CENTER
OH	OVERHANG
OHD	OVERHEAD
OPNG	OPENING
PART	PARTITION
PC	PLUMBING CONTRACTOR
PGB	PAINTED GYPSUM BOARD
PGBR	PAINTED GYPSUM BOARD WITH REVEAL
PL	PLATE
P	PAINTED
REF	REFRIGERATOR
REINF	REINFORCE / REINFORCING
REQD	REQUIRED
RM	ROOM
RO	ROUGH OPENING
RSW	RAIL & STILE WOOD
SCHED	SCHEDULE
SF	SQUARE FEET
SIM	SIMILAR
SPECS	SPECIFICATIONS
SS	STAINLESS STEEL
STD	STANDARD
STL	STEEL
STRUCT	STRUCTURE / STRUCTURAL
SUSP	SUSPENDED
TC	TOP CURB
TF	TRANSPARENT FINISH
TG	TOP GRATE
TEMP	TEMPERED
THK	THICK
TJ	TOP OF JOIST
TOB	TOP OF BRICK
TOM	TOP OF MASONRY
TOP	TOP OF PLATE
TOS	TOP OF SLAB
TOW	TOP OF WALL
TYP	TYPICAL
T/S	TOP OF STEEL
TS	TUBE STEEL
UNO	UNLESS OTHERWISE NOTED
VAR	VARIES
VERT	VERTICAL
VIF	VERIFY IN FIELD
WD	WOOD
WDW	WINDOW
WSC	WOOD SOLID CORE
WWF	WELDED WIRE FABRIC
W/	WITH

2018 APPENDIX B
BUILDING CODE SUMMARY FOR ALL COMMERCIAL PROJECTS
(EXCEPT 1 AND 2-FAMILY DWELLINGS AND TOWNHOUSES)
(Reproduce the following data on the building plans sheet 1 or 2)

Name of Project: BEAUFORT COUNTY COMMUNITY COLLEGE INDUSTRIAL TRAINING CENTER
Address: S. FIFTH ST. LOT 19 TOWN OF AURORA INDUSTRIAL PARK, AURORA, NC Zip Code: 27806
Owner/Authorized Agent: SAMMY DEANS Phone #: (252)-940-6423 E-Mail: Sammy.deans@beaufort.edu
Owned By: County
Code Enforcement Jurisdiction: County

CONTACT:

DESIGNER	FIRM	NAME	LICENSE #	TELEPHONE #	E-MAIL
Architectural	JKF Architecture	John K. Farkas, AIA	NC 5922	(252)355-1068	jkf@jkf-arch.com
Electrical	Atlantec Engineers	Alex R. Bowling, P.E.	NC 058287	(919)571-1111	Alex@atlantecengineers.com
Fire Alarm	Atlantec Engineers	Alex R. Bowling, P.E.	NC 058287	(919) 571-1111	Alex@atlantecengineers.com
Plumbing	Atlantec Engineers	James B. DelPapa, Jr.	NC 22035	(919) 571-1111	jim@atlantecengineers.com
Mechanical	Atlantec Engineers	Harrison Holt, P.E.	NC 049754	(919) 571-1111	Harrison@atlantecengineers.com
Structural	Neser & Roomsburg P.E.	Kevin Roomsburg, P.E.	NC 022830	(757)474-0612	kmr@nrwengineering.com
Civil	The East Group	Michelle Clements, P.E.	NC 029422	(252) 758-3746	michelle.clements@eastgroup.com

2018 NC BUILDING CODE: New Building
2018 NC EXISTING BUILDING CODE: N/A
CONSTRUCTED: (date) N/A **CURRENT OCCUPANCY(S)** (Ch. 3): N/A
RENOVATED: (date) N/A **PROPOSED OCCUPANCY(S)** (Ch. 3): Business
RISK CATEGORY (Table 1604.5): **Current:** N/A **Proposed:** II

BASIC BUILDING DATA
Construction Type: II-B
Sprinklers: No N/A
Standpipes: No
Primary Fire District: No **Flood Hazard Area:** No
Special Inspections Required: No

Gross Building Area Table

FLOOR	EXISTING (SQ FT)	NEW (SQ FT)	SUB-TOTAL
1st Floor	N/A	5,006	5,006
TOTAL		5,006	5,006

ALLOWABLE AREA
Primary Occupancy Classification(s): Business
Accessory Occupancy Classification(s): NONE
Incidental Uses (Table 509): NONE
Special Uses (Chapter 4 – List Code Sections): NONE
Special Provisions: (Chapter 5 – List Code Sections): NONE
Mixed Occupancy: No Separation: N/A Exception: N/A
Select one:

$$\frac{\text{Actual Area of Occupancy A}}{\text{Allowable Area of Occupancy A}} + \frac{\text{Actual Area of Occupancy B}}{\text{Allowable Area of Occupancy B}} \leq 1$$

$$\_\_\_ + \_\_\_ + \ldots = \_\_\_ \leq 1.00$$

STORY NO.	DESCRIPTION AND USE	(A) BLDG AREA PER STORY (ACTUAL)	(B) TABLE 506.2[4] AREA	(C) AREA FOR FRONTAGE INCREASE[1,5]	(D) ALLOWABLE AREA PER STORY OR UNLIMITED[2,3]
1	B-EDUCATION ABOVE THE 12TH GRADE	4,565	23,000	N/A	23,000

[1] Frontage area increases from Section 506.3 are computed thus:
a. Perimeter which fronts a public way or open space having 20 feet minimum width = 288' (F)
b. Total Building Perimeter = 288' (P)
c. Ratio (F/P) = 1 (F/P)
d. W = Minimum width of public way = ≥30' (W)
e. Percent of frontage increase $I_f = 100[F/P - 0.25] \times W/30 = 75$ (%)
[2] Unlimited area applicable under conditions of Section 507.
[3] Maximum Building Area = total number of stories in the building x D (maximum 3 stories) (506.2).
[4] The maximum area of open parking garages must comply with Table 406.5.4.
[5] Frontage increase is based on the unsprinklered area value in Table 506.2.

ALLOWABLE HEIGHT

	ALLOWABLE	SHOWN ON PLANS	CODE REFERENCE [1]
Building Height in Feet (Table 504.3) [2]	55'	25'	
Building Height in Stories (Table 504.4) [3]	3	1	

[1] Provide code reference if the "Shown on Plans" quantity is not based on Table 504.3 or 504.4.
[2] The maximum height of air traffic control towers must comply with Table 412.3.1.
[3] The maximum height of open parking garages must comply with Table 406.5.4.

FIRE PROTECTION REQUIREMENTS

BUILDING ELEMENT	FIRE SEPARATION DISTANCE (FEET)	RATING REQ'D	RATING PROVIDED (W/____* REDUCTION)	DETAIL # AND SHEET #	DESIGN # FOR RATED ASSEMBLY	SHEET # FOR RATED PENETRATION	SHEET # FOR RATED JOINTS
Structural Frame, including columns, girders, trusses							
Bearing Walls	N/A						
Exterior							
North							
East							
West							
South							
Interior							
Nonbearing Walls and Partitions Exterior walls							
North	>30'	0	0				
East	>30'	0	0				
West	>30'	0	0				
South	>30'	0	0				
Interior walls and partitions		0	0				
Floor Construction Including supporting beams and joists		N/A	N/A				
Floor Ceiling Assembly		0	0				
Columns Supporting Floors		0	0				
Roof Construction, including supporting beams and joists		0	0				
Roof Ceiling Assembly		0	0				
Columns Supporting Roof		0	0				
Shaft Enclosures - Exit		N/A	N/A				
Shaft Enclosures - Other		N/A	N/A				
Corridor Separation		0 NOTE A	0				
Occupancy/Fire Barrier Separation		N/A					
Party/Fire Wall Separation		N/A					
Smoke Barrier Separation		N/A					
Smoke Partition		N/A					
Tenant/Dwelling Unit/ Sleeping Unit Separation		N/A					
Incidental Use Separation		N/A					

* Indicate section number permitting reduction
NOTE A: NO RATING PER TABLE 1020.1, FOOT NOTE "F".
f. Exit access corridors are not required to be rated on any single tenant floor or in any single tenant space, if 1-hour fire-resistance-rated floor/ceiling assemblies are provided in multistory buildings and fire partitions are provided between other tenant spaces on the same floor. The structure supporting such floor/ceiling assemblies and fire partitions is not required to be rated in Types IIB, IIIB and VB construction.

PERCENTAGE OF WALL OPENING CALCULATIONS

FIRE SEPARATION DISTANCE (FEET) FROM PROPERTY LINES	DEGREE OF OPENINGS PROTECTION (TABLE 705.8)	ALLOWABLE AREA (%)	ACTUAL SHOWN ON PLANS (%)
>30 ALL SIDES	UP/NS	NO LIMITS	

LIFE SAFETY SYSTEM REQUIREMENTS

Emergency Lighting: Yes
Exit Signs: Yes
Fire Alarm: Yes
Smoke Detection Systems: Yes
Carbon Monoxide Detection: No

LIFE SAFETY PLAN REQUIREMENTS

Life Safety Plan Sheet #: BC1.1

- ☒ Fire and/or smoke rated wall locations (Chapter 7)
- ☐ Assumed and real property line locations (if not on the site plan)
- ☒ Exterior wall opening area with respect to distance to assumed property lines (705.8)
- ☒ Occupancy Use for each area as it relates to occupant load calculation (Table 1004.1.2)
- ☒ Occupant loads for each area
- ☒ Exit sign locations (1013)
- ☒ Exit access travel distances (1017)
- ☒ Common path of travel distances (Tables 1006.2.1 & 1006.3.2(1))
- ☐ Dead end lengths (1020.4) N/A
- ☒ Clear exit widths for each exit door
- ☒ Maximum calculated occupant load capacity each exit door can accommodate based on egress width (1005.3)
- ☒ Actual occupant load for each exit door
- ☐ A separate schematic plan indicating where fire rated floor/ceiling and/or roof structure is provided for purposes of occupancy separation N/A
- ☒ Location of doors with panic hardware (1010.1.10)
- ☐ Location of doors with delayed egress locks and the amount of delay (1010.1.9.7) N/A
- ☐ Location of doors with electromagnetic egress locks (1010.1.9.9) N/A
- ☒ Location of doors equipped with hold-open devices
- ☐ Location of emergency escape windows (1030) N/A
- ☐ The square footage of each fire area (202) N/A
- ☐ The square footage of each smoke compartment for Occupancy Classification I-2 (407.5) N/A
- ☐ Note any code exceptions or table notes that may have been utilized regarding the items above N/A

ACCESSIBLE DWELLING UNITS – N/A

ACCESSIBLE PARKING
(SECTION 1106)

LOT OR PARKING AREA	TOTAL # OF PARKING SPACES REQUIRED	TOTAL # OF PARKING SPACES PROVIDED	# OF ACCESSIBLE SPACES PROVIDED 96" SPACES	132" SPACES	TOTAL # ACCESSIBLE PROVIDED
1	0	19	1	0	2
TOTAL	0	19	1	0	2

PLUMBING FIXTURE REQUIREMENTS
(TABLE 2902.1)

USE		WATERCLOSETS MALE	WATERCLOSETS FEMALE	WATERCLOSETS UNISEX	URINALS	LAVATORIES MALE	LAVATORIES FEMALE	LAVATORIES UNISEX	SHOWERS /TUBS	DRINKING FOUNTAINS REGULAR	DRINKING FOUNTAINS ACCESSIBLE
SPACE	EXIST'G										
	NEW	1	2	0	1	2	2	0	0	1	1
	REQ'D	1	2	0	0	1	1	0	0	1	1

SPECIAL APPROVALS

Special approval: (Local Jurisdiction, Department of Insurance, OSC, DPI, DHHS, etc., describe below)

SCO, BEAUFORT CO. INSPECTIONS

ENERGY SUMMARY

ENERGY REQUIREMENTS:
The following data shall be considered minimum and any special attribute required to meet the energy code shall also be provided. Each Designer shall furnish the required portions of the project information for the plan data sheet. If performance method, state the annual energy cost for the standard reference design vs annual energy cost for the proposed design.

Existing building envelope complies with code: N/A

Exempt Building: No Provide code or statutory reference:

Climate Zone: 3A

Method of Compliance: Energy Code - Prescriptive

THERMAL ENVELOPE (Prescriptive method only)

Roof/ceiling Assembly (each assembly)
Description of assembly: Standing Seam Mtl. Roof, 6" Extruded Polystyrene. Over ½" Glass-mat Sheathing
U-Value of total assembly: U-0.033
R-Value of insulation: R-30CI Provided, R-25CI Min. Required _____
Skylights in each assembly: N/A

Exterior Walls (each assembly)
Description of assembly: 4" Facebrick, 2" Air space, 2" Rigid Insulation, Dampproofing, 8" CMU Block, Interior Finish.
U-Value of total assembly: U-0.1
R-Value of insulation: R10CI Provided, R-7.5CI Required

Openings (windows or doors with glazing)	Exterior FRP Door	Alum. Entrance	Windows
U-Value of Assembly:	0.125	0.38	0.38
Solar heat gain coefficient:	N/A	0.25	0.25
Projection factor:	N/A	0	0
Door R-Values:	8.0	3.5	N/A

Walls below grade (each assembly) – N/A

Floors over unconditioned space (each assembly) – N/A

Floors slab on grade
Description of assembly: 4" Concrete slab on grade with vapor barrier on 4" porous fill.
R-Value of insulation: R-7.5
Horizontal/vertical requirement: YES
slab heated: NO

Description of assembly: 6" Concrete slab on grade with vapor barrier on 4" porous fill.
R-Value of insulation: R-8.75
Horizontal/vertical requirement: YES
slab heated: NO

2018 APPENDIX B
BUILDING CODE SUMMARY FOR ALL COMMERCIAL PROJECTS
STRUCTURAL DESIGN
(PROVIDE ON THE STRUCTURAL SHEETS IF APPLICABLE)

DESIGN LOADS:

Importance Factors: Wind (I_S) 1.0; Snow (I_S) 1.0; Seismic (I_E) 1.0

Live Loads: Roof 20 psf; Floor 150 psf

Ground Snow Load: 10 psf

Wind Load: Ultimate Wind Speed 131 mph (ASCE-7)
Exposure Category C

SEISMIC DESIGN CATEGORY: B
Provide the following Seismic Design Parameters:
Risk Category (Table 1604.5) II
Spectral Response Acceleration S_S 11.3 %g S_1 5.8 %g
Site Classification (ASCE 7) D
Data Source: Field Test Geotech Exploration Report
Basic structural system Ordinary Masonry Shear Walls
Analysis Procedure: Equivalent Lateral Force
Architectural, Mechanical, Components anchored? No

LATERAL DESIGN CONTROL: Wind

SOIL BEARING CAPACITIES:
Field Test (provide copy of test report) 1500 psf
Pile size, type, and capacity N/A

DRAWING INDEX:

MATERIALS KEYING LEGEND

GENERAL NOTES

VICINITY MAP

SCO ID #23-27044-01A

NO	REVISION	DATE

SEAL: JOHN K. FARKAS REGISTERED ARCHITECT 4/23/2025 5922 GREENVILLE, N.C.

JKF ARCHITECTURE
625 LYNNDALE CT., SUITE F, GREENVILLE, NC 27858 252-355-1068

BEAUFORT COUNTY COMMUNITY COLLEGE INDUSTRIAL TRAINING CENTER
AURORA, NC

DRAWING TITLE: BUILDING CODE ANALYSIS, LEGENDS, SYMBOLS & ABBREVIATIONS

SCALE	N.T.S.
DRAWN	MBD
CHECKED	JKF
DATE	1-6-2025
PROJECT NO.	2024-10
DRAWING NO	BC1.0

BUILDING CODE ANALYSIS A15
N.T.S.

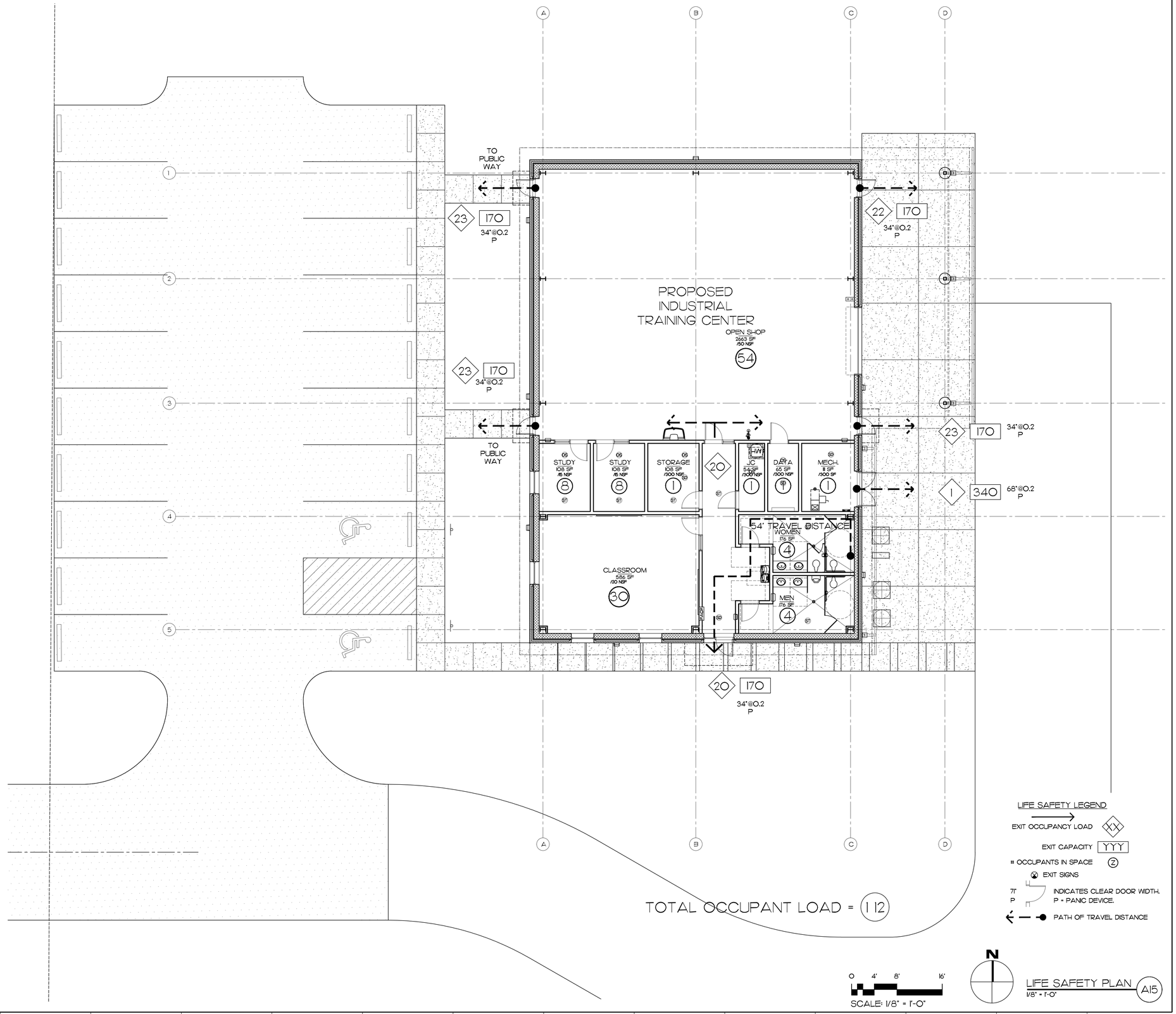

LIFE SAFETY PLAN A15
1/8" = 1'-0"

MATERIALS KEYING LEGEND

GENERAL NOTES

KEY PLAN

SCO ID #23-27044-01A

NO	REVISION	DATE

SEAL

JOHN K. FARKAS REGISTERED ARCHITECT 1/23/2025 5922 GREENVILLE, N.C.

JKF ARCHITECTURE

625 LYNNDALE CT., SUITE F, GREENVILLE, NC 27858 252-355-1068

BEAUFORT COUNTY COMMUNITY COLLEGE INDUSTRIAL TRAINING CENTER
AURORA, NC

DRAWING TITLE
LIFE SAFETY PLAN

SCALE	AS NOTED
DRAWN	JRH
CHECKED	JKF
DATE	1-6-2025
PROJECT NO.	2024-10
DRAWING NO	BCI.1

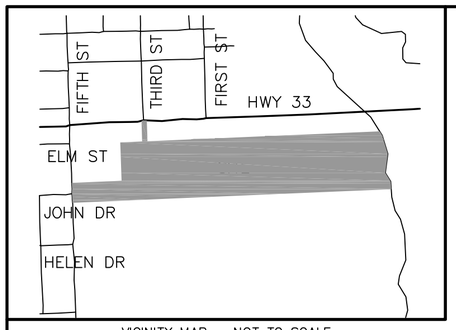

VICINITY MAP – NOT TO SCALE

NOTES

1) THIS PROPERTY IS LOCATED IN ZONE X AND AE AND IS PARTIALLY LOCATED WITHIN THE 1% FEMA FLOOD HAZARD AREA AS SHOWN HEREON AS TAKEN FROM N.F.I.P. RATE MAP DATED 6/19/2020 COMMUNITY PANEL NUMBER 3720656600K. B.F.E. = 6±
2) THIS PROPERTY IS SUBJECT TO THE TAR/PAMLICO RIVER RIPARIAN BUFFER RULES.
3) THE SURVEYOR MAKES NO GUARANTEE THAT THERE ARE NO OTHER EASEMENTS THAT MAY BENEFIT OR BURDEN THE SUBJECT PROPERTY.
4) INTERIOR FIELD DITCHES ARE NOT SHOWN.
5) SEE SHEET 2 FOR APPROVALS AND CERTIFICATIONS.
6) MINIMUM BUILDING SETBACK: FRONT = 50'

STATE OF NORTH CAROLINA PITT COUNTY

I, WILLIAM B. HILLIARD, CERTIFY THAT THIS PLAT WAS DRAWN UNDER MY SUPERVISION FROM AN ACTUAL SURVEY MADE UNDER MY SUPERVISION; (DEED DESCRIPTION RECORDED IN BOOK – PAGE –). THAT THE BOUNDARIES NOT SURVEYED ARE CLEARLY INDICATED AS DRAWN FROM INFORMATION FOUND IN BOOK – PAGE –; THAT THE RATIO OF PRECISION AS CALCULATED IS 1:10,000+; THAT THIS PLAT WAS PREPARED IN ACCORDANCE WITH G.S. 47-30 AS AMENDED. WITNESS MY ORIGINAL SIGNATURE, LICENSE NUMBER AND SEAL THIS DATE DAY OF MONTH, 2023.

L-4509

PRELIMINARY
NOT FOR RECORDATION
CONVEYANCE OR SALES

I, _____, REVIEW OFFICER OF BEAUFORT COUNTY, CERTIFY THAT THE MAP OR PLAT TO WHICH THIS CERTIFICATION IS AFFIXED MEETS ALL STATUTORY REQUIREMENTS FOR RECORDING.

REVIEW OFFICER

DATE

SITE DATA

TOTAL AREA	48.218 AC. ±
AREA IN LOTS	38.033 AC. ±
AREA IN STREETS	2.727 AC. ±
AREA IN OPEN SPACE	7.458 AC. ±
AVERAGE LOT SIZE	1.902 AC. ±
LINEAR FEET IN STREETS	1,862 L.F. ±

NOTE :
COMBINED SCALE FACTOR = 0.99987838

ALL DISTANCES ARE HORIZONTAL GROUND MEASUREMENTS IN FEET AND DECIMALS THEREOF UNLESS NOTED OTHERWISE.

NAD 83-2001 NC GRID

N.C.G.S.M. "ROWE"
N = 571,612.36 FT. (GRID)
E = 2,659,723.19 FT. (GRID)
NAVD 1988 ELEV = 8.71

N.C.G.S.M. "RULANE"
N = 571,608.87 FT. (GRID)
E = 2,657,439.46 FT. (GRID)
NAVD 1988 ELEV = 11.13

N 89°53'09" E
2283.17 (HORIZONTAL)
2282.89 (GRID)

605.38 (GRID)
605.45 (HORIZONTAL)
S 7°27'05" E

TOWN OF AURORA'S
THIRD STREET
60' RIGHT-OF-WAY
(UNDEVELOPED)
DB 757 PG 14
DB 2139 PG 189

THIRD STREET
60' PUBLIC RIGHT-OF-WAY

NC HIGHWAY 33
PUBLIC RIGHT-OF-WAY VARIES

FIRST STREET

TOWN OF AURORA
DB 2139 PG 389

SHEET 1
SHEET 2

JEAN J. HENRIES
DB 757 PG 14

AURORA PLAZA, LLC
DB 2061 PG 959
PC F SLIDE 52-9

FISCHER VILLAGE APARTMENTS
DB 798 PG 806

AURORA HOUSING LIMITED PARTNERSHIP
DB 969 PG 133

JOHN DRIVE
50' PUBLIC
RIGHT-OF-WAY

NCSR 1925 S 5TH STREET
60' PUBLIC RIGHT-OF-WAY

JOHN C. HOOKER
and wife LILLIAN V. HOOKER
DB 657 PG 402

TOWN OF AURORA
DB 756 PG 128

PCS PHOSPHATE COMPANY, INC.
TOWN OF AURORA
DB 1024 PG 588
DB 586 PG 492

PAUL CIRCLE (60' PUBLIC RIGHT-OF-WAY)

SANDY ACTON WAY (60' PUBLIC RIGHT-OF-WAY)

N 87°32'40" E
2492.96 (TOTAL)

N 87°32'40" E
1116.92 (TOT)

1117.59 (TOT)
S 87°32'40" W

S 87°33'25" W
3667.07 (TOT)

N 87°31'02" E
531.18

N 88°10'43" E
243.82

N 88°10'43" E
243.51

N 2°01'40" W
161.97

N 2°05'13" W
222.44

N 1°54'31" W
489.42 (TOT)

N 1°49'17" W
651.97 (TOT)

S 1°49'17" E
291.96

S 1°49'17" E
284.50

40' WIDE DRAINAGE EASEMENT

40' WIDE ACCESS AND UTILITY EASEMENT
DB 848 PG 368

30' WIDE ACCESS AND UTILITY EASEMENT
DB 586 PG 492

20' WIDE DRAINAGE EASEMENT

NIP WITNESS SET 15' FROM PROPERTY CORNER (TYP.)

DISTANCE IS IRON TO IRON (TYP.)

ZONE X
ZONE AE

1 1.322 AC.
2 1.105 AC.
3 1.106 AC.
4 1.106 AC.
5 1.005 AC.
6 1.005 AC.
7 1.005 AC.
8 1.005 AC.
12 1.121 AC.
13 1.121 AC.
14 1.121 AC.
15 1.135 AC.
16 1.135 AC.
17 1.161 AC.
18 1.182 AC.
19 2.713 AC.
20 1.141 AC.

LEGEND

ECM = EXISTING CONCRETE MONUMENT
EIP = EXISTING IRON PIPE
EIS = EXISTING IRON STAKE
● NIP = NEW IRON PIPE
NPK = NEW PK NAIL
= NOT TO SCALE
○ = NO POINT SET

APPROXIMATE LOCATION OF THE 1% FLOOD PLAIN LIMIT AS TAKEN FROM N.F.I.P. RATE MAPS DATED MAY 15, 2003 COMMUNITY PANEL 3720656600J. BASE FLOOD ELEVATION = 7

GRAPHIC SCALE: 1" = 100'
0 50 100 200

PRELIMINARY
NOT FOR RECORDATION
CONVEYANCE OR SALES

SHEET 1 OF 2
FINAL PLAT
OF THE
TOWN OF AURORA
INDUSTRIAL PARK

RICHLAND TOWNSHIP
BEAUFORT COUNTY

DATE
NORTH CAROLINA

REVISION	DATE	INIT.

DRAWN BY: WBH	PROJECT NO.: 20190222
SURVEYED BY: GDF/JAS	DATE: DATE
SCALE: 1" = 100'	DRAWING NAME: subd-mfr

THE EAST GROUP
324 S. EVANS ST.
GREENVILLE, NC 27834
(252) 758-3746
4325 LAKE BOONE TRAIL SUITE 311
RALEIGH, NC 27607
(919) 784-9330
CORPORATE LICENSE NO. C0206
▪ Engineering ▪ Architecture ▪ Surveying ▪ Technology

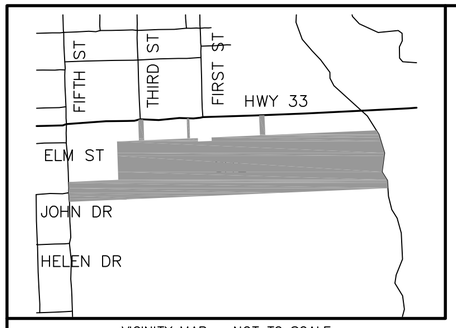

VICINITY MAP – NOT TO SCALE

I, CLIFF WILLIAMS, MAYOR OF THE TOWN OF AURORA, HEREBY CERTIFY THAT THAT THE TOWN OF AURORA IS THE OWNER OF THE PROPERTY SHOWN AND DESCRIBED HEREON, WHICH IS LOCATED IN THE SUBDIVISION JURISDICTION OF THE TOWN AND THAT THE TOWN OF AURORAI HEREBY ADOPT THIS PLAN OF SUBDIVISION WITH ITS FREE CONSENT, ESTABLISHED MINIMUM BUILDING SETBACK LINES, AND DEDICATE ALL STREETS, ALLEYS, WALKS, PARKS, AND OTHER SITES AND EASEMENTS TO PUBLIC OR PRIVATE USE AS NOTED FURTHERMORE, THE TOWN OF AURORA HEREBY DEDICATE ALL SANITARY SEWER, STORM SEWER AND WATER LINES TO THE TOWN

CLIFF WILLIAMS, MAYOR TOWN OF AURORA — DATE

I HEREBY CERTIFY THAT THE WATER SUPPLY AND SEWAGE DISPOSAL SYSTEMS INSTALLED OR PROPOSED FOR INSTALLATION IN THE TOWN OF AURORA INDUSTRIAL PARK SUBDIVISION MEET NECESSARY PUBLIC HEALTH REQUIREMENTS, AND ARE HEREBY APPROVED.

COUNTY HEALTH OFFICER OR HIS AUTHORIZED REPRESENTATIVE — DATE

I HEREBY CERTIFY THAT THE SUBDIVISION PLAT SHOWN HEREON HAS BEEN FOUND TO COMPLY WITH THE SUBDIVISION REGULATIONS FOR AURORA, NORTHCAROLINA, AND THAT THIS PLAT HAS BEEN APPROVED BY THE TOWN BOARD OF COMMISSIONERS FOR RECORDING IN THE OFFICE OF THE REGISTER OF DEEDS OF BEAUFORT COUNTY.

TOWN CLERK FOR BOARD OF COMMISSIONERS TOWN OF AURORA — DATE

STATE OF NORTH CAROLINA — PITT COUNTY

I, WILLIAM B. HILLIARD, CERTIFY THAT THIS PLAT WAS DRAWN UNDER MY SUPERVISION FROM AN ACTUAL SURVEY MADE UNDER MY SUPERVISION; (DEED DESCRIPTION RECORDED IN BOOK – PAGE –). THAT THE BOUNDARIES NOT SURVEYED ARE CLEARLY INDICATED AS DRAWN FROM INFORMATION FOUND IN BOOK – PAGE – ; THAT THE RATIO OF PRECISION AS CALCULATED IS 1:10,000+ ; THAT THIS PLAT WAS PREPARED IN ACCORDANCE WITH G.S. 47–30 AS AMENDED. WITNESS MY ORIGINAL SIGNATURE, LICENSE NUMBER AND SEAL THIS DATE DAY OF MONTH, 2023 .

L-0909

PRELIMINARY NOT FOR RECORDATION CONVEYANCE OR SALES

I, _____ REVIEW OFFICER OF BEAUFORT COUNTY, CERTIFY THAT THE MAP OR PLAT TO WHICH THIS CERTIFICATION IS AFFIXED MEETS ALL STATUTORY REQUIREMENTS FOR RECORDING.

REVIEW OFFICER

DATE

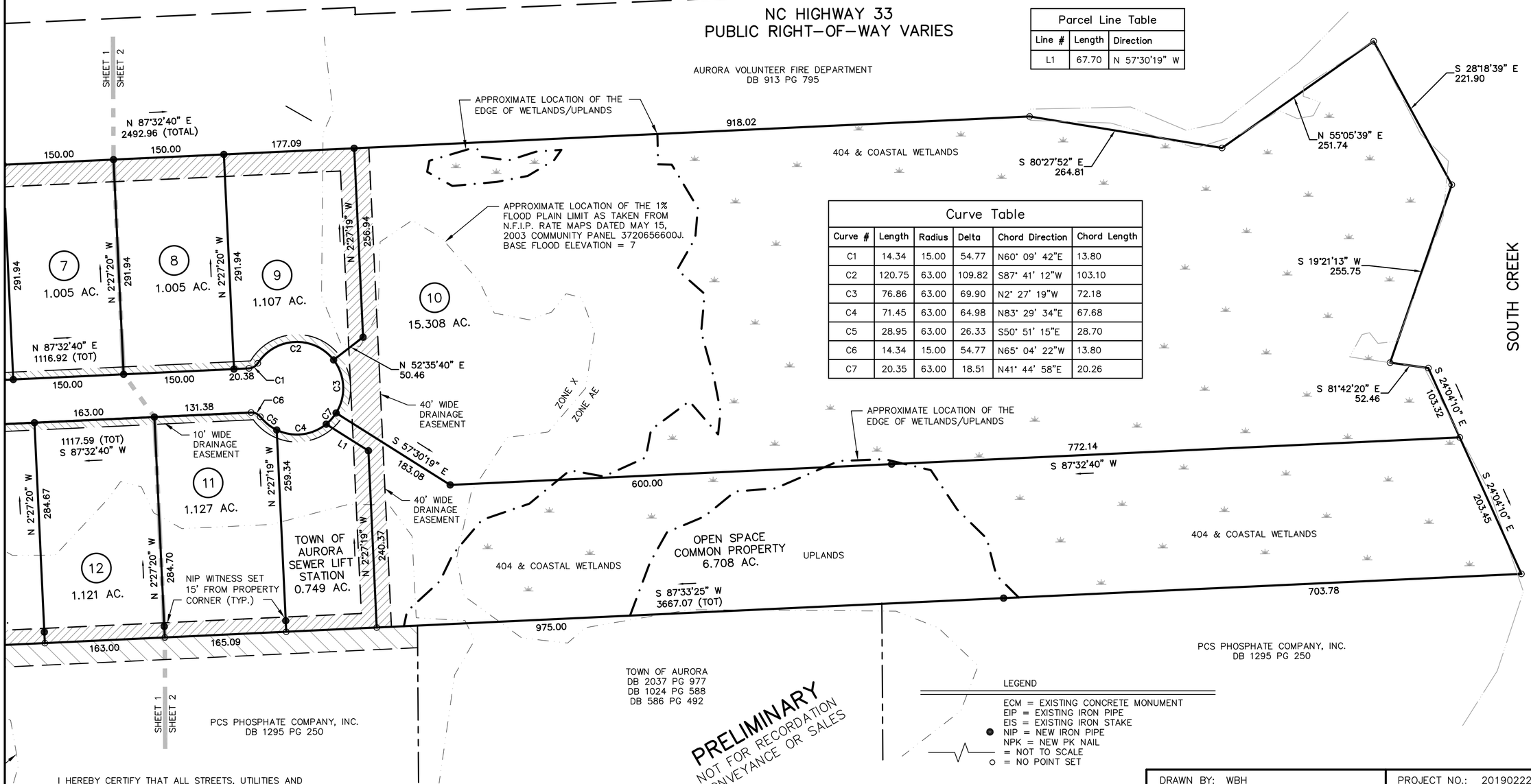

Parcel Line Table		
Line #	Length	Direction
L1	67.70	N 57°30'19" W

Curve Table					
Curve #	Length	Radius	Delta	Chord Direction	Chord Length
C1	14.34	15.00	54.77	N60° 09' 42"E	13.80
C2	120.75	63.00	109.82	S87° 41' 12"W	103.10
C3	76.86	63.00	69.90	N2° 27' 19"W	72.18
C4	71.45	63.00	64.98	N83° 29' 34"E	67.68
C5	28.95	63.00	26.33	S50° 51' 15"E	28.70
C6	14.34	15.00	54.77	N65° 04' 22"W	13.80
C7	20.35	63.00	18.51	N41° 44' 58"E	20.26

LEGEND

ECM = EXISTING CONCRETE MONUMENT
EIP = EXISTING IRON PIPE
EIS = EXISTING IRON STAKE
● NIP = NEW IRON PIPE
NPK = NEW PK NAIL
= NOT TO SCALE
○ = NO POINT SET

PRELIMINARY NOT FOR RECORDATION CONVEYANCE OR SALES

I HEREBY CERTIFY THAT ALL STREETS, UTILITIES AND OTHER REQUIRED IMPROVEMENTS HAVE BEEN INSTALLED IN AN ACCEPTABLE MANNER AND ACCORDING TO TOWN SPECIFICATIONS AND STANDARDS IN THE TOWN OF AURORA INDUSTRIAL PARK SUBDIVISION OR THAT GUARANTEES OF THE INSTALLATION OF THE REQUIRED IMPROVEMENTS IN AN AMOUNT AND MANNER SATISFACTORY TO THE TOWN HAS BEEN RECEIVED, AND THAT THE FILING FEE FOR THIS PLAT, IN THE AMOUNT OF $ _____ HAS BEEN PAID.

TOWN CLERK — DATE

SHEET 2 OF 2
FINAL PLAT
OF THE

TOWN OF AURORA INDUSTRIAL PARK

RICHLAND TOWNSHIP
BEAUFORT COUNTY

DATE
NORTH CAROLINA

GRAPHIC SCALE: 1" = 100'
0 50 100 200

REVISION	DATE	INIT.

DRAWN BY: WBH	PROJECT NO.: 20190222
SURVEYED BY: GDF/JAS	DATE: DATE
SCALE: 1" = 100'	DRAWING NAME: subd–mfr

THE EAST GROUP
324 S. EVANS ST.
GREENVILLE, NC 27834
(252) 758–3746
4325 LAKE BOONE TRAIL SUITE 311
RALEIGH, NC 27607
(919) 784–9330
CORPORATE LICENSE NO. C0206
▪ Engineering ▪ Architecture ▪ Surveying ▪ Technology

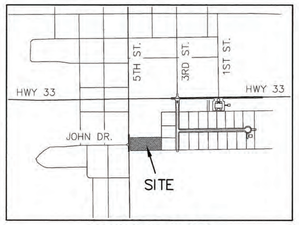

VICINITY MAP
NOT TO SCALE

SHEET INDEX

NOTE:

1. THIS PROPERTY IS LOCATED IN FLOOD ZONE X AND IS SHOWN HEREON AS TAKEN FROM N.F.I.P. RATE MAP DATED 6/19/2020 COMMUNITY PANEL NUMBER 3720654600K AND N.F.I.P. RATE MAP DATED 6/19/2020 COMMUNITY PANEL NUMBER 3720656600K.

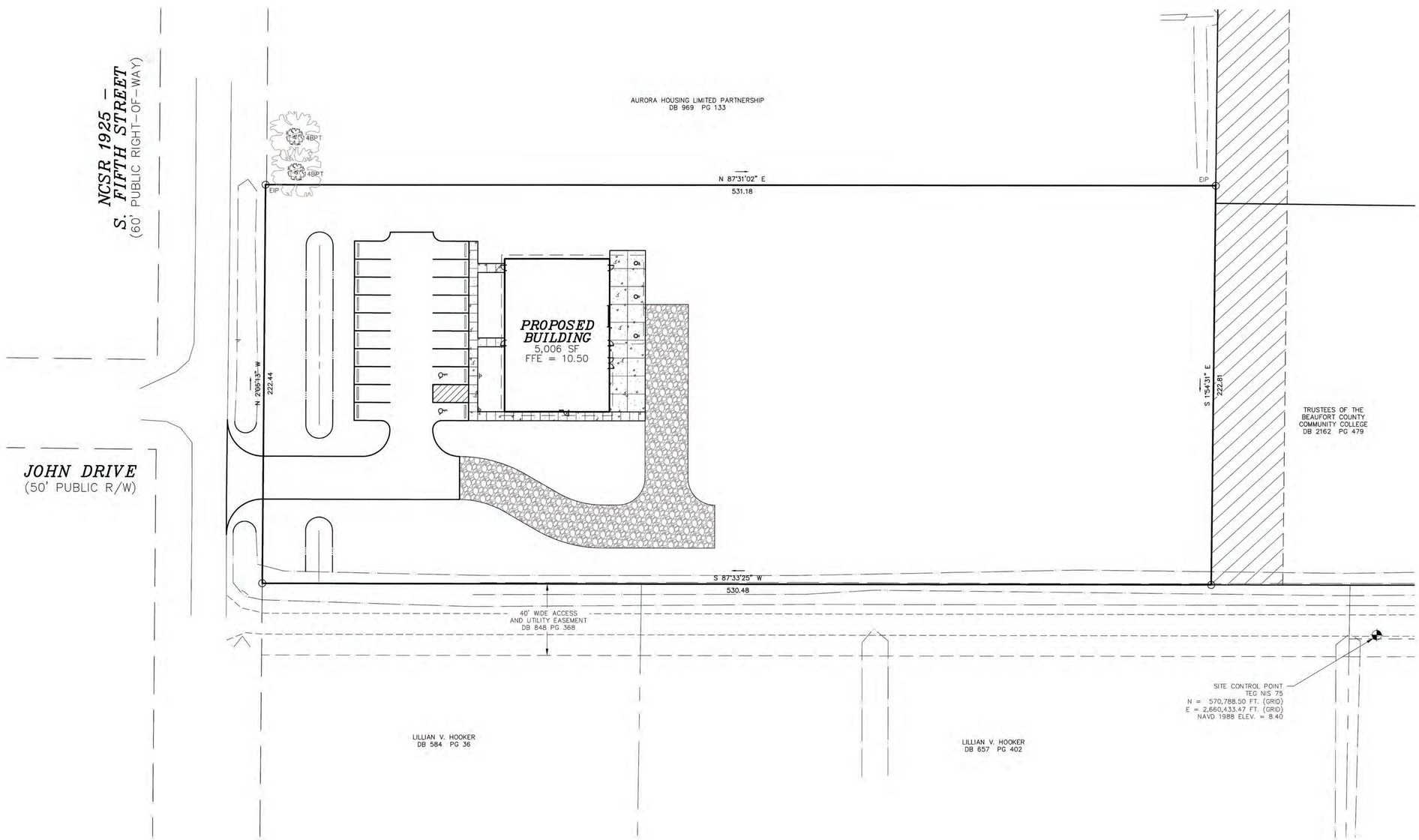

1"=30'-0" 30 15 0 30'

Know what's below. Call before you dig.

MATERIALS KEYING LEGEND

SITE DATA:

TOTAL ACREAGE	2.71 AC.
ZONING	–
PIN No.	6567000970
REID1	49416
OWNER NAME	TRUSTEES OF THE BEAUFORT COUNTY COMMUNITY COLLEGE
OWNER ADDRESS	PO BOX 4808
CITY/ STATE/ ZIP	WASHINGTON, NC 27889
PROPERTY DESC	LOT 19 TOWN OF AURORA INDUSTRIAL PARK
PROPERTY ADDRESS	S. FIFTH STREET
TOWNSHIP	13
DEED BOOK/ PAGE	DB 2162 PG 479
PROPOSED BLDG. FOOTPRINT	5,006 SF
BUILDING HEIGHT	27 FT
BUILDING LOT COVERAGE	0.04%
IMPERVIOUS AREA	
EXISTING	0.00 AC.
PROPOSED	0.56 AC.
% IMPERVIOUS	20.66%
PARKING SPACES	
REGULAR SPACES	17
HC SPACES	2
DISTURBED AREA	1.99 AC.

GENERAL NOTES

THE EAST GROUP, P.A.
•Engineering•Architecture•Surveying•Technology
324 Evans St., Greenville, NC 27858 (252) 758-3746 (252) 830-3954 (Fax)
4325 Lake Boone Trail, Suite 311, Raleigh, NC 27607 (919) 784-9330 (919) 784-9331 (Fax)
• NC Engineering License No. C-0206 • NC Architectural License No. 50213
• NC Landscape Architectural License No. C-427

KEY PLAN

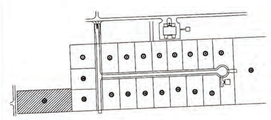

SCO ID #23-27044-01A

NO	REVISION	DATE

SEAL

NORTH CAROLINA PROFESSIONAL SEAL 029422 ENGINEER MICHAEL S. CLEMENTS

Michael S. Clements
Digitally signed by Michael S. Clements
DN: cn=Michael S. Clements, o=The East Group, ou=Engineering, email=mike@teg-pa.com, c=US
2025.01.27 14:13:38 -05'00'

JKF ARCHITECTURE

625 LYNNDALE CT., SUITE F, GREENVILLE, NC 27858 252-355-1068

BEAUFORT COUNTY
COMMUNITY COLLEGE
INDUSTRIAL TRAINING CENTER
AURORA, NC

DRAWING TITLE

COMPOSITE PLAN

SCALE: AS NOTED	DRAWING NO: C1.0
DRAWN: SLJ	
CHECKED: MSC	
DATE: 1-6-2025	
PROJECT NO.: 20240128	

SITE PLAN NOTES:

1. NCDOT DRIVEWAY PERMIT IS REQUIRED FOR THIS PROJECT. ANY ENCROACHMENT AGREEMENTS SHALL BE APPROVED BEFORE INSTALLATION.

2. NCDOT ENCROACHMENT AGREEMENT FOR UTILITIES IS NOT REQUIRED.

3. CONTRACTOR MUST NOTIFY ONE-CALL CENTER, INC. (NC ONE-CALL) (811) AT LEAST 72 HOURS PRIOR TO THE START OF EXCAVATION OR TRENCHING TO HAVE ALL UNDERGROUND UTILITIES LOCATED.

4. ALL REQUIRED IMPROVEMENTS SHALL CONFORM TO THE TOWN OF AURORA/ BEAUFORT COUNTY MANUAL OF STANDARD DESIGNS AND DETAILS (MSDD).

5. SITE SHALL MEET ALL RELATED ACCESSIBILITY REQUIREMENTS.

6. THIS PROJECT DISTURBS GREATER THAN 1 ACRE OF LAND. A SOIL EROSION AND SEDIMENTATION CONTROL PLAN IS REQUIRED.

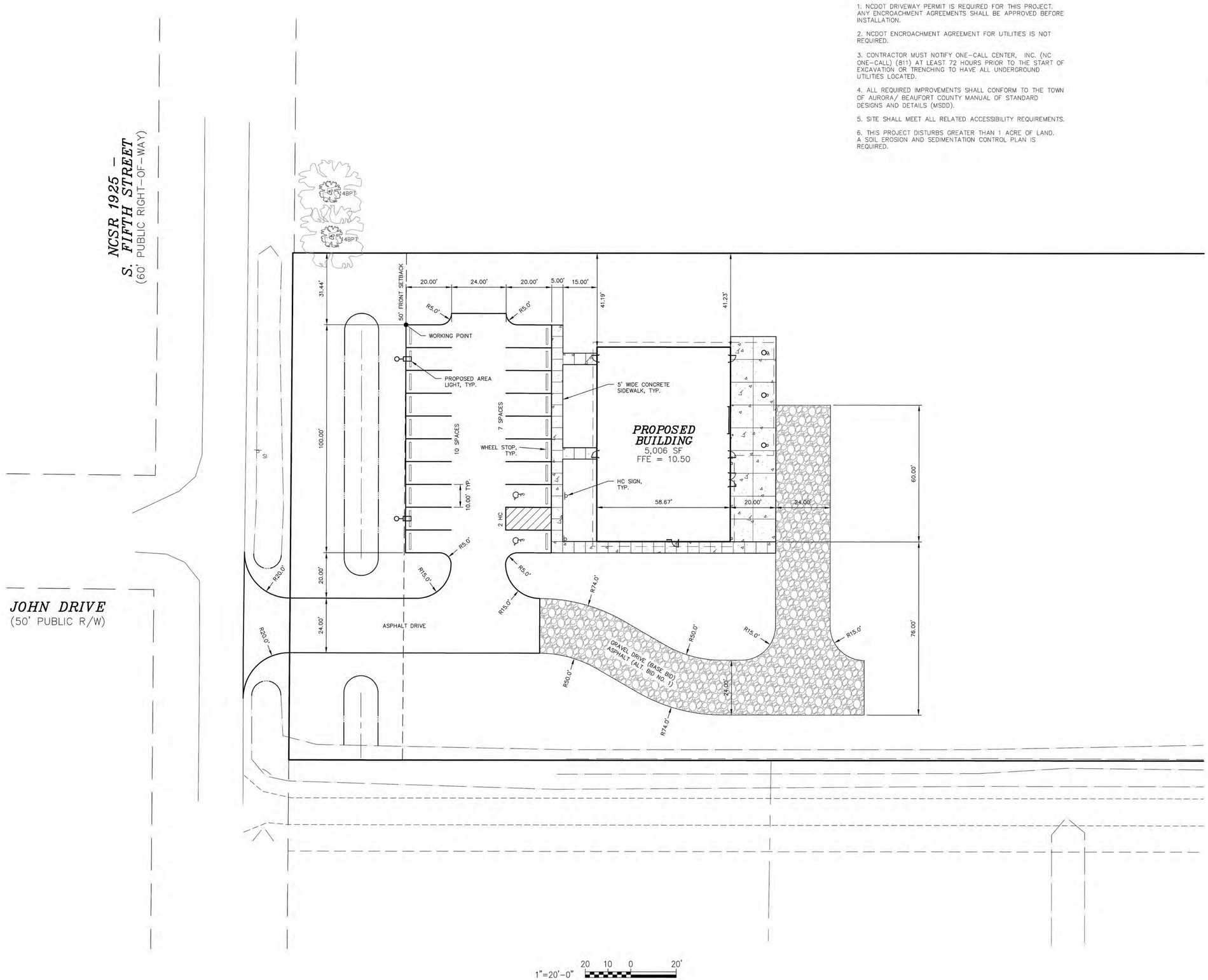

MATERIALS KEYING LEGEND

LEGEND

FFE = FINISH FLOOR ELEVATION
HC = HANDICAP
R = RADIUS
SF = SQUARE FOOTAGE
SI = SIGN

GENERAL NOTES

THE EAST GROUP, P.A.
•Engineering•Architecture•Surveying•Technology
324 Evans St., Greenville, NC 27858 (252) 758-3746 (252) 830-3954 (Fax)
4325 Lake Boone Trail, Suite 311, Raleigh, NC 27607 (919) 784-9330 (919) 784-9331 (Fax)
■ NC Engineering License No. C-0206 ■ NC Architectural License No. 50213
■ NC Landscape Architectural License No. C-427

KEY PLAN

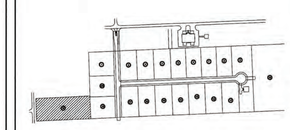

SCO ID #23-27044-01A

NO	REVISION	DATE

SEAL

NORTH CAROLINA PROFESSIONAL SEAL 029422 ENGINEER MICHAEL S. CLEMENTS

Michael S. Clements
Digitally signed by Michael S. Clements
DN: cn=Michael S. Clements, o=The East Group, ou=Engineering, c=US, email=mike@teg-pa.com
2025.01.27 08:40:25 -05'00'

JKF ARCHITECTURE
625 LYNNDALE CT., SUITE F, GREENVILLE, NC 27858 252-355-1068

BEAUFORT COUNTY
COMMUNITY COLLEGE
INDUSTRIAL TRAINING CENTER
AURORA, NC

DRAWING TITLE

SITE PLAN

SCALE: AS NOTED	DRAWING NO: C1.1
DRAWN: SLJ	
CHECKED: MSC	
DATE: 1-6-2025	
PROJECT NO.: 20240128	

GRADING NOTES:

1. ALL VEGETATION AND TOPSOIL SHALL BE STRIPPED FROM FILL AREAS PRIOR TO PLACING FILL. ANY QUESTIONABLE OR UNSUITABLE SOIL CONDITIONS SHALL BE BROUGHT TO THE ATTENTION OF THE ENGINEER.
2. AFTER STRIPPING TOPSOIL AND PRIOR TO PLACING FILL, IT IS RECOMMENDED THAT ALL BUILDING, PARKING AND DRIVEWAY AREAS BE ROLLED WITH A VIBRATORY ROLLER TO CONSOLIDATE LOOSE SOILS IN THE UPPER SUBGRADE. COMPACTION TEST RESULTS OF AT LEAST 95 PERCENT OF THE STANDARD PROCTOR MAXIMUM DRY DENSITY WILL BE REQUIRED PRIOR TO ENGINEER'S APPROVAL FOR FILL PLACEMENT. CONTRACTOR SHALL CONTACT THE ENGINEER AND SCHEDULE A PROOF ROLL FOR SUBGRADE AND WHEN AGGREGATE BASE COURSE HAS BEEN INSTALLED.
3. ALL FILL SHALL BE COMPACTED TO AT LEAST 95% OF THE STANDARD PROCTOR MAXIMUM DRY DENSITY (ASTM D698).
4. ALL CULVERT CLEANOUT MUST BE DONE SUCH THAT THE SEDIMENT IS EITHER EXTRACTED OR BLOWN UPSTREAM FOR CLEANUP. UNDER NO CIRCUMSTANCES SHALL SEDIMENT BE BLOWN DOWNSTREAM.
5. GRADING CONTRACTOR SHALL TEMPORARY SEED AND MULCH ALL DISTURBED AREAS IN ACCORDANCE WITH THE SPECIFICATIONS WITHIN 14 DAYS OF COMPLETION OF GRADING WORK. UPON COMPLETION OF THE PROJECT, THE GENERAL CONTRACTOR SHALL INSTALL PERMANENT SEEDING AS OUTLINED IN THE SPECIFICATIONS. ALL DRAINAGE PIPES SHALL BE CLEANED BY THE GENERAL CONTRACTOR TO REMOVE ANY SEDIMENTS THAT HAVE ACCUMULATED.
6. ALL EXCESS TOPSOIL STRIP MATERIAL TO BE HAULED OFF-SITE AND DISPOSED OF AT AN APPROVED SITE.
7. ALL PLANTING AREAS SHALL BE BACKFILLED WITH TOPSOIL AND RAKED DOWN, REMOVING ALL CLODS AND ROOTS, AND LEFT READY FOR SEEDING AND PLANTING.

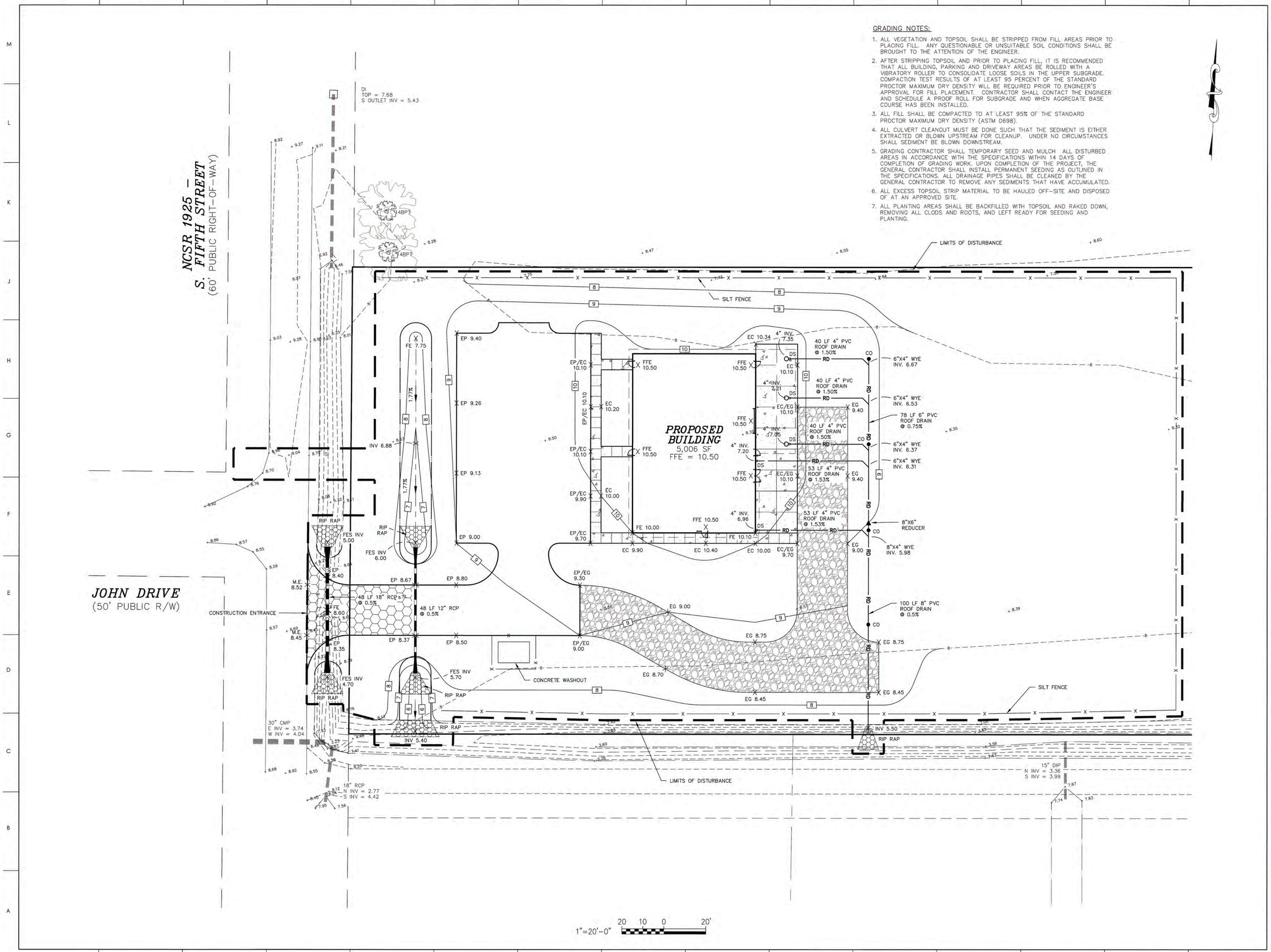

MATERIALS KEYING LEGEND

LEGEND

CMP = CORRUGATED METAL PIPE
CO = CLEAN OUT
EC = EDGE OF CONCRETE
EG = EDGE OF GRAVEL
EP = EDGE OF PAVEMENT
EX. = EXISTING
FE = FINISHED ELEVATION
FES = FLARED END SECTION
FFE = FINISH FLOOR ELEVATION
INV. = INVERT
LF = LINEAR FEET
M.E. = MATCH EXISTING
RCP = REINFORCED CONCRETE PIPE
x 8.00 — EX. SPOT ELEVATION
8 — EXISTING CONTOUR
EX. STORM DRAIN
PROPOSED STORM DRAIN
9 — PROPOSED CONTOUR
RD — PROPOSED ROOF DRAIN
x — SILT FENCE

GENERAL NOTES

THE EAST GROUP, P.A.
•Engineering•Architecture•Surveying•Technology
324 Evans St., Greenville, NC 27858 (252) 758-3746 (252) 830-3954 (Fax)
4325 Lake Boone Trail, Suite 311, Raleigh, NC 27607 (919) 784-9330 (919) 784-9331 (Fax)
• NC Engineering License No. C-0206 • NC Architectural License No. 50213
• NC Landscape Architectural License No. C-427

KEY PLAN

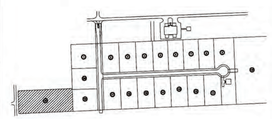

SCO ID #23-27044-01A

NO	REVISION	DATE

SEAL

NORTH CAROLINA PROFESSIONAL SEAL 029422 ENGINEER MICHAEL S. CLEMENTS

Michael S. Clements (PE)

Digitally signed by Michael S. Clements
DN: cn=Michael S. Clements, c=US, o=THE EAST GROUP, PA, ou=Engineering, email=mike@eastgroupnc.com
2025.01.27 09:34:13 -05'00'

JKF ARCHITECTURE

625 LYNNDALE CT., SUITE F, GREENVILLE NC 27858 252-355-1068

BEAUFORT COUNTY
COMMUNITY COLLEGE
INDUSTRIAL TRAINING CENTER
AURORA, NC

DRAWING TITLE

GRADING PLAN

SCALE: AS NOTED	DRAWING NO: C2.1
DRAWN: SLJ	
CHECKED: MSC	
DATE: 1-6-2025	
PROJECT NO.: 20240128	

UTILITY NOTES:

1. ALL SEWER AND WATER MAIN CONSTRUCTION SHALL BE DONE IN ACCORDANCE WITH ALL APPLICABLE STATE AND LOCAL CODES.
2. LOCATIONS OF EXISTING UTILITIES AS SHOWN ARE APPROXIMATE. CONTRACTOR SHALL FIELD VERIFY LOCATIONS AND COORDINATE CONNECTION WITH PROPER AUTHORITIES. CALL NC ONE-CALL CENTER, INC. AT 811 72 HOURS BEFORE ANY EXCAVATION IS BEGUN.
3. AS OF JAN. 1, 1986, ANYONE DIGGING WITH MECHANIZED EQUIPMENT IN HIGHWAY RIGHT-OF-WAY, PRIVATE UTILITY EASEMENTS, OR PUBLIC SPACES WILL BE REQUIRED BY NORTH CAROLINA LAW TO GIVE NOTICE OF THE PROPOSED EXCAVATION TO ALL EXISTING AREA UTILITIES AT LEAST 3 WORKING DAYS BEFORE STARTING TO DIG. THE UTILITY OWNER IS TO LOCATE ITS FACILITIES IN THE AREA OF THE PROPOSED EXCAVATION. UTILITY MEMBERS OF NC ONECALL CAN BE CONTACTED AT 811.
4. CONTRACTOR SHALL NOTIFY UTILITIES ENGINEER 72 HOURS PRIOR TO THE BEGINNING OF CONSTRUCTION. CONTRACTOR TO COORDINATE ALL EXISTING UTILITY TIE INS WITH THE UTILITY ENGINEER.
5. WATER MAINS SHALL BE BURIED A DEPTH OF 36 INCHES UNLESS NOTED OTHERWISE.
6. CONTRACTOR SHALL MAINTAIN COMPREHENSIVE (DEPTH AND HORIZONTAL LOCATIONS) FIELD "AS-BUILTS" FOR ALL INSTALLATIONS AND SUBMIT TO THE ENGINEER.
7. ALL PERMITS AND FEES REQUIRED FOR CONSTRUCTION OF IMPROVEMENTS ARE THE RESPONSIBILITY OF THE GENERAL CONTRACTOR.
8. TRACER WIRE AND DETECTABLE TAPE SHALL BE PROVIDED FOR ALL SEWER AND WATER SERVICE PIPING. THE TRACER WIRE SHALL BE ATTACHED TO THE PIPING AND SHALL TERMINATE AT THE CLEAN OUT OR THE VALVE BOX OF THE UTILITY. THE TRACER WIRE SIZE SHALL BE NOT LESS THAN 14 AWG AND SHALL BE DIRECT BURY TYPE.

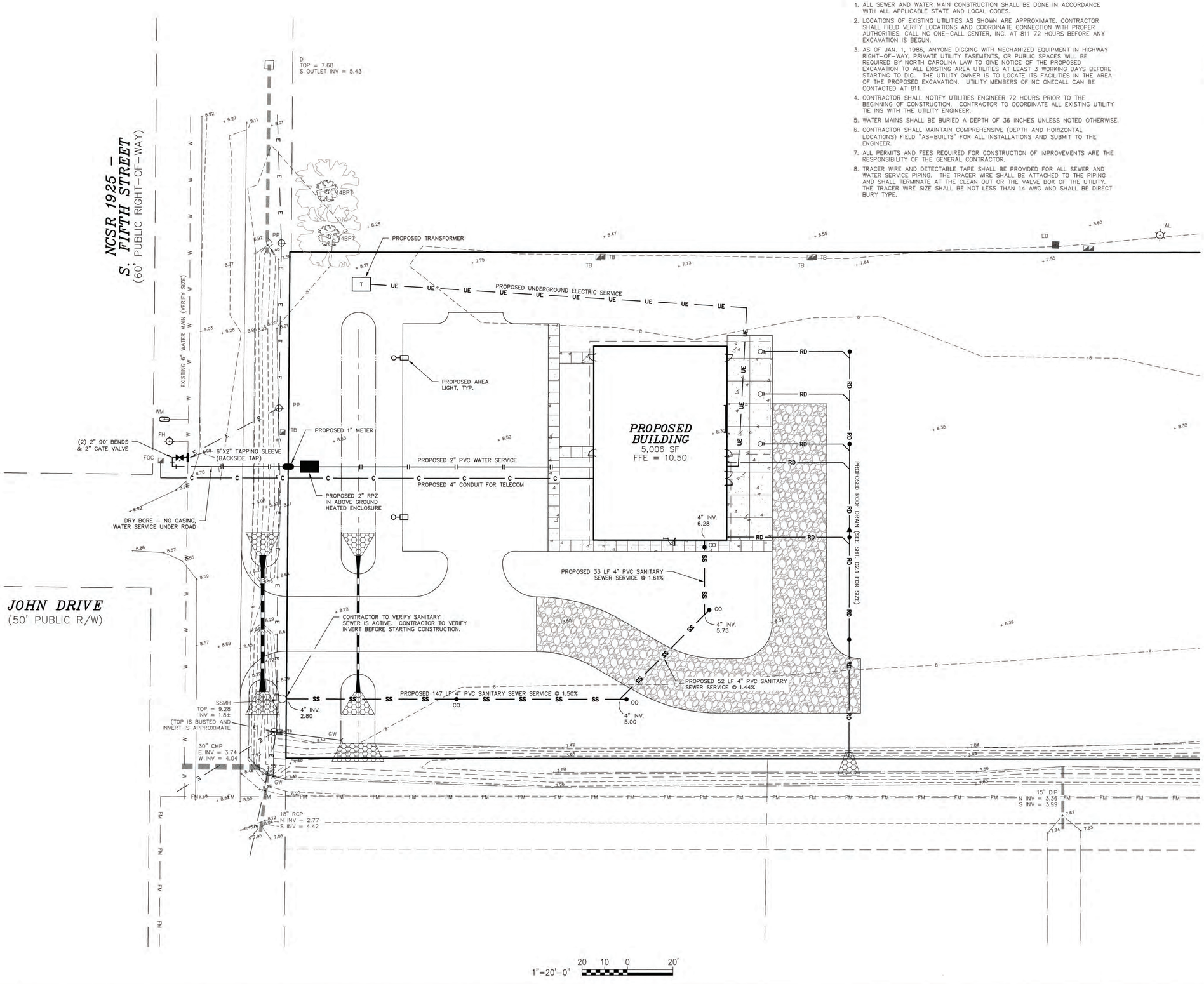

MATERIALS KEYING LEGEND

LEGEND

	CMP = CORRUGATED METAL PIPE
	CO = CLEAN OUT
	EX. = EXISTING
	FFE = FINISH FLOOR ELEVATION
	FH = FIRE HYDRANT
	FOC = FIBER OPTIC CABLE
	GW = GUY WIRE
	INV. = INVERT
	LF = LINEAR FEET
	PP = POWER POLE
	RCP = REINFORCED CONCRETE PIPE
	SSMH = SANITARY SEWER MANHOLE
	TB = TELEPHONE BOX
	WM = WATER METER
x 8.00	EX. SPOT ELEVATION
8	EXISTING CONTOUR
	EX. STORM DRAIN
	PROPOSED STORM DRAIN
RD	PROPOSED ROOF DRAIN
W	EX. WATER MAIN
	PROPOSED WATER MAIN
FM	EX. FORCE MAIN
SS	PROPOSED SANITARY SEWER SERVICE
E	EX. OVERHEAD ELECTRIC
UE	PROPOSED UNDERGROUND ELECTRIC
C	PROPOSED CONDUIT

GENERAL NOTES

THE EAST GROUP, P.A.
▪Engineering▪Architecture▪Surveying▪Technology
324 Evans St., Greenville, NC 27858 (252) 758-3746 (252) 830-3954 (Fax)
4325 Lake Boone Trail, Suite 311, Raleigh, NC 27607 (919) 784-9330 (919) 784-9331 (Fax)
▪NC Engineering License No. C-0206 ▪NC Architectural License No. 50213
▪NC Landscape Architectural License No. C-427

KEY PLAN

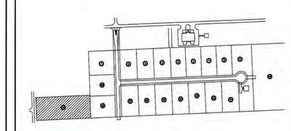

SCO ID #23-27044-01A

NO	REVISION	DATE

SEAL

NORTH CAROLINA PROFESSIONAL SEAL 029422 ENGINEER Michael S. Clements

Digitally signed by Michael S. Clements DN: cn=Michael S. Clements, c=US, o=JKF Architecture PC, ou=Engineering, email=mike@jkfarch.com 2025.01.27 09:33:33 -05'00'

JKF ARCHITECTURE

625 LYNNDALE CT., SUITE F, GREENVILLE NC 27858 252-355-1068

BEAUFORT COUNTY COMMUNITY COLLEGE INDUSTRIAL TRAINING CENTER
AURORA, NC

DRAWING TITLE: UTILITY PLAN

SCALE: AS NOTED	DRAWING NO: C3.1
DRAWN: SLJ	
CHECKED: MSC	
DATE: 1-6-2025	
PROJECT NO.: 20240128	

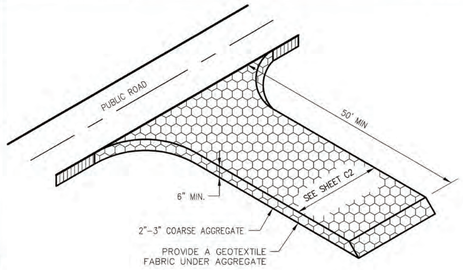

1 C4.1 CONSTRUCTION ENTRANCE DETAIL
N.T.S.

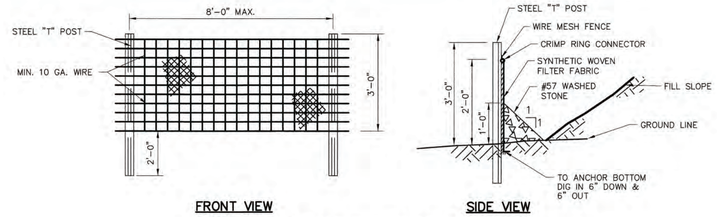

2 C4.1 SILT FENCE DETAIL
N.T.S.

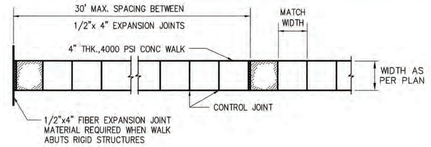

3 C4.1 SIDEWALK DETAIL
N.T.S.

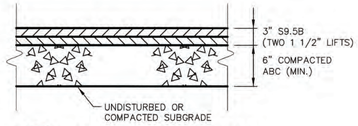

4 C4.1 ASPHALT PAVEMENT SECTION
N.T.S.

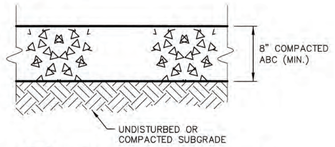

5 C4.1 TYPICAL NEW GRAVEL SECTION
N.T.S.

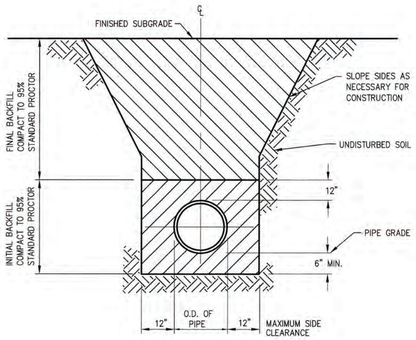

6 C4.1 STORM DRAIN TRENCH DETAIL
N.T.S.

RIP RAP OUTLET TABLE

PIPE SIZE	WIDTH 1	LENGTH	WIDTH 2
12"	15'	10'	3'
15"	15'	10'	4'
18"	15'	10'	5'
24"	17'	12'	6'
30"	24'	15'	8'
36"	26'	15'	9'

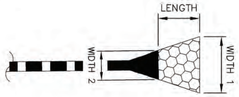

NOTE:
1. RIP RAP SHOULD EXTEND TO OPPOSITE WALL OF DITCH WHEN THE PIPE ENTERS PERPENDICULAR TO THE DITCH.
2. CLASS B RIP RAP (9" MIN.)

7 C4.1 RIP RAP OUTLET PROTECTION
N.T.S.

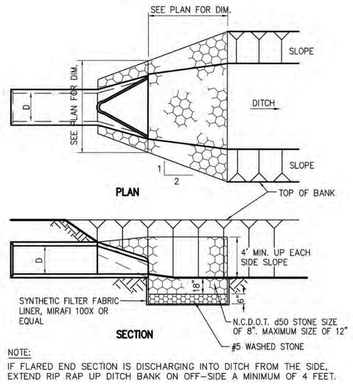

NOTE:
IF FLARED END SECTION IS DISCHARGING INTO DITCH FROM THE SIDE, EXTEND RIP RAP UP DITCH BANK ON OFF-SIDE A MINIMUM OF 4 FEET.

8 C4.1 FLARED END SECT. INLET/OUTLET PROTECTION
N.T.S.

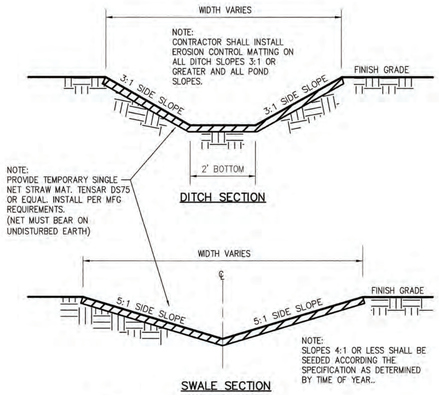

9 C4.1 TYPICAL DITCH/ SWALE SECTIONS
N.T.S.

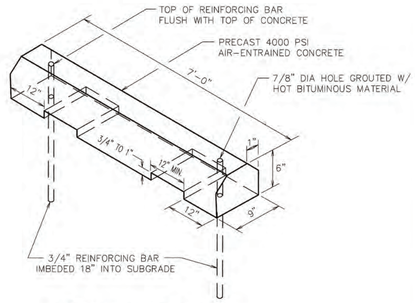

10 C4.1 WHEEL STOP DETAIL
N.T.S.

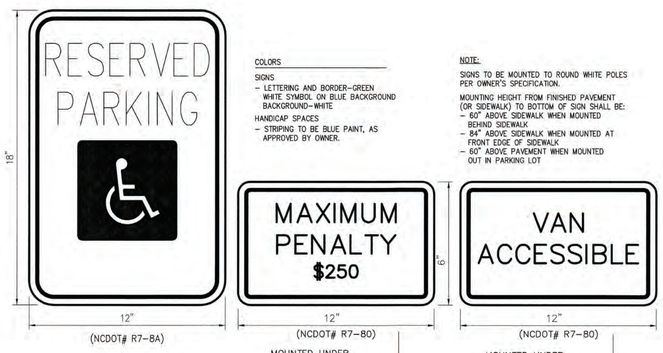

COLORS
SIGNS
- LETTERING AND BORDER-GREEN
WHITE SYMBOL ON BLUE BACKGROUND
BACKGROUND-WHITE
HANDICAP SPACES
- STRIPING TO BE BLUE PAINT, AS APPROVED BY OWNER.

NOTE:
SIGNS TO BE MOUNTED TO ROUND WHITE POLES PER OWNER'S SPECIFICATION.
MOUNTING HEIGHT FROM FINISHED PAVEMENT (OR SIDEWALK) TO BOTTOM OF SIGN SHALL BE:
- 60" ABOVE SIDEWALK WHEN MOUNTED BEHIND SIDEWALK
- 84" ABOVE SIDEWALK WHEN MOUNTED AT FRONT EDGE OF SIDEWALK
- 60" ABOVE PAVEMENT WHEN MOUNTED OUT IN PARKING LOT

NOTE:
SEE SITE PLAN C1.1 FOR LOCATION OF VAN ACCESSIBLE SIGNS

(AT DESIGNATED LOCATIONS)

11 C4.1 HANDICAP SIGN DETAIL
N.T.S.

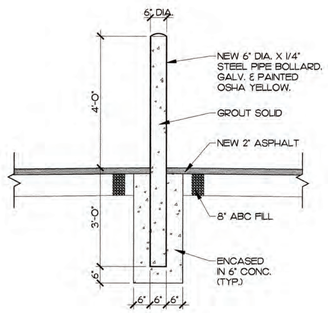

12 C4.1 BOLLARD DETAIL
N.T.S.

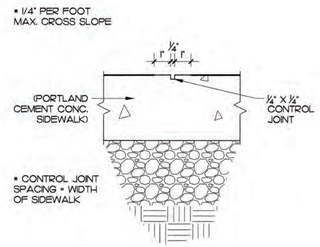

13 C4.1 CONTROL JOINT DETAIL
N.T.S.

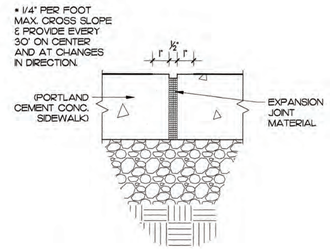

14 C4.1 EXPANSION JOINT DETAIL
N.T.S.

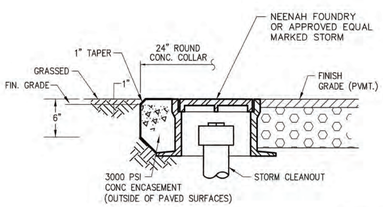

NOTE:
CLEAN OUT SHALL BE PROTECTED BY A CAST IRON VALVE BOX MARKED "STORM" (PLUG SHALL BE BRASS W/BRASS COUPLING ASSY.)

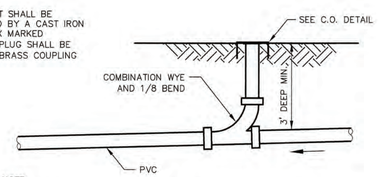

NOTE:
STORM TRENCH SHALL BE COMPACTED TO 95% STANDARD PROCTOR.

15 C4.1 ROOF DRAIN DETAIL
N.T.S.

MATERIALS KEYING LEGEND

GENERAL NOTES

THE EAST GROUP, P.A.
•Engineering•Architecture•Surveying•Technology
324 Evans St., Greenville, NC 27858 (252) 758-3746 (252) 830-3954 (Fax)
•4325 Lake Boone Trail, Suite 311, Raleigh, NC 27607 (919) 784-9330 (919) 784-9331 (Fax)
• NC Engineering License No. C-0208 • NC Architectural License No. 50213
• NC Landscape Architectural License No. C-427

KEY PLAN

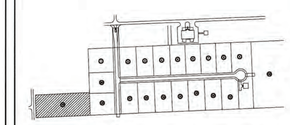

SCO ID #23-27044-01A

NO	REVISION	DATE

SEAL
NORTH CAROLINA PROFESSIONAL SEAL 029422 ENGINEER MICHAEL S. CLEMENTS
Michael S. Clements, P.E.
Digitally signed by Michael S. Clements
DN: cn=Michael S. Clements, c=US, o=The East Group, P.A., ou=Engineering, email=mike@eastpa.com
Date: 2025.01.27 09:37:50 -05'00'

JKF ARCHITECTURE
625 LYNNDALE CT., SUITE F, GREENVILLE, NC 27858 252-355-1068

BEAUFORT COUNTY COMMUNITY COLLEGE INDUSTRIAL TRAINING CENTER
AURORA, NC

DRAWING TITLE
DETAILS

SCALE: AS NOTED	DRAWING NO: C4.1
DRAWN: SLJ	
CHECKED: MSC	
DATE: 1-6-2025	
PROJECT NO.: 20240128	

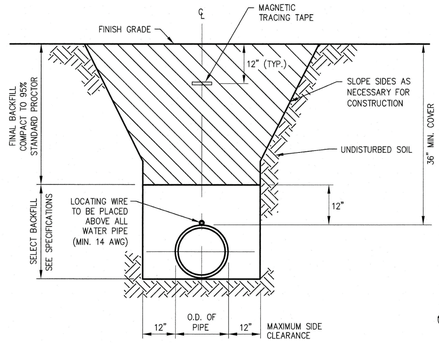

1 C5.1 WATER PIPE TRENCH DETAIL
N.T.S.

NOTE:
ELECTRICAL CONTRACTOR TO SUPPLY POWER FOR HEATER.

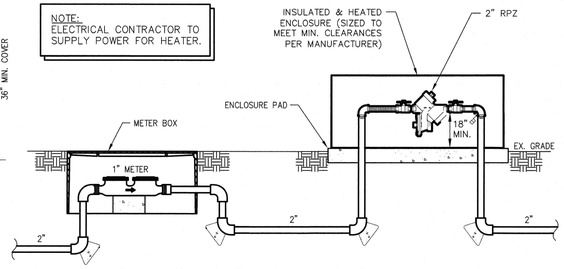

2 C5.1 WATER SERVICE DETAIL
N.T.S.

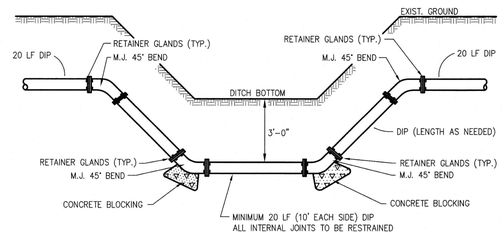

NOTE:
PLACE CONC. BLOCKING SUCH THAT IT WILL NOT INTERFERE WITH REMOVAL OF BOLTS.

3 C5.1 WATER MAIN – DITCH CROSSING
N.T.S.

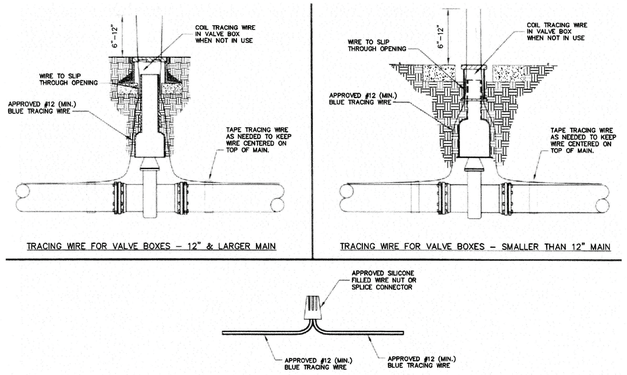

TRACING WIRE FOR VALVE BOXES – 12" & LARGER MAIN

TRACING WIRE FOR VALVE BOXES – SMALLER THAN 12" MAIN

SPLICING OF TRACING WIRES

4 C5.1 TRACING WIRE INSTALLATION
N.T.S.

VALVE BOX TO BE SUPPORTED BY TWO BRICKS

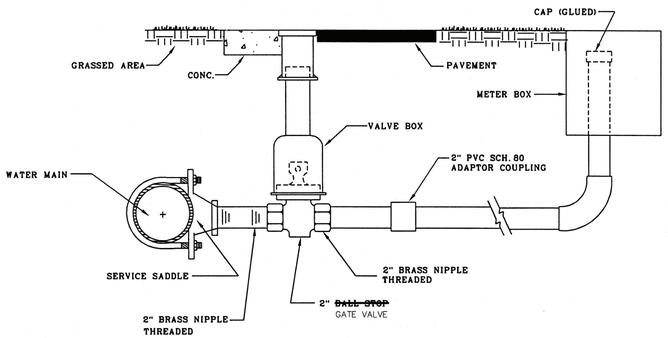

5 C5.1 TYP. WATER SERVICE CONNECTION DETAIL
N.T.S.

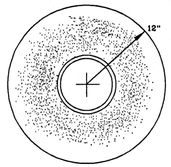

DETAIL

PRECAST CONCRETE COLLAR

NOTE:
VALVE BOX SHALL NOT BE INSTALLED IN CURB AND GUTTER.
VALVE BOX SHALL BE IN ACCORDANCE WITH MANUAL.
VALVE BOX SHALL BE CENTERED AND PLUMBED OVER VALVE.

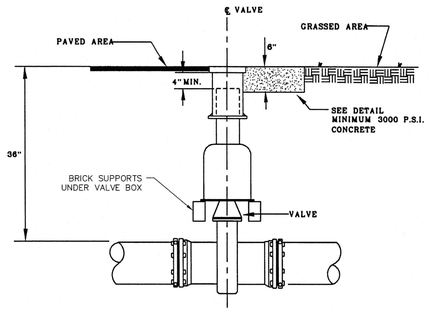

6 C5.1 VALVE BOX DETAIL
N.T.S.

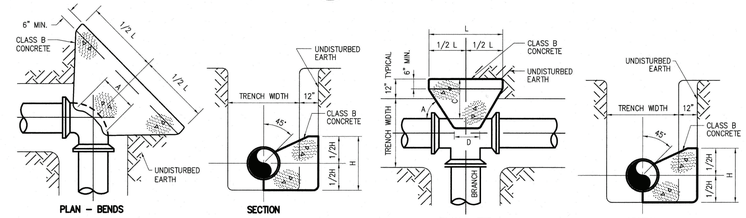

PLAN – BENDS

SECTION

PLAN – TEE

SECTION

BUTTRESS DIMENSIONS						
PIPE SIZE	22 1/2 BENDS		45 BENDS		90 BENDS	
	L	H	L	H	L	H
<4"	1'-0"	1'-0"	1'-0"	1'-0"	1'-0"	1'-0"
4"	1'-0"	1'-0"	1'-0"	1'-0"	1'-6"	1'-6"
6"	1'-6"	1'-6"	1'-6"	1'-6"	2'-0"	2'-0"
8"	2'-0"	2'-0"	2'-0"	2'-0"	3'-0"	2'-0"
12"	2'-0"	2'-0"	3'-0"	2'-6"	4'-6"	3'-0"

NOTES:
1. DIMENSION "A" SHOULD BE AS LARGE AS POSSIBLE WITHOUT INTERFERRING WITH THE MECH. JOINT BOLTS.
2. THE SHAPE OF THE BACK OF THE BUTTRESS MAY VARY AS LONG AS THE CONCRETE IS AGAINST FIRM, UNDISTURBED EARTH.
3. BUTTRESS DIMENSIONS ARE BASED UPON A SOIL RESISTANCE OF 2000 LBS. PER SQ. FT. AND A WATER PRESSURE OF 150 P.S.I.

BUTTRESS DIMENSIONS				
B. D.	L	H	C	D
<4"	1'-0"	1'-0"	SEE NOTE NO. 1	SEE NOTE NO. 2
4"	1'-6"	1'-6"		
6"	2'-0"	2'-0"		
8"	3'-0"	2'-0"		
12"	4'-6"	3'-0"		

B. D. = BRANCH DIAMETER

NOTES:
1. DIMENSION "C" SHOULD BE LARGE ENOUGH TO MAKE ANGLE "A" EQUAL TO OR GREATER THAN 45°.
2. DIMENSION "D" SHOULD BE AS LARGE AS POSSIBLE WITHOUT INTERFERRING WITH THE MECHANICAL JOINTS.
3. BUTTRESS DIMENSIONS ARE BASED UPON A SOIL RESISTANCE OF 2000 LBS. PER SQ. FT. AND A WATER PRESSURE OF 150 P.S.I.

7 C5.1 THRUST BLOCKING DETAIL
N.T.S.

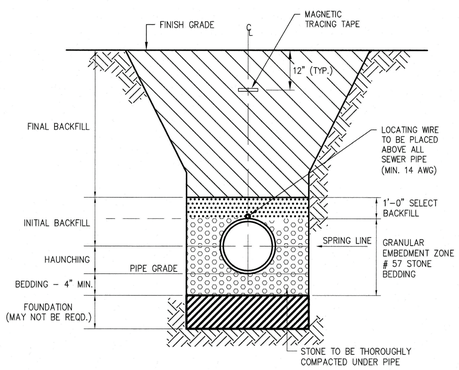

PVC. SAN. SEWER PIPE

NOTE:
INSTALLATION OF SDR 35 PVC SHALL BE IN ACCORDANCE WITH THE LATEST REVISION OF ASTM D2321.

8 C5.1 SEWER TRENCH DETAIL
N.T.S.

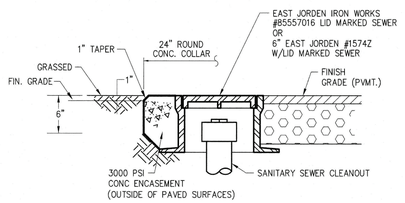

NOTE:
CLEAN OUT SHALL BE PROTECTED BY A CAST IRON VALVE BOX MARKED "SEWER" (PLUG SHALL BE BRASS W/BRASS COUPLING ASSY.)

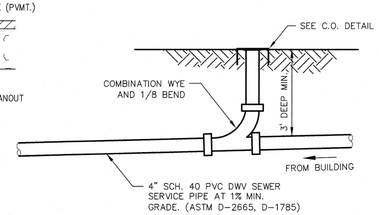

NOTE:
SEWER SERVICE TRENCH SHALL BE COMPACTED TO 95% STANDARD PROCTOR.

9 C5.1 SANITARY SEWER SERVICE DETAIL
N.T.S.

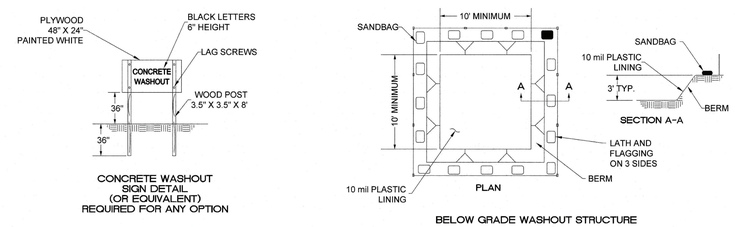

CONCRETE WASHOUT SIGN DETAIL (OR EQUIVALENT) REQUIRED FOR ANY OPTION

BELOW GRADE WASHOUT STRUCTURE

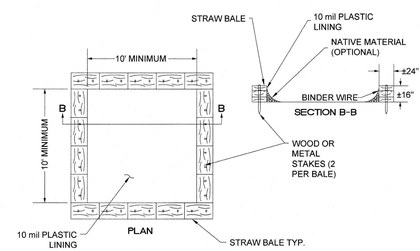

ABOVE GRADE WITH STRAW BALES

NOTES:
1. ACTUAL LAYOUT TO BE DETERMINED IN THE FIELD BUT NOT WITHIN 50FT OF A PROPOSED/ EXISTING CATCH BASIN AND/ OR INLETS, TOP OF BANK OF PERENNIAL STREAM, SURFACE WATER BODY, OR WETLAND.
2. A CONCRETE WASHOUT SIGN SHALL BE INSTALLED IN CLOSE PROXIMITY OF THE AREA AND SHALL BE CLEARLY VISIBLE.
3. GEOMEMBRANE BASIN LINER SHALL CONSIST OF A POLYPROPLENE OR POLYETHYLENE 10 MIL THICK GEOMEMBRANE.
4. HOLES, DEPRESSIONS OR OTHER GROUND DISTURBANCE CAUSED BY THE REMOVAL OF THE TEMPORARY CONCRETE WASHOUT FACILITIES SHALL BE BACKFILLED, REPAIRED, AND STABILIZED TO PREVENT EROSION.

MAINTENANCE:
1. MAINTAIN WASHOUT STRUCTURE TO PROVIDE ADEQUATE CAPACITY PLUS A MINIMUM OF 12 INCHES. REMOVE AND DISPOSE HARDENED CONCRETE AND RETURN THE STRUCTURE TO A FUNCTIONAL CONDITION AFTER REACHING 75% CAPACITY.
2. INSPECT WASHOUT STRUCTURE FOR DAMAGE AND MAINTAIN FOR EFFECTIVENESS WEEKELY.
3. REMOVE CONCRETE STRUCTURE AND SIGN ON PROJECT COMPLETION, DISPOSE CONCRETE IN APPROVED LANDFILL SITE OR RECYCLE.
4. GRADE THE EARTH MATERIAL TO MATCH EXISTING CONTOURS AND SEED ACCORDINGLY TO PLANT SCHEDULE. MULCH AREA ACCORDINGLY.

10 C5.1 CONCRETE WASHOUT DETAIL
N.T.S.

MATERIALS KEYING LEGEND

GENERAL NOTES

THE EAST GROUP, P.A.
•Engineering•Architecture•Surveying•Technology
324 Evans St., Greenville, NC 27858 (252) 758-3746 (252) 830-3954 (Fax)
4325 Lake Boone Trail, Suite 311, Raleigh, NC 27607 (919) 784-9330 (919) 784-9331 (Fax)
■ NC Engineering License No. C-0206 ■ NC Architectural License No. 50213
■ NC Landscape Architectural License No. C-427

KEY PLAN

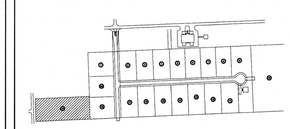

SCO ID #23-27044-01A

NO	REVISION	DATE

SEAL
NORTH CAROLINA PROFESSIONAL SEAL 029422 ENGINEER
Michelle S. Clements
Digitally signed by Michelle S. Clements
2025.01.27 09:39:08 -05'00'

JKF ARCHITECTURE

625 LYNNDALE CT., SUITE F, GREENVILLE, NC 27858 252-355-1068

BEAUFORT COUNTY COMMUNITY COLLEGE INDUSTRIAL TRAINING CENTER
AURORA, NC

DRAWING TITLE
DETAILS

SCALE: AS NOTED	DRAWING NO: C5.1
DRAWN: SLJ	
CHECKED: MSC	
DATE: 1-6-2025	
PROJECT NO.: 20240128	

GROUND STABILIZATION AND MATERIALS HANDLING PRACTICES FOR COMPLIANCE WITH THE NCG01 CONSTRUCTION GENERAL PERMIT

Implementing the details and specifications on this plan sheet will result in the construction activity being considered compliant with the Ground Stabilization and Materials Handling sections of the NCG01 Construction General Permit (Sections E and F, respectively). The permittee shall comply with the Erosion and Sediment Control plan approved by the delegated authority having jurisdiction. All details and specifications shown on this sheet may not apply depending on site conditions and the delegated authority having jurisdiction.

SECTION E: GROUND STABILIZATION

Required Ground Stabilization Timeframes		
Site Area Description	**Stabilize within this many calendar days after ceasing land disturbance**	**Timeframe variations**
(a) Perimeter dikes, swales, ditches, and perimeter slopes	7	None
(b) High Quality Water (HQW) Zones	7	None
(c) Slopes steeper than 3:1	7	If slopes are 10' or less in length and are not steeper than 2:1, 14 days are allowed
(d) Slopes 3:1 to 4:1	14	-7 days for slopes greater than 50' in length and with slopes steeper than 4:1 -7 days for perimeter dikes, swales, ditches, perimeter slopes and HQW Zones -10 days for Falls Lake Watershed
(e) Areas with slopes flatter than 4:1	14	-7 days for perimeter dikes, swales, ditches, perimeter slopes and HQW Zones -10 days for Falls Lake Watershed unless there is zero slope

Note: After the permanent cessation of construction activities, any areas with temporary ground stabilization shall be converted to permanent ground stabilization as soon as practicable but in no case longer than 90 calendar days after the last land disturbing activity. Temporary ground stabilization shall be maintained in a manner to render the surface stable against accelerated erosion until permanent ground stabilization is achieved.

GROUND STABILIZATION SPECIFICATION

Stabilize the ground sufficiently so that rain will not dislodge the soil. Use one of the techniques in the table below:

Temporary Stabilization	Permanent Stabilization
• Temporary grass seed covered with straw or other mulches and tackifiers • Hydroseeding • Rolled erosion control products with or without temporary grass seed • Appropriately applied straw or other mulch • Plastic sheeting	• Permanent grass seed covered with straw or other mulches and tackifiers • Geotextile fabrics such as permanent soil reinforcement matting • Hydroseeding • Shrubs or other permanent plantings covered with mulch • Uniform and evenly distributed ground cover sufficient to restrain erosion • Structural methods such as concrete, asphalt or retaining walls • Rolled erosion control products with grass seed

POLYACRYLAMIDES (PAMS) AND FLOCCULANTS

1. Select flocculants that are appropriate for the soils being exposed during construction, selecting from the *NC DWR List of Approved PAMS/Flocculants*.
2. Apply flocculants at or before the inlets to Erosion and Sediment Control Measures.
3. Apply flocculants at the concentrations specified in the *NC DWR List of Approved PAMS/Flocculants* and in accordance with the manufacturer's instructions.
4. Provide ponding area for containment of treated Stormwater before discharging offsite.
5. Store flocculants in leak-proof containers that are kept under storm-resistant cover or surrounded by secondary containment structures.

EQUIPMENT AND VEHICLE MAINTENANCE

1. Maintain vehicles and equipment to prevent discharge of fluids.
2. Provide drip pans under any stored equipment.
3. Identify leaks and repair as soon as feasible, or remove leaking equipment from the project.
4. Collect all spent fluids, store in separate containers and properly dispose as hazardous waste (recycle when possible).
5. Remove leaking vehicles and construction equipment from service until the problem has been corrected.
6. Bring used fuels, lubricants, coolants, hydraulic fluids and other petroleum products to a recycling or disposal center that handles these materials.

LITTER, BUILDING MATERIAL AND LAND CLEARING WASTE

1. Never bury or burn waste. Place litter and debris in approved waste containers.
2. Provide a sufficient number and size of waste containers (e.g dumpster, trash receptacle) on site to contain construction and domestic wastes.
3. Locate waste containers at least 50 feet away from storm drain inlets and surface waters unless no other alternatives are reasonably available.
4. Locate waste containers on areas that do not receive substantial amounts of runoff from upland areas and does not drain directly to a storm drain, stream or wetland.
5. Cover waste containers at the end of each workday and before storm events or provide secondary containment. Repair or replace damaged waste containers.
6. Anchor all lightweight items in waste containers during times of high winds.
7. Empty waste containers as needed to prevent overflow. Clean up immediately if containers overflow.
8. Dispose waste off-site at an approved disposal facility.
9. On business days, clean up and dispose of waste in designated waste containers.

PAINT AND OTHER LIQUID WASTE

1. Do not dump paint and other liquid waste into storm drains, streams or wetlands.
2. Locate paint washouts at least 50 feet away from storm drain inlets and surface waters unless no other alternatives are reasonably available.
3. Contain liquid wastes in a controlled area.
4. Containment must be labeled, sized and placed appropriately for the needs of site.
5. Prevent the discharge of soaps, solvents, detergents and other liquid wastes from construction sites.

PORTABLE TOILETS

1. Install portable toilets on level ground, at least 50 feet away from storm drains, streams or wetlands unless there is no alternative reasonably available. If 50 foot offset is not attainable, provide relocation of portable toilet behind silt fence or place on a gravel pad and surround with sand bags.
2. Provide staking or anchoring of portable toilets during periods of high winds or in high foot traffic areas.
3. Monitor portable toilets for leaking and properly dispose of any leaked material. Utilize a licensed sanitary waste hauler to remove leaking portable toilets and replace with properly operating unit.

EARTHEN STOCKPILE MANAGEMENT

1. Show stockpile locations on plans. Locate earthen-material stockpile areas at least 50 feet away from storm drain inlets, sediment basins, perimeter sediment controls and surface waters unless it can be shown no other alternatives are reasonably available.
2. Protect stockpile with silt fence installed along toe of slope with a minimum offset of five feet from the toe of stockpile.
3. Provide stable stone access point when feasible.
4. Stabilize stockpile within the timeframes provided on this sheet and in accordance with the approved plan and any additional requirements. Soil stabilization is defined as vegetative, physical or chemical coverage techniques that will restrain accelerated erosion on disturbed soils for temporary or permanent control needs.

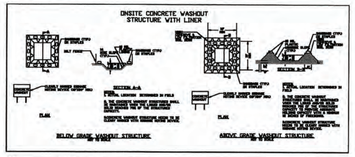

CONCRETE WASHOUTS

1. Do not discharge concrete or cement slurry from the site.
2. Dispose of, or recycle settled, hardened concrete residue in accordance with local and state solid waste regulations and at an approved facility.
3. Manage washout from mortar mixers in accordance with the above item and in addition place the mixer and associated materials on impervious barrier and within lot perimeter silt fence.
4. Install temporary concrete washouts per local requirements, where applicable. If an alternate method or product is to be used, contact your approval authority for review and approval. If local standard details are not available, use one of the two types of temporary concrete washouts provided on this detail.
5. Do not use concrete washouts for dewatering or storing defective curb or sidewalk sections. Stormwater accumulated within the washout may not be pumped into or discharged to the storm drain system or receiving surface waters. Liquid waste must be pumped out and removed from project.
6. Locate washouts at least 50 feet from storm drain inlets and surface waters unless it can be shown that no other alternatives are reasonably available. At a minimum, install protection of storm drain inlet(s) closest to the washout which could receive spills or overflow.
7. Locate washouts in an easily accessible area, on level ground and install a stone entrance pad in front of the washout. Additional controls may be required by the approving authority.
8. Install at least one sign directing concrete trucks to the washout within the project limits. Post signage on the washout itself to identify this location.
9. Remove leavings from the washout when at approximately 75% capacity to limit overflow events. Replace the tarp, sand bags or other temporary structural components when no longer functional. When utilizing alternative or proprietary products, follow manufacturer's instructions.
10. At the completion of the concrete work, remove remaining leavings and dispose of in an approved disposal facility. Fill pit, if applicable, and stabilize any disturbance caused by removal of washout.

HERBICIDES, PESTICIDES AND RODENTICIDES

1. Store and apply herbicides, pesticides and rodenticides in accordance with label restrictions.
2. Store herbicides, pesticides and rodenticides in their original containers with the label, which lists directions for use, ingredients and first aid steps in case of accidental poisoning.
3. Do not store herbicides, pesticides and rodenticides in areas where flooding is possible or where they may spill or leak into wells, stormwater drains, ground water or surface water. If a spill occurs, clean area immediately.
4. Do not stockpile these materials onsite.

HAZARDOUS AND TOXIC WASTE

1. Create designated hazardous waste collection areas on-site.
2. Place hazardous waste containers under cover or in secondary containment.
3. Do not store hazardous chemicals, drums or bagged materials directly on the ground.

NORTH CAROLINA *Environmental Quality*

NCG01 GROUND STABILIZATION AND MATERIALS HANDLING

EFFECTIVE: 04/01/19

PART III
SELF-INSPECTION, RECORDKEEPING AND REPORTING

SECTION A: SELF-INSPECTION

Self-inspections are required during normal business hours in accordance with the table below. When adverse weather or site conditions would cause the safety of the inspection personnel to be in jeopardy, the inspection may be delayed until the next business day on which it is safe to perform the inspection. In addition, when a storm event of equal to or greater than 1.0 inch occurs outside of normal business hours, the self-inspection shall be performed upon the commencement of the next business day. Any time when inspections were delayed shall be noted in the Inspection Record.

Inspect	Frequency (during normal business hours)	Inspection records must include:
(1) Rain gauge maintained in good working order	Daily	Daily rainfall amounts. If no daily rain gauge observations are made during weekend or holiday periods, and no individual-day rainfall information is available, record the cumulative rain measurement for those unattended days (and this will determine if a site inspection is needed). Days on which no rainfall occurred shall be recorded as "zero." The permittee may use another rain-monitoring device approved by the Division.
(2) E&SC Measures	At least once per 7 calendar days and within 24 hours of a rain event ≥ 1.0 inch in 24 hours	1. Identification of the measures inspected, 2. Date and time of the inspection, 3. Name of the person performing the inspection, 4. Indication of whether the measures were operating properly, 5. Description of maintenance needs for the measure, 6. Description, evidence, and date of corrective actions taken.
(3) Stormwater discharge outfalls (SDOs)	At least once per 7 calendar days and within 24 hours of a rain event ≥ 1.0 inch in 24 hours	1. Identification of the discharge outfalls inspected, 2. Date and time of the inspection, 3. Name of the person performing the inspection, 4. Evidence of indicators of stormwater pollution such as oil sheen, floating or suspended solids or discoloration, 5. Indication of visible sediment leaving the site, 6. Description, evidence, and date of corrective actions taken.
(4) Perimeter of site	At least once per 7 calendar days and within 24 hours of a rain event ≥ 1.0 inch in 24 hours	If visible sedimentation is found outside site limits, then a record of the following shall be made: 1. Actions taken to clean up or stabilize the sediment that has left the site limits, 2. Description, evidence, and date of corrective actions taken, and 3. An explanation as to the actions taken to control future releases.
(5) Streams or wetlands onsite or offsite (where accessible)	At least once per 7 calendar days and within 24 hours of a rain event ≥ 1.0 inch in 24 hours	If the stream or wetland has increased visible sedimentation or a stream has visible increased turbidity from the construction activity, then a record of the following shall be made: 1. Description, evidence and date of corrective actions taken, and 2. Records of the required reports to the appropriate Division Regional Office per Part III, Section C, Item (2)(a) of this permit.
(6) Ground stabilization measures	After each phase of grading	1. The phase of grading (installation of perimeter E&SC measures, clearing and grubbing, installation of storm drainage facilities, completion of all land-disturbing activity, construction or redevelopment, permanent ground cover). 2. Documentation that the required ground stabilization measures have been provided within the required timeframe or an assurance that they will be provided as soon as possible.

NOTE: The rain inspection resets the required 7 calendar day inspection requirement.

PART III
SELF-INSPECTION, RECORDKEEPING AND REPORTING

SECTION B: RECORDKEEPING

1. E&SC Plan Documentation

The approved E&SC plan as well as any approved deviation shall be kept on the site. The approved E&SC plan must be kept up-to-date throughout the coverage under this permit. The following items pertaining to the E&SC plan shall be kept on site and available for inspection at all times during normal business hours.

Item to Document	Documentation Requirements
(a) Each E&SC measure has been installed and does not significantly deviate from the locations, dimensions and relative elevations shown on the approved E&SC plan.	Initial and date each E&SC measure on a copy of the approved E&SC plan or complete, date and sign an inspection report that lists each E&SC measure shown on the approved E&SC plan. This documentation is required upon the initial installation of the E&SC measures or if the E&SC measures are modified after initial installation.
(b) A phase of grading has been completed.	Initial and date a copy of the approved E&SC plan or complete, date and sign an inspection report to indicate completion of the construction phase.
(c) Ground cover is located and installed in accordance with the approved E&SC plan.	Initial and date a copy of the approved E&SC plan or complete, date and sign an inspection report to indicate compliance with approved ground cover specifications.
(d) The maintenance and repair requirements for all E&SC measures have been performed.	Complete, date and sign an inspection report.
(e) Corrective actions have been taken to E&SC measures.	Initial and date a copy of the approved E&SC plan or complete, date and sign an inspection report to indicate the completion of the corrective action.

2. Additional Documentation to be Kept on Site

In addition to the E&SC plan documents above, the following items shall be kept on the site and available for inspectors at all times during normal business hours, unless the Division provides a site-specific exemption based on unique site conditions that make this requirement not practical:

(a) This General Permit as well as the Certificate of Coverage, after it is received.

(b) Records of inspections made during the previous twelve months. The permittee shall record the required observations on the Inspection Record Form provided by the Division or a similar inspection form that includes all the required elements. Use of electronically-available records in lieu of the required paper copies will be allowed if shown to provide equal access and utility as the hard-copy records.

3. Documentation to be Retained for Three Years

All data used to complete the e-NOI and all Inspection records shall be maintained for a period of three years after project completion and made available upon request. [40 CFR 122.41]

PART II, SECTION G, ITEM (4)
DRAW DOWN OF SEDIMENT BASINS FOR MAINTENANCE OR CLOSE OUT

Sediment basins and traps that receive runoff from drainage areas of one acre or more shall use outlet structures that withdraw water from the surface when these devices need to be drawn down for maintenance or close out unless this is infeasible. The circumstances in which it is not feasible to withdraw water from the surface shall be rare (for example, times with extended cold weather). Non-surface withdrawals from sediment basins shall be allowed only when all of the following criteria have been met:

(a) The E&SC plan authority has been provided with documentation of the non-surface withdrawal and the specific time periods or conditions in which it will occur. The non-surface withdrawal shall not commence until the E&SC plan authority has approved these items,
(b) The non-surface withdrawal has been reported as an anticipated bypass in accordance with Part III, Section C, Item (2)(c) and (d) of this permit,
(c) Dewatering discharges are treated with controls to minimize discharges of pollutants from stormwater that is removed from the sediment basin. Examples of appropriate controls include properly sited, designed and maintained dewatering tanks, weir tanks, and filtration systems,
(d) Vegetated, upland areas of the sites or a properly designed stone pad is used to the extent feasible at the outlet of the dewatering treatment devices described in Item (c) above,
(e) Velocity dissipation devices such as check dams, sediment traps, and riprap are provided at the discharge points of all dewatering devices, and
(f) Sediment removed from the dewatering treatment devices described in Item (c) above is disposed of in a manner that does not cause deposition of sediment into waters of the United States.

PART III
SELF-INSPECTION, RECORDKEEPING AND REPORTING

SECTION C: REPORTING

1. Occurrences that Must be Reported

Permittees shall report the following occurrences:

(a) Visible sediment deposition in a stream or wetland.

(b) Oil spills if:
- They are 25 gallons or more,
- They are less than 25 gallons but cannot be cleaned up within 24 hours,
- They cause sheen on surface waters (regardless of volume), or
- They are within 100 feet of surface waters (regardless of volume).

(c) Releases of hazardous substances in excess of reportable quantities under Section 311 of the Clean Water Act (Ref: 40 CFR 110.3 and 40 CFR 117.3) or Section 102 of CERCLA (Ref: 40 CFR 302.4) or G.S. 143-215.85.

(d) Anticipated bypasses and unanticipated bypasses.

(e) Noncompliance with the conditions of this permit that may endanger health or the environment.

2. Reporting Timeframes and Other Requirements

After a permittee becomes aware of an occurrence that must be reported, he shall contact the appropriate Division regional office within the timeframes and in accordance with the other requirements listed below. Occurrences outside normal business hours may also be reported to the Department's Environmental Emergency Center personnel at (800) 858-0368.

Occurrence	Reporting Timeframes (After Discovery) and Other Requirements
(a) Visible sediment deposition in a stream or wetland	• ***Within 24 hours***, an oral or electronic notification. • ***Within 7 calendar days***, a report that contains a description of the sediment and actions taken to address the cause of the deposition. Division staff may waive the requirement for a written report on a case-by-case basis. • If the stream is named on the NC 303(d) list as impaired for sediment-related causes, the permittee may be required to perform additional monitoring, inspections or apply more stringent practices if staff determine that additional requirements are needed to assure compliance with the federal or state impaired-waters conditions.
(b) Oil spills and release of hazardous substances per Item 1(b)-(c) above	• ***Within 24 hours***, an oral or electronic notification. The notification shall include information about the date, time, nature, volume and location of the spill or release.
(c) Anticipated bypasses [40 CFR 122.41(m)(3)]	• ***A report at least ten days before the date of the bypass, if possible.*** The report shall include an evaluation of the anticipated quality and effect of the bypass.
(d) Unanticipated bypasses [40 CFR 122.41(m)(3)]	• ***Within 24 hours***, an oral or electronic notification. • ***Within 7 calendar days***, a report that includes an evaluation of the quality and effect of the bypass.
(e) Noncompliance with the conditions of this permit that may endanger health or the environment[40 CFR 122.41(l)(7)]	• ***Within 24 hours***, an oral or electronic notification. • ***Within 7 calendar days***, a report that contains a description of the noncompliance, and its causes; the period of noncompliance, including exact dates and times, and if the noncompliance has not been corrected, the anticipated time noncompliance is expected to continue; and steps taken or planned to reduce, eliminate, and prevent reoccurrence of the noncompliance. [40 CFR 122.41(l)(6).
	• Division staff may waive the requirement for a written report on a case-by-case basis.

NORTH CAROLINA *Environmental Quality*

NCG01 SELF-INSPECTION, RECORDKEEPING AND REPORTING

EFFECTIVE: 04/01/19

SEED BED PREPERATION NOTES

1. SCARIFY SOIL TO A DEPTH OF THREE (3) INCHES AND WORK INTO A SATISFACTORY SEED BED BY DISKING, USE OF CULTIPACKERS, HARROWS, DRAGS AND OTHER APPROVED MEANS.

2. PREPARATION OUTLINED ABOVE SHALL NOT BE DONE WHEN THE SOIL IS FROZEN, WET OR OTHERWISE IN AN UNFAVORABLE CONDITION.

3. BEGIN AND COMPLETE SEEDING OPERATIONS AS OUTLINED AS SOON AS POSSIBLE AFTER FINAL GRADING IS COMPLETED, BUT IN NO EVENT LATER THAN 14 CALENDAR DAYS AFTER COMPLETION OF FINAL GRADING.

4. SEEDING AND MULCHING OPERATIONS SHALL NOT BEGIN UNTIL ELECTRICAL SERVICE HAS BEEN INSTALLED WITHIN THE PROJECT, UNLESS DIRECTED BY THE ARCHITECT/ENGINEER.

5. DISTRIBUTE LIME AND FERTILIZER, UNIFORMLY OVER SEED BED AND HARROW, RAKE, OR OTHERWISE WORK SAME INTO SEED BEDS.

6. DISTRIBUTE SEED UNIFORMLY OVER SEED BED. COVER SEED LIGHTLY AFTER SEEDING.

7. NO LIME, FERTILIZER, OR SEED SHALL BE APPLIED DURING A STRONG WIND, WHEN SOIL IS WET OR OTHERWISE UNWORKABLE. SHOULD RAIN FOLLOW SEEDING BEFORE ROLLING IS BEGUN, THE BED SHALL NOT BE ROLLED.

MAINTENANCE PLAN

1. ALL EROSION AND SEDIMENT CONTROL PRACTICES WILL BE CHECKED FOR STABILITY AND INTEGRITY FOLLOWING EVERY 0.5" OVER 24-HOUR PERIOD RAINFALL EVENT, BUT IN NO CASE LESS THAN ONCE EVERY WEEK. ANY NEEDED REPAIRS WILL BE MADE IMMEDIATELY TO MAINTAIN ALL PRACTICES AS DESIGNED.

2. SEDIMENT WILL BE REMOVED FROM BEHIND THE SEDIMENT FENCE WHEN IT BECOMES 0.5 FT DEEP AT THE FENCE. THE SEDIMENT FENCE WILL BE REPAIRED AS NECESSARY TO MAINTAIN A BARRIER.

3. EROSION CONTROL MATTING SHALL BE MAINTAINED UNTIL ALL WORK IS COMPLETE. AREAS SHALL BE RESEEDED AND MATTING SHALL BE REPLACED AS NEEDED.

4. TEMPORARY GRAVEL CONSTRUCTION ENTRANCE/ EXIT WILL BE INSPECTED PERIODICALLY. WHEN MUD BEGINS TO BUILD-UP, THE ENTRANCE WILL BE BLADED OFF REMOVING THE MUD. ADD NEW STONE TO ENTRANCE AS NEEDED.

5. ALL SEEDED AREAS WILL BE FERTILIZED, RE-SEEDED AS NECESSARY AND MULCHED ACCORDING TO SPECIFICATION IN THE VEGETATIVE PLAN TO MAINTAIN A VIGOROUS, DENSE VEGETATIVE COVER.

EROSION NOTES:

1. NO LAND DISTURBING ACTIVITY BEYOND THAT REQUIRED TO INSTALL APPROPRIATE EROSION CONTROL MEASURES MAY PROCEED UNTIL EROSION CONTROL MEASURES ARE INSPECTED.

2. SEED AND MULCHING OR OTHERWISE PROVIDE GROUND COVER DEVICES OR STRUCTURES SUFFICIENT TO RESTRAIN EROSION FOR ALL EXPOSED SLOPES WITHIN 14 WORKING DAYS OF COMPLETING ANY PHASE OF GRADING.

3. CONTRACTOR SHALL INSPECT AND MAINTAIN AS NEEDED ALL EROSION CONTROL DEVICES ON A WEEKLY BASIS AND AFTER EACH 0.5" OVER 24-HOUR PERIOD RAINFALL EVENT. FAILURE TO KEEP EROSION CONTROL DEVICES IN GOOD WORKING ORDER MAY RESULT IN ISSUANCE OF A STOP WORK ORDER OR CIVIL PENALTIES UP TO $5,000 PER DAY OF VIOLATION. STIES UTILIZING SEDIMENT TRAPS MUST ALSO SPECIFY A MAXIMUM DEPTH OF SEDIMENT PRIOR TO CLEAN OUT.

4. ACCEPTANCE AND APPROVAL OF THIS PLAN IS CONDITIONED UPON YOUR COMPLIANCE WITH FEDERAL AND STATE WATER QUALITY LAWS, REGULATIONS, AND RULES. IN ADDITION, LOCAL CITY AND COUNTY ORDINANCES OR RULES MAY ALSO APPLY TO THIS LAND-DISTURBING ACTIVITY. APPROVAL BY THE CITY DOES NOT SUPERCEDE ANY OTHER PERMIT OR APPROVAL. -PLEASE BE ADVISED OF THE RULES TO PROTECT AND MAINTAIN EXISTING BUFFERS ALONG WATERCOURSES IN THE NEUSE AND TAR RIVER BASINS. THESE RULES ARE ENFORCED BY THE DIVISION OF WATER QUALITY (DWQ). DIRECT ANY QUESTIONS ABOUT THE APPLICABILITY OF THESE RULES TO YOUR PROJECT TO THE REGIONAL WATER QUALITY SUPERVISOR, WASHINGTON REGIONAL OFFICE AT (252) 946-6481.

5. ALL DEWATERING OPERATIONS SHALL BE FILTERED PRIOR TO LEAVING THE SITE.

NPDES INSPECTION REQUIREMENTS:

1. MUST KEEP A RAIN GAUGE ON THE PROJECT SITE.
2. DEDICATED DEMOLITION AND OTHER WASTE AREAS AND EARTHEN MATERIAL STOCKPILES MUST BE LOCATED AT LEAST 50' FORM STORM DRAINS OR STREAMS UNLESS NO ALTERNATIVE IS FEASIBLE.
3. MUST INSPECT ALL EROSION AND SEDIMENT CONTROL MEASURES AT LEAST ONCE A WEEK AND WITHIN 24 HOURS AFTER ANY STORM EVENT GREATER THAN A HALF-INCH (DURING A 24 HOUR PERIOD). MUST TAKE IMMEDIATE CORRECTIVE ACTION FOR ANY DEVICE FAILURE.
4. MUST INSPECT ALL OUTLETS WHERE STORMWATER RUNOFF LEAVES THE SITE AND EVALUATE THE EFFECT ON NEARBY STREAMS OR WETLANDS.
5. CORRECTIVE ACTION MUST BE TAKEN IF SEDIMENT IS DEPOSITED OFF-SITE OR INTO A STREAM OR WETLAND, OR CAUSES A VISIBLE INCREASE IN TURBIDITY OF ANY WATERBODY.
6. MUST KEEP RECORDS OF THESE INSPECTIONS AND ANY CORRECTIVE ACTIONS TAKEN.

GROUND STABILIZATION

SITE AREA DESCRIPTION	STABILIZATION TIME FRAME	STABILIZATION TIME FRAME EXCEPTIONS
* PERIMETER DIKES, SWALES, DITCHES AND SLOPES	7 DAYS	NONE
* HIGH QUALITY WATER (HQW) ZONES	7 DAYS	NONE
* SLOPES STEEPER THAN 3:1	7 DAYS	IF SLOPES ARE 10' OR LESS IN LENGTH AND ARE NOT STEEPER THAN 2:1, 14 DAYS ARE ALLOWED.
* SLOPES 3:1 OR FLATTER	14 DAYS	7 DAYS FOR SLOPES GREATER THAN 50 FEET IN LENGTH
* ALL OTHER AREAS WITH SLOPES FLATTER THAN 4:1	14 DAYS	NONE (EXCEPT FOR PERIMETERS AND HQW ZONES)

VEGETATIVE PLAN:

VEGETATIVE COVER SHALL BE IN ACCORDANCE WITH THE SEEDING SCHEDULE AND THE FOLLOWING SPECIFICATION SECTIONS:

SECTION 02110 SITE CLEARING
SECTION 02120 EROSION & POLLUTION CONTROL
SECTION 02228 CLEAN-UP & SEEDING

TEMPORARY SEEDING

DATE		
APR 15-AUG 14	GERMAN MILLET	50 LBS/ACRE
AUG 15-APR 14	RYE (GRAIN)	50 LBS/ACRE
YEAR ROUND	FERTILIZER 10-20-20 ANALYSIS	400 LBS/ACRE

SEEDING AND MULCHING

ALL ROADWAY AREAS

MARCH 1 - AUGUST 31
50# TALL FESCUE
10# CENTIPEDE
25# BERMUDAGRASS (HULLED)
500# FERTILIZER
4000# LIMESTONE

SEPTEMBER 1 - FEBRUARY 28
50# TALL FESCUE
10# CENTIPEDE
35# BERMUDAGRASS (HULLED)
500# FERTILIZER
4000# LIMESTONE

WATER AND BORROW LOCATIONS

MARCH 1 - AUGUST 31
75# TALL FESCUE
25# BERMUDAGRASS (HULLED)
500# FERTILIZER
4000# LIMESTONE

SEPTEMBER 1 - FEBRUARY 28
75# TALL FESCUE
35# BERMUDAGRASS (HULLED)
500# FERTILIZER
4000# LIMESTONE

NOTE:
50# OF BAHIAGRASS MAY BE SUBSTITUTED FOR EITHER CENTIPEDE OR BERMUDAGRASS ONLY UPON ENGINEER'S REQUEST.

CONSTRUCTION SEQUENCE

1. OBTAIN AND POST A COPY OF THE CERTIFICATE OF EROSION AND SEDIMENT CONTROL PLAN APPROVAL. NOTIFY NCDEQ - LAND QUALITY SECTION, WASHINGTON REGIONAL OFFICE AT 252-946-6481 PRIOR TO COMMENCING CONSTRUCTION. A PRECONSTRUCTION MEETING MAY BE REQUIRED AT THE DISCRETION OF THE DIVISION.
2. CONSTRUCT TEMPORARY CONSTRUCTION ENTRANCE/EXIT.
3. DISTURB LAND ONLY AS NECESSARY TO INSTALL TEMPORARY EROSION AND SEDIMENT CONTROL DEVICES. INSTALL ADDITIONAL EROSION AND SEDIMENT CONTROL DEVICES AS NEEDED OR AS DIRECTED BY THE ENGINEER.
4. PERFORM SITE CLEARING INCLUDING STRIPPING TOPSOIL AND DISPOSE OF DEBRIS AT AN APPROVED SITE. PRIOR TO AND DURING DEMOLITION PHASE INSTALL APPROPRIATE EROSION AND SEDIMENTATION CONTROL MEASURES.
5. TRANSITION EROSION CONTROL MEASURES FROM DEMOLITION PHASE TO CONSTRUCTION PHASE AND INSTALL MEASURES IN APPROPRIATE AREAS.
6. BEGIN CONSTRUCTION OF THE BUILDING PAD, PARKING LOT AND DRIVES INCLUDING AGGREGATE STONE BASE AND STORM DRAINAGE PIPE.
7. BEGIN UTILITY MAIN CONSTRUCTION INCLUDING GRAVITY SEWER, WATER MAIN AND ROOF DRAINS.
8. MAINTAIN EROSION AND SEDIMENTATION MEASURES DURING CONSTRUCTION. CHECK THE MEASURES FOR FAILURE AND AVAILABLE SEDIMENT STORAGE AFTER EACH SIGNIFICANT RAINFALL EVENT.
9. COMPLETE CONSTRUCTION OF THE BUILDING, PARKING LOT, SIDEWALKS AND DRIVES INCLUDING THE PLACEMENT OF THE ASPHALT PAVEMENT.
10. MULCH AND SEED ALL DISTURBED AREAS. ANY SLOPES LEFT EXPOSED WILL WITHIN 14 CALENDAR DAYS OF COMPLETION OF ANY PHASE OF GRADING, BE PLANTED OR OTHERWISE PROVIDED WITH TEMPORARY OR PERMANENT GROUND COVER, DEVICES, OR STRUCTURES SUFFICIENT TO RESTRAIN EROSION.
11. REMOVE ALL TEMPORARY EROSION CONTROL MEASURES ONCE PERMANENT VEGETATION IS ESTABLISHED ± 80%.
12. TIME OF EXPOSURE IS APPROXIMATELY 9 MONTHS OR UNTIL COMPLETION AND STABILIZATION OF THE SITE. CONTRACTOR SHALL PREPARE FOR MAINTENANCE OF THE SITE EROSION AND SEDIMENTATION MEASURES APPROPRIATE FOR THE EXPECTED DURATION.

MATERIALS KEYING LEGEND

GENERAL NOTES

THE EAST GROUP, P.A.
•Engineering•Architecture•Surveying•Technology
324 Evans St., Greenville, NC 27858 (252) 758-3746 (252) 830-3954 (Fax)
4325 Lake Boone Trail, Suite 311, Raleigh, NC 27607 (919) 784-9330 (919) 784-9331 (Fax)
• NC Engineering License No. C-0208 • NC Architectural License No. 50213
• NC Landscape Architectural License No. C-427

KEY PLAN

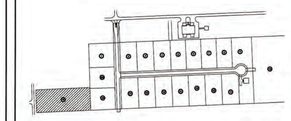

SCO ID #23-27044-01A

NO	REVISION	DATE

SEAL

NORTH CAROLINA PROFESSIONAL SEAL 029422 ENGINEER MICHAEL S. CLEMENTS

Michael S. Clements, P.E.
Clements Group, P.A.
2025.01.27 09:33:34 -05'00'

JKF ARCHITECTURE

625 LYNNDALE CT., SUITE F, GREENVILLE, NC 27858 252-355-1068

BEAUFORT COUNTY COMMUNITY COLLEGE
INDUSTRIAL TRAINING CENTER
AURORA, NC

DRAWING TITLE: NOTES

SCALE: AS NOTED	DRAWING NO: C6.1
DRAWN: SLJ	
CHECKED: MSC	
DATE: 1-6-2025	
PROJECT NO.: 20240128	

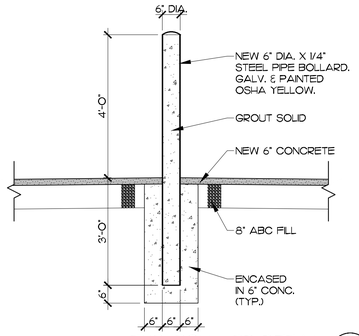

TYP. BOLLARD DETAIL K9
1/2" = 1'-0"

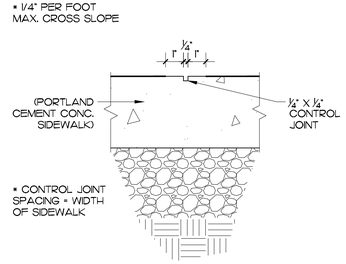

TYPICAL CONCRETE WALK CONTROL JOINT DETAIL K12
N.T.S.

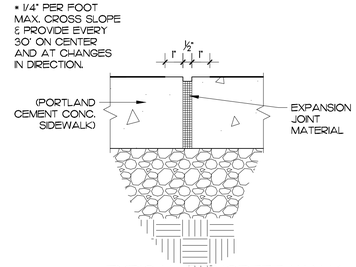

TYPICAL CONCRETE WALK EXPANSION JOINT DETAIL K15
N.T.S.

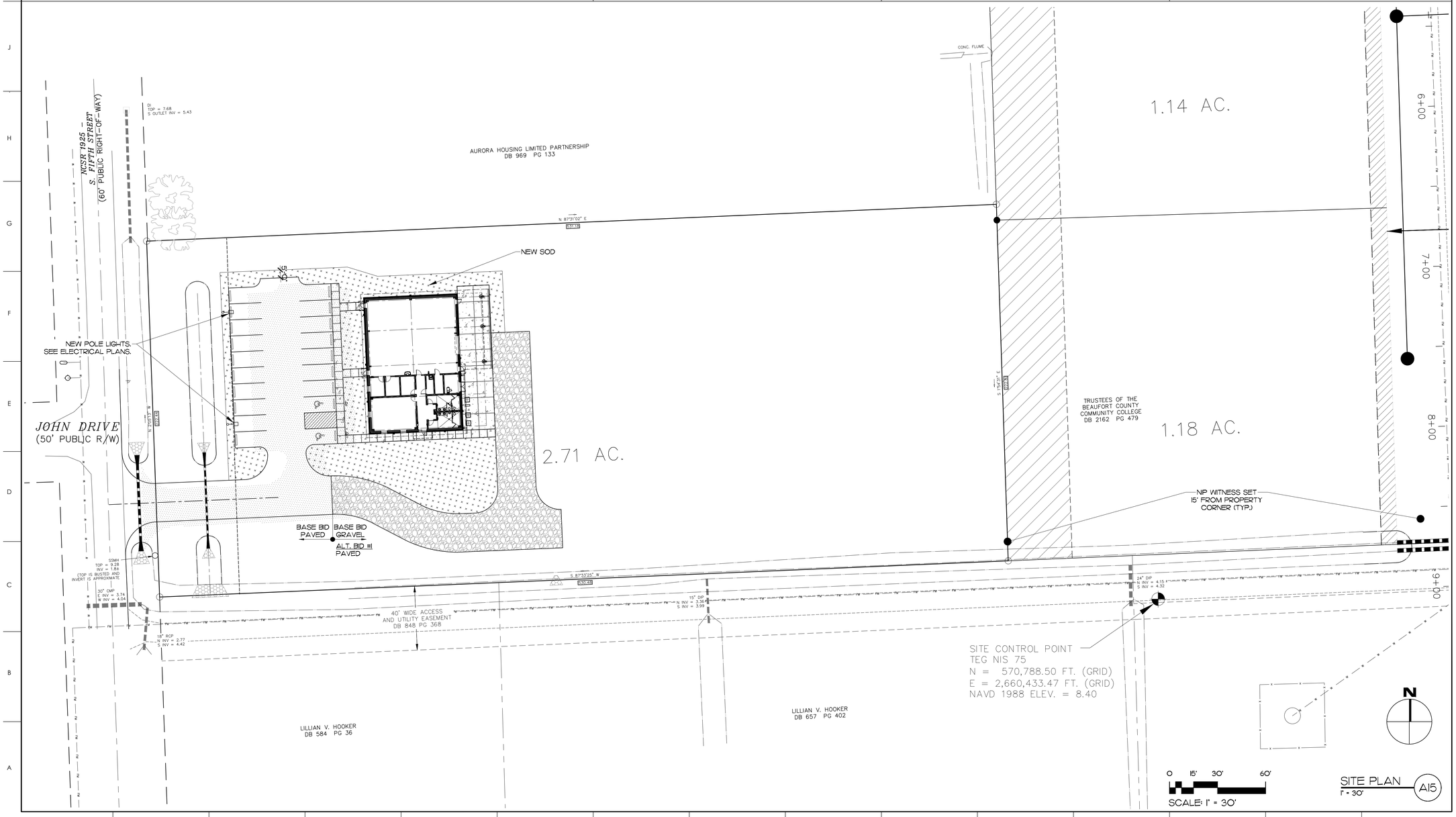

SITE PLAN A15
1" = 30'

MATERIALS KEYING LEGEND

GENERAL NOTES

KEY PLAN

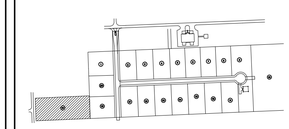

SCO ID #23-27044-01A

NO	REVISION	DATE

SEAL

JOHN K. FARKAS REGISTERED ARCHITECT 5082 GREENVILLE, N.C. 1/23/2025

JKF ARCHITECTURE

625 LYNNDALE CT., SUITE F, GREENVILLE, NC 27858 252-355-1068

BEAUFORT COUNTY COMMUNITY COLLEGE INDUSTRIAL TRAINING CENTER
AURORA, NC

DRAWING TITLE
ARCHITECTURAL SITE PLAN

SCALE	AS NOTED
DRAWN	JRH
CHECKED	JKF
DATE	1-6-2025
PROJECT NO.	2024-10
DRAWING NO	ASP1.1

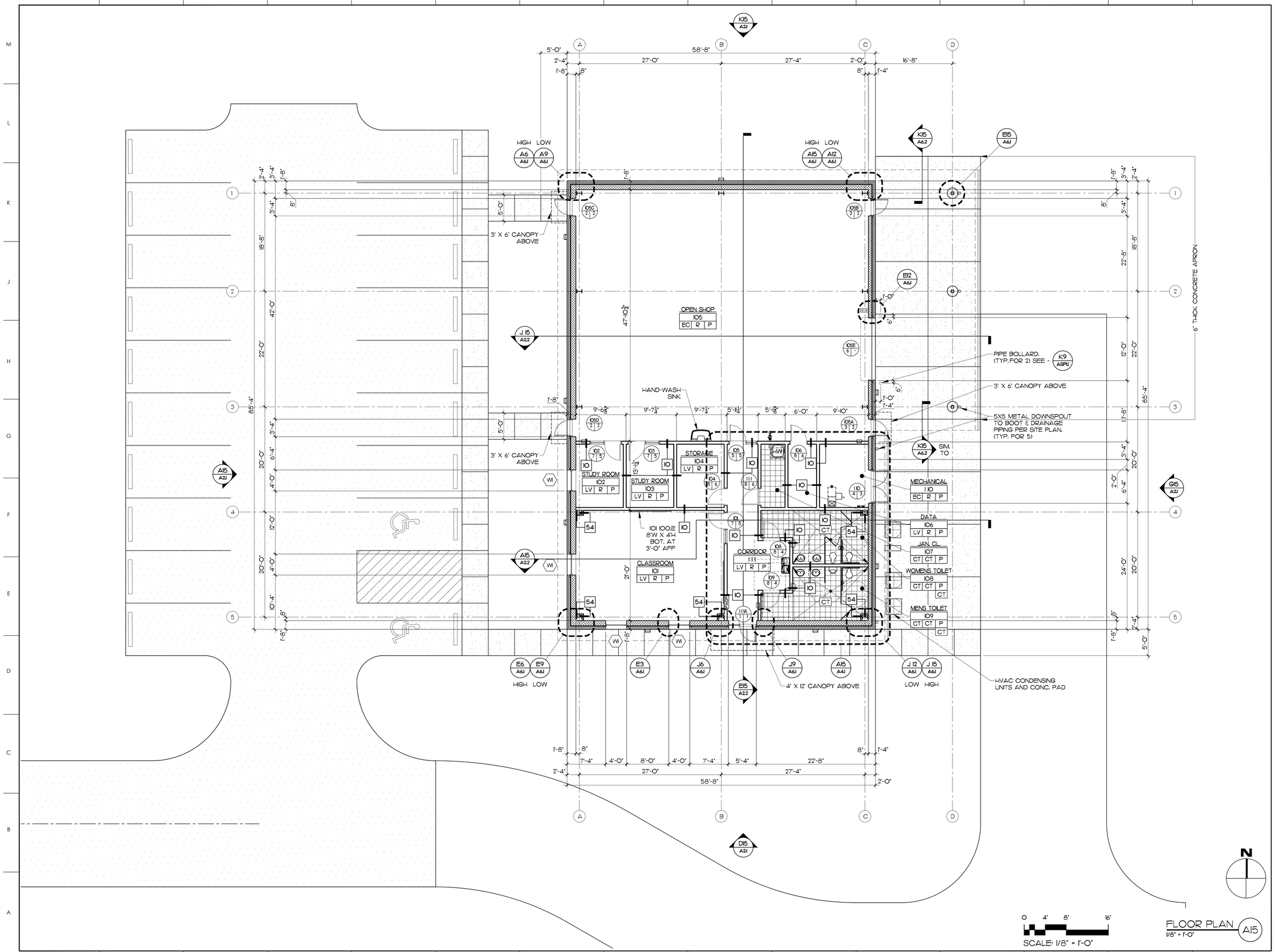

MATERIALS KEYING LEGEND

07620O.B - METAL DOWNSPOUT
101 100.E - GLASS MARKER BOARD
10.4413.A - SEMI-RECESSED FIRE EXTINGUISHER CABINET
10.4416.A - FIRE EXTINGUISHER

GENERAL NOTES

KEY PLAN

SCO ID #23-27044-01A

NO	REVISION	DATE

SEAL

JOHN K. FARKAS REGISTERED ARCHITECT 1/23/2025 SEAL 2004 NORTH CAROLINA GREENVILLE, N.C.

JKF ARCHITECTURE

625 LYNNDALE CT. SUITE F, GREENVILLE, NC 27858 252-355-1068

BEAUFORT COUNTY COMMUNITY COLLEGE INDUSTRIAL TRAINING CENTER
AURORA, NC

DRAWING TITLE
FLOOR PLAN

SCALE 1/8" = 1'-0"	DRAWING NO A1.1
DRAWN JRH	
CHECKED JKF	
DATE 1-6-2025	
PROJECT NO. 2024-10	

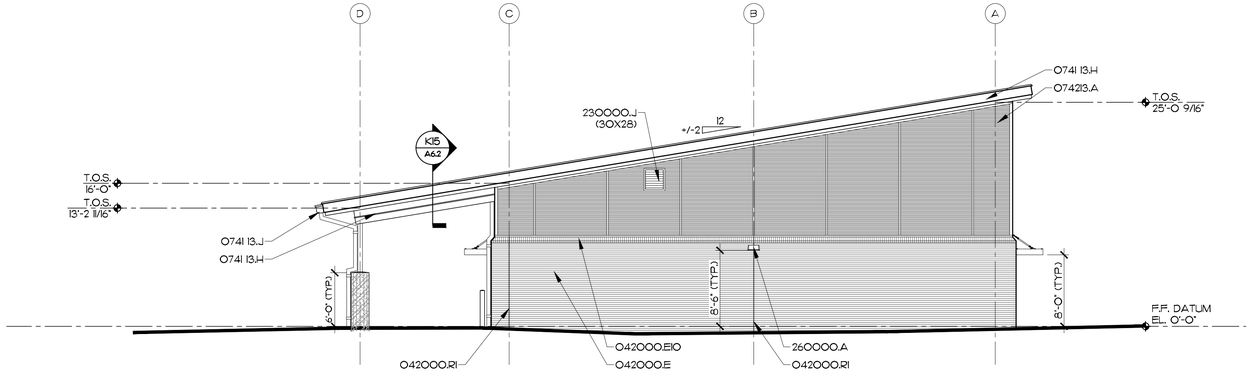

NORTH ELEVATION K15
1/8" = 1'-0"

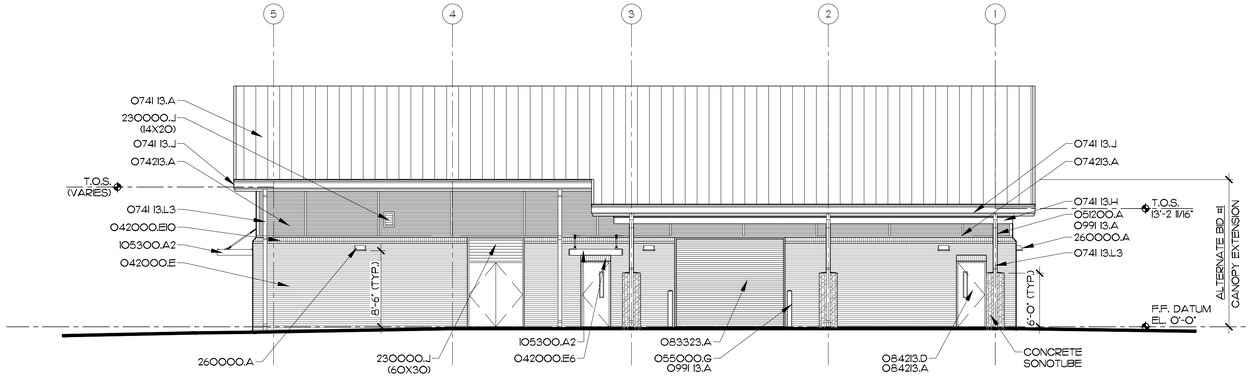

EAST ELEVATION G15
1/8" = 1'-0"

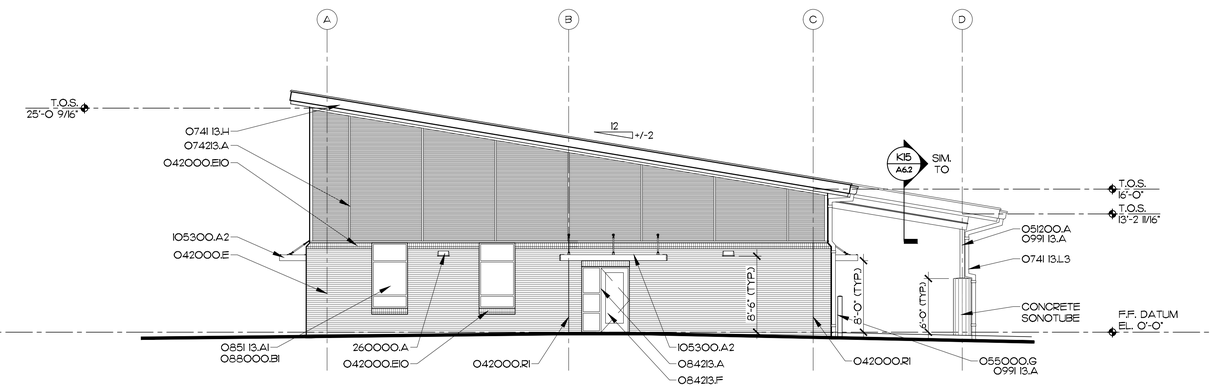

SOUTH ELEVATION D15
1/8" = 1'-0"

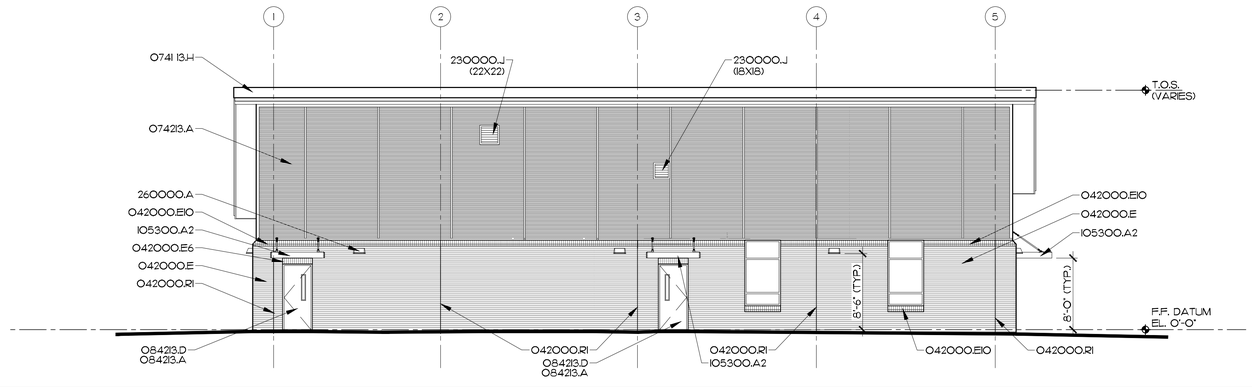

WEST ELEVATION A15
1/8" = 1'-0"

MATERIALS KEYING LEGEND

042000.E	- FACE BRICK
042000.E6	- FACE BRICK, SHELF BRICK, SOLDIER COURSE
042000.E10	- FACE BRICK, SOLDIER COURSE SILL, SPECIAL SHAPE
042000.R1	- CONTROL JOINT
051200.A	- STRUCTURAL STEEL, SEE STRUCTURAL DRAWINGS
055000.G	- STEEL BOLLARD, PAINTED
074113.A	- METAL ROOF, STANDING SEAM SYSTEM
074113.H	- METAL FASCIA
074113.J	- METAL GUTTER
074113.L3	- METAL DOWNSPOUT, 5X5
074213.A	- METAL WALL PANEL
083323.A	- OVERHEAD COILING DOOR
084213.A	- STOREFRONT FRAMING, THERMALLY BROKEN
084213.D	- ALUMINUM FRP DOOR
084213.F	- ALUMINUM STILE AND RAIL DOOR
085113.AI	- ALUMINUM WINDOW ASSEMBLY, FIXED WINDOW
088000.BI	- 1" INSULATING GLASS-LOW E
099113.A	- PAINT FINISH, EXTERIOR SYSTEM
105300.A2	- ALUMINUM CANOPY ASSEMBLY WITH SUPPORT RODS
230000.J	- MECH. LOUVER-SEE HVAC DRAWINGS
260000.A	- EXTERIOR LIGHT FIXTURE

GENERAL NOTES

KEY PLAN

SCO ID #23-27044-01A

NO	REVISION	DATE

SEAL

JOHN K. FARKAS
REGISTERED ARCHITECT
5982
NORTH CAROLINA
GREENVILLE, N.C.
1/23/2025

JKF ARCHITECTURE

625 LYNNDALE CT., SUITE F, GREENVILLE, NC 27858 252-355-1068

BEAUFORT COUNTY
COMMUNITY COLLEGE
INDUSTRIAL TRAINING CENTER
AURORA, NC

DRAWING TITLE

EXTERIOR ELEVATIONS

SCALE	1/8"=1'-0"
DRAWN	JRH
CHECKED	JKF
DATE	1-6-2025
PROJECT NO.	2024-10
DRAWING NO	A2.1

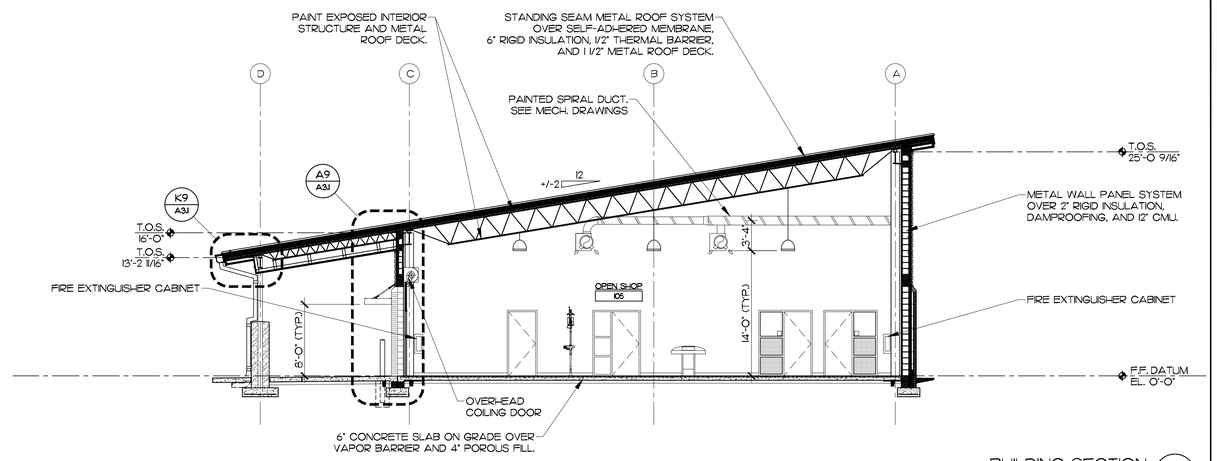

BUILDING SECTION J15
1/8" = 1'-0"

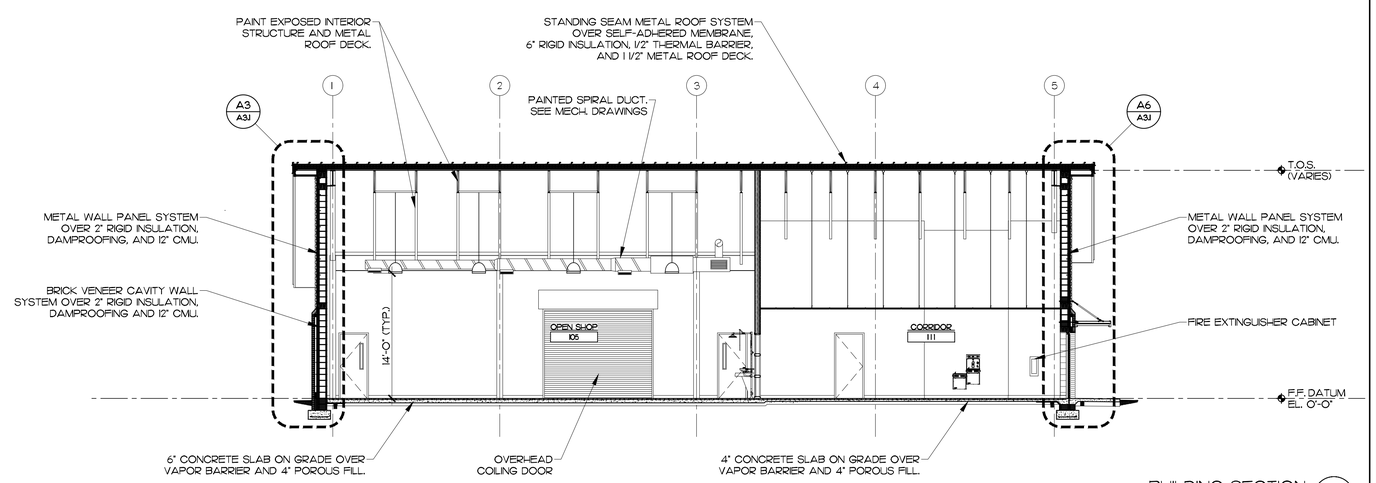

BUILDING SECTION E15
1/8" = 1'-0"

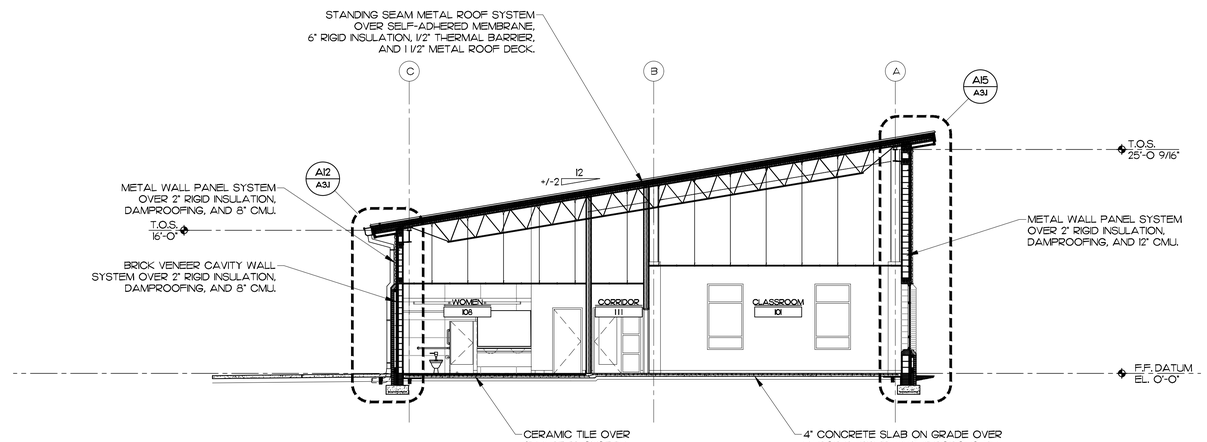

BUILDING SECTION A15
1/8" = 1'-0"

MATERIALS KEYING LEGEND

GENERAL NOTES

KEY PLAN

SCO ID #23-27044-01A

NO	REVISION	DATE

SEAL

JOHN K. FARKAS REGISTERED ARCHITECT 5822 GREENVILLE, N.C. 1/23/2025

JKF ARCHITECTURE

625 LYNNDALE CT., SUITE F, GREENVILLE, NC 27858 252-355-1068

BEAUFORT COUNTY COMMUNITY COLLEGE
INDUSTRIAL TRAINING CENTER
AURORA, NC

DRAWING TITLE
BUILDING SECTIONS

SCALE 1/8" = 1'-0"	DRAWING NO A2.2
DRAWN JRH	
CHECKED JKF	
DATE 1-6-2025	
PROJECT NO. 2024-10	

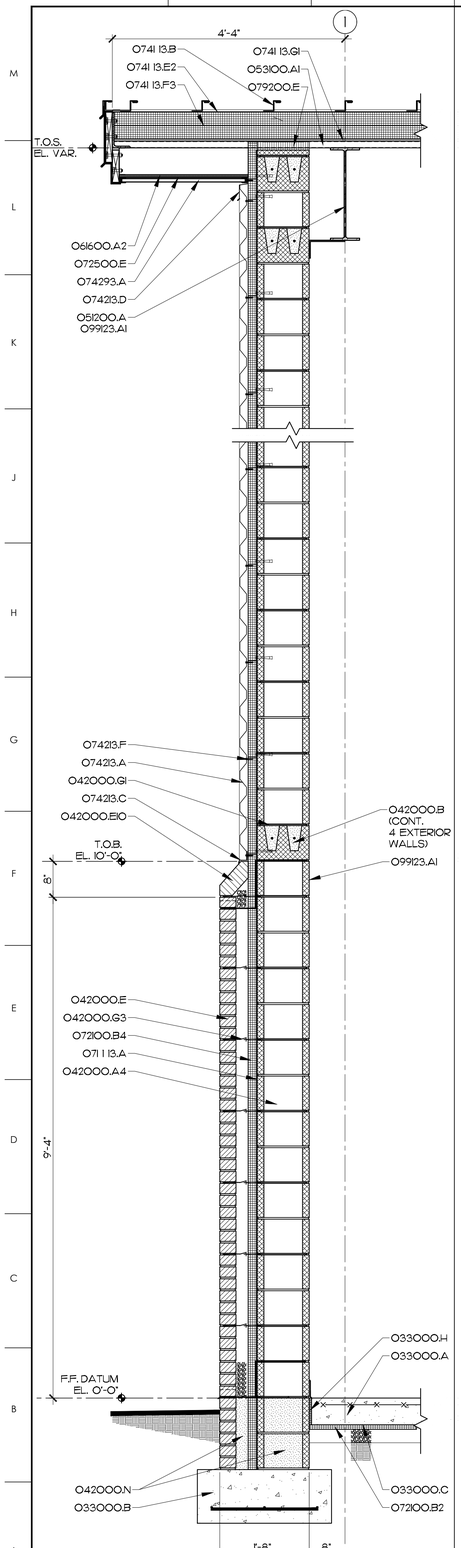

WALL SECTION A3
3/4" = 1'-0"

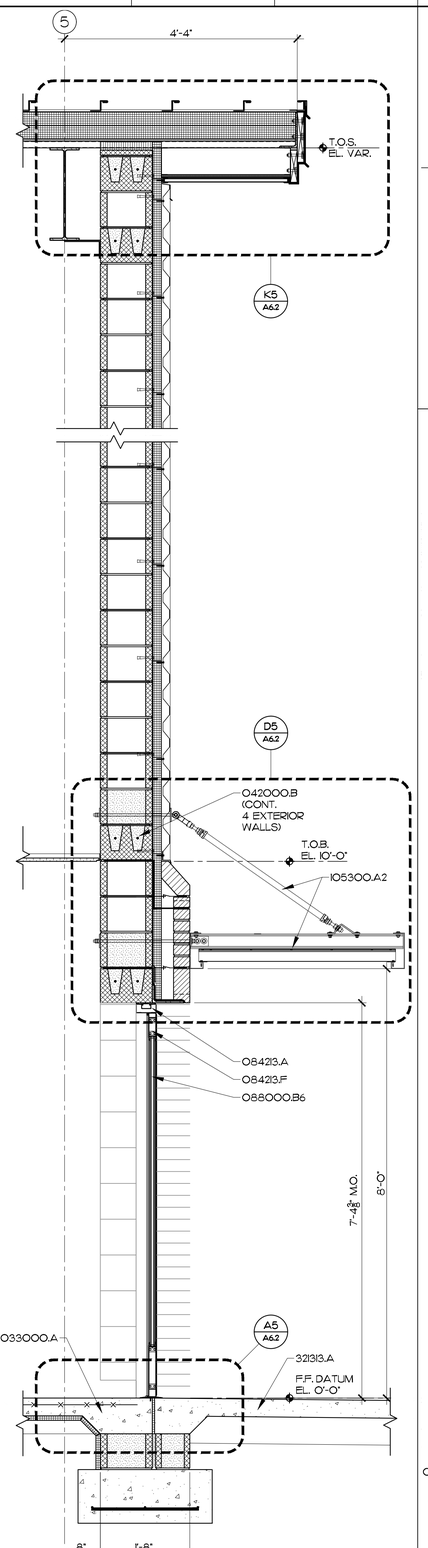

WALL SECTION A6
3/4" = 1'-0"

* SEE WALL SECTION A3 FOR ADDITIONAL KEYNOTES

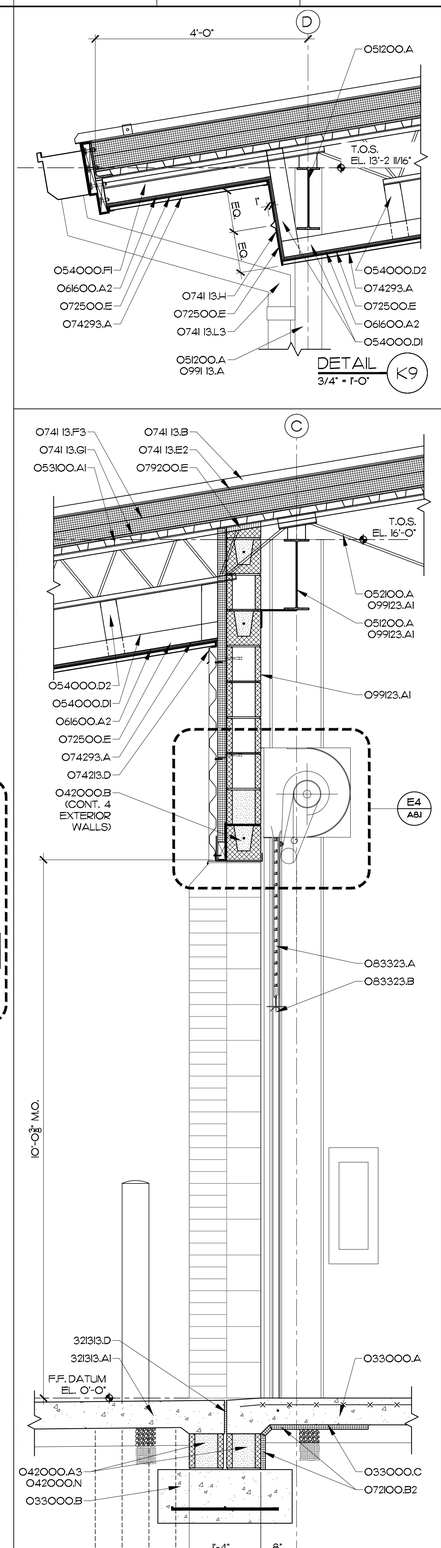

WALL SECTION A9
3/4" = 1'-0"

* SEE WALL SECTION A3 FOR ADDITIONAL KEYNOTES

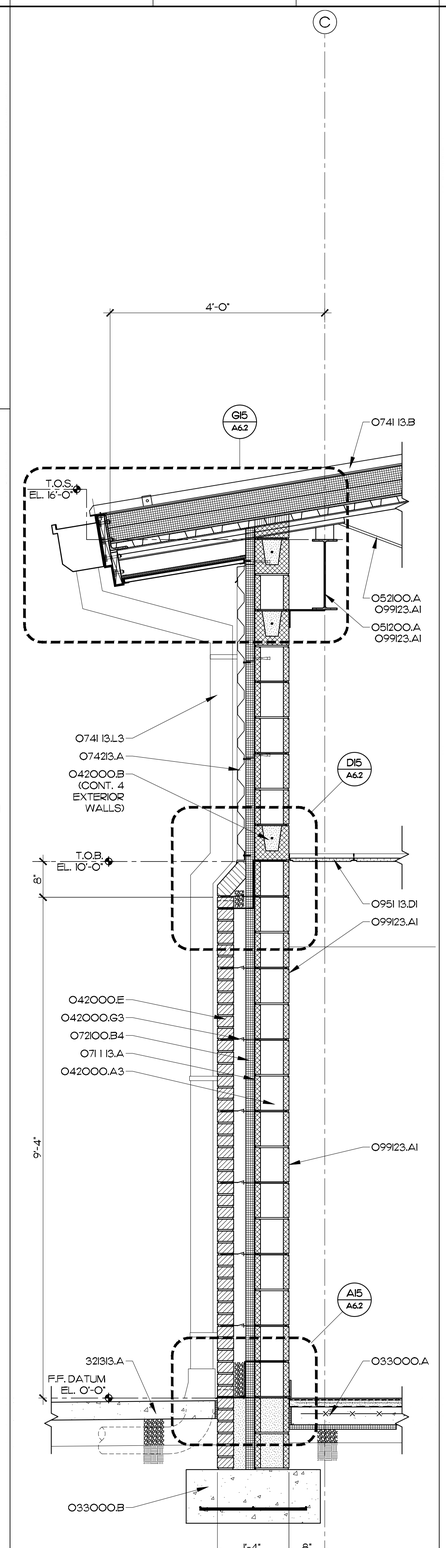

WALL SECTION A12
3/4" = 1'-0"

* SEE WALL SECTION A3 FOR ADDITIONAL KEYNOTES

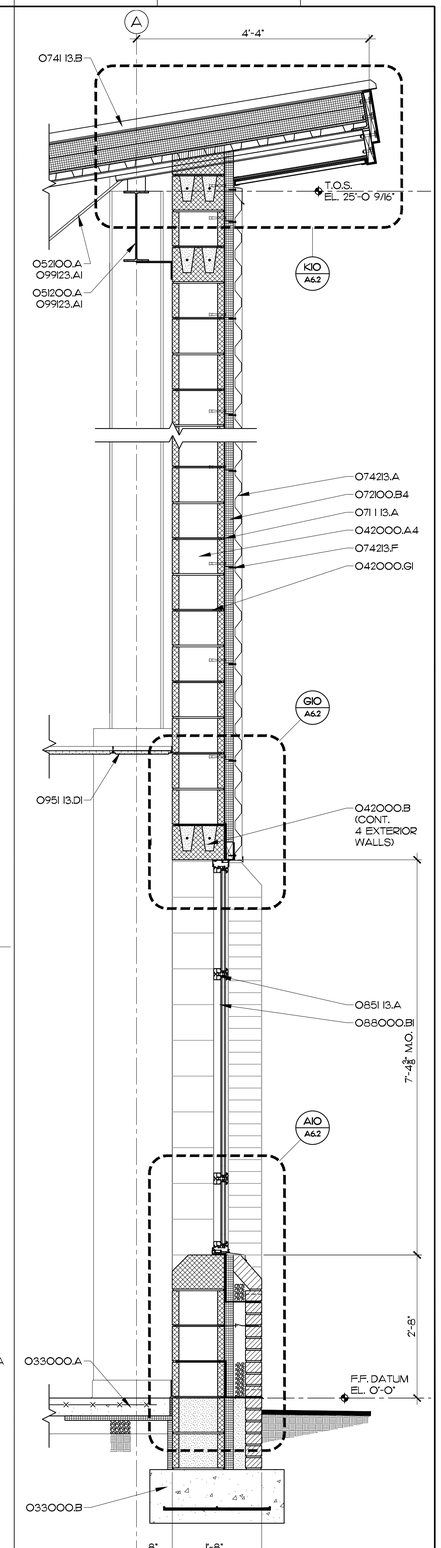

WALL SECTION A15
3/4" = 1'-0"

* SEE WALL SECTION A3 FOR ADDITIONAL KEYNOTES

MATERIALS KEYING LEGEND

033000.A	- CONCRETE SLAB ON GRADE, SEE STRUCTURAL
033000.B	- CONCRETE FOOTING, SEE STRUCTURAL
033000.C	- VAPOR BARRIER
033000.H	- COMPRESSIBLE FILL
042000.A3	- CONCRETE MASONRY UNIT, 8"
042000.A4	- CONCRETE MASONRY UNIT, 12"
042000.B	- CONCRETE MASONRY, BOND BEAM
042000.E	- FACE BRICK
042000.E10	- FACE BRICK, SOLDIER COURSE SILL, SPECIAL SHAPE
042000.G1	- HORIZONTAL JOINT REINFORCING AT 16" O.C. VERT.
042000.G3	- HORIZONTAL JOINT REINF. AT 16" VERT. & BROK TIE EYES AT 24" O.C. HORIZ.
042000.N	- GROUT SOLID
051200.A	- STRUCTURAL STEEL, SEE STRUCTURAL DRAWINGS
052100.A	- STEEL BAR JOIST, SEE STRUCTURAL DRAWINGS
053100.A1	- ROOF DECK, 1 1/2"
054000.D1	- COLD FORMED METAL FRAMING, 3 5/8" STUD AT 16" O.C.
054000.D2	- COLD FORMED METAL FRAMING, 3 5/8" STUD AT 48" O.C.
054000.F1	- COLD FORMED METAL FRAMING, 6" STUD AT 16" O.C.
061600.A2	- PLYWOOD SHEATHING, 1/2" THICK
071113.A	- BITUMINOUS DAMPROOFING
072100.B2	- 1" RIGID INSULATION
072100.B4	- 2" RIGID INSULATION
072500.E	- BUILDING WRAP
074113.B	- METAL ROOF, STANDING SEAM PANEL
074113.E2	- SELF ADHERING SHEET
074113.F3	- RIGID INSULATION, 6" THICK
074113.G1	- GLASS-MAT GYP. SHEATHING, 1/2" THICK
074113.H	- METAL FASCIA
074113.L3	- METAL DOWNSPOUT, 5X5
074293.A	- METAL WALL PANEL
074213.C	- METAL SILL FLASHING
074213.D	- METAL CLOSURE TRIM
074213.F	- 2" METAL Z-FURRING CHANNEL, 16" O.C.
074293.A	- METAL SOFFIT PANELS
079200.E	- COMPRESSIVE FILL
083323.A	- OVERHEAD COILING DOOR
083323.B	- OVERHEAD COILING DOOR, METAL TRACK
084213.A	- STOREFRONT FRAMING, THERMALLY BROKEN
084213.F	- ALUMINUM STILE AND RAIL DOOR
085113.A	- ALUMINUM WINDOW ASSEMBLY
088000.B1	- 1" INSULATING GLASS-LOW E
088000.B6	- 1" INSULATING GLASS, TEMPERED LOW E
095113.D1	- ACOUSTICAL PANEL CEILING TILE, 2X2
099113.A	- PAINT FINISH, EXTERIOR SYSTEM
099123.A1	- PAINT FINISH, INTERIOR SYSTEM
105300.A2	- ALUMINUM CANOPY ASSEMBLY WITH SUPPORT RODS
321313.A	- CONCRETE SIDEWALK, 4" THICK
321313.A1	- CONCRETE SIDEWALK, 6" THICK
321313.D	- COMPRESSIBLE FILL

GENERAL NOTES

KEY PLAN

SCO ID #23-27044-01A

NO	REVISION	DATE

SEAL

JOHN K. FARKAS
REGISTERED ARCHITECT
#
1/23/2025
5922
GREENVILLE, N.C.

JKF ARCHITECTURE

625 LYNNDALE CT., SUITE F, GREENVILLE, NC 27858 252-355-1068

BEAUFORT COUNTY
COMMUNITY COLLEGE
INDUSTRIAL TRAINING CENTER
AURORA, NC

DRAWING TITLE

WALL SECTIONS

SCALE	3/4" = 1'-0"
DRAWN	JRH
CHECKED	JKF
DATE	1-6-2025
PROJECT NO.	2024-10
DRAWING NO	A3.1

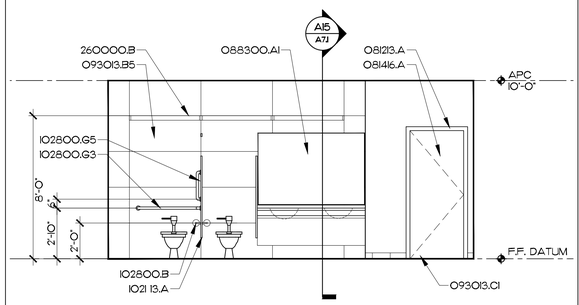

ELEVATION K8
1/4" = 1'-0"

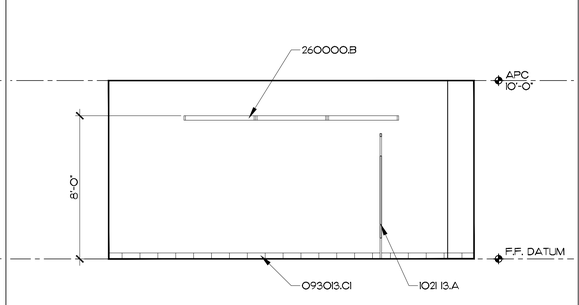

ELEVATION K12
1/4" = 1'-0"

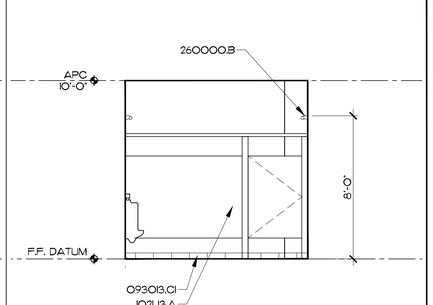

ELEVATION K15
1/4" = 1'-0"

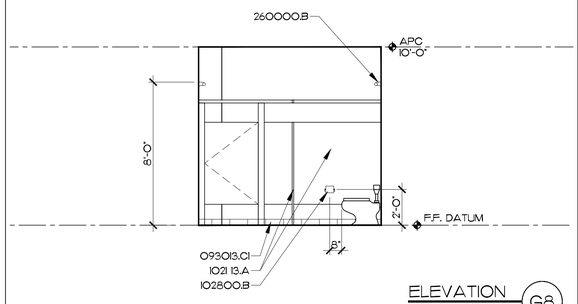

ELEVATION G8
1/4" = 1'-0"

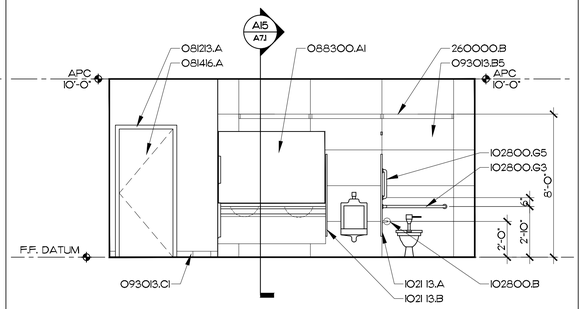

ELEVATION G12
1/4" = 1'-0"

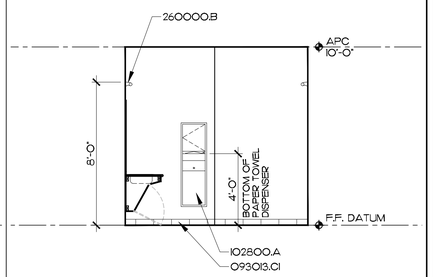

ELEVATION G15
1/4" = 1'-0"

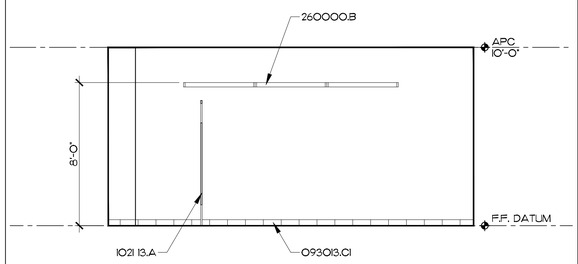

ELEVATION D8
1/4" = 1'-0"

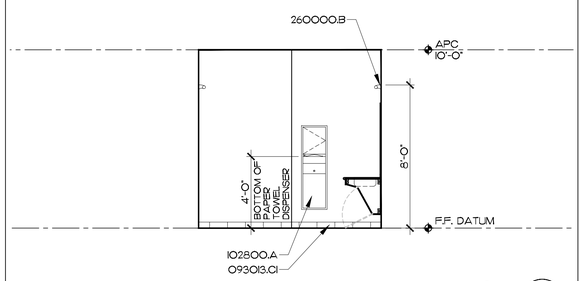

ELEVATION A8
1/4" = 1'-0"

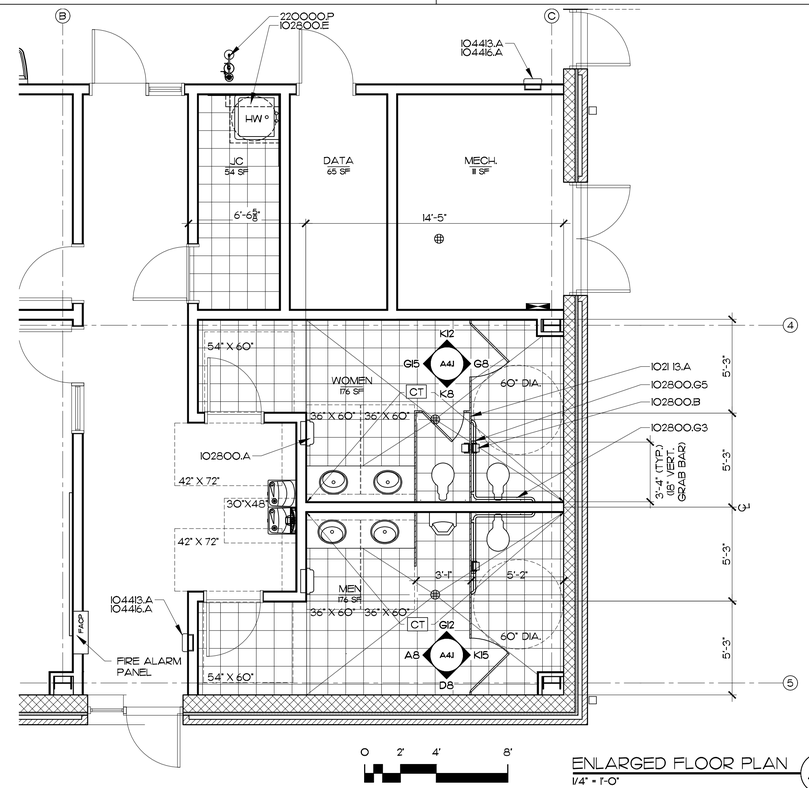

ENLARGED FLOOR PLAN A15
1/4" = 1'-0"

MATERIALS KEYING LEGEND

081213.A	-	HOLLOW METAL FRAME
081416.A	-	SOLID CORE WOOD DOOR, FLUSH
088300.A1	-	1/4" GLASS MIRROR
093013.B5	-	CERAMIC TILE, 24X48
093013.C1	-	CERAMIC TILE, SPECIAL SHAPE, COVE BASE, 4" HIGH
1021 13.A	-	TOILET COMPARTMENT
1021 13.B	-	URINAL SCREEN
102800.A	-	TOWEL DISPENSER/WASTE RECEPTACLE
102800.B	-	TOILET TISSUE DISPENSER
102800.E	-	MOP AND BROOM HOLDER W/ UTILITY SHELF
102800.G3	-	42X54 GRAB BAR
102800.G5	-	18" VERT. GRAB BAR
104413.A	-	SEMI-RECESSED FIRE EXTINGUISHER CABINET
104416.A	-	FIRE EXTINGUISHER
220000.P	-	EMERGENCY SHOWER W/EYEWASH
2600000.B	-	INTERIOR LIGHT FIXTURE

GENERAL NOTES

KEY PLAN

SCO ID #23-27044-01A

NO	REVISION	DATE

SEAL

JOHN K. FARKAS
REGISTERED ARCHITECT
5/23/2025
GREENVILLE, N.C.

JKF ARCHITECTURE

625 LYNNDALE CT., SUITE F, GREENVILLE, NC 27858 252-355-1068

BEAUFORT COUNTY
COMMUNITY COLLEGE
INDUSTRIAL TRAINING CENTER
AURORA, NC

DRAWING TITLE

ENLARGED FLOOR PLAN
AND INTERIOR ELEVATIONS

SCALE 1/4" = 1'-0"	DRAWING NO A4.1
DRAWN JRH	
CHECKED JKF	
DATE 1-6-2025	
PROJECT NO. 2024-10	

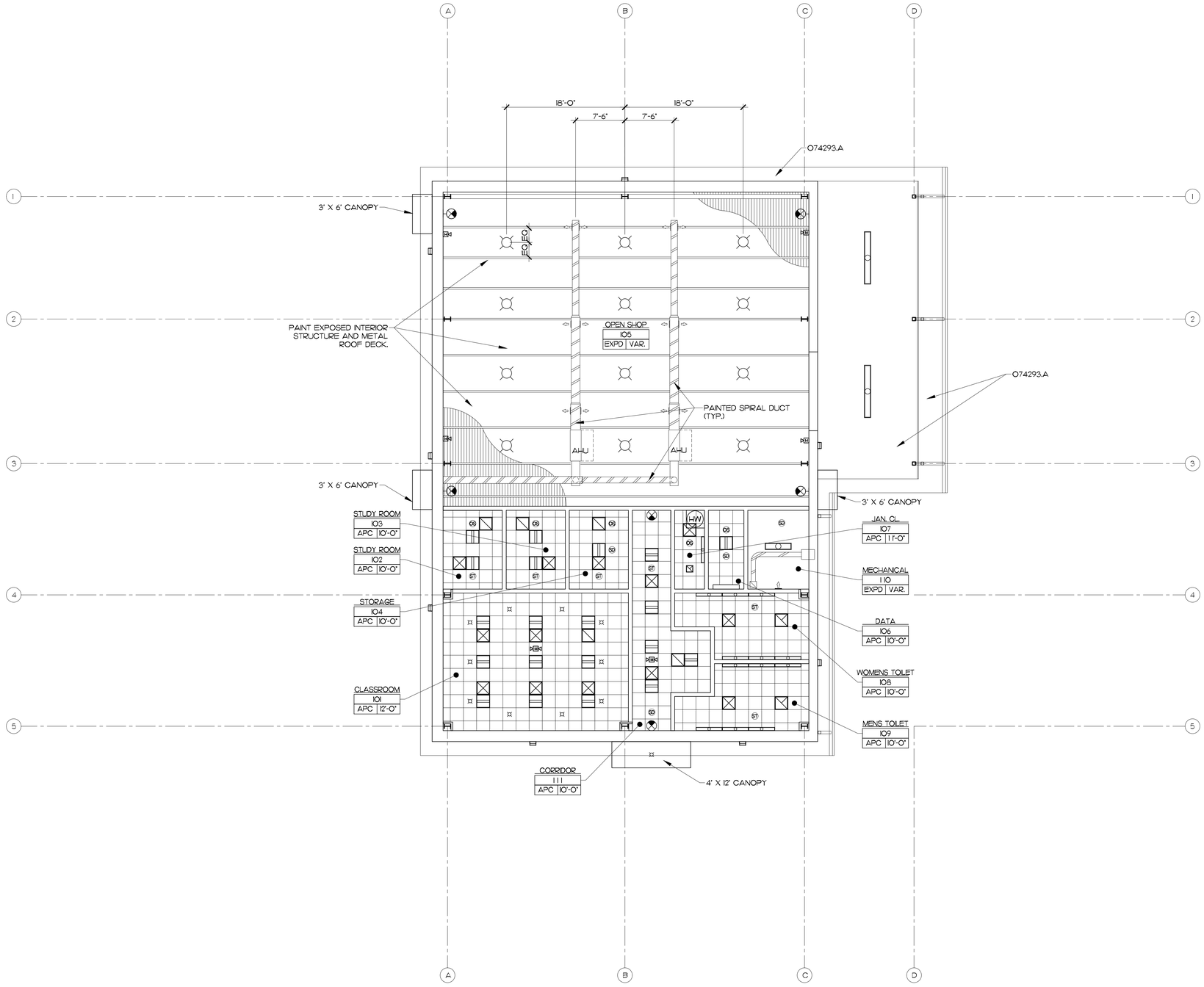

N

0 4' 8' 16'

SCALE: 1/8" = 1'-0"

REFLECTED CEILING PLAN A15

1/8" = 1'-0"

MATERIALS KEYING LEGEND

O74293.A - METAL SOFFIT PANELS

GENERAL NOTES

KEY PLAN

SCO ID #23-27044-01A

NO	REVISION	DATE

SEAL

JOHN K. FARKAS REGISTERED ARCHITECT 5922 GREENVILLE, N.C. 8/23/2023

JKF ARCHITECTURE

625 LYNNDALE CT., SUITE F, GREENVILLE, NC 27858 252-355-1068

BEAUFORT COUNTY COMMUNITY COLLEGE INDUSTRIAL TRAINING CENTER
AURORA, NC

DRAWING TITLE

REFLECTED CEILING PLAN

SCALE 1/8" = 1'-0"	DRAWING NO A5.1
DRAWN JRH	
CHECKED JKF	
DATE 1-6-2025	
PROJECT NO. 2024-10	

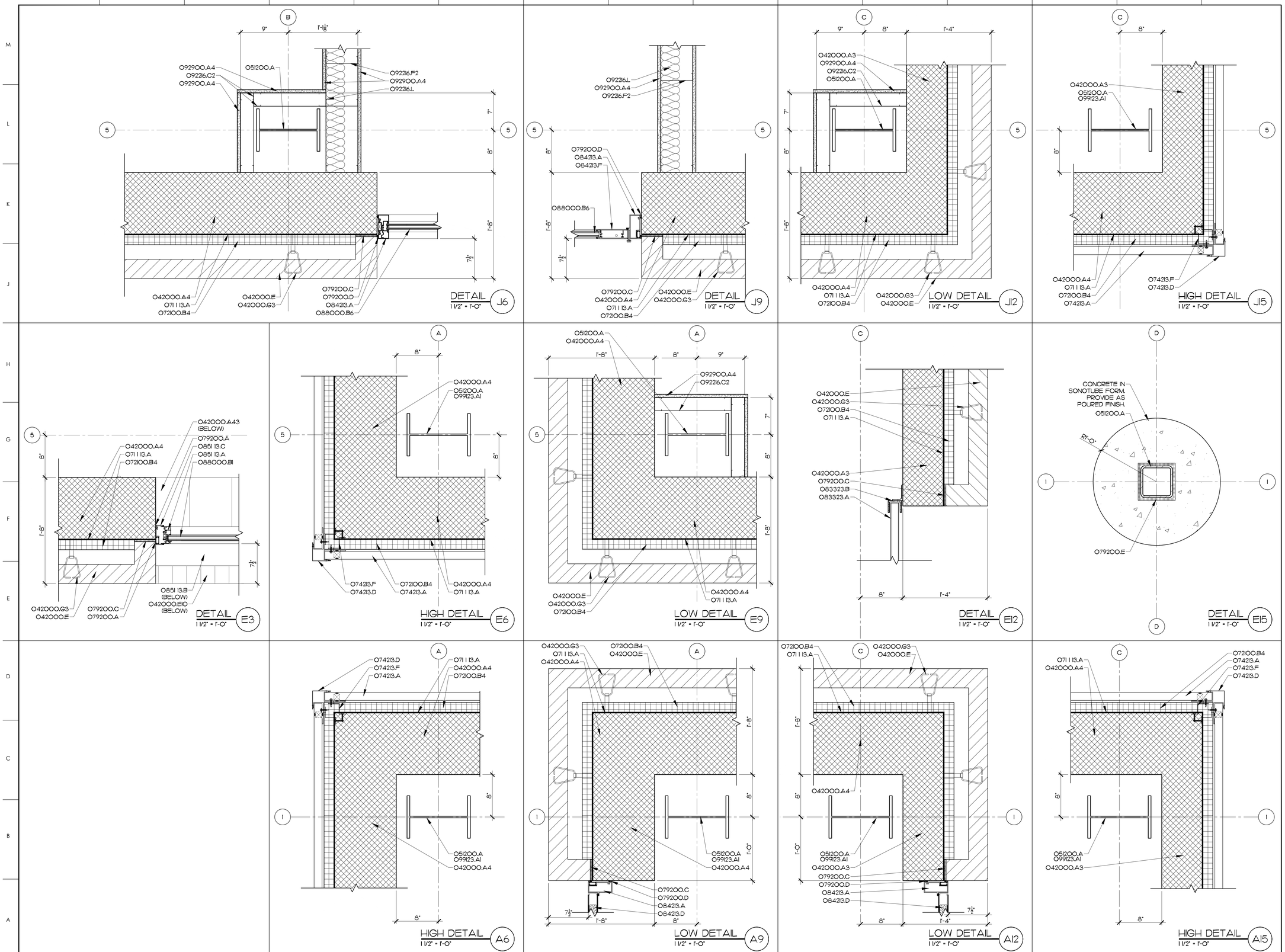

MATERIALS KEYING LEGEND

O42000.A3	- CONCRETE MASONRY UNIT, 8"
O42000.A4	- CONCRETE MASONRY UNIT, 12"
O42000.A43	- CONCRETE MASONRY UNIT, 12" SOLID BEVELED
O42000.E	- FACE BRICK
O42000.E10	- FACE BRICK, SOLDIER COURSE SILL, SPECIAL SHAPE
O42000.G3	- HORIZONTAL JOINT REINF. AT 16" VERT. & BRICK TIE EYES AT 24" O.C. HORIZ.
O51200.A	- STRUCTURAL STEEL, SEE STRUCTURAL DRAWINGS
O71 1 13.A	- BITUMINOUS DAMPROOFING
O72100.B4	- 2" RIGID INSULATION
O74213.A	- METAL WALL PANEL
O74213.D	- METAL CLOSURE TRIM
O74213.F	- 2" METAL Z-FURRING CHANNEL, 16" O.C.
O79200.A	- SEALANT
O79200.C	- COMPRESSIBLE SEALER W/ ADHESIVE
O79200.D	- BACKER ROD & SEALANT
O79200.E	- COMPRESSIVE FILL
O83323.A	- OVERHEAD COILING DOOR
O83323.B	- OVERHEAD COILING DOOR, METAL TRACK
O84213.A	- STOREFRONT FRAMING, THERMALLY BROKEN
O84213.D	- ALUMINUM FRP DOOR
O84213.F	- ALUMINUM STILE AND RAIL DOOR
O851 13.A	- ALUMINUM WINDOW ASSEMBLY
O851 13.B	- METAL SILL PAN
O851 13.C	- METAL SUB FRAME
O88000.B1	- 1" INSULATING GLASS-LOW E
O88000.B6	- 1" INSULATING GLASS, TEMPERED LOW E
O92216.C2	- 2 1/2" METAL STUDS AT 16" O.C.
O92216.F2	- 6" METAL STUDS AT 16" O.C.
O92216.L	- ACOUSTICAL BLANKET, THICKNESS AS NOTED IN PARTITION TYPES
O92900.A4	- 5/8" GYPSUM WALLBOARD
O99123.A1	- PAINT FINISH, INTERIOR SYSTEM

GENERAL NOTES

KEY PLAN

SCO ID #23-27044-01A

NO	REVISION	DATE

SEAL

JOHN K. FARKAS REGISTERED ARCHITECT 1/23/2025 5922 GREENVILLE, N.C.

JKF ARCHITECTURE

625 LYNNDALE CT., SUITE F, GREENVILLE, NC 27858 252-355-1068

BEAUFORT COUNTY COMMUNITY COLLEGE INDUSTRIAL TRAINING CENTER
AURORA, NC

DRAWING TITLE

EXTERIOR DETAILS

SCALE	1 1/2" = 1'-0"
DRAWN	JRH
CHECKED	JKF
DATE	1-6-2025
PROJECT NO.	2024-10
DRAWING NO	A6.1

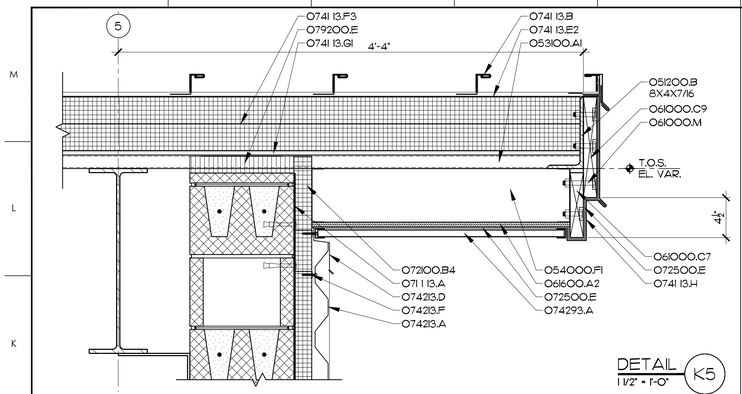

DETAIL K5
1 1/2" = 1'-0"

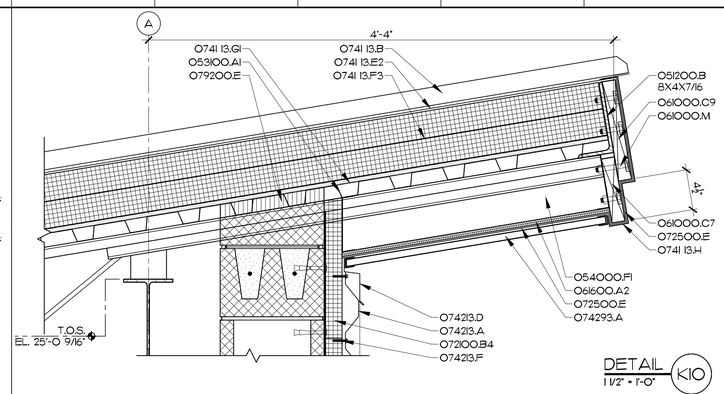

DETAIL K10
1 1/2" = 1'-0"

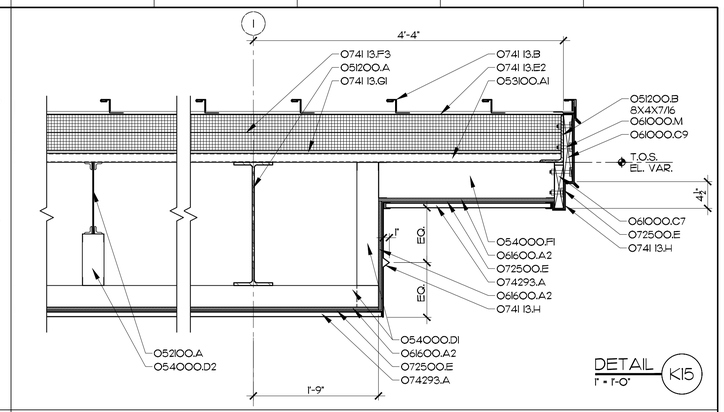

DETAIL K15
1" = 1'-0"

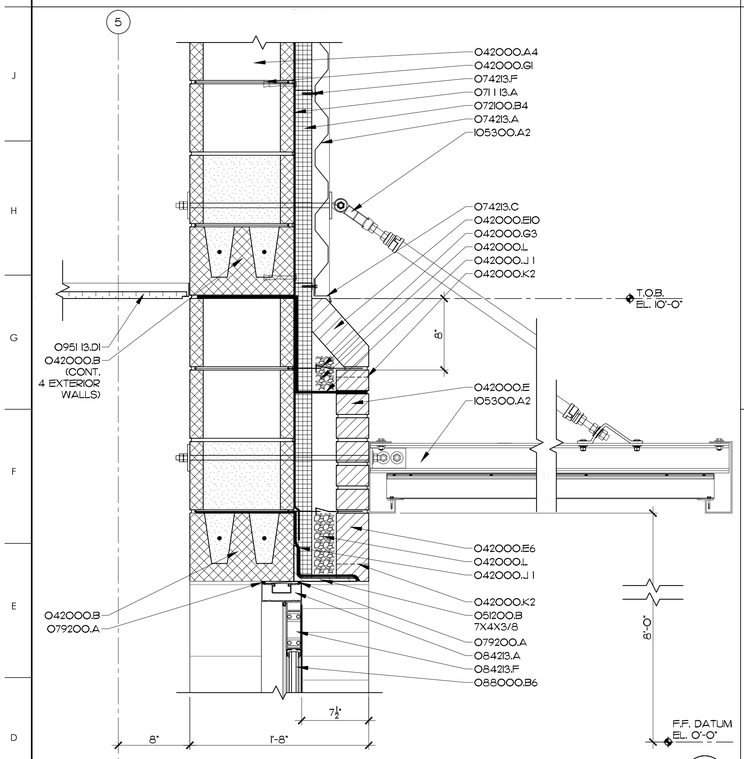

DETAIL D5
1 1/2" = 1'-0"

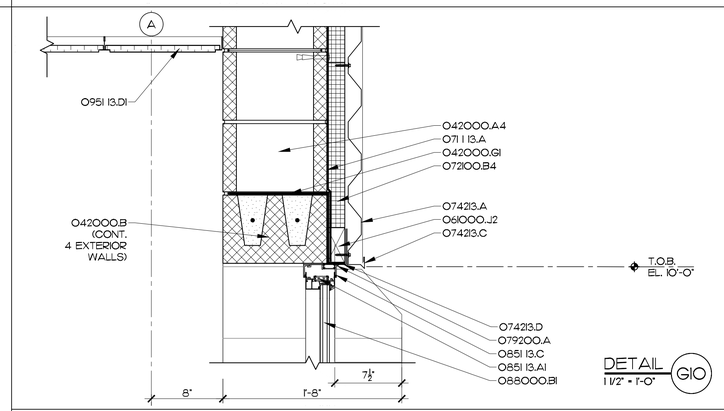

DETAIL G10
1 1/2" = 1'-0"

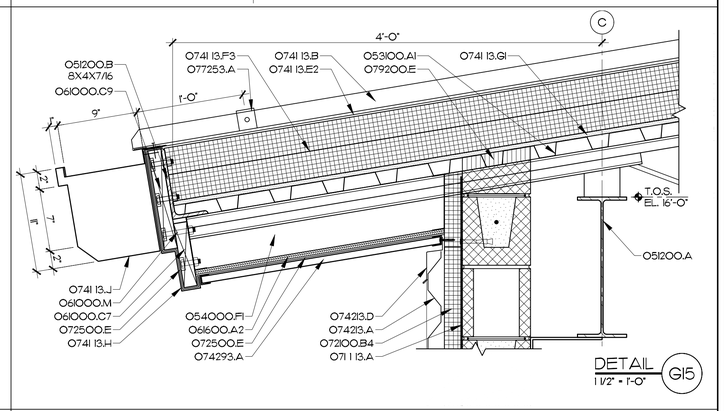

DETAIL G15
1 1/2" = 1'-0"

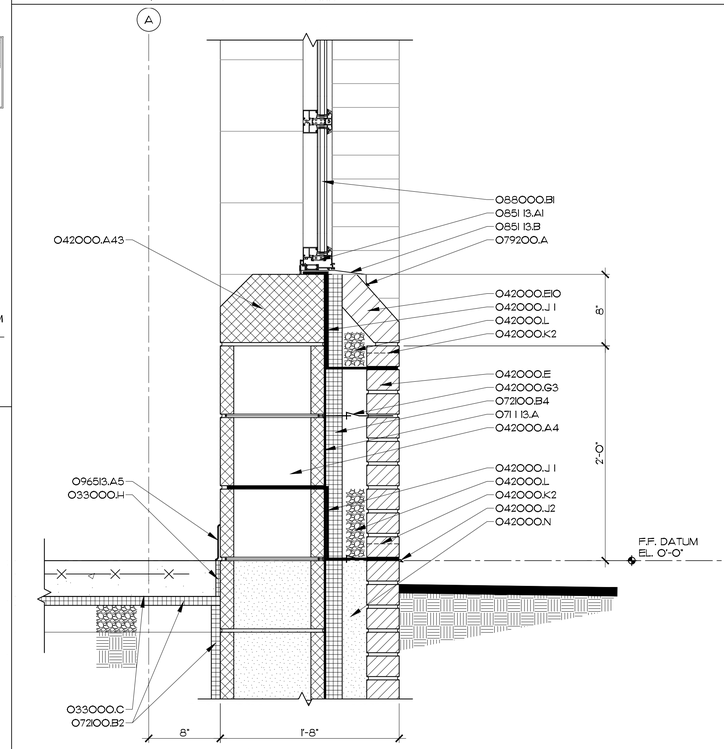

DETAIL A10
1 1/2" = 1'-0"

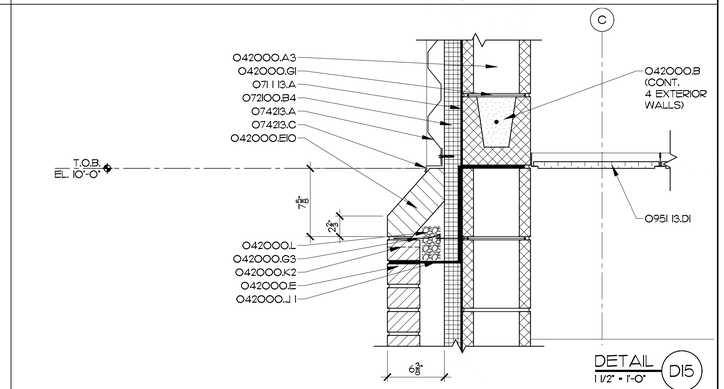

DETAIL D15
1 1/2" = 1'-0"

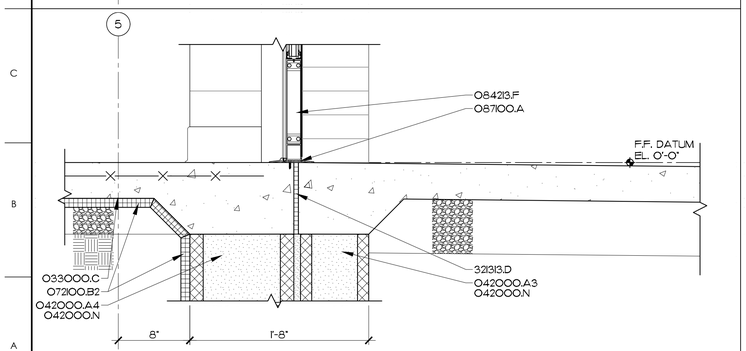

DETAIL A5
1 1/2" = 1'-0"

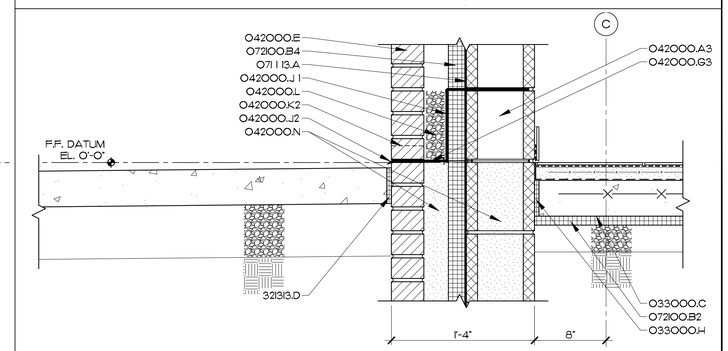

DETAIL A15
1 1/2" = 1'-0"

MATERIALS KEYING LEGEND

033000.C	-VAPOR BARRIER
033000.H	-COMPRESSIBLE FILL
042000.A3	-CONCRETE MASONRY UNIT, 8"
042000.A4	-CONCRETE MASONRY UNIT, 12"
042000.A43	-CONCRETE MASONRY UNIT, 12" SOLID BEVELED
042000.B	-CONCRETE MASONRY, BOND BEAM
042000.E	-FACE BRICK
042000.E6	-FACE BRICK, SHELF BRICK, SOLDIER COURSE
042000.E10	-FACE BRICK, SOLDIER COURSE SILL, SPECIAL SHAPE
042000.GI	-HORIZONTAL JOINT REINFORCING AT 16" O.C. VERT.
042000.G3	-HORIZONTAL JOINT REINF. AT 16" VERT. & BRICK TIE EYES AT 24" O.C. HORIZ.
042000.J1	-THRU-WALL FABRIC FLASHING
042000.J2	-METAL DRIP FLASHING
042000.K2	-WEEP SLOTS AT 16" O.C.
042000.L	-CAVITY DRAINAGE MATERIAL
042000.N	-GROUT SOLID
051200.A	-STRUCTURAL STEEL, SEE STRUCTURAL DRAWINGS
051200.B	-STEEL ANGLE, SIZE AS INDICATED
052100.A	-STEEL BAR JOIST, SEE STRUCTURAL DRAWINGS
053100.A1	-ROOF DECK, 1 1/2"
054000.D1	- COLD FORMED METAL FRAMING, 3-5/8" STUD AT 16" O.C.
054000.D2	- COLD FORMED METAL FRAMING, 3-5/8" STUD AT 24" O.C.
054000.F1	-COLD FORMED METAL FRAMING, 6" STUD AT 16" O.C.
061000.C7	-TREATED 2X8
061000.C9	-TREATED 2X12
061000.J2	-WOOD BLOCKING, PRESSURE TREATED
061000.M	-1/2" DIA. BOLT COUNTERSUNK AT 16" O.C. STAGGERED
061600.A2	-PLYWOOD SHEATHING, 1/2" THICK
07113.A	-BITUMINOUS DAMPROOFING
072100.B2	-1" RIGID INSULATION
072100.B4	-2" RIGID INSULATION
072500.E	-BUILDING WRAP
07413.B	-METAL ROOF, STANDING SEAM PANEL
07413.E2	-SELF ADHERING SHEET
07413.F3	-RIGID INSULATION, 6" THICK
07413.GI	-GLASS-MAT GYP. SHEATHING, 1/2" THICK
07413.H	-METAL FASCIA
07413.J	-METAL GUTTER
074213.A	-METAL WALL PANEL
074213.C	-METAL SILL FLASHING
074213.D	-METAL CLOSURE TRIM
074213.F	-2" METAL Z-FURRING CHANNEL, 16" O.C.
074293.A	-METAL SOFFIT PANELS
077253.A	-SNOW GUARD
079200.A	-SEALANT
079200.E	-COMPRESSIVE FILL
084213.A	-STOREFRONT FRAMING, THERMALLY BROKEN
084213.F	-ALUMINUM STILE & RAIL DOOR
085113.A1	-ALUMINUM WINDOW ASSEMBLY, FIXED WINDOW
085113.B	-METAL SILL PAN
085113.C	-METAL SUB FRAME
087100.A	-THERMAL BREAK THRESHOLD
088000.B1	-1" INSULATING GLASS-LOW E
088000.B6	-1" INSULATING GLASS, TEMPERED LOW E
095113.D1	-ACOUSTICAL PANEL CEILING TILE, 2X2
096513.A5	-4" RESILIENT TOP SET BASE
105300.A2	-ALUMINUM CANOPY ASSEMBLY WITH SUPPORT RODS
321313.D	-COMPRESSIBLE FILL

GENERAL NOTES

SCO ID #23-27044-01A

NO	REVISION	DATE

SEAL

JOHN K. FARKAS
REGISTERED ARCHITECT
9/23/2025
SEAL
GREENVILLE, N.C.

JKF
ARCHITECTURE

625 LYNNDALE CT., SUITE F, GREENVILLE, NC 27858 252-355-1068

BEAUFORT COUNTY
COMMUNITY COLLEGE
INDUSTRIAL TRAINING CENTER
AURORA, NC

DRAWING TITLE
EXTERIOR DETAILS

SCALE: AS NOTED	DRAWING NO: A6.2
DRAWN: JRH	
CHECKED: JKF	
DATE: 1-6-2025	
PROJECT NO.: 2024-10	

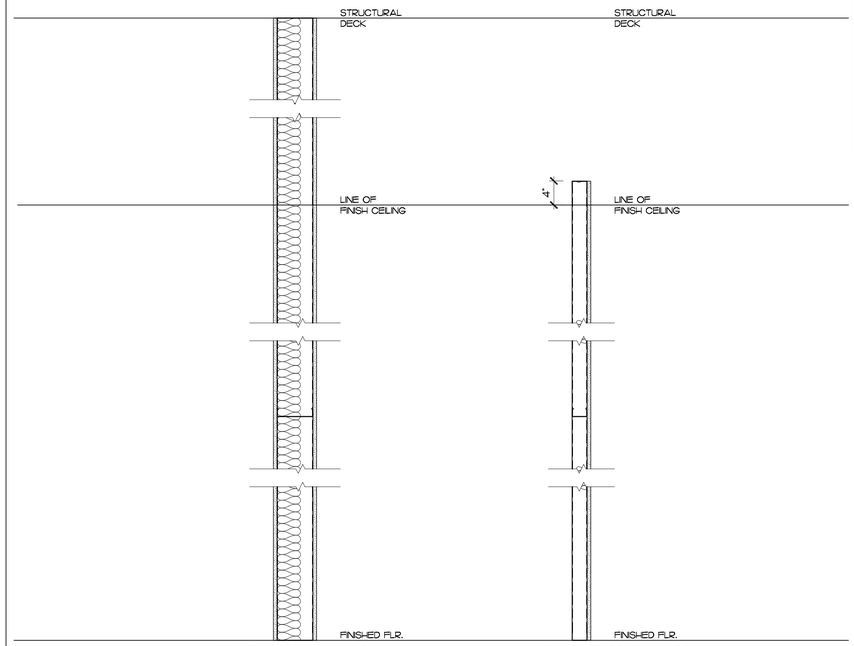

10 6" METAL STUDS (0.0312") AT 16" O.C. & 4" SOUND ATTENUATION BLANKET W/ 5/8" GYPSUM BOARD BOTH SIDES TO DECK. SEAL TIGHT TO DECK.

54 2-1/2" METAL STUDS (0.0179") AT 16" O.C. W/ 5/8" GYPSUM BOARD ONE SIDE TO 4" ABOVE FINISHED CEILING (APC). BRACE TOP OF STUD TO ADJACENT WALL OR STRUCTURE.

PARTITION TYPES BY SYSTEM:

0-9	CMU
10-19	METAL STUD/ SINGLE LAYER GYPSUM
20-29	METAL STUD/ DOUBLE LAYER GYPSUM
30-39	METAL STUD/ TRIPLE LAYER GYPSUM
40-49	METAL STUD/ SHAFTWALL/ CHASE
50-59	METAL FURRED/ ONE-SIDED GYPSUM
60-69	WOOD STUD/ SINGLE LAYER GYPSUM

WALL TYPES G15
1" = 1'-0"

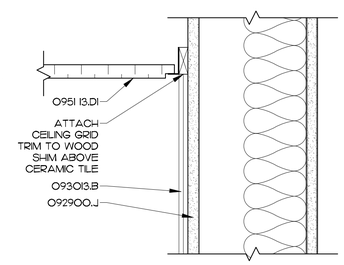

CERAMIC TILE - CEILING TRANSITION D12
3" = 1'-0"

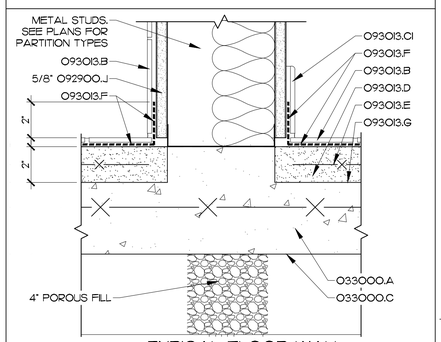

TYPICAL FLOOR-WALL WATERPROOFING DETAIL A12
3" = 1'-0"

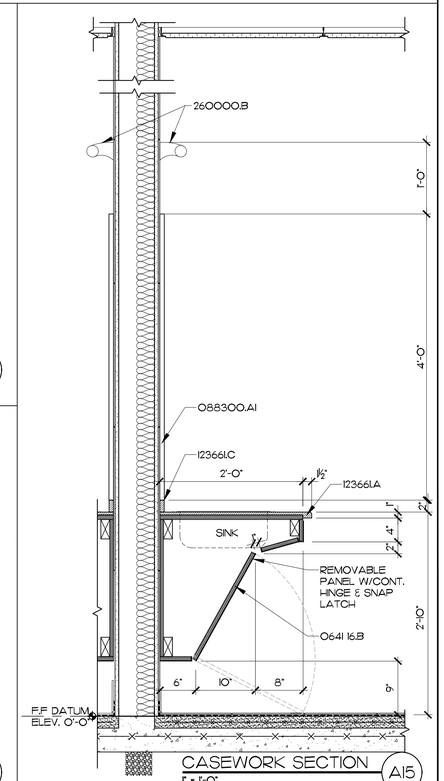

CASEWORK SECTION A15
1" = 1'-0"

MATERIALS KEYING LEGEND

033000.A	-	CONCRETE SLAB ON GRADE, SEE STRUCTURAL
033000.C	-	VAPOR BARRIER
0641 16.B	-	PLASTIC LAMINATE, 3/4" THICK
088300.A1	-	1/4" GLASS MIRROR
092900.J	-	CEMENTITIOUS BACKER UNIT
09313.B	-	CERAMIC TILE
09313.C1	-	CERAMIC TILE, SPECIAL SHAPE, COVE BASE, 4" HIGH
09313.D	-	MORTAR BED
09313.E	-	REINFORCING MESH
09313.F	-	WATERPROOFING MEMBRANE
09313.G	-	CLEAVAGE MEMBRANE
0951 13.D1	-	ACOUSTICAL PANEL CEILING TILE, 2X2
12366L.A	-	SIMULATED STONE COUNTERTOP
12366L.C	-	SIMULATED STONE BACKSPLASH
260000.B	-	INTERIOR LIGHT FIXTURE

GENERAL NOTES

1. PROVIDE MOISTURE-RESISTANT GYPSUM BOARD IN ALL TOILET ROOMS, JANITORS CLOSETS, MECHANICAL ROOMS & WET AREAS IN LIEU OF GYPSUM BOARD INDICATED IN PARTITION TYPES.
2. PROVIDE CEMENTIOUS TILE BACKING PANEL IN LIEU OF GYPSUM BOARD WHERE CERAMIC WALL TILE IS SCHEDULED.

KEY PLAN

SCO ID #23-27044-01A

NO	REVISION	DATE

SEAL
JOHN K. FARKAS REGISTERED ARCHITECT 1/23/2025 GREENVILLE, N.C.

JKF ARCHITECTURE
625 LYNNDALE CT., SUITE F, GREENVILLE, NC 27858 252-355-1068

BEAUFORT COUNTY COMMUNITY COLLEGE INDUSTRIAL TRAINING CENTER
AURORA, NC

DRAWING TITLE
WALL TYPES, SECTIONS & DETAILS

SCALE: AS NOTED	DRAWING NO: A7.1
DRAWN: JRH	
CHECKED: JKF	
DATE: 1-6-2025	
PROJECT NO.: 2024-10	

WINDOW SCHEDULE

WINDOW GROUP NO.	WINDOW UNIT SIZE (W X H)	WINDOW TYPE	MATERIAL	FINISH	FRAME ELEVATION	UNIT THICKNESS	DETAILS J	DETAILS H	DETAILS S	GLASS	FIRE RATING (HRS)	REMARKS
WI	4'-0" X 7'-4"	FIXED	AL	AN	WI	3 1/4"	E3 / A6.1	G10 / A6.2	A10 / A6.2	1" LOW E	-	

WINDOW TYPES

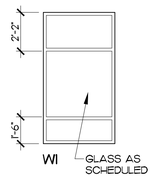

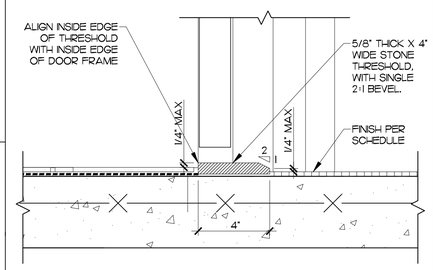

CERAMIC TILE THRESHOLD DETAIL — H7
3" = 1'-0"

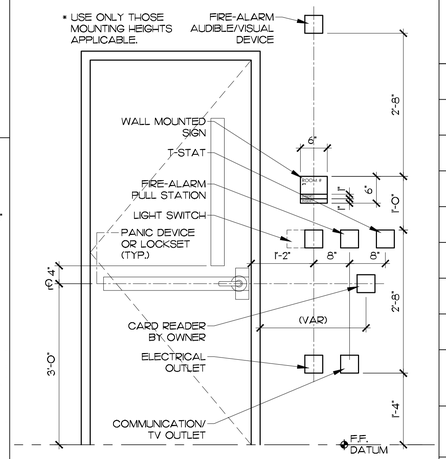

TYP. MOUNTING HEIGHTS — H10
3/4" = 1'-0"

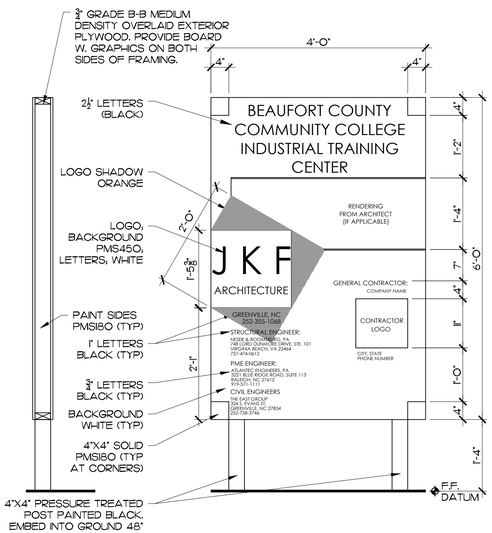

PROJECT SIGN — E4
3/4" = 1'-0"

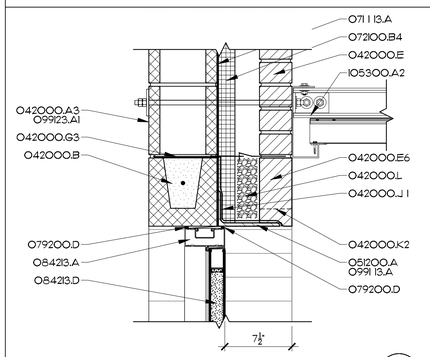

HEAD DETAIL — E7
1 1/2" = 1'-0"

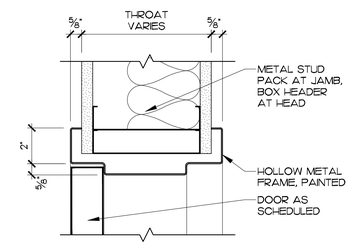

HEAD/JAMB DETAIL — E10
3" = 1'-0"

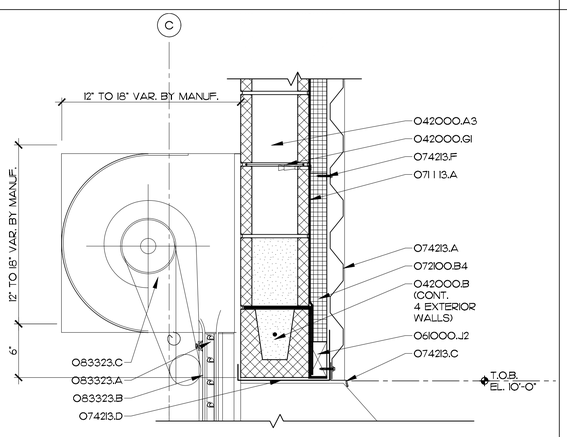

HEAD DETAIL — E4
1 1/2" = 1'-0"

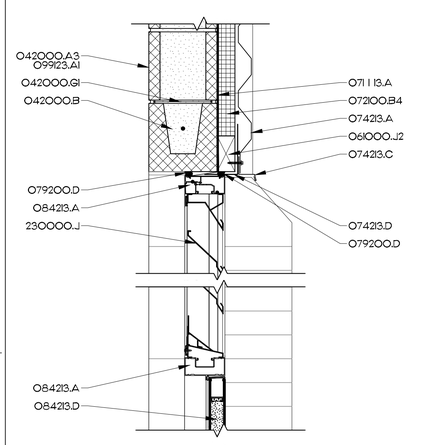

HEAD DETAIL — A7
1 1/2" = 1'-0"

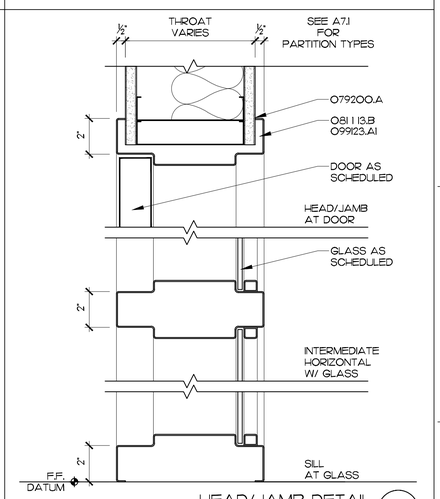

HEAD/JAMB DETAIL — A10
3" = 1'-0"

DOOR SCHEDULE

DOOR GROUP NO.	DOOR OPENING SIZE (W X H)	DOOR TYPE	DOOR THICKNESS (1-3/4" U.N.O.)	DOOR MATERIAL	DOOR FINISH	FRAME ELEVATION	FRAME MATERIAL	FRAME FINISH	DETAILS J	DETAILS H	DETAILS S	GLASS	FIRE RATING (HRS)	REMARKS
1	3'-0" X 7'-2"	C	1-3/4"	AL	AN	F4	AL	AN	J6/J9 / A6.1	D5 / A6.2	A5 / A6.2	1" LOW-E TEMP.	-	
2	3'-0" X 7'-2"	B	1-3/4"	AL	FRP	F1	AL	AN	A9 / A6.1	SM. TO D5 / A6.2	SM. TO A5 / A6.2	1" LOW-E TEMP.	-	
3	3'-0" X 7'-2"	B	1-3/4"	AL	FRP	F1	AL	AN	A12 / A6.1	E7	SM. TO A5 / A6.2	1" LOW-E TEMP.	-	
4	(2) 3'-0" X 7'-2"	AA	1-3/4"	AL	FRP	F3	AL	AN	SM. TO A12 / A6.1	A7	SM. TO A5 / A6.2	-	-	-
5	3'-0" X 7'-2"	A	1-3/4"	HM	TF	F4	HM	P	A10	A10	A10	1/4" TEMP.	-	
6	12'-0" X 10'-0"	D	1"	SS	SS	F6	SS	SS	E12 / A6.1	E4	-	-	-	ELECTRICALLY OPERATED OVERHEAD COILING DOOR
7	3'-0" X 7'-2"	A	1-3/4"	HM	TF	F5	HM	P	A10	A10	A10	1/4" TEMP.	-	FROSTED TEMPERED GLASS AS INDICATED
8	3'-0" X 7'-2"	A	1-3/4"	HM	TF	F1	HM	P	E10	E10	H7	-	-	-

DOOR TYPES

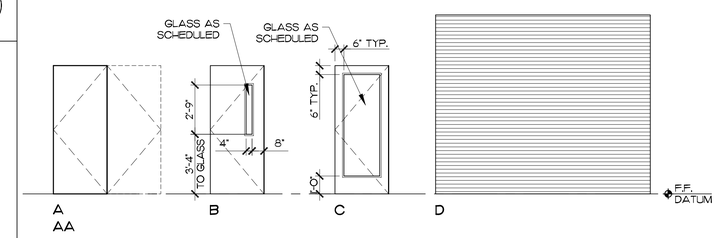

FRAME TYPES

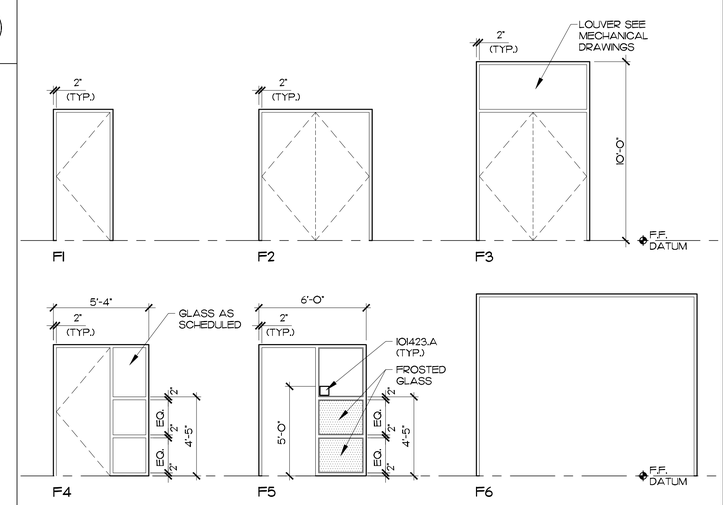

DOOR AND FRAME ELEVATIONS — A15
1/4" = 1'-0"

MATERIALS KEYING LEGEND

042000.A3	CONCRETE MASONRY UNIT, 8"
042000.B	CONCRETE MASONRY, BOND BEAM
042000.E	FACE BRICK
042000.E6	FACE BRICK, SHELF BRICK, SOLDIER COURSE
042000.G1	HORIZONTAL JOINT REINFORCING AT 16" O.C. VERT.
042000.G3	HORIZONTAL JOINT REINF. AT 16" VERT. & BRICK TIE EYES AT 24" O.C. HORIZ.
042000.J1	THRU-WALL FABRIC FLASHING
042000.K2	WEEP SLOTS AT 16" O.C.
042000.L	CAVITY DRAINAGE MATERIAL
051200.A	STRUCTURAL STEEL, SEE STRUCTURAL DRAWINGS
051200.B	STEEL ANGLE, SIZE AS INDICATED
061000.J2	WOOD BLOCKING, PRESSURE TREATED
071113.A	BITUMINOUS DAMPROOFING
072100.B4	2" RIGID INSULATION
074213.A	METAL WALL PANEL
074213.C	METAL SILL FLASHING
074213.D	METAL CLOSURE TRIM
079200.A	SEALANT
074213.F	2" METAL Z-FURRING CHANNEL, 16" O.C.
079200.D	BACKER ROD & SEALANT
081113.B	HOLLOW METAL FRAME
083323.A	OVERHEAD COILING DOOR
083323.B	OVERHEAD COILING DOOR, METAL TRACK
083323.C	OVERHEAD COILING DOOR, METAL HOUSING
084213.A	STOREFRONT FRAMING, THERMALLY BROKEN
084213.D	ALUMINUM FRP DOOR
099113.A	PAINT FINISH, EXTERIOR SYSTEM
099123.A1	PAINT FINISH, INTERIOR SYSTEM
101423.A	PANEL SIGN
105300.A2	ALUMINUM CANOPY ASSEMBLY WITH SUPPORT RODS
230000.J	MECH. LOUVER-SEE HVAC DRAWINGS

GENERAL NOTES

KEY PLAN

SCO ID #23-27044-01A

NO	REVISION	DATE

SEAL: JOHN K. FARKAS, REGISTERED ARCHITECT, 5824, STATE OF NORTH CAROLINA, GREENVILLE, N.C. — 1/23/2025

JKF ARCHITECTURE

625 LYNNDALE CT., SUITE F, GREENVILLE, NC 27858 252-355-1068

BEAUFORT COUNTY COMMUNITY COLLEGE INDUSTRIAL TRAINING CENTER
AURORA, NC

DRAWING TITLE: DOOR & WINDOW SCHEDULE & DETAILS

SCALE	AS NOTED
DRAWN	JRH
CHECKED	JKF
DATE	1-6-2025
PROJECT NO.	2024-10
DRAWING NO	A8.1

GENERAL NOTES:

NRW ENGINEERING
Structural Consultants
748 Lord Dunmore Drive, Suite 101
Virginia Beach, VA 23464
Phone 757-474-0912
Fax 757-474-0919
NC license C-1393

2018 APPENDIX B
BUILDING CODE SUMMARY FOR ALL COMMERCIAL PROJECTS
STRUCTURAL DESIGN

DESIGN LOADS:

IMPORTANCE FACTORS:

WIND	(I_W)	1.0
SNOW	(I_S)	1.0
SEISMIC	(I_E)	1.0

LIVE LOADS: ROOF 20 PSF
SLAB ON GRADE 150 PSF

GROUND SNOW LOAD: 10 PSF

WIND LOAD: ULTIMATE WIND SPEED 131 MPH (ASCE-7)
EXPOSURE CATEGORY C

SEISMIC DESIGN CATEGORY: B
RISK CATEGORY (TABLE 1604.5) II
SPECTRAL RESPONSE ACCELERATION S_S .113G S_1 .058G
SITE CLASSIFICATION (ASCE 7): D
DATA SOURCE: GEOTECHNICAL EXPLORATION REPORT
BASIC STRUCTURAL SYSTEM: ORDINARY MASONRY SHEAR WALLS
ANALYSIS PROCEDURE: EQUIVALENT LATERAL FORCE
ARCHITECTURAL, MECHANICAL, COMPONENTS ANCHORED: AS REQUIRED BY CHAPTER 13 OF ASCE 7-10.

LATERAL DESIGN CONTROL: WIND LOADS

SOIL BEARING CAPACITIES:
1,500 PSF

GENERAL NOTES:

1. ALL WORK SHALL COMPLY WITH THE CODES LISTED BELOW AND IN THE SPECIFICATIONS.
2. THIS STRUCTURE HAS BEEN DESIGNED IN ACCORDANCE WITH THE PROVISIONS OF THE INTERNATIONAL BUILDING CODE, 2015 EDITION, AS ADOPTED BY THE 2018 NORTH CAROLINA STATE BUILDING CODE, EFFECTIVE JANUARY 01, 2019.
3. VERIFY ALL DRAWINGS FOR COORDINATION BETWEEN TRADES, LOCATE SLOTS, SLEEVES AND TRENCHES AS REQUIRED FOR MECHANICAL TRADES. PROVIDE AND INSTALL ANCHORS, INSERTS, HANGERS, ETC. AS REQUIRED FOR VARIOUS TRADES.
4. SUBMIT SHOP DRAWINGS FOR APPROVAL BEFORE PROCEEDING WITH THE WORK. THE CONTRACTOR MUST CHECK ALL DIMENSIONS AND ACCEPT FULL RESPONSIBILITY FOR DIMENSIONAL CORRECTNESS.
5. UNDER NO CIRCUMSTANCES CAN THE REPRODUCTION OF CONTRACT DRAWINGS BE USED AS SHOP DRAWINGS.
6. PROVIDE ALL TEMPORARY GUYING AND BRACING REQUIRED TO ERECT AND HOLD THE STRUCTURE IN PROPER ALIGNMENT UNTIL ALL STRUCTURAL WORK AND CONNECTIONS HAVE BEEN COMPLETED.
7. LOADING APPLIED TO THE STRUCTURE DURING THE PROCESS OF CONSTRUCTION MUST NOT EXCEED THE SAFE LOAD-CARRYING CAPACITY OF THE STRUCTURAL MEMBERS. THE LIVE LOADINGS USED IN THE DESIGN OF THIS STRUCTURE ARE INDICATED IN THE "DESIGN CRITERIA". DO NOT APPLY ANY CONSTRUCTION LOADS UNTIL ALL STRUCTURAL FRAMING IS PROPERLY CONNECTED TOGETHER AND UNTIL ALL TEMPORARY BRACING IS IN PLACE.
8. IN ACCORDANCE WITH GENERALLY ACCEPTED CONSTRUCTION PRACTICES, CONTRACTOR WILL BE SOLELY AND COMPLETELY RESPONSIBLE FOR CONDITION OF JOB SITE INCLUDING SAFETY OF ALL PERSONS AND PROPERTY DURING PERFORMANCE OF THE WORK.
9. THE DUTY OF THE ARCHITECT IN CONDUCTING CONSTRUCTION REVIEW OF CONTRACTOR'S PERFORMANCE IS NOT INTENDED TO INCLUDE REVIEW OF ADEQUACY OF CONTRACTOR'S SAFETY MEASURES IN, ON, OR NEAR THE CONSTRUCTION SITE.
10. TYPICAL DETAILS AND GENERAL NOTES APPLY TO ALL PARTS OF THE JOB EXCEPT WHERE SPECIFICALLY DETAILED OR NOTED OTHERWISE.
11. STRUCTURAL DRAWINGS SHOW ONLY THE BASIC STRUCTURAL FRAMING. REFER TO ARCHITECTURAL, MECHANICAL AND ELECTRICAL DRAWINGS FOR NON-STRUCTURAL ITEMS WHICH REQUIRE SPECIAL PROVISIONS DURING THE CONSTRUCTION OF THE STRUCTURAL FRAME.
12. INFORM THE PROFESSIONAL OF RECORD IN WRITING OF ANY DEVIATION FROM THE CONTRACT DOCUMENTS. THE CONTRACTOR IS NOT RELIEVED OF THE RESPONSIBILITY OF SUCH DEVIATION BY THE PROFESSIONAL OF RECORD REVIEW OF SHOP DRAWINGS, PRODUCT DATA, ETC. UNLESS THE CONTRACTOR HAS SPECIFICALLY INFORMED THE PROFESSIONAL OF RECORD OF SUCH DEVIATION AT THE TIME OF SUBMISSION, AND THE PROFESSIONAL OF RECORD HAS GIVEN WRITTEN APPROVAL TO THE SPECIFIC DEVIATION.

FOUNDATION NOTES:

1. FOUNDATIONS FOR THIS STRUCTURE HAVE BEEN DESIGNED IN ACCORDANCE WITH THE RECOMMENDATIONS IN THE GEOTECHNICAL EXPLORATION REPORT, PREPARED BY TERRACON CONSULTANTS, INC DATED SEPTEMBER 3, 2024.
2. PERFORM ALL EARTHWORK IN ACCORDANCE WITH THE SPECIFICATIONS.
3. THE ENTIRE STRUCTURE SHALL BE FOUNDED ON VERY WELL COMPACTED STRUCTURAL FILL OR UNDISTURBED SOIL WITH A DESIGN BEARING PRESSURE OF 1500 P.S.F.
4. PRIOR TO PLACING FOUNDATION CONCRETE, ALL FOUNDATION EXCAVATIONS SHALL BE INSPECTED BY THE GEOTECHNICAL ENGINEER TO VERIFY THE EXTENT OF ANY LOOSE, SOFT, OR UNSATISFACTORY SOIL AND TO VERIFY THE DESIGN BEARING PRESSURE. THE GEOTECHNICAL ENGINEER WILL PROVIDE DIRECTION FOR CORRECTIVE ACTION WHERE REQUIRED.
5. DO NOT INSTALL FOUNDATION WORK UNTIL IT HAS BEEN COORDINATED WITH ADJACENT UNDERGROUND UTILITIES. FOOTINGS SHALL BE SLEEVED OR LOWERED WHERE REQUIRED. DO NOT INSTALL UTILITIES UNDER ISOLATED COLUMN FOOTINGS. INSTALL UTILITIES PERPENDICULAR TO WALL FOOTINGS. INSTALL SLEEVES TO ACCOMMODATE PLUMBING OR UTILITY LINES PRIOR TO POURING FOOTING CONCRETE OR LOWER FOOTINGS SO PLUMBING OR UTILITY LINES OCCUR OVER THE TOP OF THE FOOTINGS. REFER TO TYPICAL DETAILS.
6. DO NOT PUT IN UNBALANCED BACKFILL AGAINST FOUNDATION WALLS UNLESS WALLS ARE SECURELY BRACED AGAINST OVERTURNING.
7. FROST LINE DEPTH IS 12" BELOW GRADE. BOTTOM OF EXTERIOR FOUNDATIONS SHALL BEAR A MINIMUM OF 12" BELOW FINAL GRADE. LOWER FOOTINGS AS REQUIRED TO MAINTAIN COVERAGE.

CAST IN PLACE CONCRETE NOTES:

1. CAST IN PLACE CONCRETE MUST COMPLY WITH THE AMERICAN CONCRETE INSTITUTE (ACI- 318-14), COMMENTARY, (ACI-318R-14), AND THE SPECIFICATIONS FOR STRUCTURAL CONCRETE (ACI 301).
2. DETAILING OF ALL CONCRETE STEEL REINFORCEMENT MUST BE IN ACCORDANCE WITH THE MANUAL OF STANDARD PRACTICE FOR DETAILING REINFORCED CONCRETE STRUCTURES (ACI-315).
3. ALL CONCRETE MUST BE NORMAL WEIGHT, UNLESS OTHERWISE NOTED, CONCRETE HAVING A MINIMUM COMPRESSIVE STRENGTH AT 28 DAYS AS FOLLOWS:
   A) INTERIOR SLAB ON GRADE 4,000 PSI
   B) FOUNDATIONS 3,000 PSI
   C) CONCRETE NOT OTHERWISE NOTED 4,500 PSI
   D) CONCRETE EXPOSED TO WEATHER MUST BE AIR ENTRAINED.
4. ALL REINFORCING MUST BE AS FOLLOWS:
   A) REINFORCING BARS – ASTM A-615, GRADE 60
   B) WELDED REINFORCING BARS – ASTM A706, GRADE 60
   C) WELDED WIRE REINFORCEMENT – ASTM A-1064 FLAT SHEET TYPE, ROLL TYPE NOT ACCEPTABLE.
5. WELDED WIRE REINFORCEMENT MUST BE PROPERLY SUPPORTED PRIOR TO PLACING CONCRETE. HOOKING OF FABRIC IS NOT PERMITTED.
6. UNLESS OTHERWISE NOTED, REINFORCING STEEL MARKED CONTINUOUS (CONT.) MUST BE LAPPED PER THE REINFORCING LAP SCHEDULE.
7. HOLD ALL REINFORCING STEEL SECURELY IN PLACE TO PREVENT DISLOCATION DURING THE POURING OPERATION. SUPPORT SLAB REINFORCING BARS ON HIGH CHAIRS AND BAR SPACERS OF SUITABLE DESIGN, OR CONCRETE BLOCKS HAVING THE SAME MINIMUM COMPRESSIVE STRENGTH OF THE CONCRETE SLAB.
8. DO NOT PLACE CONCRETE UNTIL ALL EMBEDDED WORK HAS BEEN INSTALLED, TESTED AND INSPECTED.
9. EXCEPT AS OTHERWISE SHOWN MINIMUM PROTECTION (CONCRETE COVER) FOR REINFORCING STEEL MUST BE AS FOLLOWS:

   CONCRETE SURFACES CAST AGAINST SOIL: 3"
   CONCRETE SURFACES EXPOSED TO EARTH OR WEATHER: 2"
   INTERIOR CONCRETE SURFACES: 1" FOR SLABS

OPEN WEB STEEL JOIST NOTES:

1. OPEN-WEB STEEL JOIST MUST COMPLY WITH THE STANDARD SPECIFICATION FOR OPEN WEB JOISTS OF THE STEEL JOIST INSTITUTE (SJI), LATEST EDITION.
2. OPEN-WEB STEEL JOIST MUST HAVE A MINIMUM BEARING LENGTH AS FOLLOWS:
   ON STEEL – 'K' SERIES = 4"
   ON MASONRY – AS DETAILED
3. WELD ALL STEEL JOISTS WHEREVER THEY BEAR ON STRUCTURAL STEEL MEMBERS, IN ACCORDANCE WITH THE S.J.I AND THE A.I.S.C SPECIFICATIONS
4. PREPARE AND SUBMIT SHOP DRAWINGS INDICATING THE JOIST LAYOUT, SPECIAL CONNECTIONS, AND ACCESSORIES. INCLUDE MARK, NUMBER, TYPE, LOCATION, AND SPACING OF JOISTS AND BRIDGING.
5. THE JOIST MANUFACTURER IS RESPONSIBLE FOR CONTINUOUS JOIST BRIDGING LINES SATISFYING THE REQUIREMENTS OF THE SJI SPECIFICATION FOR THE TOP AND BOTTOM CHORDS OF ALL STEEL JOISTS, AS WELL AS ANY ADDITIONAL BRIDGING / BRACING SHOWN ON THE DRAWINGS OR REQUIRED FOR JOISTS SUBJECTED TO NET UPLIFT OF OTHER SPECIAL LOADS. PROVIDE JOIST BRIDGING REQUIRED AT CHANGES OF JOIST DEPTHS AND AT ENDS OF ALL BRIDGING LINES UNLESS SUCH ENDS ARE PROPERLY ANCHORED INTO THE INTERSECTING INTERIOR OR END WALLS.
6. REFER TO DESIGN CRITERIA NOTES FOR NET UPLIFT LOAD ON ROOF JOISTS. A SINGLE LINE OF BOTTOM CHORD BRIDGING MUST BE PROVIDED NEAR THE FIRST BOTTOM CHORD PANEL POINTS WHENEVER UPLIFT LOADS OCCUR.
7. INSTALL JOIST BRIDGING AND CONNECTIONS COMPLETELY PRIOR TO PLACING ANY CONSTRUCTION LOADS ON THE JOISTS. CONSTRUCTION LOADING MUST NOT EXCEED THE JOIST DESIGN LOAD.
8. REINFORCE CONCENTRATED LOADS EXCEEDING 100 POUNDS AND NOT LOCATED AT JOIST PANEL POINTS PER THE TYPICAL DETAIL.
9. DO NOT APPLY PAINT OR PRIMER ON STEEL JOISTS OR ACCESSORIES RECEIVING SPRAYED FIRE- RECEIVING MATERIALS. SEE THE ARCHITECTURAL DRAWINGS FOR EXTENTS OF SPRAYED FIRE RESISTIVE MATERIALS.

STRUCTURAL STEEL NOTES:

1. STRUCTURAL STEEL MUST COMPLY WITH THE FOURTEENTH EDITION OF THE AMERICAN INSTITUTE OF STEEL CONSTRUCTION (AISC 360-10) "SPECIFICATION FOR STRUCTURAL STEEL BUILDINGS".
2. STRUCTURAL STEEL MUST BE NEW, CLEAN, AND STRAIGHT, AND CONFORM TO THE FOLLOWING:
   A) STEEL W- AND WT SHAPES – ASTM A992, GRADE 50
   B) RECTANGULAR AND SQUARE HSS SHAPES – ASTM A500, GRADE C
   C) ANCHOR RODS – ASTM F1554, GRADE 36
   D) HIGH STRENGTH BOLTS – ASTM A325
   E) ALL OTHER STEEL SHAPES – ASTM A36, UNLESS OTHERWISE NOTED
3. UNLESS OTHERWISE NOTED, ALL CONNECTIONS MUST BE STANDARD SHEAR BEAM CONNECTIONS. THE FABRICATOR IS RESPONSIBLE FOR DESIGNING ALL CONNECTIONS. WHERE REACTIONS ARE NOT INDICATED ON PLAN, CONNECTIONS MUST BE DESIGNED FOR ½ OF THE TOTAL ALLOWABLE UNIFORM LOAD FOR LATERALLY SUPPORTED BEAMS GIVEN IN PART 3 OF THE "STEEL CONSTRUCTION MANUAL" 14TH EDITION. CONNECTION DETAILS MUST BE IN ACCORDANCE WITH AISC STANDARDS.
4. UNLESS OTHERWISE NOTED WELD ALL SHOP CONNECTIONS AND BOLT ALL FIELD CONNECTIONS. THE FABRICATOR IS RESPONSIBLE FOR THE DESIGN OF ALL CONNECTIONS. REFER TO SPECIFICATIONS.
5. SHOW ALL HOLES REQUIRED IN STRUCTURAL STEEL MEMBERS FOR PIPING ON THE SHOP DRAWINGS AND MAKE THEM IN THE SHOP. DO NOT CUT HOLES IN THE FIELD WITHOUT THE APPROVAL OF THE REGISTERED DESIGN PROFESSIONAL OF RECORD.
6. WELDING MUST COMPLY WITH THE "STRUCTURAL WELDING CODE – STEEL" (AWS D1.1). WELD ELECTRODES MUST BE E70XX.UNLESS OTHERWISE NOTED, MINIMUM WELD SIZE MUST BE 3/16" CONTINUOUS FILLET WELDS
7. REFER TO THE ARCHITECTURAL, CIVIL, MECHANICAL, PLUMBING, AND ELECTRICAL DRAWINGS FOR ADDITIONAL STEEL (IF ANY) NOT SHOWN ON THE STRUCTURAL DRAWINGS.
8. UNLESS OTHERWISE NOTED, THE TOP OF ALL STEEL COLUMNS MUST HAVE A STEEL CAP PLATE. UNLESS OTHERWISE NOTED, MINIMUM CAP PLATE DIMENSIONS MUST MATCH COLUMN WIDTH AND DEPTH, AND MINIMUM THICKNESS MUST EQUAL COLUMN WEB THICKNESS, OR ½" MINIMUM.
9. ALL SHELF ANGLES, LINTEL ANGLES, AND OTHER ITEMS MARKED "GALVANIZED" MUST BE GALVANIZED IN ACCORDANCE TO ASTM A123 OR ASTM A153. GALVANIZE AFTER FABRICATION WHERE PRACTICAL. REPAIR DAMAGED GALVANIZED COATING USING ASTM A780 ZINC-RICH PAINT.
10. DO NOT APPLY PAINT OR PRIMER ON STRUCTURAL STEEL SURFACES RECEIVING SPRAYED FIRE-RESISTIVE MATERIALS. SEE THE ARCHITECTURAL DRAWINGS FOR EXTENTS OF SPRAYED FIRE RESISTIVE MATERIALS.

CONCRETE MASONRY NOTES:

1. MASONRY CONSTRUCTION MUST COMPLY WITH THE MASONRY SOCIETY "BUILDING CODE FOR MASONRY STRUCTURES" (TMS 402-2013) AND "SPECIFICATION FOR MASONRY STRUCTURES" (TMS 602-2013).
2. CONCRETE MASONRY UNITS MUST CONFORM TO ASTM C90 AND BE MADE WITH LIGHTWEIGHT AGGREGATE. THE COMPRESSIVE STRENGTH OF MASONRY, F'm, EXPRESSED AS FORCE PER UNIT OF NET CROSS-SECTIONAL AREA, MUST BE 2,000 PSI AT 28 DAYS.
3. MORTAR MUST CONFORM TO ASTM C270, TYPE S. AGGREGATE FOR MORTAR MUST COMPLY WITH ASTM C144.
4. GROUT MUST CONFORM TO ASTM C476 AND MUST HAVE A MINIMUM 28 DAY COMPRESSIVE STRENGTH OF 2,500 PSI. SLUMP AT POINT OF PLACEMENT MUST BE BETWEEN 8 AND 11 INCHES.
5. ALL REINFORCING BARS MUST CONFORM TO ASTM A615, GRADE 60. SHOP FABRICATED BARS SHOWN TO BE BENT OR HOOKED. BARS MUST BE LAPPED AS FOLLOWS: #4-20", #5-30", #6-54", #7-63", #8-72", #9-81".
6. REBAR DOWELS MUST BE THE SAME SIZE AND SPACING AS VERTICAL REINFORCING FROM FOUNDATION. DOWELS MUST HAVE STANDARD ACI HOOKS.
7. PROVIDE BAR POSITIONERS FOR VERTICAL REINFORCING AT A MAXIMUM SPACING OF 200 BAR DIAMETERS, AT GROUT LIFT HEIGHTS, OR BAR SPLICE LOCATIONS, WHICHEVER IS LESS.
8. GROUTING MUST BE STOPPED 1-1/2" BELOW THE TOP OF A COURSE SO AS TO FORM A KEY AT THE POUR JOINT.
9. ALL BOLTS, ANCHORS, ETC. PLACED IN THE WALL, MUST BE GROUTED SOLID INTO POSITION.
10. GROUT ALL CELLS SOLID BELOW FINISHED FIRST FLOOR.
11. HORIZONTAL JOINT REINFORCING MUST BE STANDARD 9 GAGE LADDER TYPE IN CMU WALLS AT 16" ON-CENTER. JOINT REINFORCING MUST COMPLY WITH ASTM A951.
12. DISCONTINUE ALL HORIZONTAL REINFORCING AT CONTROL JOINTS EXCEPT FOR BOND BEAMS AT JOIST BEARING ELEVATIONS. HORIZONTAL BOND BEAMS MUST HAVE CONTINUOUS REINFORCING AS SHOWN IN THE SECTIONS AND DETAILS.

MATERIALS KEYING LEGEND

GENERAL NOTES

KEY PLAN

SCO ID #23-27044-01A

NO	REVISION	DATE

SEAL
NORTH CAROLINA PROFESSIONAL SEAL 022630 ENGINEER KEVIN M. ROOMSBURG
1-23-2025

JKF ARCHITECTURE
625 LYNNDALE CT., SUITE F, GREENVILLE, NC 27858 252-355-1068

BEAUFORT COUNTY COMMUNITY COLLEGE INDUSTRIAL TRAINING CENTER
AURORA, NC

DRAWING TITLE
GENERAL NOTES

SCALE	1/8" = 1'-0"
DRAWN	JSS
CHECKED	KMR
DATE	1-6-2025
PROJECT NO.	2024-10
DRAWING NO	S0.1

GENERAL NOTES:

STEEL DECK NOTES:

1. STEEL DECK MUST CONFORM TO THE LATEST EDITION OF THE AMERICAN IRON AND STEEL INSTITUTE (AISI), "SPECIFICATION FOR THE DESIGN OF COLD-FORMED STEEL STRUCTURAL STEEL MEMBERS" AND THE STEEL DECK INSTITUTE (SDI) "DESIGN MANUAL FOR COMPOSITE DECKS, FORM DECKS AND ROOF DECKS".

2. ATTACH ROOF DECK TO SUPPORTS WITH ⅝" DIAMETER ARC SPOT WELDS IN ALL RIBS WHERE SIDELAPS OCCUR AND AT 12 INCHES ON CENTER ALONG SUPPORTS. FASTEN ADJACENT DECK UNITS ALONG SIDELAPS WITH #10 SELF TAPPING HEX HEAD SCREWS AT 1/3 POINTS BETWEEN SUPPORTS. FASTEN EDGEMOST DECK PANEL TO SUPPORTS WITH ⅝" DIAMETER ARC SPOT WELDS AT SAME SPACING AS SIDELAP FASTENERS.

3. AS AN ALTERNATIVE TO ARC SPOT WELDS, MECHANICAL FASTENERS MAY BE USED. INSTALL POWDER-ACTUATED FASTENERS OR SCREW FASTENERS IN ACCORDANCE WITH THE MANUFACTURER'S RECOMMENDATIONS. PROVIDE EQUIVALENT LOAD VALUES SHOWING THE MECHANICAL FASTENERS MEET OR EXCEED THE PROVIDED LOAD CRITERIA. FASTENERS MUST BE SDI LISTED FOR DIAPHRAGM DESIGN AND WIND UPLIFT, AND FM LISTED FOR FIRE RESISTANCE AND WIND UPLIFT. FASTENERS MUST BE RECOGNIZED BY ICC-ES FOR DIAPHRAGM SHEAR STRENGTH IN ACCORDANCE WITH THE LATEST VERSION OF ICC-ES AC43.

4. SPAN DECK PERPENDICULAR TO SUPPORTS, CONTINUOUS OVER A MINIMUM OF THREE SPANS. PROVIDE FULL SHEETS ON EDGES OF DIAPHRAGMS.

5. WELDING MUST BE IN ACCORDANCE WITH AWS D1.3, "STRUCTURAL WELDING CODE – SHEET STEEL". FIELD WELDS MUST BE WIRE BRUSHED AND PAINTED WITH RICH ZINC PAINT.

6. PROVIDE SUPPORTS ON ALL SIDES OF DECK OPENINGS MEASURING GREATER THAN 12" ON ANY SIDE OF OPENING. SPAN SUPPORTS BETWEEN ADJACENT BEAMS OR JOISTS ON TWO SIDES. UNLESS OTHERWISE NOTED USE L4X4X1/4. COORDINATE OPENING SIZES, LOCATIONS, AND DETAILS WITH ARCHITECTURAL, MECHANICAL, PLUMBING, AND ELECTRICAL DRAWINGS.

7. DO NOT HANG OR SUPPORT ANY PERMANENT LOADS FROM METAL ROOF DECK.

8. DURING STEEL DECK ERECTION DISTRIBUTE CONSTRUCTION LOADS TO PREVENT DAMAGE TO DECK. CONCENTRATED CONSTRUCTION LOADS OF 150 POUNDS OR LESS DISTRIBUTED OVER A 1'-0" WIDE SECTION OF DECK MUST NOT REQUIRE ANY FURTHER DISTRIBUTION. USE WORKING PLATFORMS FOR CONCENTRATED LOADS OF OVER 150 POUNDS, SUCH THAT THE RESULTING UNIFORM CONSTRUCTION LOAD ON THE DECK DOES NOT EXDEED 50 PSF.

STRUCTURAL DELEGATED DESIGNS AND DEFERRED SUBMITTALS NOTES:

1. STRUCTURAL DELEGATED DESIGNS AND SUBSEQUENT DEFERRED SUBMITTALS ARE FOR ELEMENTS, PARTS, OR PORTIONS OF THE OVERALL STRUCTURAL SYSTEM THAT ARE INDICATED OR REFERRED TO ON THESE DRAWINGS AND THAT ARE CRITICAL TO THE PERFORMANCE OF THE OVERALL STRUCTURAL SYSTEMS. DESIGN CRITERIA HAS BEEN PROVIDED FOR THESES ITEMS IN THE STRUCTURAL NOTES, PLANS, AND DETAILS.

2. STRUCTURAL DEFERRED SUBMITTALS ARE COMPLETE PACKAGES MUST BE SUBMITTED FOR REVIEW THAT INCLUDE DRAWINGS AND CALCULATIONS WITH SIGNED SEALS FOR ALL DELEGATED DESIGN ITEMS AND THEIR CONNECTIONS. DEFERRED SUBMITTALS SHALL BEAR THE STAMP AND SIGNATURE OF THE DESIGN PROFESSIONAL RESPONSIBLE FOR THEIR DESIGN.

3. THE STRUCTURAL ENGINEER OF RECORD WILL REVIEW STRUCTURAL DEFERRED SUBMITTALS TO VERIFY DESIGN CRITERIA IS COMPLIANT WITH THE APPROVED CONSTRUCTIONS DOCUMENTS.

4. DESIGN RESPONSIBILITY FOR THE FOLLOWING ENGINEERED SYSTEMS AND COMPONENT PARTS IS DELEGATED TO A QUALIFIED DELEGATED PROFESSIONAL ENGINEER REGISTERED IN THE STATE OF NORTH CAROLINA SELECTED BY THE CONTRACTOR. STRUCTURAL DELEGATED DESIGN ITEMS REQUIRING DEFERRED SUBMITTALS INCLUDE, BUT ARE NOT LIMITED TO:

4.1. STRUCTURAL STEEL CONNECTIONS EXCEPT FOR PRIMARY LATERAL FORCE RESISTING SYSTEM CONNECTIONS, COLUMN BASE PLATE CONNECTIONS AND CONNECTIONS WHERE SPECIFIC WELD SIZES AND LENGTHS, BOLT SIZES AND QUANTITY, PLATE SIZES AND OTHER CONNECTION COMPONENTS ARE NOTED. WHERE SECTIONS AND DETAILS DO NOT SHOW SPECIFIC CONNECTION COMPONENT INFORMATION, CONNECTIONS SHOWN ARE SCHEMATIC REPRESENTATIONS AND REQUIRE DESIGN BY THE CONTRACTOR. DESIGN AND DETAIL DELEGATED ENGINEERED SYSTEM CONNECTIONS TO RESIST THE LOADS INDICATED.

4.2. OPEN WEB STEEL JOISTS, BRIDGING, BRACING CONNECTIONS AND RELATED COMPONENTS.

4.3. ALUMINUM CANOPY STRUCTURE.

DESIGN CRITERIA NOTES:

1. LOADS USED IN THE DESIGN OF THIS STRUCTURE ARE AS FOLLOWS:

2. BUILDING RISK CATEGORY: II

3. UNIFORM LIVE LOADS:
   SLAB ON GRADE 150 PSF
   ROOF 20 PSF

4. ROOF SNOW LOADS:
   GROUND SNOW LOAD Pg = 10 PSF
   SNOW EXPOSURE FACTOR Ce = 1.0
   SNOW LOAD IMPORTANCE FACTOR I =1.0
   THERMAL FACTOR Ct=1.0
   MINIMUM UNIFORM ROOF DESIGN SNOW LOAD: Pm = 10 PS

5. WIND LOADS:
   ULTIMATE WIND SPEED = 131 MPH
   NOMINAL WIND SPEED (ASD) = 101.5 MPH
   EXPOSURE CATEGORY (MAIN WINDFORCE-RESISTING SYSTEM): C
   EXPOSURE CATEGORY (COMPONENTS AND CLADDING): C
   INTERNAL PRESSURE COEFFICIENT: +/- 0.18 (ENCLOSED)

6. SEISMIC LOADS:
   RISK CATEGORY II
   IMPORTANCE FACTOR I = 1.0
   Ss = .113g
   S1 = .058g
   SOIL SITE CLASS D
   Sds = 0.12
   Sd1 = 0.093
   SEISMIC DESIGN CATEGORY B
   BASIC SEISMIC STRUCTURAL SYSTEM: ORDINARY MASONRY SHEAR WALLS
   RESPONSE MODIFICATION FACTOR, R=2.0
   SEISMIC RESPONSE COEFFICIENT, Cs = 0.060
   DESIGN BASE SHEAR: 0.060W
   ANALYSIS PROCEDURE USED: EQUIVALENT LATERAL FORCE

NOTE: WIND LOADS CONTROL LATERAL DESIGN.

COMPONENTS AND CLADDING ULTIMATE WIND PRESSURES

AREA (SF)	ROOF ZONES										WALL ZONES			
	1		2		2'		3		3'		4		5	
A<10	+16.3	−43.6	+16.3	−50.4	+16.3	−60.6	+16.3	−67.4	+16.3	−94.6	+36.7	−39.8	+36.7	−49.0
A≥100	+16.0	−43.6	+16.0	−47.0	+16.0	−57.2	+16.0	−47.0	+16.0	−60.6	+31.3	−34.4	+31.3	−38.2

FOR ASD LOADING, MULTIPLY BY 0.60
INTERPOLATE BETWEEN AREAS INDICATED.
END ZONE A = 6.0 FEET.
REFER TO SKETCH BELOW FOR ZONE DEFINITIONS.
FOR OVERHANG PRESSURES MULTIPLY ZONES 1 & 2 BY 1.0 AND ZONE 3 BY 1.15.

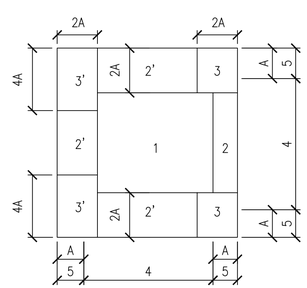

ZONES

ABBREVIATIONS LIST

ARCH.	ARCHITECT
BLDG.	BUILDING
BOTT.	BOTTOM
C.M.U.	CONCRETE MASONRY UNIT
COL.	COLUMN
CONC.	CONCRETE
CONN.	CONNECTION
CONT.	CONTINUOUS
DIAG.	DIAGONAL
DIAM.	DIAMETER
DWGS.	DRAWINGS
E.F.	EACH FACE
ELEV.	ELEVATION
EXP.	EXPANSION
FOUND.	FOUNDATION
F.O.B.	FACE OF BRICK
EXIST.	FOOTING
GALV.	GALVANIZED
HORIZ.	HORIZONTAL
H.S.	HIGH STRENGTH
INSUL.	INSULATION
JT.	JOINT
L.L.V.	LONG LEG VERTICAL
MECH.	MECHANICAL
OPP.	OPPOSITE
PEMB	PRE-ENGINEERED METAL BLDG
P.J.F	PREMOLDED JOINT FILLER
P..I.	POUNDS PER SQUARE INCH
P..F.	POUNDS PER SQUARE FOOT
REF.	REFERENCE
REINF.	REINFORCING
REQ'D.	REQUIRED
SCHED.	SCHEDULE
SECT.	SECTION
SHT.	SHEET
SPECS.	SPECIFICATIONS
STL.	STEEL
T.O.	TOP OF
TYP.	TYPICAL
U..N.	UNLESS OTHERWISE NOTED
VERT.	VERTICAL
W.W.F.	WELDED WIRE FABRIC
W/O	WITH OUT
C.L.	CENTER LINE
PL.	PLATE
O.C.	ON CENTER
ø	DIAMETER
L	ANGLE

CONCRETE REINFORCEMENT LAP SPLICE SCHEDULE

BAR SIZE	LAP LENGTH	
	TOP BARS	BOTTOM BARS
#4	38"	29"
#5	47"	36"
#6	56"	43"
#7	81"	63"
#8	93"	72"
#9	105"	81"

NRW ENGINEERING
Structural Consultants
748 Lord Dunmore Drive, Suite 101
Virginia Beach, VA 23464
Phone 757-474-0912
Fax 757-474-0919
NC license C-1393

MATERIALS KEYING LEGEND

GENERAL NOTES

KEY PLAN

SCO ID #23-27044-01A

NO	REVISION	DATE

SEAL: NORTH CAROLINA PROFESSIONAL ENGINEER SEAL 022630 1-23-2025 KEVIN M. ROOMSBURG

JKF ARCHITECTURE
625 LYNNDALE CT., SUITE F, GREENVILLE, NC 27858 252-355-1068

BEAUFORT COUNTY COMMUNITY COLLEGE
INDUSTRIAL TRAINING CENTER
AURORA, NC

DRAWING TITLE: GENERAL NOTES AND ABBREVIATIONS

SCALE: 1/8" = 1'-0"
DRAWN: JSS
CHECKED: KMR
DATE: 1-6-2025
PROJECT NO.: 2024-10
DRAWING NO: S0.2

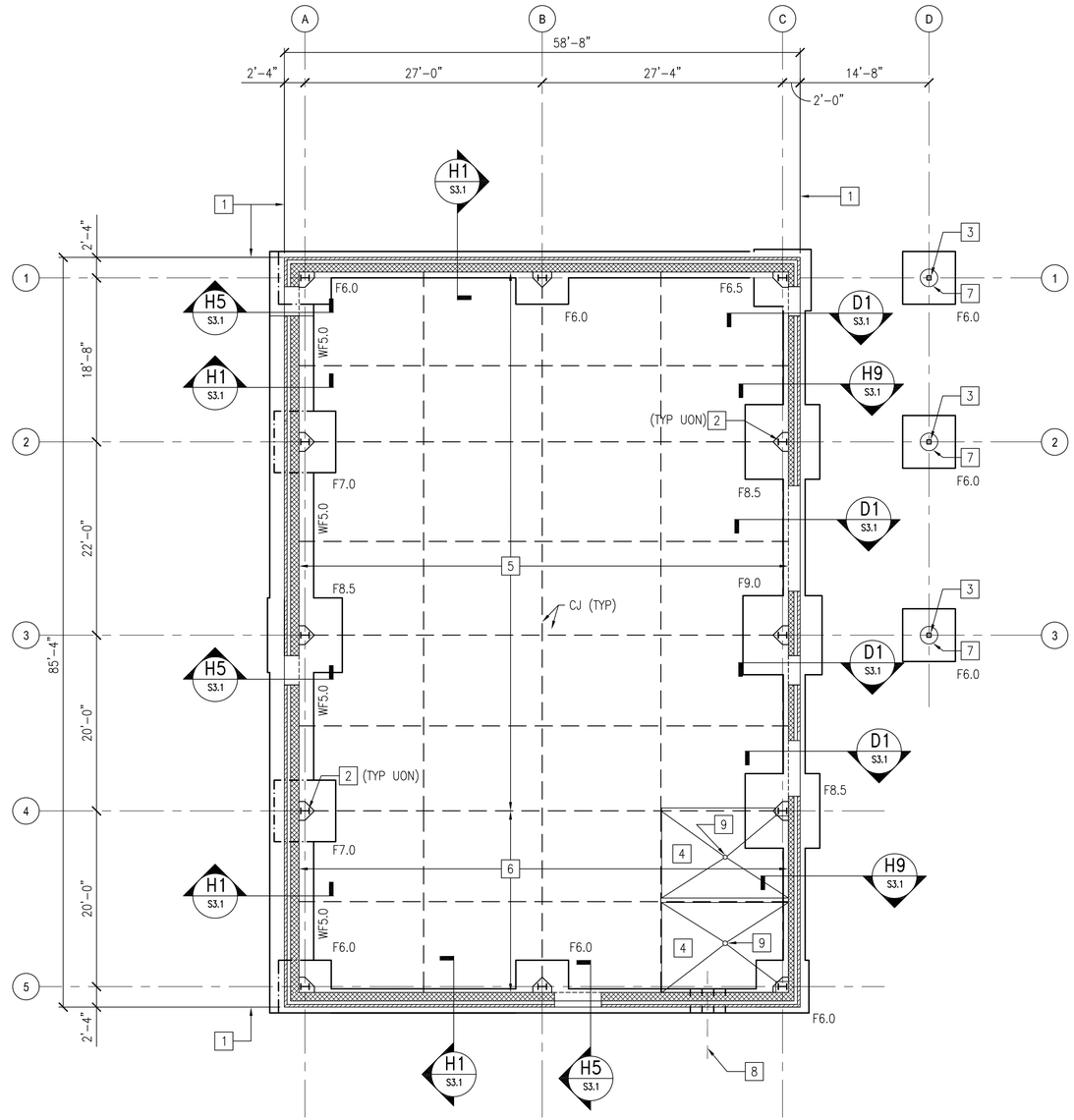

FOUNDATION PLAN

SCALE: 1/8" = 1'-0"

COLUMN FOOTING SCHEDULE

MARK	DIMENSIONS			REINFORCING		NOTES
	W	L	T	TOP BARS	BOTTOM BARS	
F6.0	6'-0"	6'-0"	1'-4"	(7) #5	(7) #5	EACH WAY
F6.5	6'-6"	6'-6"	1'-4"	(8) #5	(8) #5	EACH WAY
F7.0	7'-0"	7'-0"	1'-4"	(8) #5	(8) #5	EACH WAY
F8.5	8'-6"	8'-6"	1'-4"	(10) #5	(10) #5	EACH WAY
F9.0	9'-0"	9'-0"	1'-4"	(11) #5	(11) #5	EACH WAY

WALL FOOTING SCHEDULE

MARK	DIMENSIONS		TOP AND BOTTOM REINFORCING				NOTES
	WIDTH	DEPTH	LONGITUDINAL		TRANSVERSE		
			QUANTITY	SIZE	SIZE	SPACING	
WF3.0	3'-0"	1'-0"	3	#5	5	1'-4"	
WF5.0	5'-0"	1'-0"	5	#5	5	1'-4"	

PLAN NOTES

1. DATUM FOR ALL ELEVATIONS GIVEN ON THIS PLAN IS FINISHED FIRST FLOOR = 0'-0". REFER TO ARCHITECTURAL SITE PLAN FOR ACTUAL ELEVATION.
2. TOP OF CONCRETE SLAB IS AT +0'-0" UNLESS OTHERWISE INDICATED THUS: X'-X" ON PLAN.
3. REFER TO SECTIONS FOR WALL FOOTING SIZES. REFER TO COLUMN FOOTING SCHEDULE FOR FOOTING SIZE AND REINFORCING.
4. UNLESS OTHERWISE NOTED PROVIDE A CONCRETE SLAB ON GRADE ON 15 MIL VAPOR RETARDER OVER 4" NCDOT NO. 57 STONE MATERIAL. REFER TO SLAB KEY NOTES FOR SLAB THICKNESS AND REINFORCING.
5. UNLESS OTHERWISE NOTED THUS (-X'-X") ON PLAN, TOP OF ALL WALL AND COLUMN FOOTINGS SHALL BE AT ELEVATION (-1'-4"), INDICATING DISTANCE BELOW DATUM.
6. WALL FOOTINGS ARE WF3.0 UNLESS OTHERWISE NOTED. FOR COLUMN FOOTING SCHEDULE AND WALL FOOTING SCHEDULE, REFER TO SHEET S1.1. WALL FOOTINGS ARE INDICATED (WFX.X) AND COLUMN FOOTINGS ARE INDICATED (FX.X).
7. STEP FOOTING AS NECESSARY AT PLUMBING AND BELOW GRADE UTILITY LINES. REFER TO TYPICAL STEPPED FOOTING DETAIL ON SHEET S5.1. REFER TO MECHANICAL/PLUMBING DRAWINGS FOR EXACT LOCATIONS.
8. THE SYMBOL CJ INDICATES SLAB CONTROL JOINT, AND MAY BE A CONSTRUCTION JOINT OR SAWED JOINT. REFER TO TYPICAL SLAB CONTROL JOINT DETAILS ON SHEET S5.1.
9. GENERAL NOTES ARE LOCATED ON SHEET S0.1 & S0.2 AND TYPICAL DETAILS ARE LOCATED ON SHEETS S5.1 AND S5.2.

KEY PLAN NOTES

1. EXTERIOR FACE OF BRICK VENEER.
2. W12x40 COLUMN. PROVIDE BASE PLATE TYPE BP1. REFER TO BASE PLATE DETAILS ON SHEET S5.1
3. HSS 6x6x3/16 COLUMN. PROVIDE BASE PLATE TYPE BP2. REFER TO BASE PLATE DETAILS ON SHEET S5.1.
4. 2" RECESSED SLAB. COORDINATE EXACT LOCATION WITH ARCHITECTURAL DRAWINGS.
5. PROVIDE 6" CONCRETE SLAB ON GRADE REINFORCED W/ 6x6-W2.9xW2.9 WELDED WIRE FABRIC LOCATED 1½" FROM TOP OF SLAB.
6. PROVIDE 4" CONCRETE SLAB ON GRADE REINFORCED W/ 6X6-W2.9XW2.9 WELDED WIRE FABRIC LOCATED 1" FROM TOP OF SLAB.
7. CONCRETE COLUMN WRAP, REFER TO DETAIL C6/S3.1
8. FOR PLUMBING LINE REFER TO PLUMBING DRAWINGS. STEP FOOTING BELOW PLUMBING LINE. REFER TO DETAIL ON S5.1.
9. FLOOR DRAIN, REFER TO PLUMBING DRAWINGS.

GRAPHIC SCALES:

1/8" = 1'-0" 0 4' 8' 16'

NRW ENGINEERING
Structural Consultants
748 Lord Dunmore Drive, Suite 101
Virginia Beach, VA 23464
Phone 757-474-0912
Fax 757-474-0919
NC license C-1393

MATERIALS KEYING LEGEND

GENERAL NOTES

KEY PLAN

SCO ID #23-27044-01A

NO	REVISION	DATE

SEAL: NORTH CAROLINA PROFESSIONAL SEAL 022830 1-23-2025 ENGINEER KEVIN M. ROOMSBURG

JKF ARCHITECTURE
625 LYNNDALE CT., SUITE F, GREENVILLE, NC 27858 252-355-1068

BEAUFORT COUNTY COMMUNITY COLLEGE INDUSTRIAL TRAINING CENTER
AURORA, NC

DRAWING TITLE: FOUNDATION PLAN

SCALE	1/8" = 1'-0"
DRAWN	JSS
CHECKED	KMR
DATE	1-6-2025
PROJECT NO.	2024-10
DRAWING NO	S1.1

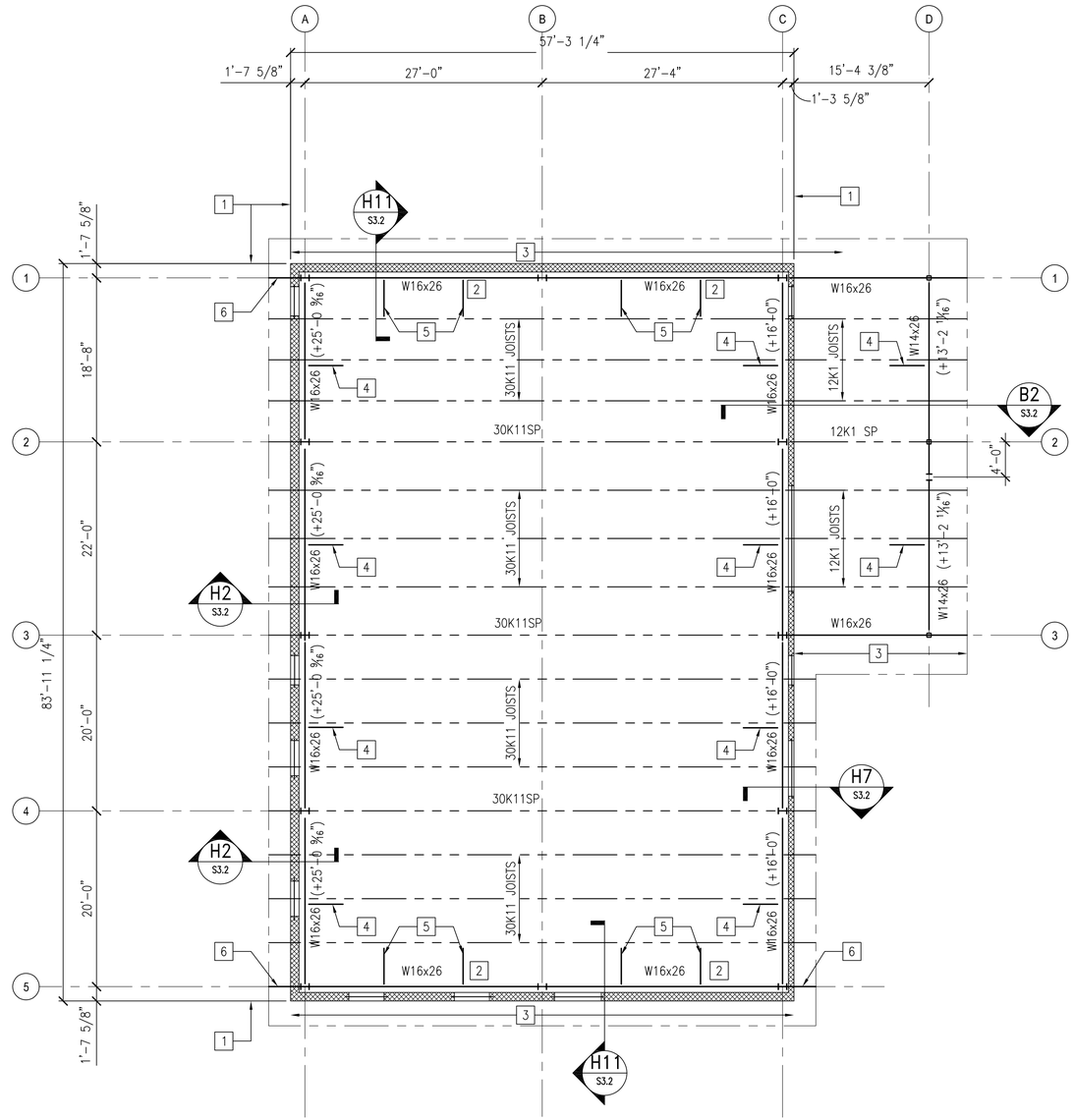

ROOF FRAMING PLAN

SCALE: 1/8" = 1'-0"

TN
PN

PLAN NOTES

1. DATUM FOR ALL ELEVATIONS GIVEN ON THIS PLAN IS FINISHED FIRST FLOOR ELEVATION = 0'-0". REFER TO ARCHITECTURAL SITE PLAN FOR ACTUAL ELEVATION.
2. TOP OF STEEL BEAM ELEVATIONS INDICATED THUS (+_____) ON PLAN.
3. UNLESS OTHERWISE NOTED, THE ROOF CONSTRUCTION IS 1-1/2" DEEP, 20 GA. TYPE 'B' GALVANIZED STEEL ROOF DECK SUPPORTED ON OPEN WEB STEEL JOISTS BEARING ON STEEL BEAMS.
4. GENERAL NOTES ARE LOCATED ON SHEET S0.1 & S0.2 AND TYPICAL DETAILS ARE LOCATED ON SHEETS S5.1 AND S5.2.
5. LINTELS ARE SHOWN THUS ( ) ON PLAN. REFER TO LINTELS DETAILS ON SHEET S5.2.
6. JOIST EXTENDED ENDS MUST BE DESIGNED TO SAFELY SUPPORT A UNIFORM LOAD OF 300 PLF OR 200 LB LOAD LOCATED AT THE END OF JOIST EXTENSION.

KEY PLAN NOTES

1. EXTERIOR FACE OF CMU WALL.
2. SLOPE OF OF BEAM TO MATCH TOP OF ADJACENT JOIST.
3. OUTLOOKERS HSS 3 1/2 X 1 1/2 X 1/4 (LSH) SPACED AT 12" O/C (MAX) WITHIN 12 FEET OF BUILDING CORNERS AND 18" O/C (MAX) AT ALL OTHER LOCATIONS. REFER SECTION H11/S3.2.
4. L2"X2"X3/8" BOTTOM FLANGE BEAM BRACING, REFER TO TYPICAL BOTTOM FLANGE BRACING DETAIL ON S5.2 FOR ADDITIONAL INFORMATION.
5. L2"X2"X3/8" BOTTOM FLANGE BEAM BRACING, REFER TO SECTION H11/S3.2 FOR ADDITIONAL INFORMATION.
6. FOR BEAM EXTENSION REFER TO DETAIL ON SHEET S5.2.

GRAPHIC SCALES:

1/8" = 1'-0" 0 4' 8' 16'

NRW ENGINEERING
Structural Consultants
748 Lord Dunmore Drive, Suite 101
Virginia Beach, VA 23464
Phone 757-474-0612
Fax 757-474-0919
NC license C-1393

MATERIALS KEYING LEGEND

GENERAL NOTES

KEY PLAN

SCO ID #23-27044-01A

NO	REVISION	DATE

SEAL

NORTH CAROLINA PROFESSIONAL ENGINEER SEAL 022630 1-23-2025 KEVIN M. ROOMSBURG

JKF ARCHITECTURE
625 LYNNDALE CT., SUITE F, GREENVILLE, NC 27858 252-355-1068

BEAUFORT COUNTY COMMUNITY COLLEGE
INDUSTRIAL TRAINING CENTER
AURORA, NC

DRAWING TITLE
ROOF FRAMING PLAN

SCALE 1/8" = 1'-0"	DRAWING NO S1.2
DRAWN JSS	
CHECKED KMR	
DATE 1-6-2025	
PROJECT NO. 2024-10	

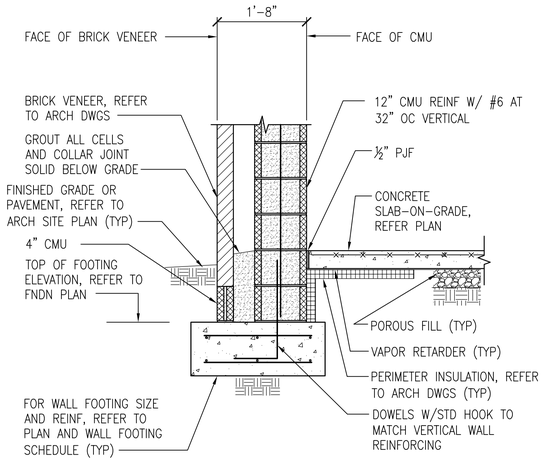

H1 SECTION
SCALE: 3/4" = 1'-0"

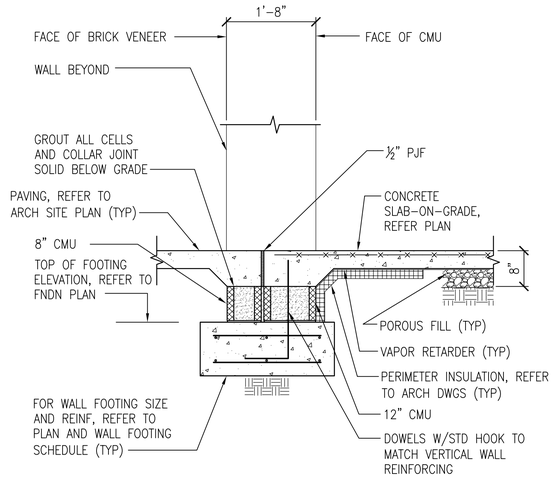

H5 SECTION
SCALE: 3/4" = 1'-0"

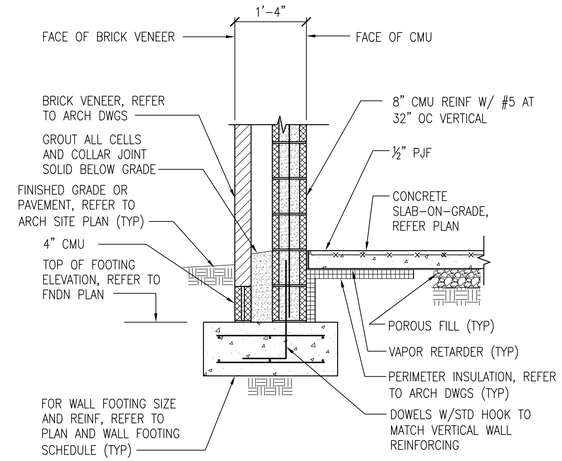

H9 SECTION
SCALE: 3/4" = 1'-0"

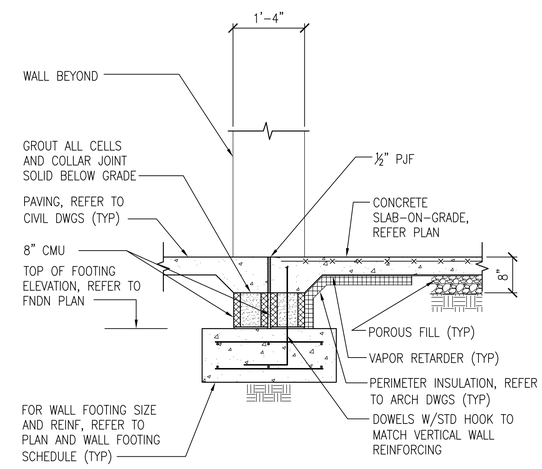

D1 SECTION
SCALE: 3/4" = 1'-0"

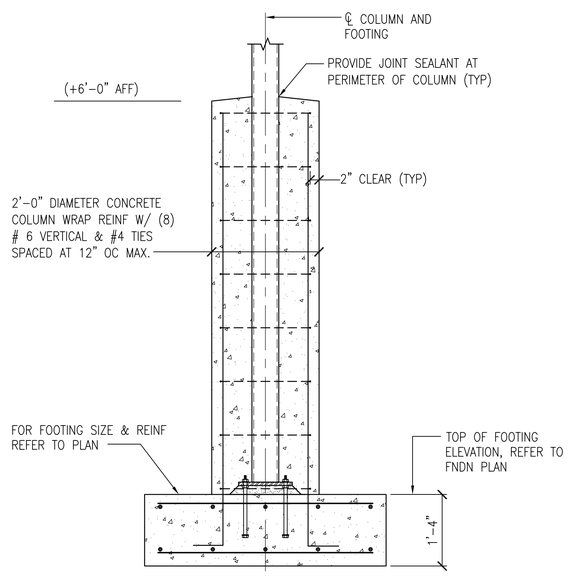

C6 SECTION
SCALE: 3/4" = 1'-0"

GRAPHIC SCALES:

3/4" = 1'-0" 0 1' 2' 3'

NRW ENGINEERING
Structural Consultants
748 Lord Dunmore Drive, Suite 101
Virginia Beach, VA 23464
Phone 757-474-0912
Fax 757-474-0919
NC license C-1393

MATERIALS KEYING LEGEND

GENERAL NOTES

KEY PLAN

SCO ID #23-27044-01A

NO	REVISION	DATE

SEAL
NORTH CAROLINA PROFESSIONAL SEAL 022830 1-23-2025 ENGINEER KEVIN M. ROOMSBURG

JKF ARCHITECTURE
625 LYNNDALE CT., SUITE F, GREENVILLE NC 27858 252-355-1068

BEAUFORT COUNTY COMMUNITY COLLEGE INDUSTRIAL TRAINING CENTER
AURORA, NC

DRAWING TITLE
SECTIONS

SCALE	1/8" = 1'-0"
DRAWN	JSS
CHECKED	KMR
DATE	1-6-2025
PROJECT NO.	2024-10
DRAWING NO	S3.1

NRW ENGINEERING
Structural Consultants
748 Lord Dunmore Drive, Suite 101
Virginia Beach, VA 23464
Phone 757-474-0912
Fax 757-474-0919
NC license C-1393

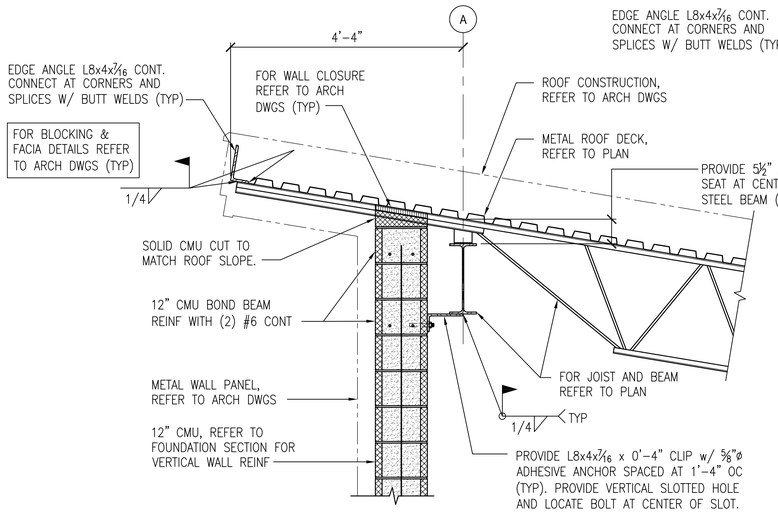

H2 SECTION
SCALE: 3/4" = 1'-0"

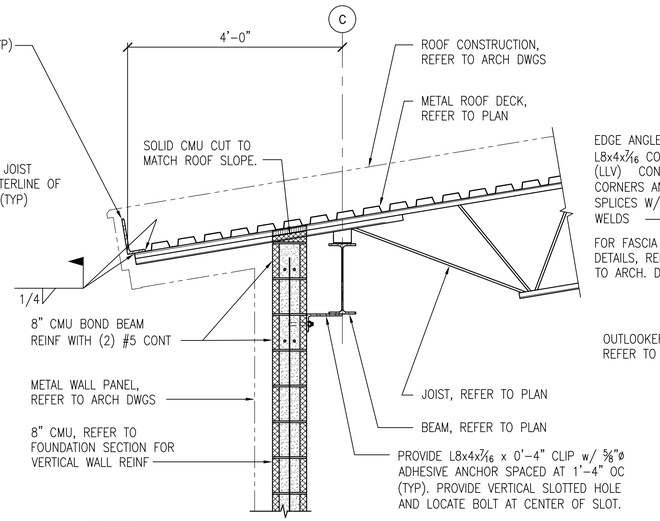

H7 SECTION
SCALE: 3/4" = 1'-0"

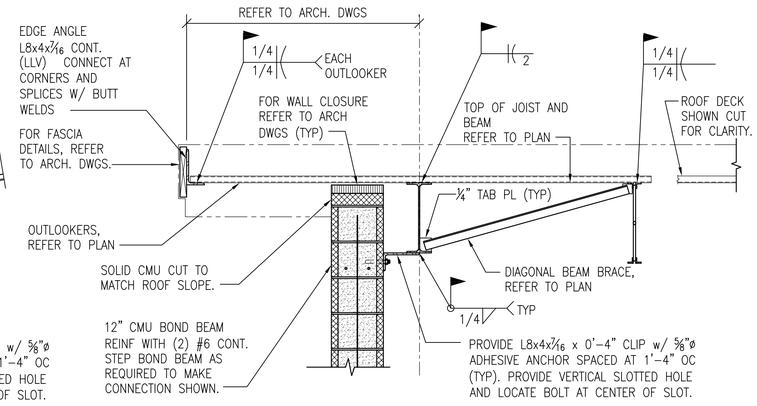

H11 SECTION
SCALE: 3/4" = 1'-0"

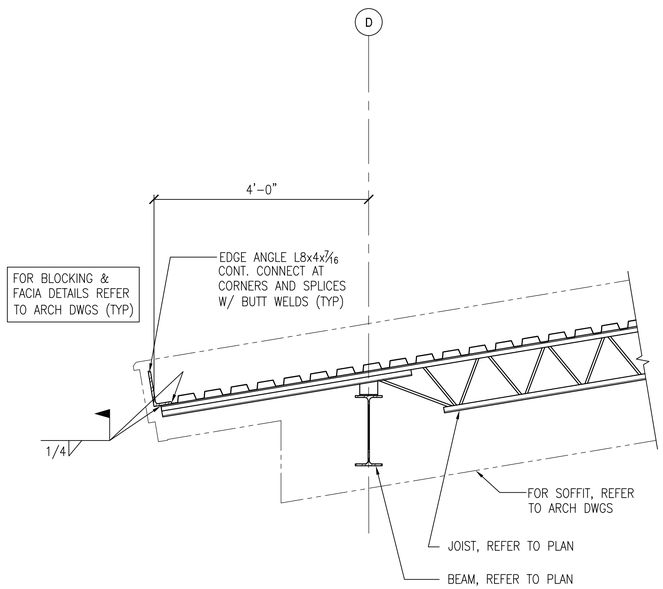

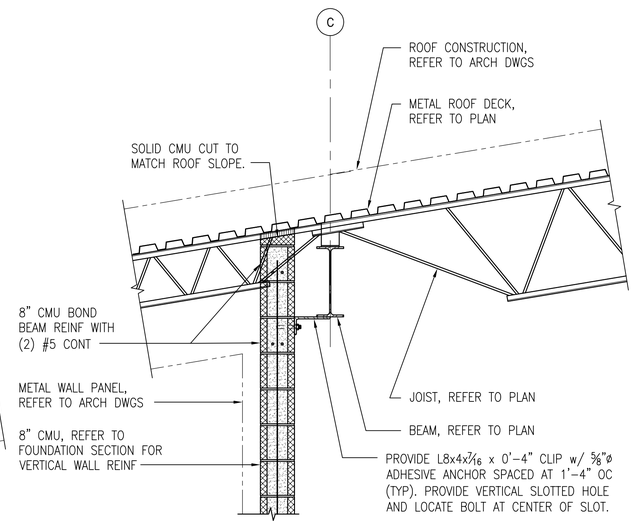

B2 SECTION
SCALE: 3/4" = 1'-0"

GRAPHIC SCALES:
3/4" = 1'-0" 0 1' 2' 3'

MATERIALS KEYING LEGEND

GENERAL NOTES

KEY PLAN

SCO ID #23-27044-01A

NO	REVISION	DATE

SEAL
NORTH CAROLINA PROFESSIONAL ENGINEER SEAL 022630 1-23-2025 KEVIN M. ROOMSBURG

JKF ARCHITECTURE
625 LYNNDALE CT., SUITE F, GREENVILLE, NC 27858 252-355-1068

BEAUFORT COUNTY COMMUNITY COLLEGE INDUSTRIAL TRAINING CENTER
AURORA, NC

DRAWING TITLE
SECTIONS

SCALE	1/8" = 1'-0"
DRAWN	JSS
CHECKED	KMR
DATE	1-6-2025
PROJECT NO.	2024-10
DRAWING NO	S3.2

NRW ENGINEERING
Structural Consultants
748 Lord Dunmore Drive, Suite 101
Virginia Beach, VA 23464
Phone 757-474-0912
Fax 757-474-0919
NC license C-1393

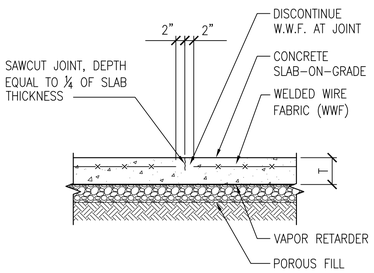

SAWED JOINT

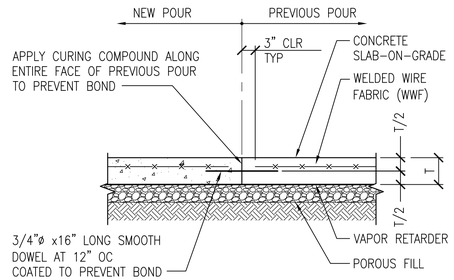

CONSTRUCTION JOINT

TYPICAL SLAB CONTROL JOINT DETAILS

NOT TO SCALE

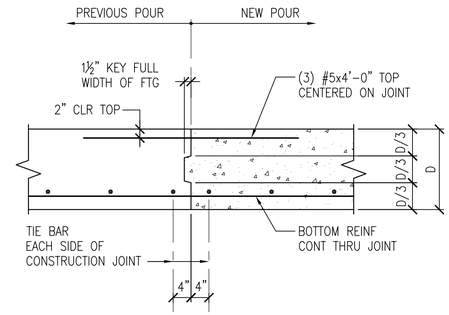

TYPICAL FOOTING CONSTRUCTION JOINT DETAIL

NOT TO SCALE

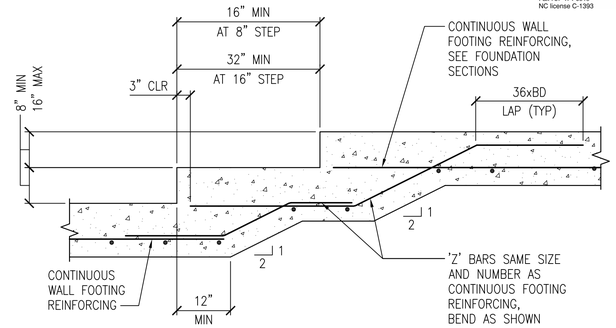

TYPICAL STEPPED FOOTING DETAIL

NOT TO SCALE

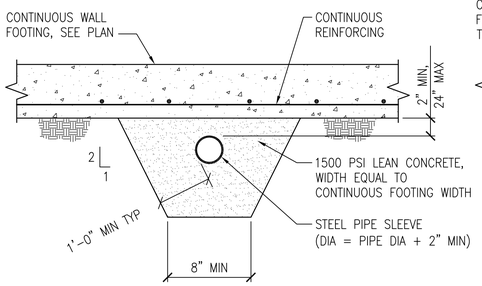

TYPICAL PIPE SLEEVE BENEATH FOOTING DETAIL

NOT TO SCALE

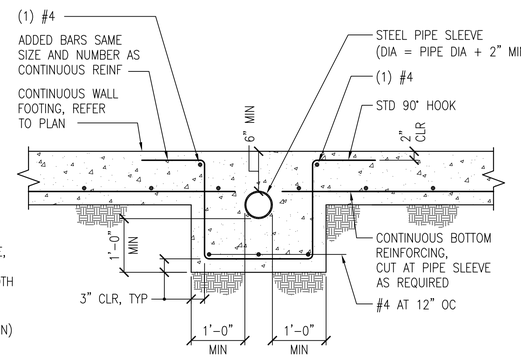

TYPICAL PIPE SLEEVE THROUGH FOOTING DETAIL

NOT TO SCALE

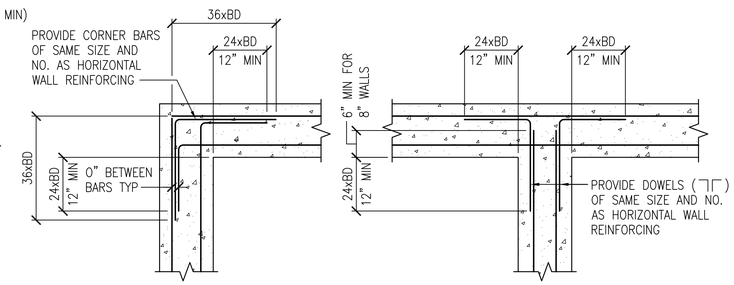

PLAN AT CORNER

PLAN AT INTERSECTION

NOTES: DETAILS ALSO APPLY TO BOND BEAMS IN CMU.

TYPICAL REINFORCEMENT AT CORNERS AND INTERSECTIONS

NOT TO SCALE

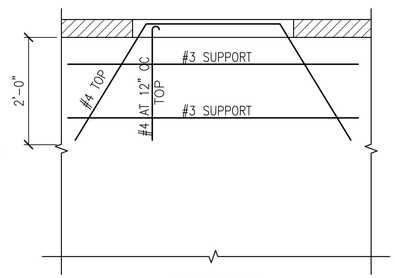

EXTERIOR DOOR

TYPICAL SLAB REINFORCING AT EXTERIOR DOORS

NOT TO SCALE

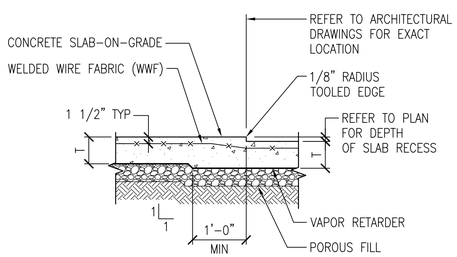

TYPICAL RECESSED SLAB DETAIL

NOT TO SCALE

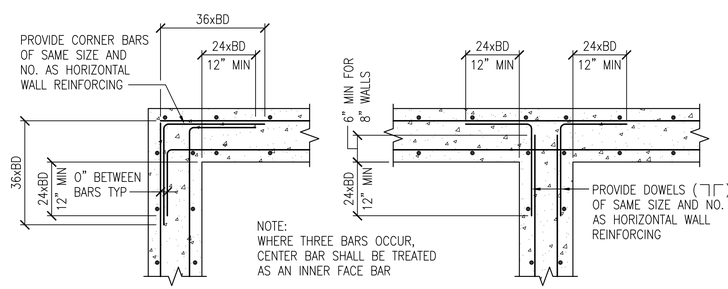

PLAN AT CORNER

PLAN AT INTERSECTION

TYPICAL CONTINUOUS REINFORCING DETAIL

NOT TO SCALE

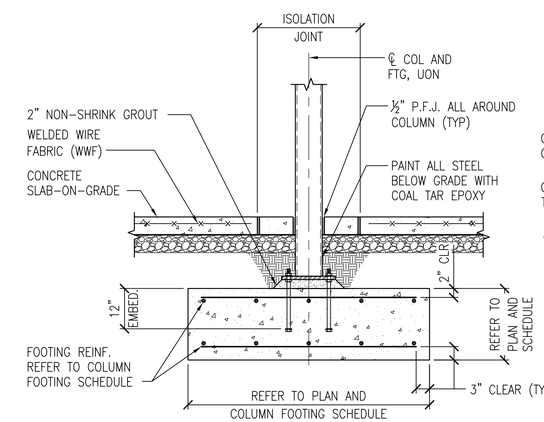

TYPICAL COLUMN AND FOOTING DETAIL

NOT TO SCALE

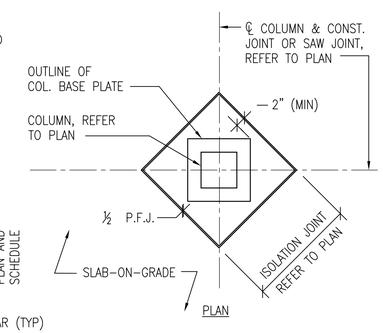

PLAN

TYPICAL COLUMN ISOLATION JOINT DETAIL

NOT TO SCALE

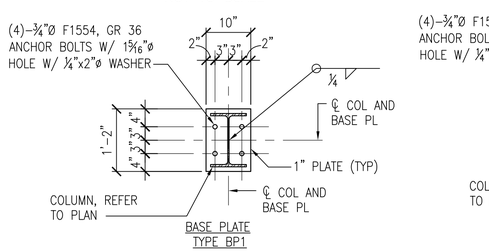

BASE PLATE TYPE BP1

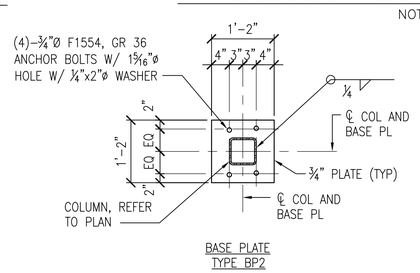

BASE PLATE TYPE BP2

TYPICAL BASE PLATE DETAILS

NOT TO SCALE

MATERIALS KEYING LEGEND

GENERAL NOTES

KEY PLAN

SCO ID #23-27044-01A

NO	REVISION	DATE

SEAL

NORTH CAROLINA PROFESSIONAL SEAL 022630 ENGINEER KEVIN M. ROOMSBURG 1-23-2025

JKF ARCHITECTURE

625 LYNNDALE CT., SUITE F, GREENVILLE, NC 27858 252-355-1068

BEAUFORT COUNTY COMMUNITY COLLEGE INDUSTRIAL TRAINING CENTER
AURORA, NC

DRAWING TITLE
TYPICAL DETAILS

SCALE	1/8" = 1'-0"
DRAWN	JSS
CHECKED	KMR
DATE	1-6-2025
PROJECT NO.	2024-10
DRAWING NO	S5.1

NRW ENGINEERING
Structural Consultants
748 Lord Dunmore Drive, Suite 101
Virginia Beach, VA 23464
Phone 757-474-0912
Fax 757-474-0919
NC license C-1393

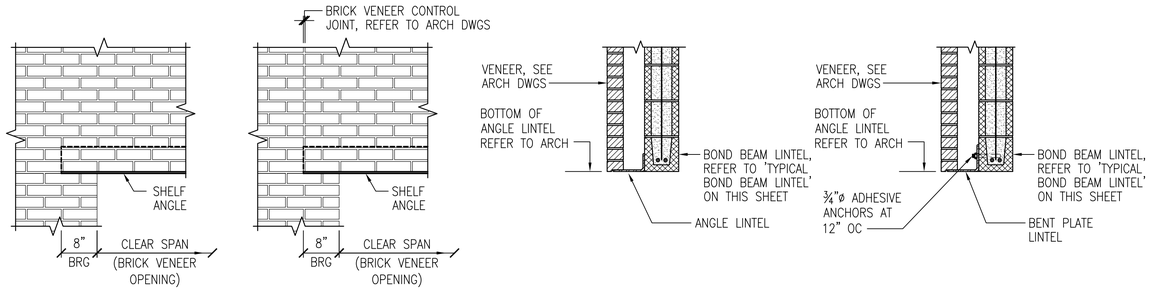

ELEVATION

ELEVATION AT BRICK VENEER CONTROL JOINT

SECTION AT LOOSE ANGLE

SECTION AT ATTACHED ANGLE

TYPICAL MASONRY SHELF ANGLE LINTEL DETAILS

NOT TO SCALE

MASONRY SHELF ANGLE SCHEDULE		
CLEAR SPAN	SHELF ANGLE SIZE	SHELF ANGLE TYPE
0'–0" TO 3'–4"	L7x4x⅜ (LLH)	LOOSE
3'–5" TO 8'–8"	BENT PLATE 7x6x⅜ (LLH)	ATTACHED

NOTES:

1. PROVIDE 8" MINIMUM BEARING AT EACH END OF ANGLE.
2. FOR EXACT SIZE AND LOCATION OF ALL WALL OPENINGS, COORDINATE WITH ARCHITECTURAL, MECHANICAL, PLUMBING AND ELECTRICAL DRAWINGS.
3. GALVANIZED SHELF ANGLES IN EXTERIOR WALLS.

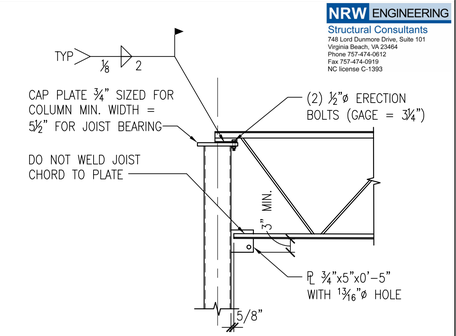

TYPICAL 'SP' JOIST TO COLUMN CONNECTION DETAIL

NOT TO SCALE

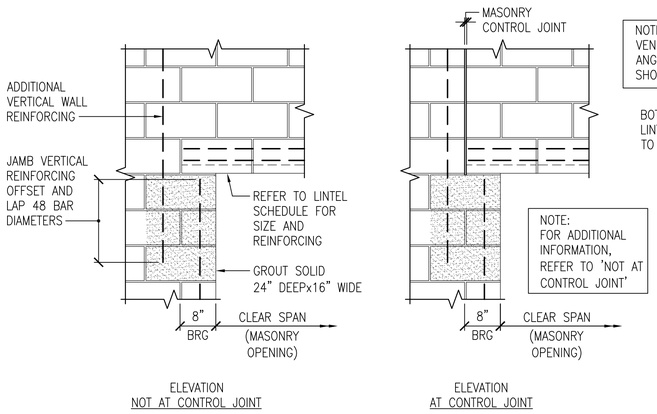

ELEVATION NOT AT CONTROL JOINT

ELEVATION AT CONTROL JOINT

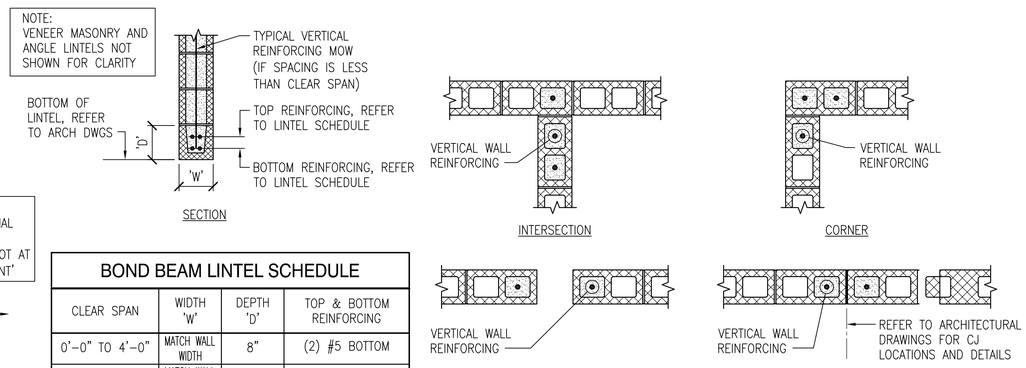

SECTION

INTERSECTION

CORNER

OPENING – WALL TERMINATION

CONTROL JOINT

BOND BEAM LINTEL SCHEDULE			
CLEAR SPAN	WIDTH 'W'	DEPTH 'D'	TOP & BOTTOM REINFORCING
0'–0" TO 4'–0"	MATCH WALL WIDTH	8"	(2) #5 BOTTOM
4'–0" TO 8'–0"	MATCH WALL WIDTH	16"	(2) #5 BOTTOM
8'–0" TO 12'–0"	MATCH WALL WIDTH	24"	(2) #5 BOTTOM

TYPICAL BOND BEAM LINTEL DETAILS

NOT TO SCALE

TYPICAL REINFORCED MASONRY WALL DETAILS

NOT TO SCALE

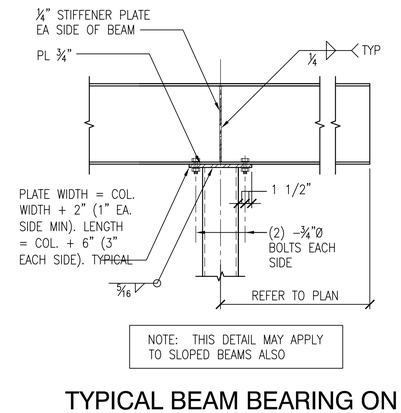

NOTE: THIS DETAIL MAY APPLY TO SLOPED BEAMS ALSO

TYPICAL BEAM BEARING ON COLUMN DETAILS

NOT TO SCALE

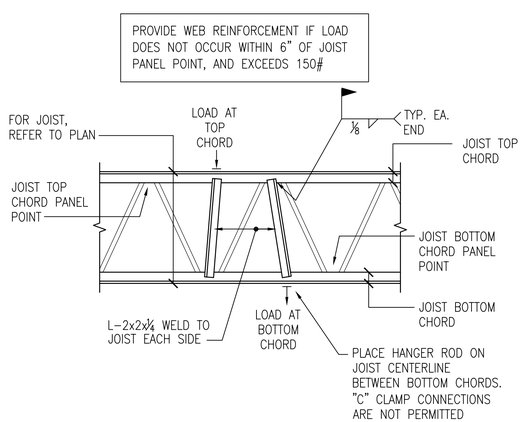

TYPICAL ADDED REINF. AT JOIST SUPPORTING LOADS BETWEEN PANEL POINTS

NOT TO SCALE

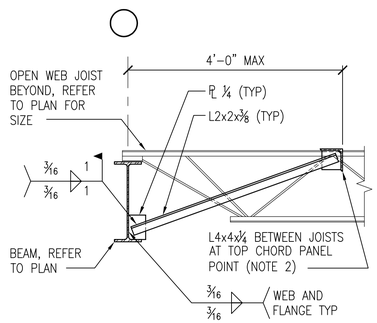

NOTES:

1. STEEL ROOF DECK IS OMITTED FOR CLARITY.
2. HORIZONTAL ANGLE SPANNING BETWEEN JOISTS TO BE LOCATED AT A PANEL POINT. IF THIS CONDITION CAN NOT BE SATISFIED, REFER TO TYPICAL JOIST REINFORCEMENT DETAIL.

TYPICAL BOTTOM FLANGE BRACING

NOT TO SCALE

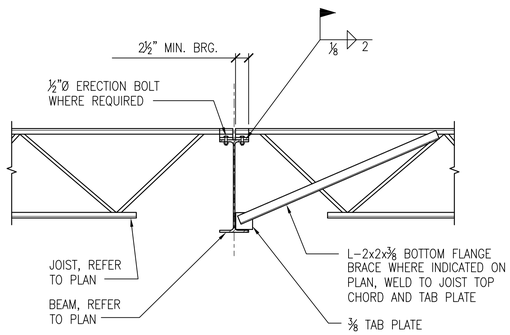

NOTE: OFFSET JOIST TO PROVIDE MINIMUM REQUIRED BEARING WHEREVER POSSIBLE BUTT JOISTS END TO END OVER BEAM CENTERLINE AND PROVIDE SPECIAL JOIST END PER S.J.I. REQUIREMENTS WHERE JOISTS MUST BE ALIGNED.

TYPICAL JOIST TO BEAM CONNECTION DETAIL

NOT TO SCALE

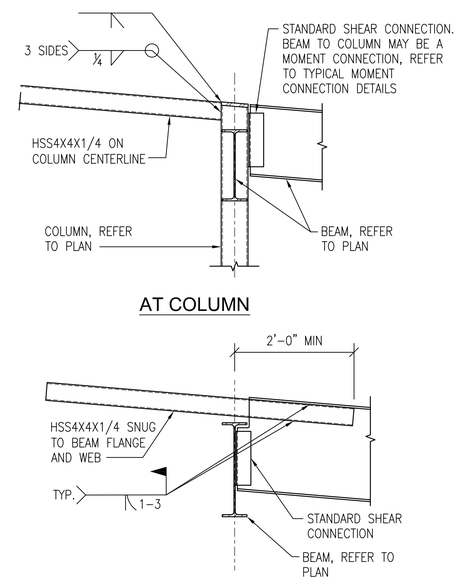

AT COLUMN

AT BEAM

TYPICAL BEAM EXTENSION DETAILS

NOT TO SCALE

MATERIALS KEYING LEGEND

GENERAL NOTES

KEY PLAN

SCO ID #23-27044-01A

NO	REVISION	DATE

SEAL

NORTH CAROLINA PROFESSIONAL ENGINEER SEAL 022830 1-23-2025 KEVIN M. ROOMSBURG

JKF ARCHITECTURE

625 LYNNDALE CT., SUITE F, GREENVILLE NC 27858 252-355-1068

BEAUFORT COUNTY COMMUNITY COLLEGE INDUSTRIAL TRAINING CENTER
AURORA, NC

DRAWING TITLE: TYPICAL DETAILS

SCALE	1/8" = 1'-0"
DRAWN	JSS
CHECKED	KMR
DATE	1-6-2025
PROJECT NO.	2024-10
DRAWING NO	S5.2

PLUMBING FIXTURE SCHEDULE

SYMBOL / IMAGE	DESCRIPTION	3 - EQUALS						PIPING CONNECTIONS		
		MANUFACTURER	MODEL NUMBER	MANUFACTURER	MODEL NUMBER	MANUFACTURER	MODEL NUMBER	COLD WATER	HOT WATER	SANITARY SEWER
CO-1	WALL CLEANOUT	ZURN	CO-2413-PVC	MIFAB		JR SMITH		-	-	SEE PLUMB. DRAWINGS
	ACCESS COVER	ZURN	CO-2530-SS	MIFAB		JR SMITH				
	PVC CLEANOUT BODY AND PLUG TO BE GAS AND WATER TIGHT. PLUG TO HAVE A BRASS THREADED INSERT TO RECEIVE SECURING SCREW FOR STAINLESS STEEL ROUND ACCESS COVER.									
CO-2	FLOOR CLEANOUT	ZURN	CO2449	MIFAB		JR SMITH		-	-	SEE PLUMB. DRAWINGS
	PVC CLEANOUT WITH AND ADJUSTABLE PVC RISER, NICKEL BRONZE FRAME AND COVER, AND AN ABS TAPER THREADED PLUG. CLEANOUT TO BE GAS AND WATERTIGHT.									
CO-3	EXTERIOR CLEANOUT	ZURN	Z-1400-HD	WATTS	CO-200-RX-4-34	JR SMITH	4243	-	-	SEE PLUMB. DRAWINGS
	CLEANOUT HOUSING	ZURN	Z-1474	WATTS	CO-300-MF					
	HEAVY DUTY EXTERIOR CLEANOUT WITH CAST IRON BODY, EXTRA HEAVY DUTY TOP, AND GAS AND WATERTIGHT ABS TAPERED THREAD PLUG.									
EWC-1	WATER COOLER	OASIS	P8SBFSL	ELKAY	LZSTL8WS	HALSEY TAYLOR	HTHP-HACDBLPV-WF	1/2"	-	2"
	PROVIDE WITH FRONT AND SIDE CONTROLS, SHUT-OFF VALVE, CARRIER, AND TRAP. PROVIDE STAINLESS STEEL FINISH. PROVIDE WITH BOTTLE FILLER.									
EWS-1	EMERGENCY EYEWASH SHOWER	BRADLEY	S19-314SB	SPEAKMAN	SE-697	GUARDIAN	G1902	1 1/4"	1 1/4"	-
	MIXING VALVE	BRADLEY	S19-200	SPEAKMAN	SE-356	GUARDIAN	G3800LF			
	COMBINATION SHOWER AND EYEWASH WITH SHOWERHEAD, RECEPTOR, TWIN ANTI-SURGE SOFT-FLO EYEWASH HEADS, PULL ROD ACTIVATED SHOWER, AND PUSH FLAG ACTIVATED EYEWASH. PROVIDE WITH FLOOR DRAIN AND WITH TEPID WATER THROUGH A MIXING VALVE.									
FD-1	FLOOR DRAIN	ZURN	Z-415S	WATTS	FD-100-M	MIFAB	FR1000-1	1/2"	-	3"
	FLOOR DRAIN TO HAVE A 3" WASTE BOTTOM OUTLET, CAST IRON BODY WITH ADJUSTABLE COLLAR, POLISHED 6" x 6" NICKEL BRONZE SQUARE HEELPROOF STRAINER, AND 1/2" TRAP PRIMER CONNECTION.									
I-H	ANTIFREEZE HOSE BIBB	WOODFORD	65	WATTS	HY-420	MIFAB	MI-HY-15	3/4"	-	-
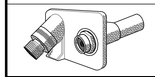	ANTIFREEZE HOSE BIBB SHALL HAVE AUTOMATIC DRAINING WITH ANTI-SIPHON VACUUM BREAKER. 3/4" INLET AND OUTLET. EXTERIOR FINISH TO BE CHROME. PROVIDE WITH LOOSE TEE KEY FOR EACH HOSE BIBB. MOUNT 12" ABOVE FINISHED GRADE.									
I-H	HOSE BIBB	WOODFORD	24	MIFAB	MI-HY-9000-NPB	ZURN	Z55XL	3/4"	-	-
	HOSE BIBB SHALL HAVE AUTOMATIC DRAINING WITH ANTI-SIPHON VACUUM BREAKER. 3/4" INLET AND OUTLET. EXTERIOR FINISH TO BE CHROME. PROVIDE WITH LOOSE TEE KEY FOR EACH HOSE BIBB.									
L-1	LAVATORY	KOHLER	K-2210-0	AMERICAN STANDARD	9482.000	TOTO	LT569			
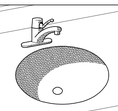	FAUCET	DELTA	523LF-HGMHDF	CHICAGO FAUCETS	2200-4	MOEN	8470			
	TRAP	McGUIRE	8902	DEARBORN BRASS	702-1	KOHLER	K-8999			2"
	SUPPLY	McGUIRE	158LK	BRASS CRAFT	R1912AC	KOHLER	K-7605-P-CP	1/2"	1/2"	
	UNDERMOUNT LAVATORY SHALL BE MADE OF VITREOUS CHINA WITH A WHITE FINISH, HAVE AN OVERFLOW, AND INCLUDE SEALANT. FAUCET SHALL BE CHROME FINISH, SINGLE LEVER, 4" CENTERS, WITH 3/8" COPPER SUPPLY TUBE INLETS, AND PROVIDED WITH AN AERATOR. RIGID SUPPLY KIT SHALL INCLUDE CHROME PLATED BRASS STOPS WITH THREADED CONNECTIONS, FULL TURN BRASS STEM, REDUCER, AND FLANGE. INLET SHALL BE 3/8" IPS, OUTLET SHALL BE 3/8" IPS. P-TRAP SHALL BE CHROME PLATED CAST BRASS BODY WITH CLEANOUT, CAST BRASS ELBOW, CAST BRASS SLIP NUT, AND FLANGE. PROVIDE WITH OFFSET STRAINER, McGUIRE PROWRAP INSULATOR, AND APPROVED WATER-TEMPERATURE LIMITING DEVICE THAT CONFORMS TO ASSE 1070 OR CSA B125.3.									
MR-1	MOP RECEPTOR	STERN WILLIAMS	SB-900	FIAT	TSB100					3"
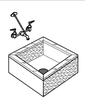	FAUCET	STERN WILLIAMS	T-10-VB	CHICAGO	897RCF	MOEN	8124	1/2"	1/2"	
	HOSE	STERN WILLIAMS	T-35	FIAT	832AA					
	MOP BRACKET	STERN WILLIAMS	T-40	FIAT	889CC					
	MOP RECEPTOR SHALL BE 24" x 24" x 12" DEEP WITH ONE PIECE STAINLESS STEEL CAP, NO FLANGES.									
U-1	URINAL	KOHLER	K-5016-ET	SLOAN	SU7009	AMERICAN STANDARD	6541.132			2"
	VALVE	SLOAN	186	DELANY	F45H	ZURN	Z6003-AV	3/4"	-	
	CARRIER	ZURN	Z-1221	JR SMITH	636	WATTS	CA-311			
	URINAL SHALL BE MADE OF VITREOUS CHINA WITH A WHITE FINISH AND 3/4" TOP SPUD. EXPOSED CHROME PLATED FLUSH VALVE WITH 3/4" CHROME PLATED SPUD COUPLING AND FLANGE. MOUNTING HEIGHT TO BE ADA COMPLIANT.									
S-1	SINK	BRADLEY	MF29491R	WILLOUGHBY	WAW-231IR	ACORN	3644-1-SO			
NO IMAGE	FAUCET	-	-	-	-	-	-			
	TRAP	-	-	-	-	-	-			2"
	SUPPLY	-	-	-	-	-	-	1/2"	1/2"	
	UNIT SHALL BE FLOOR MOUNTED. FAUCET, TRAP, AND SUPPLY PROVIDED WITH LAVATORY. PROVIDE WITH WATER TEMPERATURE LIMITING DEVICE THAT CONFORMS TO ASSE 1070 OR CSA B125.3. PROVIDE WITH INFRARED ACTIVATION WITH PLUG-IN TRANSFORMER.									

PLUMBING GENERAL NOTES

1. ALL WORK SHALL BE DONE IN ACCORDANCE WITH THE LATEST EDITION OF THE STATE CODE, ALL LOCAL AND OTHER APPLICABLE CODES.
2. ANY PERMITS AND INSPECTION FEES SHALL BE SECURED AND PAID FOR BY THE PLUMBING CONTRACTOR.
3. ALL WORK SHALL BE PERFORMED BY EXPERIENCED AND SKILLED CRAFTSMAN. THE PLUMBING CONTRACTOR SHALL COORDINATE ALL OF HIS WORK WITH ALL OTHER CONTRACTORS.
4. THE PLUMBING PLANS AND SPECIFICATIONS SHALL BE THOROUGHLY REVIEWED PRIOR TO PURCHASING MATERIALS AND INSTALLATION. ALL DISCREPANCIES OR INTERFERENCE'S SHALL BE BROUGHT TO THE ENGINEERS ATTENTION.
5. THESE PLANS ARE DIAGRAMMATIC AND MAY NOT SHOW MINOR DETAILS AND LOCATIONS. FOR DIMENSIONS, REFER TO THE ARCHITECTURAL PLANS.
6. THE PLUMBING CONTRACTOR SHALL PROVIDE ALL OPENINGS REQUIRED FOR THE PLUMBING WORK. THE PATCHING SHALL BE BY THE PLUMBING CONTRACTOR AND FINISHING BY GENERAL CONTRACTOR.
7. WATER PIPING BELOW GRADE SHALL BE TYPE "K" COPPER (NO JOINTS BELOW GRADE) AND ABOVE GRADE TYPE "L" COPPER. SUPPORTED AS REQUIRED AND SHALL BE HYDROSTATICALLY TESTED FOR ONE HOUR AT 150 PSI. TEST TO COMPLY WITH ALL EPA STANDARDS. THE ENTIRE WATER DISTRIBUTION SYSTEM SHALL BE DISINFECTED PRIOR TO PLACING IN SERVICE.
8. ALL PIPE, FITTINGS, FIXTURES, AND SOLDER TO BE LEAD FREE.
9. WATER PIPING LOCATED ABOVE CEILINGS AND IN EXTERIOR WALLS SHALL BE ROUTED ON HEATED SIDE OF CEILING INSULATION (UNDERSIDE) AND WALL INSULATION (INSIDE).
10. ALL COLD AND HOT WATER PIPING SHALL BE INSULATED. INSULATE WASTE PIPING AS DESIGNATED ON PLUMBING DRAWINGS. INSULATION SHALL BE 1" FIBERGLASS. EXPOSED PIPING TO BE WRAPPED WITH ALUMINUM JACKET.
11. DO NOT SUPPORT PIPING FROM BAR JOIST BRIDGING AND/OR ROOF DECK.
12. WATER SHUT - OFF VALVES ABOVE FINISHED CEILING ARE TO BE FREE FROM OBSTRUCTIONS SUCH AS DUCTWORK, LIGHTS, WIRING AND OTHER PIPING SO AS TO PROVIDE EASY ACCESS. MOUNT NO MORE THAN 2'-0" ABOVE FINISHED CEILING.
13. IF THE WATER PRESSURE EXCEEDS 80 PSI A PRESSURE REDUCING VALVE SHALL BE INSTALLED WHERE THE WATER ENTERS THE BUILDING.
14. PLUMBING CONTRACTOR SHALL PROVIDE A DIELECTRIC UNION WHEN CONNECTING DISSIMILAR MATERIAL.
15. WATER HEATERS SHALL HAVE AND EFFICIENCY MEETING REQUIREMENTS OF THE NORTH CAROLINA BUILDING CODE.
16. THE PLUMBING CONTRACTOR SHALL BE RESPONSIBLE FOR ALL ELECTRICAL AND CONTROL CONNECTIONS TO THE EQUIPMENT FURNISHED UNDER HIS CONTRACT.
17. SANITARY SEWER AND VENT PIPING SHALL BE SCHEDULE 40 PVC. CELLULAR CORE (FOAM CORE) IS NOT ALLOWED. SANITARY SEWER AND VENT PIPING SHALL BE GAS AND AIR TIGHT.
18. THE PLUMBING CONTRACTOR SHALL COORDINATE ALL WORK WITH OTHER TRADES PRIOR TO INSTALLATION OF ANY WORK.
19. THE PLUMBING CONTRACTOR SHALL REVIEW ALL UTILITY SITE PLANS FOR WORK BY OTHERS. IT SHALL BE THE RESPONSIBILITY OF THE CONTRACTOR TO COORDINATE HIS WORK WITH WORK BY OTHERS AND AVOID ALL CONFLICTS.
20. LOCATIONS OF UTILITIES (WASTE AND WATER PIPING, ETC.) PROVIDED BY OTHERS, THAT ARE TO BE CONNECTED TO ARE ASSUMED. IT SHALL BE THE RESPONSIBILITY OF THE PLUMBING CONTRACTOR TO VERIFY THESE LOCATIONS AND MAKE FINAL CONNECTIONS AS REQUIRED.
21. VERIFY THE LOCATION OF ALL EQUIPMENT SUPPLIED BY OTHERS.
22. PROVIDE VACUUM BREAKERS ON ALL EQUIPMENT DIRECTLY CONNECTED TO THE WATER SYSTEM.
23. ALL VENT PIPING THROUGH THE ROOF SHALL BE A MINIMUM OF 15'-0" FROM ALL MAKE-UP AIR INLETS OR A MINIMUM OF 2'-0" ABOVE THE TOP OF ALL MAKE-UP AIR INLETS. VENTS THROUGH ROOF ARE TO BE ON REAR OF BUILDING.
24. SEE ARCHITECTURAL DRAWINGS FOR PLUMBING MINIMUM FACILITY CALCULATIONS.
25. ALL INDIRECT WASTE IS TO BE PROVIDED WITH AN AIR GAP 2 TIMES THE SIZE OF THE WASTE INLET.
26. THE PLUMBING CONTRACTOR SHALL VERIFY BUILDING FLOOR ELEVATION IS ABOVE MANHOLE RIM ELEVATION OR PROVIDE A BACKWATER VALVE AS REQUIRED.
27. THE PLUMBING CONTRACTOR SHALL BE RESPONSIBLE FOR MINOR DEMOLITION AT NO COST TO THE OWNER.
28. THE PLUMBING CONTRACTOR SHALL PROVIDE THE ENGINEER WITH A SET OF AS-BUILT DRAWINGS UPON COMPLETION OF PROJECT.

PLUMBING SYMBOL LEGEND

SYMBOL	DESCRIPTION
	COLD WATER PIPING
	WATER PIPING DIRECTION OF FLOW
	COLD WATER PIPING BELOW FINISHED FLOOR
	HOT WATER PIPING BELOW FINISHED FLOOR
	120° F HOT WATER PIPING
	BALL VALVE
	WATER PIPING TURNED DOWN
	WATER PIPING TURNED UP
	PIPING SIDE CONNECTION
	SANITARY SEWER / WASTE PIPING
	SANITARY SEWER / WASTE PIPING DIRECTION OF FLOW
	VENT PIPING
	VENT PIPE UP
	PLUMBING FIXTURE PROVIDED AND INSTALLED BY PLUMBING CONTRACTOR
	PLUMBING FIXTURE PROVIDED BY OTHERS AND INSTALLED BY PLUMBING CONTRACTOR

PLUMBING LOAD SUMMARY

WATER DEMAND FU	WATER DEMAND GPM	SANITARY SEWER DEMAND FU
69	58	39

ATLANTEC ENGINEERS, PA
now IMEG
3222 BLUE RIDGE ROAD, SUITE 113
RALEIGH, NC 27612
(919) 571-111
24097

SEAL

NORTH CAROLINA PROFESSIONAL CORPORATION
IMEG CONSULTANTS CORP.
No. F-1507

SEAL

NORTH CAROLINA PROFESSIONAL SEAL 22035 ENGINEER JAMES R. DELPAPA, III

GENERAL NOTES

KEY PLAN

SCO# 23-2704401A

NO	REVISION	DATE

JKF ARCHITECTURE

625 LYNNDALE CT., SUITE F, GREENVILLE, NC 27858 252-355-1068

BEAUFORT COUNTY COMMUNITY COLLEGE INDUSTRIAL TRAINING CENTER

AURORA, NC

DRAWING TITLE

PLUMBING NOTES, LEGEND, LOAD AND FIXTURE SCHEDULE

SCALE: NOT TO SCALE

DRAWN: DRD

CHECKED: JBD

DATE: 01-06-2025

PROJECT NO.: 2024-10

DRAWING NO: P0.1

24097

PLUMBING FIXTURE SCHEDULE

SYMBOL / IMAGE	DESCRIPTION	3 - EQUALS						PIPING CONNECTIONS		
		MANUFACTURER	MODEL NUMBER	MANUFACTURER	MODEL NUMBER	MANUFACTURER	MODEL NUMBER	COLD WATER	HOT WATER	SANITARY SEWER
SA-1	SHOCK ABSORBER	JOSAM	75000	ZURN	Z1700	WADE	4480			
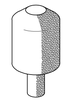	SHOCK ABSORBERS SHALL HAVE A STAINLESS STEEL CASING, FLEXIBLE MECHANICAL BELLOWS, PRESSURIZED INERT GAS CHAMBER AND CERTIFICATION STAMP AS CONFORMING TO STANDARD PDI WH-201 OF THE PLUMBING AND DRAINAGE INSTITUTE.									
TP-1	TRAP PRIMER	MIFAB	MR-500					1/2"	-	-
	PRESSURE DROP ACTIVATED BRASS TRAP SEAL PRIMER, WITH INLET OPENING OF 1/2" MALE N.P.T. AND OUTLET OPENING OF FEMALE 1/2" N.P.T.. SERVES UP TO 6 FLOOR DRAIN TRAPS.									
WC-1	WATER CLOSET	KOHLER	K-96059-0	SLOAN	ST-2009	AMERICAN STANDARD	2234.015			4"
	SEAT	BEMIS	1655SSC	KOHLER	K-4670-C-0	CHURCH	9500C			
	VALVE	SLOAN	III	DELANY	F402-1	ZURN	Z6000-WSI	1"	-	
WC-2	WATER CLOSET	KOHLER	K-96057-0	SLOAN	ST-2029	AMERICAN STANDARD	2305.100			4"
	SEAT	BEMIS	1655SSC	KOHLER	K-4670-C-0	CHURCH	9500C			
	VALVE	SLOAN	III	DELANY	F402-1	ZURN	Z6000-WSI	1"	-	
	TOILET SHALL BE MADE OF VITREOUS CHINA WITH A WHITE FINISH AND A 12" ROUGH-IN AND 1 1/2" TOP SPUD. SEAT SHALL BE EXTRA HEAVY WEIGHT SOLID PLASTIC WITH OPEN FRONT LESS COVER FOR ELONGATED BOWL. EXPOSED CHROME PLATED FLUSH VALVE WITH 1 1/2" CHROME PLATED SPUD COUPLING AND FLANGE. THE FLUSH VALVE MECHANISM SHALL BE PLACED ON THE WIDE SIDE OF THE STALL.									
WH-1	WATER HEATER	STATE INDUSTRIES	PCE 50 20LSA	RHEEM/RUUD	ELD552	LOCHINVAR		3/4"	3/4"	
	ELECTRIC WATER HEATER SHALL HAVE A 50 GALLON STORAGE CAPACITY, AN ELECTRIC INPUT OF 4.5 KW AT 208 VOLT, SINGLE PHASE AND A RECOVERY OF 19 GPH AT A 100°F RISE. PROVIDE WITH THERMOSTATIC MIXING VALVE SET AT 110°F, EXPANSION TANK AND HEAVY DUTY FUSIBLE DISCONNECT. WIRING BY LICENSED ELECTRICAL CONTRACTOR. WATER HEATER TO BE PROVIDED WITH HEAT TRAPS AND MEET THE ENERGY EFFICIENCY REQUIREMENT PER 2018 NORTH CAROLINA STATE BUILDING CODE: ENERGY CONSERVATION CODE.									

PLUMBING SCHEDULE NOTES AND LEGEND:

1. THE PLUMBING CONTRACTOR MAY SUBSTITUTE FIXTURES WITH OWNERS' APPROVAL.
2. SUBMIT CUT SHEETS FOR ALL PROPOSED FIXTURES TO ARCHITECT PRIOR TO BIDDING.
3. PROVIDE VACUUM BREAKER ON ALL EQUIPMENT REQUIRING PLUMBING.
4. REFER TO MANUFACTURERS WEB SITE FOR CUT SHEETS AND DATA ON THE FIXTURES AND APPURTENANCES USED IN THIS SCHEDULE.

ADA COMPLIANT

ELECTRICAL POWER

ATLANTEC ENGINEERS, PA
now IMEG
3223 BLUE RIDGE ROAD, SUITE B3
RALEIGH, NC 27612
(919) 571-111
24097

SEAL

NORTH CAROLINA PROFESSIONAL CORPORATION — IMEG CONSULTANTS CORP. No. F-1507

SEAL

NORTH CAROLINA PROFESSIONAL SEAL 22035 ENGINEER JAMES B. DELPAPA JR.

11/22/24

GENERAL NOTES

KEY PLAN

SCO# 23-2704401A

NO	REVISION	DATE

JKF ARCHITECTURE
625 LYNNDALE CT., SUITE F, GREENVILLE, NC 27858 252-355-1068

BEAUFORT COUNTY COMMUNITY COLLEGE INDUSTRIAL TRAINING CENTER
AURORA, NC

DRAWING TITLE: PLUMBING FIXTURE SCHEDULE

SCALE	NOT TO SCALE
DRAWN	DRD
CHECKED	JBD
DATE	01-06-2025
PROJECT NO.	2024-10
DRAWING NO	P0.2

24097

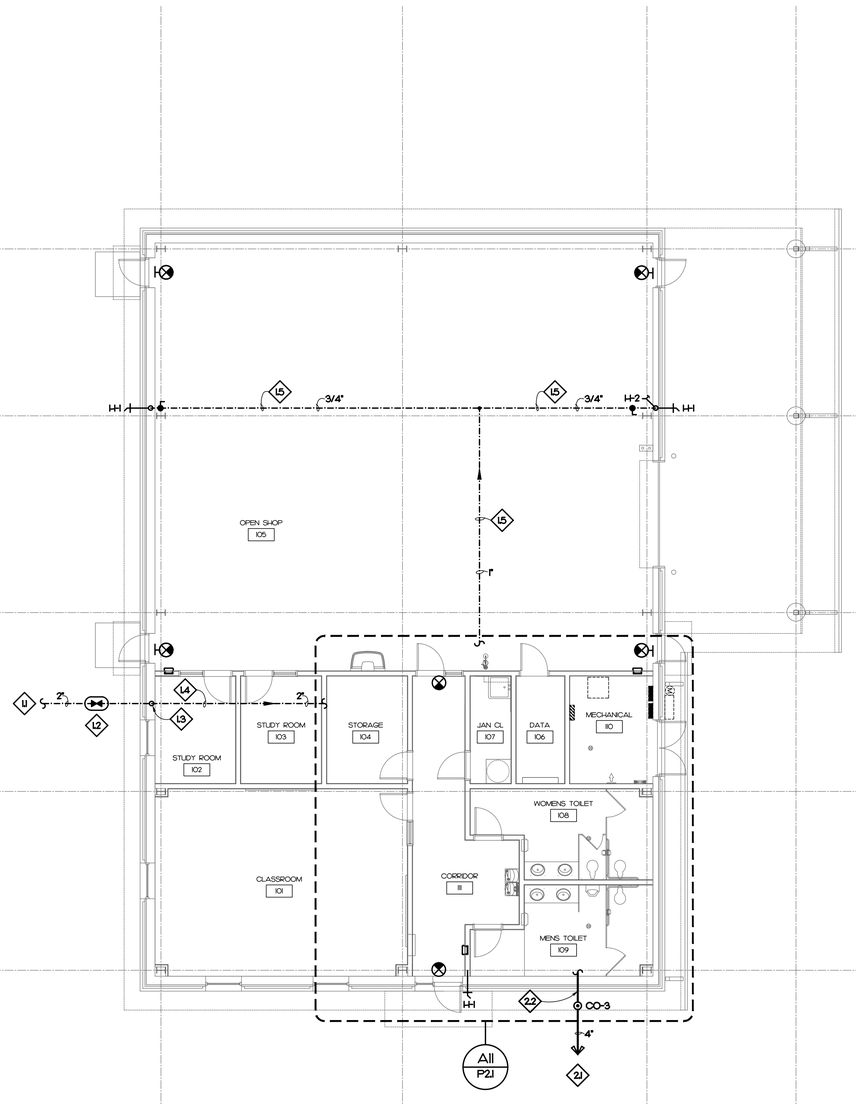

0 4' 8' 16'

SCALE: 1/8" = 1'-0"

PLUMBING PLAN

SCALE: 1/8" = 1'-0"

A11

PLUMBING KEY NOTES

- L1 2" COLD WATER PIPE BELOW FINISHED GRADE. PLUMBING CONTRACTOR'S WORK BEGINS 5'-0" OUTSIDE BUILDING. SEE SITE PLAN FOR CONTINUATION, WATER METER AND BACKFLOW PREVENTER.
- L2 MAIN SHUT OFF VALVE IN VALVE BOX.
- L3 WATER LINE UP IN WALL TO ABOVE FINISHED CEILING.
- L4 WATER PIPING ABOVE FINISHED CEILING. COORDINATE LOCATION WITH MECHANICAL AND ELECTRICAL CONTRACTORS.
- L5 WATER PIPING AT STRUCTURE. COORDINATE LOCATION WITH MECHANICAL AND ELECTRICAL CONTRACTORS. ROUTE WATER PIPING IN SHOP AREA IN A NEAT MANNER. GENERAL CONTRACTOR IS TO PAINT TO MATCH SURROUNDINGS.
- 2.1 4" SANITARY SEWER PIPE BELOW FINISHED GRADE. PLUMBING CONTRACTOR'S WORK EXTENDS 5'-0" OUTSIDE BUILDING. SEE SITE PLAN FOR CONTINUATION.
- 2.2 INVERT ELEVATION IS TO BE 2.05' BELOW FINISHED FLOOR.

ATLANTEC ENGINEERS, PA
now IMEG
3223 BLUE RIDGE ROAD, SUITE 113
RALEIGH, NC 27612
(919) 571-111
24097

SEAL

NORTH CAROLINA PROFESSIONAL CORPORATION
IMEG CONSULTANTS CORP.
No. F-1507

SEAL

NORTH CAROLINA PROFESSIONAL SEAL 22035 ENGINEER
JOHN R. DELPAPA III
1/22/25

GENERAL NOTES

KEY PLAN

SCO# 23-2704401A

NO	REVISION	DATE

JKF ARCHITECTURE
625 LYNNDALE CT., SUITE F, GREENVILLE, NC 27858 252-355-1068

BEAUFORT COUNTY
COMMUNITY COLLEGE
INDUSTRIAL TRAINING CENTER
AURORA, NC

DRAWING TITLE
PLUMBING PLAN

SCALE 1/8" = 1'-0"	DRAWING NO P1.1
DRAWN DRD	
CHECKED JBD	
DATE 01-06-2025	
PROJECT NO. 2024-10	

24097

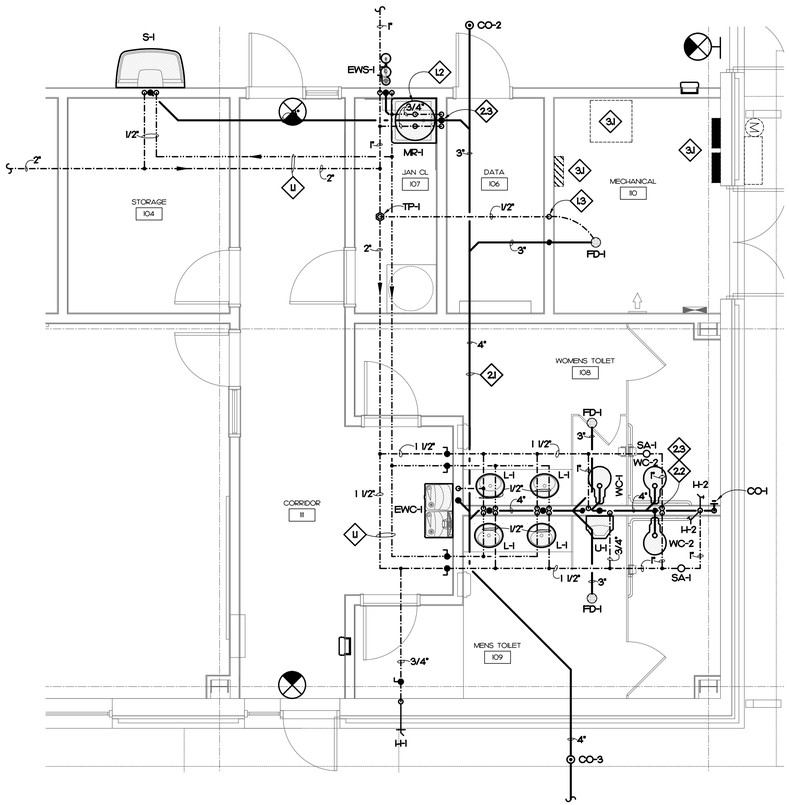

0 2' 4' 8'

SCALE: 1/4" = 1'-0"

ENLARGED PLUMBING PLAN

SCALE: 1/4" = 1'-0"

A11

N

PLUMBING KEY NOTES

- U — WATER PIPING ABOVE FINISHED CEILING. COORDINATE LOCATION WITH MECHANICAL AND ELECTRICAL CONTRACTORS.
- L2 — WATER HEATER (WH-1) LOCATED ON WALL.
- L3 — DROP IN WALL TO BELOW FINISHED FLOOR.
- 2J — SANITARY SEWER PIPE BELOW FINISHED FLOOR.
- 2.2 — SANITARY TEE.
- 2.3 — 3" VENT THROUGH ROOF.
- 3J — ELECTRICAL EQUIPMENT BY ELECTRICAL CONTRACTOR.

ATLANTEC ENGINEERS, PA
now IMEG
3223 BLUE RIDGE ROAD, SUITE B3
RALEIGH, NC 27612
(919) 571-111
24097

SEAL

NORTH CAROLINA PROFESSIONAL CORPORATION
IMEG CONSULTANTS CORP.
No. F-1507

SEAL

NORTH CAROLINA PROFESSIONAL SEAL 22035 ENGINEER JAMES B. DELPAPA, JR.

1/2/25

GENERAL NOTES

KEY PLAN

SCO# 23-2704401A

NO	REVISION	DATE

JKF ARCHITECTURE

625 LYNNDALE CT., SUITE F, GREENVILLE, NC 27858 252-355-1068

BEAUFORT COUNTY
COMMUNITY COLLEGE
INDUSTRIAL TRAINING CENTER
AURORA, NC

DRAWING TITLE
ENLARGED PLUMBING PLAN

SCALE	1/4" = 1'-0"
DRAWN	DRD
CHECKED	JBD
DATE	01-06-2025
PROJECT NO.	2024-10
DRAWING NO	P2.1

24097

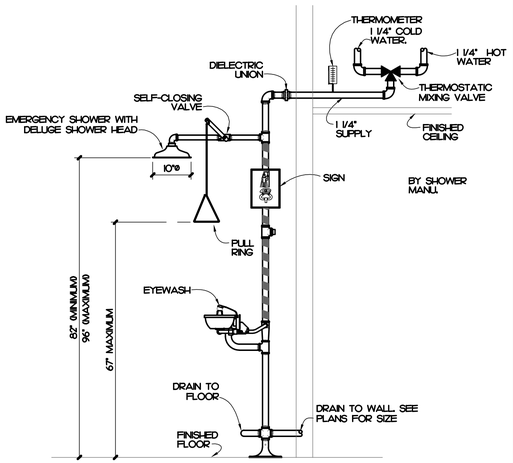

EMERGENCY SHOWER/EYEWASH (7)

NOT TO SCALE

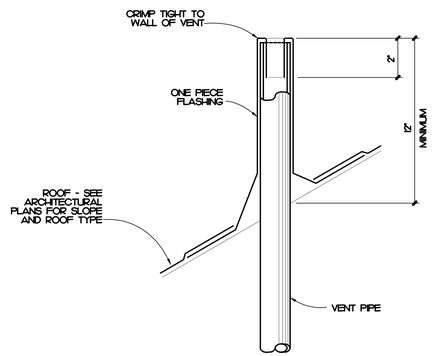

VENT THROUGH ROOF DETAIL (4)

NOT TO SCALE

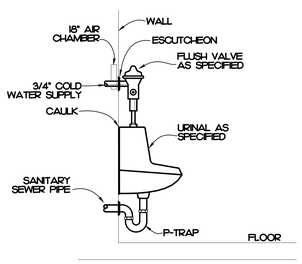

URINAL DETAIL (8)

NOT TO SCALE

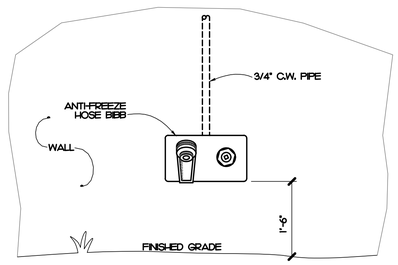

ANTI FREEZE HOSE BIBB DETAIL (5)

NOT TO SCALE

ALL VENT PIPING IS TO BE 2" UNLESS NOTED OTHERWISE.

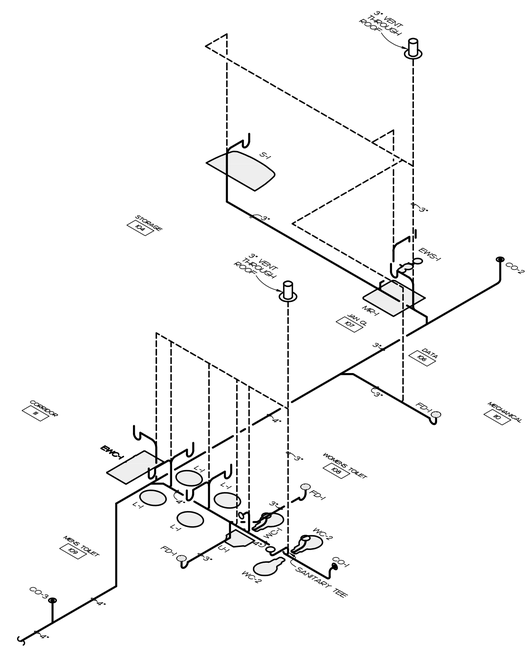

WASTE PIPING RISER (1)

NOT TO SCALE

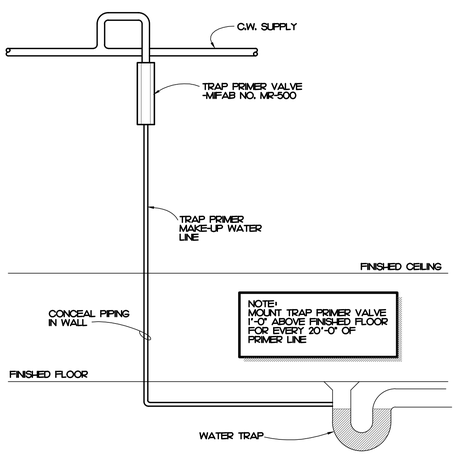

TRAP PRIMER DETAIL (9)

NOT TO SCALE

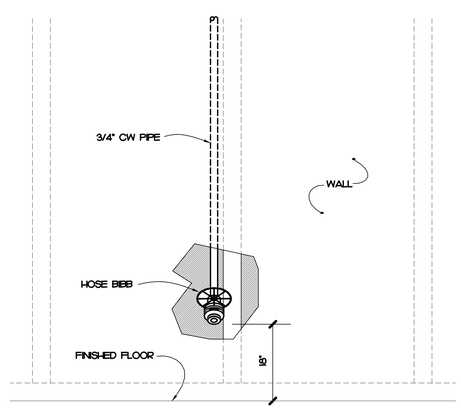

HOSE BIBB DETAIL (6)

NOT TO SCALE

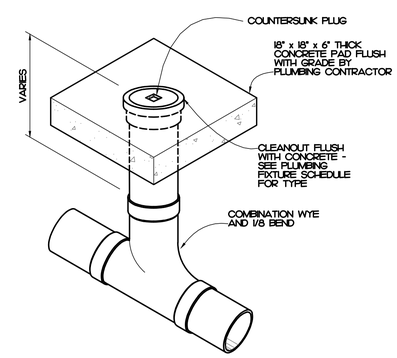

NOTE: SEE SITE AND/OR UTILITY PLAN FOR LOCATION AND FINISH GRADE ELEVATION

EXTERIOR CLEANOUT DETAIL (3)

NOT TO SCALE

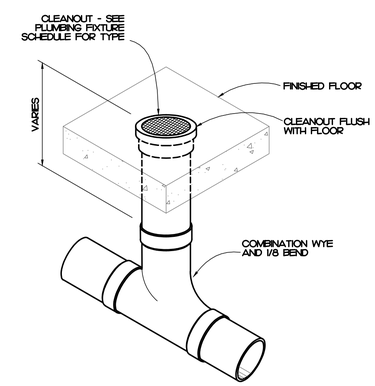

FLOOR CLEANOUT DETAIL (2)

NOT TO SCALE

ATLANTEC ENGINEERS, PA
now IMEG
3223 BLUE RIDGE ROAD, SUITE 13
RALEIGH, NC 27612
(919) 571-11

24097

SEAL: IMEG CONSULTANTS CORP. No. F-1507 — NORTH CAROLINA PROFESSIONAL CORPORATION

SEAL: NORTH CAROLINA PROFESSIONAL SEAL 22035 ENGINEER JAMES B. DELPAPA JR. — 1/22/25

GENERAL NOTES

KEY PLAN

SCO# 23-2704401A

NO	REVISION	DATE

JKF ARCHITECTURE

625 LYNNDALE CT., SUITE F, GREENVILLE, NC 27858 252-355-1068

BEAUFORT COUNTY COMMUNITY COLLEGE INDUSTRIAL TRAINING CENTER

AURORA, NC

DRAWING TITLE: PLUMBING DETAILS AND WASTE RISER

SCALE	NOT TO SCALE
DRAWN	DRD
CHECKED	JBD
DATE	01-06-2025
PROJECT NO.	2024-10
DRAWING NO	P3.1

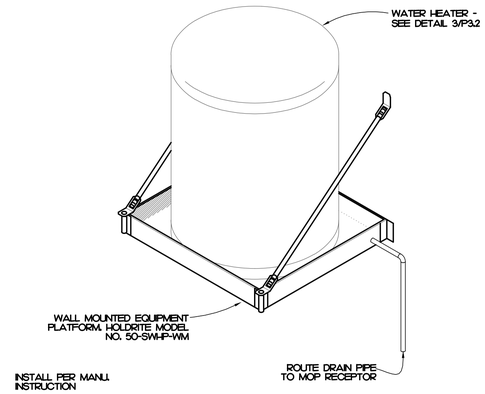

WATER HEATER MOUNTING DETAIL (4)

NOT TO SCALE

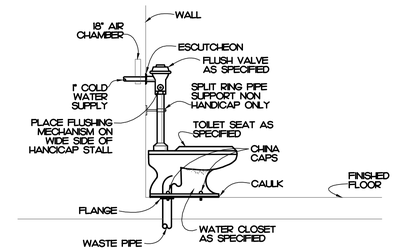

WATER CLOSET DETAIL (1)

NOT TO SCALE

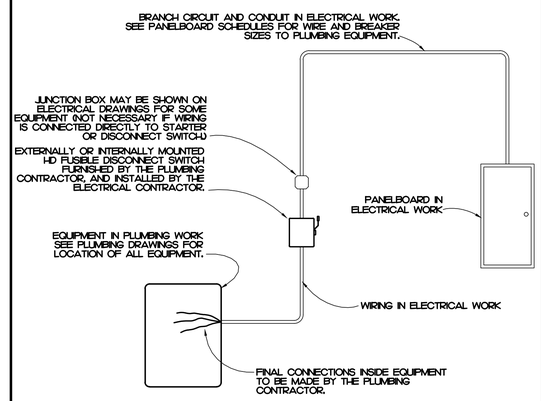

ELECTRICAL WIRING DETAIL (5)

NOT TO SCALE

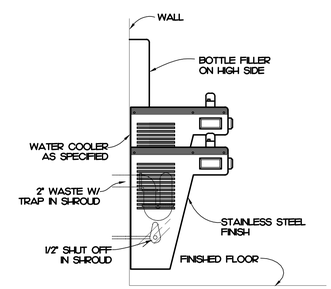

ELECTRIC WATER COOLER DETAIL (2)

NOT TO SCALE

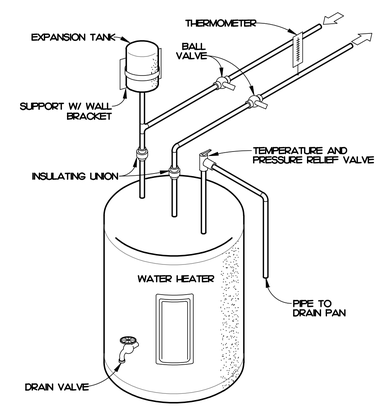

ELECTRIC WATER HEATER DETAIL (3)

NOT TO SCALE

24097

ATLANTEC ENGINEERS, PA
now IMEG
3223 BLUE RIDGE ROAD, SUITE B3
RALEIGH, NC 27612
(919) 571-1111
24097

SEAL: NORTH CAROLINA PROFESSIONAL CORPORATION — IMEG CONSULTANTS CORP. No. F-1507

SEAL: NORTH CAROLINA PROFESSIONAL ENGINEER SEAL 22035 — JESSE B. DELPRATO, JR. — 11/22/25

GENERAL NOTES

KEY PLAN

SCO# 23-2704401A

NO	REVISION	DATE

JKF ARCHITECTURE
625 LYNNDALE CT., SUITE F, GREENVILLE, NC 27858 252-355-1068

BEAUFORT COUNTY COMMUNITY COLLEGE
INDUSTRIAL TRAINING CENTER
AURORA, NC

DRAWING TITLE: PLUMBING DETAILS

SCALE	NOT TO SCALE
DRAWN	DRD
CHECKED	JBD
DATE	01-06-2025
PROJECT NO.	2024-10
DRAWING NO	P3.2

MECHANICAL SYSTEMS, SERVICE SYSTEMS AND EQUIPMENT METHOD OF COMPLIANCE

PRESCRIPTIVE ☒ ENERGY COST BUDGET ☐

THERMAL ZONE 3A

EXTERIOR DESIGN CONDITIONS
- winter dry bulb: 22°F
- summer dry bulb: 96°F
- relative humidity: 46%

INTERIOR DESIGN CONDITIONS
- winter dry bulb: 70°F
- summer dry bulb: 74°F
- relative humidity: 50%

	CLASSROOMS	SHOP
BUILDING HEATING LOAD:	BLOCK LOAD = 27.4 MBH	54.0 MBH
BUILDING COOLING LOAD:	BLOCK LOAD = 50.8 MBH (4.2 TONS)	80.6 MBH (6.7 TONS)

MECHANICAL SPACING CONDITIONING SYSTEM

Unitary:
- description of unit:
- heating efficiency:
- cooling efficiency:
- heat output of unit:
- cooling output of unit:

} SEE SCHEDULES ON SHEET(S) THIS SHEET

Boiler: NA
- total boiler capacity. If oversized state reason.

Chiller: NA
- total chiller capacity. If oversized state reason.

LIST EQUIPMENT EFFICIENCIES: SEE SCHEDULES ON SHEET(S) THIS SHEET

EQUIPMENT SCHEDULES WITH MOTORS (MECHANICAL SYSTEMS)
- motor horsepower:
- number of phases:
- minimum efficiency:
- motor type:
- # of poles:

} SEE SCHEDULES ON SHEET(S) THIS SHEET

DESIGNER STATEMENT

To the best of my knowledge and belief, the design of this building complies with the mechanical systems, service systems and equipment requirements of the North Carolina State Energy Code.

SIGNED: Docusigned by: Harrison Holt

NAME: J. Harrison Holt, PE

TITLE: Professional Engineer

SPLIT-SYSTEM HEAT PUMP SCHEDULE

INSIDE UNIT										OUTSIDE UNIT											
MARK	BASIS OF DESIGN	FAN CFM	FAN EXT. SP.	FAN HP	SUPP. HEAT	ELECTRICAL POWER	ELECTRICAL FLA	ELECTRICAL MOCP	O.A. (CFM)	EDB (°F)	MARK	BASIS OF DESIGN	CAPACITY TOTAL	CAPACITY SENSIBLE	HEATING CAPACITY (@17°F)	ELECTRICAL POWER	ELECTRICAL FLA	ELECTRICAL MOCP	EFFICIENCY COOLING	EFFICIENCY HEATING	NOTES
AH,J-1	TRANE 5TEM4D07AC5I	1600	0.5	3/4	10.8 kW	208/3	36.0	45	300	80	HP-1	TRANE 5TWR4048A1	45.3 MBH	34.9 MBH	28.2 MBH	208/1	20.9	40	14.3 SEER2	7.5 HSPF2	1-11,13,14
AH,J-2	TRANE 5TEM4D05AC4I	1400	0.5	1/2	7.2 kW	208/3	23.9	30	100	80	HP-2	TRANE 5TWR4042A1	38.7 MBH	28.4 MBH	24.6 MBH	208/1	19.7	40	14.3 SEER2	7.5 HSPF2	1-7,9,10,12,14
AH,J-3	TRANE 5TEM4D05AC4I	1400	0.5	1/2	7.2 kW	208/3	23.9	30	100	80	HP-3	TRANE 5TWR4042A1	38.7 MBH	28.4 MBH	24.6 MBH	208/1	19.7	40	14.3 SEER2	7.5 HSPF2	1-7,9,10,12,14

NOTES:
1. PROVIDE WITH FUSIBLE DISCONNECT ON INDOOR AND OUTDOOR UNITS.
2. PROVIDE WITH SINGLE POINT ELECTRICAL CONNECTION.
3. PROVIDE WITH PROGRAMMABLE THERMOSTAT WITH 10 HR BATTERY BACKUP AND 2 HOUR OVERRIDE.
4. PROVIDE WITH MOTORIZED OUTSIDE AIR DAMPER. SEE OUTSIDE AIR SUMMARY FOR OUTSIDE AIR INTAKE FLOW SETTINGS.
5. ROUTE CONDENSATE TO EXTERIOR SPLASH BLOCK.
6. PROVIDE WITH LOW AMBIENT CONTROLS FOR OPERATION DOWN TO 0 DEGREES FAHRENHEIT.
7. PROVIDE WITH 2" PLEATED FILTER RACK AND MERV 13 FILTER AT UNIT.
8. PROVIDE SIMPLE ENGINEERED SOLUTIONS DEHUMIDIFICATION CONTROL MODULE WITH WALL MOUNTED HUMIDISTAT.
9. REFRIGERANT TYPE TO BASED ON R454B REFRIGERANT. PROVIDE ALL ACCESSORIES FOR MONITORING AND PIPE LABELING PER ASHRAE 15 FOR A2L REFRIGERANTS.
10. AIR HANDLER OPERATING WEIGHT IS 200 LBS.
11. AIR HANDLER TO BE INSTALLED IN A VERTICAL POSITION.
12. AIR HANDLER TO BE INSTALLED IN A HORIZONTAL POSITION.
13. PROVIDE WITH DUCT MOUNTED CO2 SENSOR AND ALL ACCESSORIES NEEDED FOR DEMAND CONTROL VENTILATION.
14. UNIT SHALL BE LISTED PER UL 1995 OR UL/CSA 60335-2-40.

NOTE:
EQUALS BY CARRIER, DAIKIN, LENNOX

MINI SPLIT SYSTEM A/C SCHEDULE

INSIDE UNIT				OUTSIDE UNIT								
MARK	BASIS OF DESIGN	FAN CFM	FAN F.L.A.	MARK	BASIS OF DESIGN	COOLING CAPACITY	ELECTRICAL POWER	ELECTRICAL MCA	ELECTRICAL MOCP	EFFICIENCY COOLING	NOTES
FC-4	MITSUBISHI TPKA0AA012	385	0.2	CU-4	MITSUBISHI TRUTA012	12.0 MBH	208/1	11.0	15	21.3 SEER2	1-6

NOTES:
1. PROVIDE FUSIBLE DISCONNECT ON OUTDOOR UNIT.
2. PROVIDE MOTOR RATED SWITCH FOR INDOOR UNIT.
3. PROVIDE WITH CONDENSATE PUMP AND ROUTE DISCHARGE TO EXTERIOR.
4. PROVIDE WITH HARDWIRED THERMOSTAT.
5. PROVIDE WITH LOW AMBIENT CONTROLS DOWN TO 0°F.
6. UNIT SHALL BE LISTED PER UL 1995 OR UL/CSA 60335-2-40.

NOTE:
EQUALS BY DAIKIN, LG, OR CARRIER

GRILLE & DIFFUSER SCHEDULE

MARK	BASIS OF DESIGN	SERVICE	TYPE	MAX. CFM	FACE SIZE	NECK SIZE	NOTES
SD-6	PRICE SCD 4 CONE	SUPPLY	LOUVERED LAY-IN	100	24X24	6"Ø	1-3
SD-8	PRICE SCD 4 CONE	SUPPLY	LOUVERED LAY-IN	200	24X24	8"Ø	1-3
SD-10	PRICE SCD 4 CONE	SUPPLY	LOUVERED LAY-IN	300	24X24	10"Ø	1-3
WG-6	PRICE 530	SUPPLY	SURFACE MOUNT	100	9X6	7X4	1-4
DG-A	PRICE SDG	SUPPLY	DUCT MOUNTED	300	16X8	14X6	1,2,5
CD-6	PRICE SMD	SUPPLY	SURFACE MOUNT	100	8X8	6"Ø	1-4
RA	PRICE 530	RETURN	LOUVERED LAY-IN	1000	24X24	SEE DWG	1-3
RB	PRICE 530	RETURN	DUCT MOUNTED	670	20X14	18X12	1,2,5

NOTES:
1. COORDINATE FINISH WITH ARCHITECT.
2. GRILLE TO HAVE FULLY LOUVERED FACE.
3. PROVIDE WITH INSULATED SHEET METAL PLENUM.
4. PROVIDE FRAME FOR SURFACE MOUNTING.
5. PROVIDE WITH EXTRACTOR AND FRAME FOR DUCT MOUNTING. PAINT GRILLE TO MATCH DUCTWORK.

NOTE:
EQUALS BY NAILOR, METAL AIRE, TITUS

EXHAUST FAN SCHEDULE

MARK	BASIS OF DESIGN	SERVICE	TYPE	CFM	RPM	HP/AMPS	S.P.	POWER	NOTES
EF-1	GREENHECK SP-A125	JANITOR	CABINET FAN	107	960	12 Watts	0.25"	120/1	1,2,4
EF-2	GREENHECK SP-A150	GANG TOILETS	CABINET FAN	179	1400	48 Watts	0.25"	120/1	1-3
EF-3	GREENHECK SBE-11-20	SHOP	SIDEWALL	2025	898	1/4 H.P.	0.25"	120/1	1,2,5-7

NOTES:
1. PROVIDE WITH DISCONNECT SWITCH.
2. PROVIDE WITH BACKDRAFT DAMPER.
3. CONTROL VIA LIGHT SWITCH BY E.C.
4. CONTROL VIA WALL SWITCH BY E.C.
5. PROVIDE MOTOR-SIDE GUARD AND WEATHER HOOD.
6. FAN CONTROLLED BY TOXIC GAS MONITORING SYSTEM.
7. PROVIDE WITH COMBINATION STARTER AND DISCONNECT.

NOTE:
EQUALS BY COOK, LG, TWIN CITY FANS

Split System Heat Pump Sequence of Operations:

Split System Heat Pump Interface:
The programmable thermostat shall control Heat/Cool modes and temperature setpoints.

Occupied:
During occupied periods, the supply fan shall cycle on/off upon a call for heating or cooling. The DX cooling / heating and electric heat shall operate to maintain the active space temperature setpoint.

Unoccupied:
When the space temperature is below the unoccupied heating setpoint of 60.0 deg. F (adj.), the supply fan shall start and the DX heating shall be enabled. The electric heat shall cycle on and off as necessary to maintain the active heating setpoint. When the space temperature rises above the unoccupied heating setpoint of 60.0 deg. F (adj) plus the unoccupied differential of 4.0 deg. F (adj) the supply fan shall stop. When the space temperature is above the unoccupied cooling setpoint of 85.0 deg. F (adj.) the supply fan shall start and the DX cooling shall be enabled. When the space temperature falls below the unoccupied cooling setpoint of 85.0 deg. F minus the unoccupied differential 4.0 deg. F (adj) the supply fan shall stop and the DX cooling shall be disabled.

Space Temperature Control:
Space temperature will be controlled by programmable thermostat. The space temperature shall be maintained between the occupied cooling setpoint of 74.0 deg. F (adj.) and the occupied heating setpoint of 70.0 deg. F (adj.). The unit shall transition to the cooling mode when the space temperature rises one degree above the occupied cooling setpoint of 74.0 deg. F (adj.). The unit shall transition to the heating mode when the space temperature drops one degree below the occupied heating setpoint of 70.0 deg. F (adj.).

Supply Fan Operation:
The supply fan shall cycle on demand during the unoccupied/occupied mode.

Condensate Overflow Monitoring:
To prevent the condensate drain pan from overflowing and causing water damage to the building the fan shall be disabled and the DX cooling shall be disabled.

Occupied Humidity Control:
If the space relative humidity is greater than 50% (adj.), the DX cooling shall control to maintain space relative humidity setpoint of 50% (adj.) and the electric heat shall control to maintain the discharge air temperature setpoint. Mode shall terminate when the space relative humidity falls below the relative humidity setpoint of 50% (adj.) minus 3% (adj.). If the space relative humidity sensor fails the dehumidification sequence shall be terminated and an alarm shall annunciate at the BAS.

Exhaust Fan (EF-3) Sequence of Operations:

CO/NO2 Mitigation exhaust fan shall be controlled automatically through the Toxi Gas Monitoring System.

Operation:
Space exhaust fan shall be controlled through carbon monoxide (CO) and nitrogen dioxide (NO2) sensors in the space. Upon detection of carbon monoxide (CO) of 50 ppm or nitrogen dioxide (NO2) of 3 ppm, the space exhaust fan shall energize until gas levels have decreased below setpoint. Once gas levels have been maintained below setpoint for a duration of 15 minutes*, the space exhaust fan shall de-energize.

Makeup Air Damper:
A damper end switch shall prove the damper's close and open position. Upon fan start, the makeup air damper shall fully open and if damper status does not prove fully open within 60 seconds (adj.), an alarm shall annunciate at the toxic gas monitoring control panel.

GENERAL NOTES

1. ALL WORK SHALL BE DONE IN ACCORDANCE WITH THE 2018 STATE CODE, ALL LOCAL, AND OTHER APPLICABLE CODES
2. ANY PERMITS AND INSPECTION FEES SHALL BE SECURED AND PAID FOR BY THE MECHANICAL CONTRACTOR (M.C).
3. ALL WORK SHALL BE PERFORMED BY EXPERIENCED AND SKILLED CRAFTSMAN. THE M.C. SHALL COORDINATE ALL OF HIS WORK WITH ALL OTHER CONTRACTORS.
4. THE MECHANICAL PLANS AND SPECIFICATIONS SHALL BE THOROUGHLY REVIEWED PRIOR TO PURCHASING MATERIALS AND INSTALLATION. ALL DISCREPANCIES OR INTERFERENCES SHALL BE BROUGHT TO THE ENGINEERS' ATTENTION.
5. THESE PLANS ARE DIAGRAMMATIC AND MAY NOT SHOW MINOR DETAILS AND LOCATIONS. FOR DIMENSIONS, REFER TO THE ARCHITECTURAL PLANS.
6. THE M.C. SHALL BE RESPONSIBLE FOR ALL ELECTRICAL STARTERS, INTERLOCKS, CONTROL WIRING. THE ELECTRICAL CONTRACTOR SHALL PROVIDE POWER WIRING, CONDUIT FROM THE DISCONNECT TO M.C. EQUIPMENT. THE M.C. SHALL BE RESPONSIBLE FOR ALL FINAL CONNECTION TO HIS EQUIPMENT.
7. INSTALL FLEXIBLE CONNECTORS ON SUPPLY AND RETURN DUCTWORK AT ALL AIR HANDLING UNITS.
8. INSTALL TURNING VANES IN SUPPLY DUCTS AT ELBOWS. PROVIDE BALANCING AND SPLITTER DAMPERS WHERE SHOWN AND AS REQUIRED FOR SYSTEM BALANCING.
9. ALL THERMOSTATS, WIRING AND CONDUIT ARE TO BE FURNISHED BY THE M.C. MOUNT THERMOSTATS 4'-0" ABOVE THE FLOOR, UNLESS OTHERWISE NOTED.
10. THE M.C. SHALL INSURE THAT ALL MECHANICAL EQUIPMENT INSTALLED UNDER HIS CONTRACT SHALL OPERATE FREE OF OBJECTIONABLE NOISE AND VIBRATION.
11. THE M.C. SHALL KEEP THE PREMISES CLEAR OF DEBRIS FROM HIS WORK DURING CONSTRUCTION AND LEAVE THE AREA AND BUILDING CLEAN AT THE COMPLETION OF HIS WORK. HE SHALL ALSO LEAVE CLEAN ALL EXPOSED EQUIPMENT IN HIS CONTRACT.
12. FLEXIBLE DUCT RUNOUTS SHALL BE A MAXIMUM OF 10'-0".
13. ALL FLEXIBLE DUCT RUNOUTS SHALL INCLUDE INSULATED DAMPERED BOOTS AT THE POINT OF CONNECTION WITH RECTANGULAR DUCT. PROVIDE ALL FLEXIBLE DUCTWORK WITH FOIL-BACKED, EXTERNALLY WRAPPED INSULATION FOR A MINIMUM OF R-8.
14. ALL DUCTWORK SIZES SHOWN ARE ACTUAL SHEET METAL DIMENSIONS. EXTERNALLY WRAP ALL DUCT WITH 3" FOIL-BACKED INSULATION FOR A MINIMUM OF R-8, UNLESS NOTED OTHERWISE.
15. MECHANICAL CONTRACTOR SHALL WORK WITH TEST AND BALANCE CONTRACTOR TO REMEDY ANY DIFFERENCES TO INCLUDE FAN DRIVE CHANGES, INSTALLATION OF DAMPERS OR OTHER MINOR DUCT MODIFICATIONS TO PROVIDE AIRFLOW TO WITHIN +/- 10% OF THE DESIGN VALUES LISTED ON THESE PLANS.
16. THE AIR HANDLING UNIT SHALL OPERATE PER THE SEQUENCE OF OPERATION.
17. THE MECHANICAL CONTRACTOR SHALL PROVIDE THE ENGINEER WITH A SET OF AS-BUILT DRAWINGS UPON COMPLETION OF JOB.
18. THE MECHANICAL CONTRACTOR SHALL PROVIDE THE ENGINEER WITH A SET OF DUCT SHOP DRAWINGS FOR APPROVAL.
19. THE MECHANICAL CONTRACTOR SHALL PROVIDE THE ENGINEER WITH A BALANCE REPORT BY A CERTIFIED TEST AND BALANCE COMPANY.
20. PROVIDE PERMIT LABEL ENGRAVED PLASTIC LAMINATE MECHANICALLY FASTENED TO OUTDOOR UNITS.
21. LABEL CEILING GRID WHERE EQUIPMENT IS LOCATED ABOVE LAY-IN CEILING. WITH EQUIPMENT IDENTIFIER. ALSO LABEL ALL TEMPERATURE SENSORS AND THERMOSTATS WITH EQUIPMENT IDENTIFIER.

SYMBOL LEGEND

SYMBOL	DESCRIPTION
	SHEET METAL DUCT
	FLEXIBLE DUCT
	SUPPLY DIFFUSER - LETTER & NUMBER INDICATES TYPE & CFM
	RETURN GRILLE - LETTER & NUMBER INDICATES TYPE & CFM
	EXHAUST FAN
T	WALL MOUNTED THERMOSTAT - COORDINATE MOUNTING HEIGHT WITH ARCHITECTURAL DRAWINGS
BD	BALANCING DAMPER
	ELBOW WITH TURNING VANES
CO	CARBON MONOXIDE SENSOR - MOUNTED 60" ABOVE FINISHED FLOOR
N	NO2 SENSOR - MOUNTED 13" ABOVE FINISHED FLOOR
H	WALL MOUNTED HUMIDISTAT - COORDINATE MOUNTING HEIGHT WITH ARCHITECTURAL DRAWINGS
M	MOTOR OPERATED DAMPER
CO	DUCT MOUNTED CARBON DIOXIDE SENSOR
C	CONDENSATE PIPING
R	REFRIGERANT PIPING

OUTSIDE AIR SUMMARY

REQUIRED:

CLASS/STUDY = 802 SQFT * 0.06 CFM/SQFT + 24 PEOPLE * 7.5 CFM/PERSON = 228 CFM
OPEN SHOP = 2663 SQFT * 0.06 CFM/SQFT = 160 CFM
TLT/CORR/STOR = 941 SQFT * 0.06 CFM/SQFT = 56 CFM

TOTAL REQUIRED = 444 CFM

PROVIDED:

AH,J-1 = 300 CFM MAX & 75 CFM MIN
AH,J-2 = 100 CFM
AH,J-3 = 100 CFM

TOTAL PROVIDED = 500 CFM

ATLANTEC ENGINEERS, PA
FOR IMEG
3223 BLUE RIDGE ROAD, SUITE B3
RALEIGH, NC 27612
(919) 571-8
24097

SEAL: IMEG CONSULTANTS CORP. No. F-1507 NORTH CAROLINA PROFESSIONAL CORPORATION

SEAL: Docusigned by: NORTH CAROLINA PROFESSIONAL SEAL 049754 ENGINEER J. HARRISON HOLT 1/22/2025

GENERAL NOTES

KEY PLAN

SCO# 23-2704401A

NO	REVISION	DATE

JKF ARCHITECTURE
625 LYNNDALE CT., SUITE F, GREENVILLE, NC 27858 252-355-1068

BEAUFORT COUNTY COMMUNITY COLLEGE
INDUSTRIAL TRAINING CENTER
AURORA, NC

DRAWING TITLE: MECHANICAL NOTES, LEGEND, AND SCHEDULES

SCALE	NOT TO SCALE
DRAWN	J.H.
CHECKED	J.B.D.
DATE	01-06-2025
PROJECT NO.	2024-10
DRAWING NO	M0.0

24097

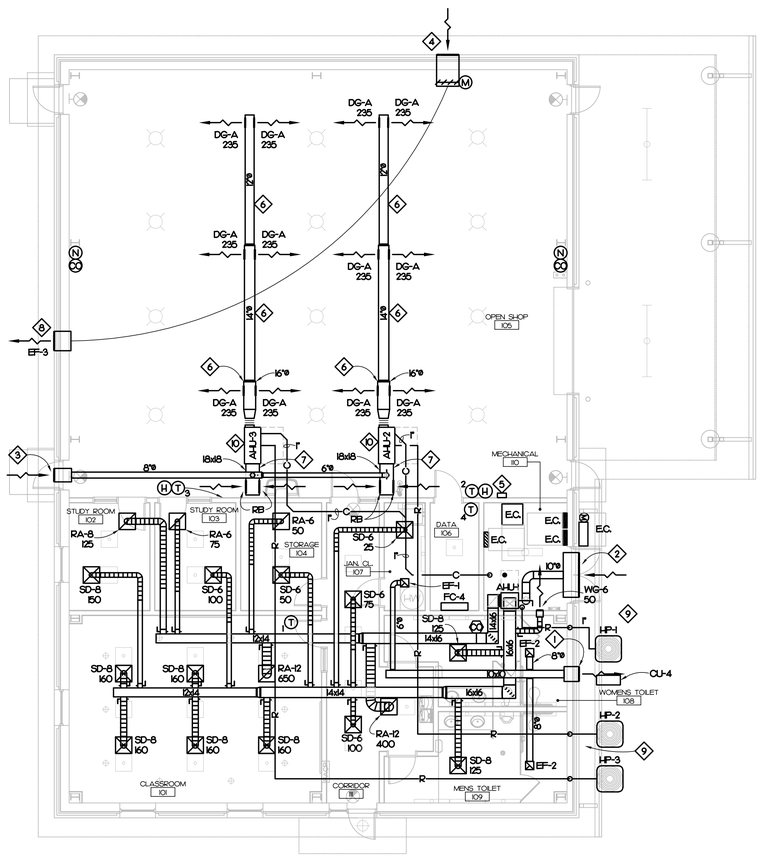

SCALE: 1/8" = 1'-0"

0 4' 8' 16'

MECHANICAL PLAN

1/8" = 1'-0"

A11

MECHANICAL KEY NOTES

1. PROVIDE GREENHECK MODEL ESD-435-20x14 EXHAUST LOUVER FOR 465 CFM AND 0.7 SQFT OF FREE AREA. PROVIDE WITH BIRD SCREEN AND KYNAR FINISH. COORDINATE FINISH AND EXACT MOUNTING HEIGHT WITH ARCHITECT PRIOR TO INSTALLATION.
2. 60X30 INTAKE LOUVER OVER DOOR. PROVIDE DUCT PLENUM AND CONNECT TO 10"Ø OUTSIDE AIR DUCT AS REQUIRED. PROVIDE LOUVER WITH KYNAR FINISH AND BIRD SCREEN. COORDINATE FINISH AND EXACT MOUNTING HEIGHT WITH ARCHITECT PRIOR TO INSTALLATION.
3. PROVIDE GREENHECK MODEL ESD-635-18x18 INTAKE LOUVER FOR 200 CFM AND 0.8 SQFT OF FREE AREA. PROVIDE WITH BIRD SCREEN AND KYNAR FINISH. COORDINATE FINISH AND EXACT MOUNTING HEIGHT WITH ARCHITECT PRIOR TO INSTALLATION.
4. PROVIDE GREENHECK MODEL EAD-635-30x28 INTAKE LOUVER FOR 2025 CFM AND 3.0 SQFT OF FREE AREA. PROVIDE WITH BIRD SCREEN AND KYNAR FINISH. COORDINATE FINISH AND EXACT MOUNTING HEIGHT WITH ARCHITECT PRIOR TO INSTALLATION. PROVIDE 120V ACTUATOR AND INTERLOCK WITH EF-3 OPERATION.
5. PROVIDE TOXIC GAS MONITORING CONTROL PANEL, SENSORS AND WIRING FOR A COMPLETE SYSTEM. PROVIDE WITH INFRARED SENSORS, AUDIBLE AND VISUAL ALARM, INTERLOCK WITH EXHAUST FAN AND INTAKE LOUVER. ELECTRICAL CONTRACTOR IS RESPONSIBLE FOR ALL 120V WIRING, SEE DETAIL 9/M2.1.
6. DUCTWORK TO BE DOUBLE WALL SPIRAL WITH PAINT GRIP FINISH. COORDINATE MOUNTING HEIGHT AND FINISH WITH ARCHITECT.
7. DUCTWORK TO BE EXPOSED RECTANGULAR DUCT WITH PAINT GRIP FINISH. PROVIDE WITH 1" INTERNAL DUCT LINER INSULATION. COORDINATE MOUNTING HEIGHT AND FINISH WITH ARCHITECT.
8. COORDINATE EXACT MOUNTING HEIGHT AND LOCATION OF EXHAUST FAN WITH ARCHITECT PRIOR TO INSTALLATION.
9. SPILL CONDENSATE INTO FLOOR DRAIN.
10. BOTTOM OF AIR HANDLING UNIT TO BE SUSPENDED 14'-0" ABOVE FINISHED FLOOR. COORDINATE EXACT MOUNTING HEIGHT AND LOCATION WITH ARCHITECT PRIOR TO INSTALLATION.

ATLANTEC ENGINEERS, PA
FOR IMEG
3223 BLUE RIDGE ROAD, SUITE B3
RALEIGH, NC 27612
(919) 571-8
24097

SEAL: NORTH CAROLINA PROFESSIONAL CORPORATION — IMEG CONSULTANTS CORP. No. F-1507

SEAL: NORTH CAROLINA PROFESSIONAL ENGINEER SEAL 049754 J. HARRISON HOLT — 1/22/2025

GENERAL NOTES

KEY PLAN

SCO# 23-2704401A

NO	REVISION	DATE

JKF ARCHITECTURE
625 LYNNDALE CT., SUITE F, GREENVILLE, NC 27858 252-355-1068

BEAUFORT COUNTY COMMUNITY COLLEGE
INDUSTRIAL TRAINING CENTER
AURORA, NC

DRAWING TITLE: MECHANICAL PLAN

SCALE	1/8" = 1'-0"
DRAWN	J.H.
CHECKED	J.B.D.
DATE	01-06-2025
PROJECT NO.	2024-10
DRAWING NO	M1.1

24097

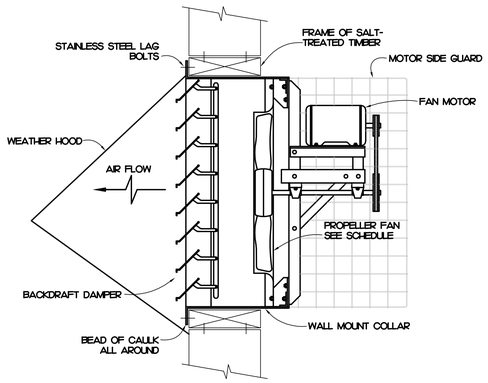

SIDEWALL EXHAUST FAN DETAIL (10)

NOT TO SCALE

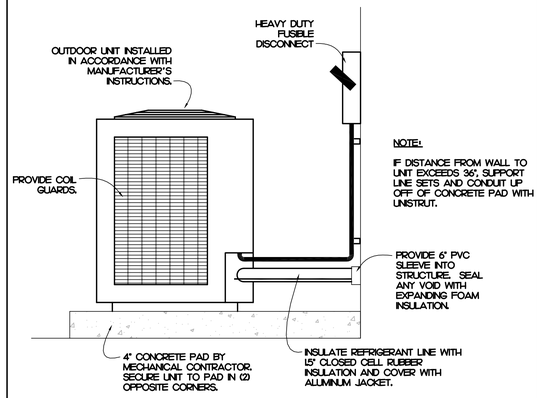

OUTDOOR UNIT DETAIL (7)

NOT TO SCALE

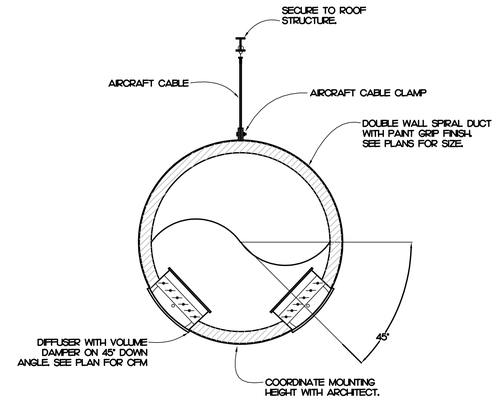

EXPOSED SPIRAL DUCT DETAIL (4)

NOT TO SCALE

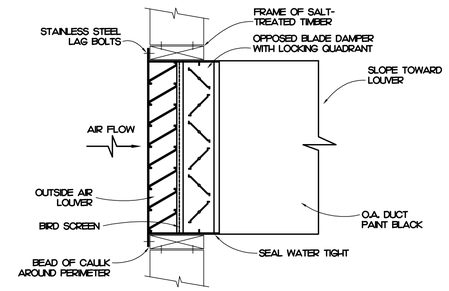

NOTE: OPENING AND FRAME PROVIDED BY THE G.C.

INTAKE LOUVER DETAIL (1)

NOT TO SCALE

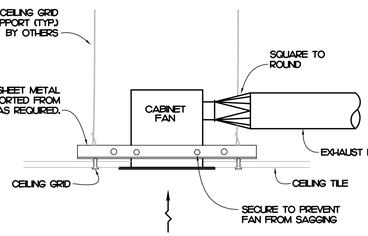

CABINET FAN DETAIL (11)

NOT TO SCALE

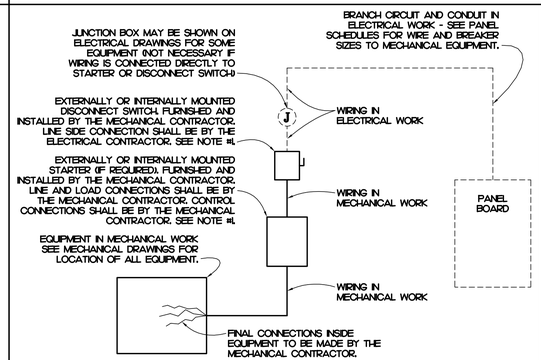

NOTE:

1. A COMBINATION STARTER MAY BE USED IN LIEU OF A SEPARATE DISCONNECT SWITCH AND STARTER.
   - COMBINATION STARTER SHALL BE FURNISHED AND INSTALLED BY THE MECHANICAL CONTRACTOR.
   - LINE AND LOAD SIDE CONNECTION SHALL BE BY THE ELECTRICAL CONTRACTOR.
   - LOAD SIDE CONNECTION SHALL BE BY THE MECHANICAL CONTRACTOR.
   - CONTROL CONNECTIONS BY THE MECHANICAL CONTRACTOR.
2. ELECTRICAL CONTRACTOR SHALL FURNISH ALL REQUIRED FUSES.

TYPICAL WIRING DETAIL (8)

NOT TO SCALE

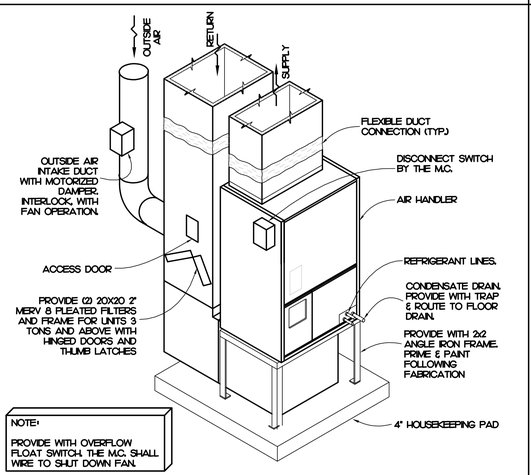

NOTE:

PROVIDE WITH OVERFLOW FLOAT SWITCH. THE M.C. SHALL WIRE TO SHUT DOWN FAN.

VERTICAL AIR HANDLER DETAIL (5)

NOT TO SCALE

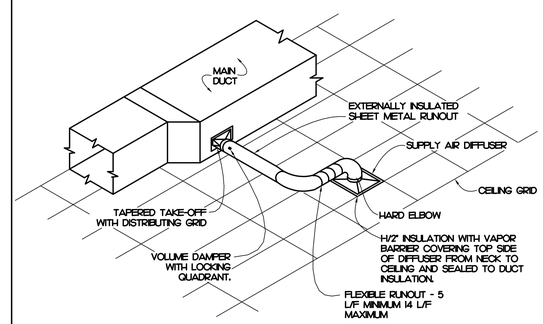

LAY-IN DIFFUSER DETAIL (2)

NOT TO SCALE

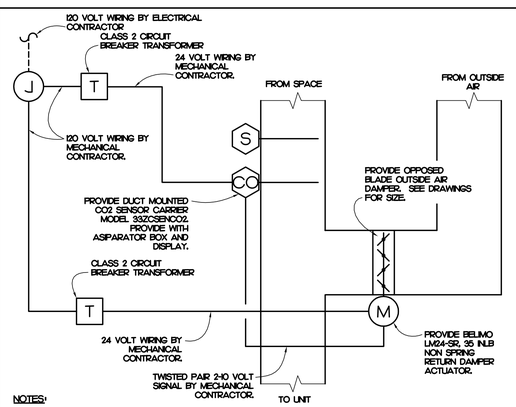

NOTES:

- ALL WIRING SHALL BE ROUTED IN ½ CONDUIT.
- MECHANICAL CONTRACTOR SHALL PROVIDE ALL WIRING, RELAYS, CONTRACTORS, ETC. FOR A COMPLETE AND OPERATIONAL SYSTEM.
- SENSOR SHALL BE CALIBRATED EVERY 6 MONTHS.
- SENSOR SHALL MODULATE OUTSIDE AIR DAMPER WHEN CARBON DIOXIDE CONCENTRATIONS EXCEED 900 PPM.
- PROVIDE THIS CONFIGURATION FOR AHU-1.

DEMAND CONTROL VENTILATION WIRING (12)

NOT TO SCALE

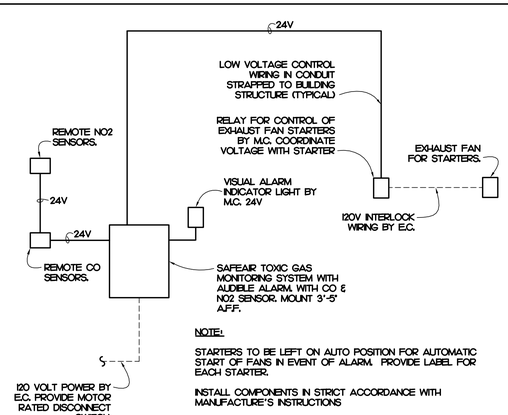

NOTE:

STARTERS TO BE LEFT ON AUTO POSITION FOR AUTOMATIC START OF FANS IN EVENT OF ALARM. PROVIDE LABEL FOR EACH STARTER.

INSTALL COMPONENTS IN STRICT ACCORDANCE WITH MANUFACTURE'S INSTRUCTIONS

TOXIC GAS WIRING DETAIL (9)

NOT TO SCALE

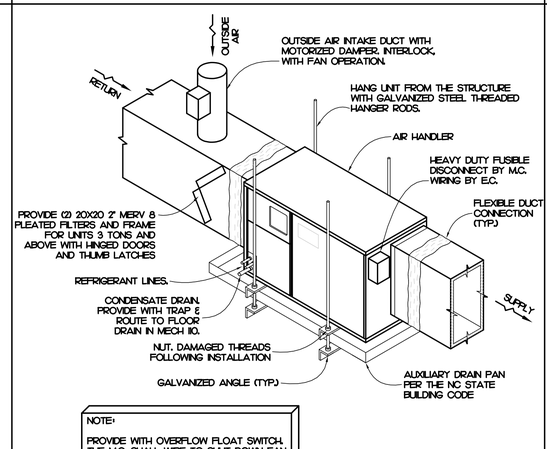

NOTE:

PROVIDE WITH OVERFLOW FLOAT SWITCH. THE M.C. SHALL WIRE TO SHUT DOWN FAN.

HORIZONTAL AIR HANDLER DETAIL (6)

NOT TO SCALE

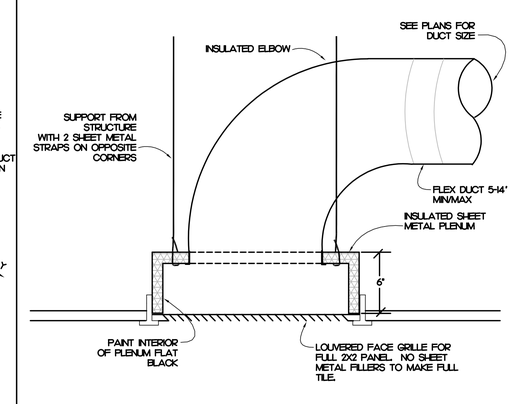

RETURN GRILLE DETAIL (3)

NOT TO SCALE

24097

ATLANTEC ENGINEERS, PA
FOR IMEG
3223 BLUE RIDGE ROAD, SUITE B3
RALEIGH, NC 27612
(919) 571-8
24097

SEAL: NORTH CAROLINA PROFESSIONAL CORPORATION — IMEG CONSULTANTS CORP. No. F-1507

SEAL: NORTH CAROLINA PROFESSIONAL SEAL 049754 ENGINEER J. HARRISON JOY — 1/22/2025

GENERAL NOTES

KEY PLAN

SCO# 23-2704401A

NO	REVISION	DATE

JKF ARCHITECTURE
625 LYNNDALE CT., SUITE F, GREENVILLE NC 27858 252-355-1068

BEAUFORT COUNTY COMMUNITY COLLEGE INDUSTRIAL TRAINING CENTER
AURORA, NC

DRAWING TITLE: MECHANICAL DETAILS

SCALE	NOT TO SCALE
DRAWN	J-H
CHECKED	JBD
DATE	01-06-2025
PROJECT NO.	2024-10
DRAWING NO	M2.1

SYMBOL LEGEND

SYMBOL	DESCRIPTION	REMARKS
	2 X 2 LAY-IN FIXTURE - LETTER DESIGNATES TYPE	SEE FIXTURE SCHED.
	SURFACE MOUNT FIXTURE - LETTER DESIGNATES TYPE	SEE FIXTURE SCHED.
	LINEAR STRIP FIXTURE - LETTER DESIGNATES TYPE	SEE FIXTURE SCHED.
	SURFACE MOUNT LIGHT FIXTURE - LETTER DESIGNATES TYPE	SEE FIXTURE SCHED.
	PENDANT/SURFACE MOUNT FIXTURE - LETTER DESIGNATES TYPE	SEE FIXTURE SCHED.
	EXTERIOR WALL LIGHT FIXTURE - LETTER DESIGNATES TYPE	SEE FIXTURE SCHED.
	EMERGENCY WITH EXIT LIGHT - CONNECT UNSWITCHED	SEE FIXTURE SCHED.
	BATTERY BACKUP EMERGENCY LIGHT - CONNECT UNSWITCHED	SEE FIXTURE SCHED.
PC	PHOTOCELL FOR LIGHTING CONTROL PANEL.	
S	SINGLE POLE TOGGLE SWITCH. MOUNT TOP OF BOX TO 48" A.F.F. UNLESS NOTED OTHERWISE. SEE NOTE #4.	HUBBELL 1221-** WITH SI COVER PLATE
S_3	THREE WAY TOGGLE SWITCH. MOUNT TOP OF BOX TO 48" A.F.F. UNLESS NOTED OTHERWISE. SEE NOTE #4.	HUBBELL 1223-** WITH SI COVER PLATE
S_4	FOUR WAY TOGGLE SWITCH. MOUNT TOP OF BOX TO 48" A.F.F. UNLESS NOTED OTHERWISE. SEE NOTE #4.	HUBBELL 1224-** WITH SI COVER PLATE
S_{M2}	WALL MOUNTED OCCUPANCY SENSOR SWITCH, DUAL TECHNOLOGIES. MOUNT TOP OF BOX TO 48" A.F.F. UNLESS NOTED OTHERWISE. SEE NOTE #4. 800W/120VAC OR 1200W/277VAC	SENSORSWITCH WSX-PDT-** S26 COVER PLATE
S_{MD}	WALL MOUNTED 0-10V DIMMING SWITCH WITH OCCUPANCY SENSOR. DUAL TECHNOLOGIES. 1000W/120VAC OR 1200W/277VAC. MOUNT TOP OF BOX TO 48" A.F.F. UNLESS NOTED OTHERWISE. SEE NOTE #4. PROVIDE SWITCHED WIRE AND 0-10V CONTROL WIRE TO FIXTURE AS REQUIRED.	SENSORSWITCH WSX-PDT-D-** S26 COVER PLATE
S_{MR}	SINGLE POLE MOTOR-RATED TOGGLE SWITCH. MOUNT 42" A.F.F. UNLESS NOTED OTHERWISE.	SEE SPECIFICATIONS
M4	CEILING MOUNTED OCCUPANCY SENSOR, DUAL TECHNOLOGIES. LOW VOLTAGE. PROVIDE LOW VOLTAGE WIRING TO POWER PACK AS REQUIRED. 28 FT. RADIUS	SENSORSWITCH CM-PDT-10
MP	POWER PACK FOR LOW VOLTAGE OCCUPANCY SENSOR. 120/277VAC, 20A 1 POLE CONTACTOR.	SENSORSWITCH FP-20
M2	CEILING MOUNTED OCCUPANCY SENSOR, DUAL TECHNOLOGIES. 800W/120VAC OR 1200W/277VAC, 12 FT. RADIUS	SENSORWORX SWX-221-2 SENSORSWITCH CMR-PDT-9
	CEILING MOUNTED OCCUPANCY SENSOR, DUAL TECHNOLOGIES. 800W/120VAC OR 1200W/277VAC, 28 FT. RADIUS	SENSORWORX SWX-221-2 SENSORSWITCH CMR-PDT-10
S_D	DIMMING SWITCH WITH PRESET TO MATCH FIXTURE. 0-10V DIMMING. MOUNT TOP OF BOX TO 48" A.F.F. UNLESS NOTED OTHERWISE. SEE NOTE #4. PROVIDE SWITCHED WIRE AND 0-10V CONTROL WIRE TO FIXTURE AS REQUIRED.	SENSORSWITCH SPODMRA-D-** S26 COVER PLATE
S_{3D}	DIMMING THREE WAY SWITCH WITH PRESET TO MATCH FIXTURE. 0-10V DIMMING. MOUNT TOP OF BOX TO 48" A.F.F. UNLESS NOTED OTHERWISE. SEE NOTE #4. PROVIDE SWITCHED WIRE AND 0-10V CONTROL WIRE TO FIXTURE AS REQUIRED.	SENSORSWITCH SPODMRA-D-** S26 COVER PLATE
	SPECIFICATION GRADE DUPLEX TAMPER RESISTANT RECEPTACLE. MOUNT BOTTOM OF BOX 16" A.F.F. UNLESS OTHERWISE NOTED. SEE NOTE #4.	HUBBELL HBL5362-**-TR WITH S8 COVER PLATE
GFI	SPECIFICATION GRADE TAMPER RESISTANT GFCI RECEPTACLE MOUNT BOTTOM OF BOX 16" A.F.F. UNLESS OTHERWISE NOTED. SEE NOTE #4.	HUBBELL GFTRST20-** WITH S26 COVER PLATE
WP	SPECIFICATION GRADE TAMPER RESISTANT, WEATHER RESISTANT AND GFCI DUPLEX RECEPTACLE WITH IN-USE WEATHER PROOF METALLIC COVER. MOUNT BOTTOM OF BOX 16" A.F.F. UNLESS OTHERWISE NOTED. SEE NOTE #4.	HUBBELL GFTWRST20-** WITH WP26E COVER PLATE
WS	SPECIFICATION GRADE WEATHER RESISTANT DUPLEX RECEPTACLE. WITH IN-USE WEATHER PROOF METALLIC COVER FOR HOT BOX. PER NEC 427.22. SEE NOTE ON PLAN FOR INSTALLATION. FED FROM GROUND FAULT PROTECTION FOR EQUIPMENT BREAKER.	HUBBELL HBL5363-**-WR WITH WP26E COVER PLATE
EWC	SPECIFICATION GRADE DUPLEX RECEPTACLE FOR WATER COOLER. MOUNT 24" A.F.F. FOR CONCEALMENT OF CORD. FED FROM GFCI CIRCUIT BREAKER.	HUBBELL HBL5362 WITH S8 COVER PLATE
	SPECIFICATION GRADE DUPLEX TAMPER RESISTANT RECEPTACLE. MOUNT BOTTOM OF BOX 16" A.F.F. UNLESS OTHERWISE NOTED. SEE NOTE #4. FED FROM GFCI CIRCUIT BREAKER.	HUBBELL HBL5362-**-TR WITH S8 COVER PLATE
	SPECIFICATION GRADE QUAD TAMPER RESISTANT RECEPTACLE MOUNT BOTTOM OF BOX 16" A.F.F. UNLESS OTHERWISE NOTED. SEE NOTE #4.	HUBBELL (2) HBL5362-**-TR WITH S82 COVER PLATE
"XX"	POWER RECEPTACLE WITH GROUND, "XX" DESIGNATES TYPE OR RATING. FIELD VERIFY NUMBER OF POLES AND NEUTRAL MOUNT BOTTOM OF BOX 16" A.F.F. UNLESS OTHERWISE NOTED. SEE NOTE #4.	HUBBELL TO MATCH EQUIPMENT
"XX", WP	POWER RECEPTACLE WITH GROUND, "XX" DESIGNATES TYPE OR RATING. FIELD VERIFY NUMBER OF POLES AND NEUTRAL WITH METALLIC WEATHERPROOF COVER PLATE MOUNT BOTTOM OF BOX 16" A.F.F. UNLESS OTHERWISE NOTED. SEE NOTE #4.	HUBBELL TO MATCH EQUIPMENT
J	JUNCTION BOX SIZED PER N.E.C.	
J	DISCONNECT SWITCH SEE PLANS FOR SIZE AND TYPE	SQUARE D HEAVY DUTY
S_{MR}	SINGLE POLE MOTOR-RATED TOGGLE SWITCH. MOUNT 42" A.F.F. UNLESS NOTED OTHERWISE.	
S_{EQ}	SINGLE POLE TOGGLE SWITCH FOR EQUIPMENT DISCONNECT MOUNT ADJACENT TO EQUIPMENT.	HUBBELL 1221-** WITH METAL COVER PLATE
	NEW CONCEALED WIRING	PER N.E.C.
	LOW VOLTAGE WIRING FOR OCCUPANCY SWITCH AND POWER PACK.	PER N.E.C.
	UNSWITCHED LIGHTING CONDUCTOR	PER N.E.C.
	HOME RUN TO PANEL BOARD NUMBERS OF ARROW INDICATE CIRCUITS	PER N.E.C.
	120/208V 3Ø, 4W PANEL BOARD - SEE PANEL SCHEDULES	SEE SPECIFICATION
	277/480V 3Ø, 4W OR 480V 3Ø, 3W PANEL BOARD/SWITCHBOARD/MCC SEE PANEL SCHEDULES	SEE SPECIFICATION
M	UTILITY METER BASE	SEE POWER RISER
TF	DRY TYPE DISTRIBUTION TRANSFORMER. SEE POWER RISER	SEE SPECIFICATION
FACP	FIRE ALARM CONTROL PANEL, FLUSH MOUNTED. ADDRESSABLE.	SEE FIRE ALARM PLAN
WAP	WIFI ACCESS OUTLET AT CEILING PANEL OR STRUCTURE WHERE NO CEILING, PROVIDE SINGLE GANG BOX AND 1" CONDUIT TO ACCESSIBLE CEILING SPACE 2 RJ45 BISCUIT JACKS WITH 2 CAT6 CABLES TO NEAREST PATCH PANEL. SEE COMMUNICATION RISER. PROVIDE WITH 2-20" SERVICE LOOPS.	2-RJ45 BISCUIT JACKS S13 COVER PLATE
	POLE MOUNT FIXTURE WITH 1 LUMINAIRES - LETTER DESIGNATES TYPE	SEE FIXTURE SCHED.

SYMBOL	DESCRIPTION	REMARKS
▼	2 PORT COMMUNICATION OUTLET. MOUNT BOTTOM OF BOX 16" A.F.F. UNLESS OTHERWISE NOTED. SEE NOTE #4. STUB 1" CONDUIT TO ACCESSIBLE CEILING SPACE 2 RJ45 JACKS WITH 2 CAT 6a CABLES TO PATCH PANEL IN DATA 106. SEE NOTE 4.	HUBBELL: 2 RJ45 JACKS NS62-** FRAME, S26 COVER PLATE
A.F.C.	ABOVE FINISHED CEILING	
A.F.F.	ABOVE FINISHED FLOOR - NOTE ALL MOUNTING DIMENSIONS GIVEN ARE TO THE BOTTOM OF THE OUTLET BOX	
B.F.F.	BELOW FINISHED FLOOR	
B.F.G.	BELOW FINISHED GRADE	

NOTE:

1. MANUFACTURERS AND PART NUMBERS SHOWN IN LEGEND ARE FOR GUIDELINE. EQUIVALENT PRODUCTS ARE ACCEPTABLE.
2. WIRING DEVICE NOTES:
   - ** DEVICE COLOR SHALL BE WHITE.
   - ALL INDOOR DEVICES SHALL BE WITH STAINLESS PLATE COVERS.
   - ACCEPTABLE PRODUCTS BY: HUBBELL, LEGRAND, EATON, LEVITON.
3. LINE VOLTAGE OCCUPANCY SWITCHES AND LOW VOLTAGE OCCUPANCY CONTROL SHOWN ON THIS PLAN ARE FOR GUIDELINE.
   - ACCEPTABLE PRODUCTS BY: SENSORWORX, ACUITY, HUBBELL, LEGRAND, EATON, LEVITON.
4. FOR WALL MOUNTED DEVICES, SEE DETAIL M10/A8J FOR TYPICAL MOUNTING HEIGHT. CONFIRM MOUNTING HEIGHT WITH ARCHITECT PRIOR TO START WORK.

2018 NORTH CAROLINA ENERGY CODE

ELECTRICAL SYSTEM AND EQUIPMENT
METHOD OF COMPLIANCE: PRESCRIPTIVE

	LIGHTING SCHEDULE:			
LAMP TYPE REQUIRED:	FLUORESCENT T8/T5	LED	CFL	INCAN
NUMBER OF LAMPS:	N/A	SEE	N/A	N/A
BALLAST TYPE USED:	N/A	FIXTURE	N/A	N/A
NUMBER OF BALLASTS:	N/A	SCHEDULE	N/A	N/A
TOTAL WATTAGE PER FIXTURE:	N/A		N/A	N/A

BASE AND ALT. BIDS (#1 AND #2)

	SPECIFIED	ALLOWED BY CODE
INTERIOR WATTAGE		
WORKSHOP BLDG.	2535	4973 **
EXTERIOR WATTAGE	ZONE 3	
BLDG ALLOWANCE	408	750
PARKING/DRIVE		

NOTES:

1. ** PER SECTION C406.3, THE WHOLE AREA ALLOWED BY CODE IS REQUIRED TO BE 10% LOWER THAN THOSE CALCULATED PER SECTION C405.4.2.
   - VALUE CALCULATE PER SECTION C405.4.2: 5526 WATTS
   - VALUE PER SECTION C406.3: 4973 WATTS
2. ALL EXTERIOR LIGHTS:
   - CONTROLLED BY PHOTOCELL THAT WILL NOT INTENDED TO BE ON FOR 24 HOUR OPERATION.
3. TYPE P1 AND P2 FIXTURES LOCATED UNDER BUILDING CANOPY ARE FOR WELDING WORK OUTSIDE BUILDING. THESE FIXTURES ARE NOT INCLUDED IN THE EXTERIOR CALCULATION PER EXCEPTION #7 OF SECTION C405.5.1.

DESIGNER STATEMENT:
TO THE BEST OF MY KNOWLEDGE AND BELIEF, THE DESIGN OF THIS BUILDING COMPLIES WITH THE ELECTRICAL SYSTEM AND EQUIPMENT REQUIREMENTS OF THE NORTH CAROLINA STATE BUILDING CODE, 2018 - ENERGY.

SIGNED: Alex Bowling
NAME: ALEX BOWLING, P.E.
TITLE: ENGINEER

GENERAL NOTES

1. THE CONTRACTOR SHALL REFER TO THE ARCHITECTURAL PLANS FOR FLOOR PLAN DIMENSIONS. DO NOT SCALE THESE DRAWINGS.
2. THE ELECTRICAL CONTRACTOR SHALL COORDINATE ANY AND ALL WORK WITH OTHER TRADES INVOLVED IN THE PROJECT, PRIOR TO THE INSTALLATION OF HIS EQUIPMENT SO AS TO AVOID CONFLICTS DURING CONSTRUCTION AND TO ALLOW FOR OPTIMUM MAINTENANCE AND WORKING SPACE.
3. USE OF THE CONDUIT SYSTEM FOR EQUIPMENT GROUNDING SHALL NOT BE ACCEPTABLE. A SEPARATE GREEN GROUND WIRE SHALL BE RUN WITH THE CIRCUIT CONDUCTORS IN EACH CONDUIT.
4. ALL BREAKER SIZES, SHOWN FOR MECHANICAL EQUIPMENT, SHALL BE VERIFIED BEFORE THE PURCHASE OR INSTALLATION OF SAID EQUIPMENT, WITH THE EQUIPMENT SUPPLIER AND THE MECHANICAL CONTRACTOR.
5. ALL WORK AND MATERIAL SHALL BE PROVIDED IN ACCORDANCE WITH THE STATE, LOCAL AND NATIONAL CODES, ORDINANCES AND 2020 NATIONAL ELECTRICAL CODE (NFPA 70).
6. EACH CONTRACTOR SHALL PROVIDE HIS OWN SUPPORT OF ALL DEVICES AND EQUIPMENT PROVIDED BY HIM AND SHALL SUPPORT SUCH EQUIPMENT PER APPROVED GOVERNING CODES OR PER APPROVAL OF THE ENGINEER. UNACCEPTABLE WORKMANSHIP OR MATERIALS SHALL BE REPLACED AT THE REQUEST OF THE ENGINEER AT THE CONTRACTOR'S EXPENSE.
7. THE MOUNTING HEIGHTS AND LOCATIONS OF ALL WALL MOUNTED OUTLETS AND JUNCTION BOXES SHALL BE REVIEWED AND COORDINATED WITH THE ARCHITECT, PRIOR TO INSTALLATION FOR USE WITH THE ACTUAL EQUIPMENT, CASEWORK, AND MILLWORK TO BE FURNISHED.
8. THE ELECTRICAL CONTRACTOR SHALL PROVIDE ALL NECESSARY DISCONNECTS, SWITCHES, AND RECEPTACLES UNDER THE ELECTRICAL BID AND SHALL INCLUDE ALL NECESSARY CIRCUITS TO AND FINAL CONNECTIONS TO THE EQUIPMENT PROVIDED BY ALL SUPPLIERS. SEE DETAILS FOR CONNECTION TO EQUIPMENT PROVIDED BY MECHANICAL AND PLUMBING CONTRACTORS.
9. PENETRATION:
   - WHERE ELECTRICAL EQUIPMENT PENETRATES RATED WALLS AND CEILINGS, EXTERIOR WALLS, THEY SHALL BE PROPERLY SEALED PER APPROVED UL METHODS.
   - WHERE ELECTRICAL EQUIPMENT PENETRATES EXTERIOR WALLS, THEY SHALL BE PROPERLY SEALED WITH METHODS APPROVED BY THE ENGINEER. SUBMIT DETAIL OF PROPOSED SEALING METHODS.
10. ALL PERMITS AND INSPECTION FEES SHALL BE SECURED AND PAID BY THE ELECTRICAL CONTRACTOR.
11. ALL WORK SHALL BE PERFORMED BY A LICENSED ELECTRICAL CONTRACTOR.
12. THE CONTRACTOR SHALL PROVIDE COMPLETE UPDATED TYPEWRITTEN PANEL SCHEDULES FOR ALL PANELBOARDS.
13. AS BUILT DRAWINGS SHALL BE GIVEN TO THE OWNER AT THE COMPLETION OF THE PROJECT.
14. THE CONTRACTOR SHALL VERIFY THE CEILING TYPES WITH THE GENERAL CONTRACTOR PRIOR TO THE PURCHASE OF ANY LIGHT FIXTURES SO THAT THE PROPER TRIM WILL BE PROVIDED FOR ALL FIXTURES. ANY DIFFERENCES WILL BE THE RESPONSIBILITY OF THIS CONTRACTOR.
15. ALL WIRE SIZES INDICATED ON THE PANEL SCHEDULES ARE BASED ON 75 DEGREE COPPER THHN/THWN WIRE. ALL WIRE TERMINALS AND EQUIPMENT SHALL BE LISTED AND APPROVED FOR 75°C. ONLY THWN-2 WIRE SHALL BE INSTALLED IN WET AND EXTERIOR LOCATION.
16. MINIMUM WIRE AND CONDUIT SIZES:
   - MINIMUM WIRE SIZE SHALL BE #12 AWG.
   - MINIMUM CONDUIT SIZE INSIDE BUILDING SHALL BE 1/2".
   - MINIMUM CONDUIT SIZE OUTSIDE BUILDING ABOVE GROUND SHALL BE 3/4".
   - MINIMUM CONDUIT SIZE UNDER GROUND SHALL BE 1".
17. ARMORED CABLE (TYPE AC) AND METAL-CLAD CABLE (TYPE MC) ARE NOT ALLOWED IN THIS PROJECT.
18. THE MAXIMUM NUMBER OF HOMERUNS IN A CONDUIT SHALL NOT EXCEED THREE (3). SHARED NEUTRAL IS NOT ALLOWED.
19. WHERE OUTLETS ARE SHOWN BACK TO BACK ON RATED WALLS, STAGGER OUTLETS SO THAT THEY ARE SEPARATED BY A MINIMUM OF 24".
20. ALL DISCONNECTS SHALL HAVE SEPARATE NEUTRAL AND GROUND BARS.
21. ALL PANELS SHALL BE THREE PHASE, FOUR WIRE UNLESS OTHERWISE NOTED.
22. BOXES AND CONDUITS SHALL NOT BE INSTALLED RECESSED IN A 3-HOUR OR HIGHER RATED WALL. WHEN OUTLETS ARE INDICATED ON THESE WALLS, FIELD COORDINATE CONDUIT AND BOX INSTALLATION.
23. FOR ALL RECEPTACLES LOCATED ABOVE COUNTER TOP, MOUNTING HEIGHT SHALL COMPLY WITH ANSI A117.1 SECTION 308. E.C. SHALL FIELD VERIFY CASEWORK DETAIL WITH ARCHITECT PRIOR TO ROUGH-IN.
24. ELECTRIC UTILITY:
   - DUKE ENERGY IS THE IS THE LOCAL UTILITY.
   - THE ELECTRICAL CONTRACTOR SHALL FIELD COORDINATE WITH ARCHITECT, ENGINEER AND UTILITY PRIOR TO ROUGH-IN FOR ANY INSTALLATION REQUIRED BY THE LOCAL UTILITY.
   - E.C. SHALL OBTAIN COST FROM THE UTILITY AND INCLUDE IN THE BID COST.
   - DUKE ENERGY CONTACT IS GLEN V. STEVENS (GLENSTEVENS@DUKE-ENERGY.COM 252-550-1079)
25. SEE SPECIFICATIONS.
26. UNDERGROUND RACEWAY
   A. RACEWAYS RUN EXTERNAL TO BUILDING FOUNDATION WALLS, WITH THE EXCEPTION OF BRANCH CIRCUIT RACEWAYS, SHALL BE ENCASED WITH A MINIMUM OF THREE (3) INCHES OF CONCRETE ON ALL SIDES.
      - ENCASED RACEWAYS MUST HAVE A MINIMUM COVER OF EIGHTEEN (18) INCHES, EXCEPT FOR RACEWAY CONTAINING CIRCUITS WITH VOLTAGES ABOVE 600V, WHICH MUST HAVE A MINIMUM COVER OF THIRTY (30) INCHES.
      - ENCASED RACEWAYS SHALL BE OF A TYPE APPROVED BY THE NEC AS "SUITABLE FOR CONCRETE ENCASEMENT".
   B. BRANCH CIRCUIT RACEWAYS RUN UNDERGROUND EXTERNAL TO BUILDING FOUNDATION WALLS SHALL BE RUN IN RACEWAYS INSTALLED IN ACCORDANCE WITH THE NEC, AND SHALL BE OF A TYPE APPROVED BY THE NEC AS "SUITABLE FOR DIRECT BURIAL." MINIMUM RACEWAY SIZE SHALL BE 1".
   C. ALL UNDERGROUND RACEWAYS SHALL BE IDENTIFIED BY UNDERGROUND LINE MARKING TAPE LOCATED DIRECTLY ABOVE THE RACEWAY AT 6 TO 8 INCHES BELOW FINISHED GRADE. TAPE SHALL BE PERMANENT, BRIGHT-COLORED, CONTINUOUS PRINTED, PLASTIC TAPE COMPOUNDED FOR DIRECT BURIAL NOT LESS THAN 6 INCHES WIDE AND 4 MILS THICK. PRINTED LEGEND SHALL BE INDICATIVE OF GENERAL TYPE UNDERGROUND LINE BELOW.
   D. RACEWAYS RUN UNDERGROUND INTERNAL TO BUILDING FOUNDATION WALLS SHALL BE OF A TYPE AND INSTALLED BY A METHOD APPROVED BY THE NEC.
   E. WHERE UNDERGROUND RACEWAYS ARE REQUIRED TO TURN UP INTO CABINETS, EQUIPMENT, ETC., AND ON TO POLES, THE ELBOW REQUIRED AND THE STUB-UP OUT OF THE SLAB OR EARTH SHALL BE OF RIGID STEEL.
   F. THE RACEWAY SYSTEM SHALL NOT BE RELIED ON FOR GROUNDING CONTINUITY.
   G. WHERE PASSING THROUGH A "BELOW GRADE" WALL FROM A CONDITIONED INTERIOR BUILDING SPACE, RACEWAYS SHALL BE SEALED UTILIZING FITTINGS SIMILAR AND EQUAL TO OZ/GEDNEY TYPE "FSK" THRU-WALL FITTING WITH "FSKA" MEMBRANE CLAMP ADAPTER IF REQUIRED.

ATLANTEC ENGINEERS, PA
now IMEG
3223 BLUE RIDGE ROAD, SUITE B3
RALEIGH, NC 27612
(919) 571-8
24097

SEAL: NORTH CAROLINA PROFESSIONAL CORPORATE SEAL — IMEG CONSULTANTS CORP. No. F-1507

SEAL: NORTH CAROLINA PROFESSIONAL SEAL 058287 ENGINEER ALEX B. BOWLING — 1/2/25

GENERAL NOTES

KEY PLAN

SCO# 23-2704401A

NO	REVISION	DATE

JKF ARCHITECTURE
625 LYNNDALE CT., SUITE F, GREENVILLE, NC 27858 252-353-1068

BEAUFORT COUNTY
COMMUNITY COLLEGE
INDUSTRIAL TRAINING CENTER
AURORA, NC

DRAWING TITLE: ELECTRICAL NOTES, LEGEND, AND DETAILS

SCALE: NOT TO SCALE	DRAWING NO: E0.1
DRAWN: AB	
CHECKED: AB	
DATE: 01-06-2025	
PROJECT NO.: 2024-10	

24097

LIGHT FIXTURE SCHEDULE

TYPE	DESCRIPTION	CATALOG	ELECTRICAL DATA	NOTES
A30	2x2 LED DIRECT/INDIRECT FIXTURE RECESSED MOUNTED PERFORATED DIRECT LIGHT SHIELD 3000 LUMEN	LITHONIA: 2AVL2-30LSE-MDR-GZ10-LP840 COLUMBIA LIGHTING: EQUAL ORACLE LIGHTING: EQUAL	3000 LUMEN LED, 4000K 0-10V ELECTRONIC DIMMING DRIVER 34 WATTS - 37 VA, 120-277V	
A40	2x2 LED DIRECT/INDIRECT FIXTURE RECESSED MOUNTED PERFORATED DIRECT LIGHT SHIELD 4000 LUMEN	LITHONIA: 2AVL2-40LSE-MDR-GZ10-LP840 COLUMBIA LIGHTING: EQUAL ORACLE LIGHTING: EQUAL	4000 LUMEN LED, 4000K 0-10V ELECTRONIC DIMMING DRIVER 48 WATTS - 53 VA, 120-277V	
A40/EM	2x2 LED DIRECT/INDIRECT FIXTURE RECESSED MOUNTED PERFORATED DIRECT LIGHT SHIELD 4000 LUMEN WITH EMERGENCY BATTERY BACKUP	LITHONIA: 2AVL2-40LSE-MDR-GZ10-LP840-EL14L COLUMBIA LIGHTING: EQUAL ORACLE LIGHTING: EQUAL	4000 LUMEN LED, 4000K 0-10V ELECTRONIC DIMMING DRIVER 48 WATTS - 53 VA, 120-277V	
B	ROUND HI-BAY LED FIXTURE CLEAR ACRYLIC REFLECTOR, NO LENS PENDANT MOUNTED 12000 LUMEN	LITHONIA: JCBL-12000LM-ACCR-MVOLT-GZ10-40K -80CRI-*** CREE LIGHTING: EQUAL HUBBELL LIGHTING: EQUAL	12000 LUMEN LED, 4000K 0-10V ELECTRONIC DIMMING DRIVER 84 WATTS, 120-277V	*** FIELD VERIFY MOUNTING HARDWARE WITH ARCHITECT MOUNT BOTTOM 16 FT. A.F.F. PROVIDE METAL ROD OR CONDUIT TO HANG FROM ROOF DECK.
C	47" ARCHITECTURAL LED WALL MOUNTED FIXTURE. UP/DOWN ASYMMETRICAL DISTRIBUTION 2300 TOTAL DELIVERED LUMEN	VISA: CVI7/16-L40K@-0-MVOLT-** PRUDENTIAL: EQUAL CORONET: EQUAL	2300 TOTAL DELIVERED LUMEN LED, 4000K 0-10V ELECTRONIC DIMMING DRIVER 32 WATTS - 36 VA, 120-277V	MOUNT TOP OF FIXTURE 8' A.F.F. FIELD VERIFY WITH ARCHITECT.
C/EM	SAME AS TYPE C EXCEPT FIXTURE TO BE USED AS AN EMERGENCY LIGHT.	VISA: CVI7/16-L40K@-0-MVOLT-** PRUDENTIAL: EQUAL CORONET: EQUAL	2300 TOTAL DELIVERED LUMEN LED, 4000K 0-10V ELECTRONIC DIMMING DRIVER 32 WATTS - 36 VA, 120-277V	MOUNT TOP OF FIXTURE 8' A.F.F. FIELD VERIFY WITH ARCHITECT. WHERE INDICATED FOR USE AS AN EMERGENCY LIGHT, PROVIDE WITH EMERGENCY LIGHTING INVERTER, IOTA: IES-50-1 OR EQUAL BY DUAL-LITE, MYERS, ACUITY, EELP
D	6" LED CAN RECESSED MOUNTED, FLANGED DOWNLIGHT TRIM MEDIUM WIDE DISTRIBUTION (52°) 2000 LUMEN	MAXILUME: HH6-LED-2000L-DIM10-MVD-40K-90- HH6-650I GOTHAM: EQUAL PRESCOLITE: EQUAL	2000 LUMEN LED, 4000K 0-10V ELECTRONIC DIMMING DRIVER 20 WATTS - 23 VA, 120-277V	
F/EM	LED FIXTURE SURFACE MOUNTED 2400 LUMEN WET LOCATION LISTED EMERGENCY BATTERY BACKUP	GARDCO: SVFG-A01-840-TIR-SUR-120V-EM GOTHAM: EQUAL PRESCOLITE: EQUAL	2000 LUMEN LED, 4000K 0-10V ELECTRONIC DIMMING DRIVER 21 WATTS, 120-277V	
G	1 LED POLE LIGHT 4000K, 18000 LUMENS 20 FT. STEEL ROUND POLE TO MATCH ADJUSTABLE ARM MOUNT PHOTOCELL	GARDCO: P26-A03-840-T4M--ARM-120V-0-10V-PCB LITHONIA LIGHTING: EQUAL COLUMBIA LIGHTING: EQUAL	18000 LUMEN LED, 4000K 0-10V ELECTRONIC DIMMING DRIVER 103 WATTS, 120V	** FINISH COLOR PER ARCHITECT INSTRUCTION. ORDER WITH 4" ROUND STRAIGHT STEEL POLE. CONFIRM POLE FOR 140MPH EPA. GARDO:SRS-CB-4-11-20 ATLAS: EQUAL LITHONIA: EQUAL
S4	4 FT. LED STRIP LIGHT PENDANT OR SURFACE MOUNTED 4000 LUMEN	LITHONIA: CSS-L48-4000LM-MVOLT-40K-80CRI COLUMBIA LIGHTING: EQUAL ORACLE LIGHTING: EQUAL	4000 LUMEN LED, 4000K 0-10V ELECTRONIC DIMMING DRIVER 35 WATTS - 40 VA, 120-277V	
P1	8 FT. VAPOR TIGHT LED FIXTURE POLYCARBONATE FROSTED LENS PENDANT MOUNTED LISTED FOR WET LOCATION, IP66 AND -20°F TO 120°F 9000 LUMEN, MEDIUM DISTRIBUTION	LITHONIA: FEM-L96-9000LM-LPPFL-MD-MVOLT -GZ10-40K-80CRI-DPMB COLUMBIA LIGHTING: EQUAL ORACLE LIGHTING: EQUAL	9000 LUMEN LED, 4000K 0-10V ELECTRONIC DIMMING DRIVER 53.4 WATTS, 120-277V	
W	EXTERIOR WALL MOUNTED CUT-OFF TRAPEZOIDAL SHAPE 2944 LUMEN LISTED FOR WET LOCATION AND 0°F	GARDCO: 10L-16L-530-NW-GI-2--UNV HUBBELL LIGHTING: EQUAL NLS: EQUAL	2944 LUMEN LED, 4000K ELECTRONIC DRIVER 28 WATTS, 120-277V	** FINISH COLOR PER ARCHITECT INSTRUCTION. MOUNT APPROX. 12' A.F.F. SEE ARCHITECTURAL ELEVATION FOR LOCATION AND HEIGHT.
W/EM	EXTERIOR WALL MOUNTED CUT-OFF TRAPEZOIDAL SHAPE 2944 LUMEN LISTED FOR WET LOCATION AND 0°F WITH EMERGENCY BATTERY BACKUP	GARDCO: 10L-16L-530-NW-GI-2-EBPC-UNV HUBBELL LIGHTING: EQUAL NLS: EQUAL	2944 LUMEN LED, 4000K ELECTRONIC DRIVER 28 WATTS, 120-277V	** FINISH COLOR PER ARCHITECT INSTRUCTION. MOUNT APPROX. 12' A.F.F. SEE ARCHITECTURAL ELEVATION FOR LOCATION AND HEIGHT.
EGX	EMERGENCY WITH EXIT LIGHT 1 SIDE GREEN LETTER	LITHONIA: LHQM-LED-G MAXILUME: EQUAL DUAL-LITE: EQUAL	(2) 1.5W LED HEADS, LED FOR PANEL 4.3 WATTS - 11 VA, 120/277V	
EG	EMERGENCY LIGHT 220 LUMEN TOTAL	LITHONIA: ELM2L-M12 MAXILUME: EQUAL DUAL-LITE: EQUAL	(2) 1.2W LED HEADS 1 WATTS - 5 VA, 120-277V	

24097

ATLANTEC
ENGINEERS, PA
now IMEG
3223 BLUE RIDGE ROAD, SUITE 113
RALEIGH, NC 27612
(919) 571-111
24097

SEAL

NORTH CAROLINA PROFESSIONAL CORPORATION
IMEG CONSULTANTS CORP.
No. F-1507

SEAL

NORTH CAROLINA PROFESSIONAL
SEAL 058287
ENGINEER
ALEX B. BOWLING

GENERAL NOTES

KEY PLAN

SCO# 23-2704401A

NO	REVISION	DATE

JKF ARCHITECTURE

625 LYNNDALE CT., SUITE F, GREENVILLE, NC 27858 252-355-1068

BEAUFORT COUNTY
COMMUNITY COLLEGE
INDUSTRIAL TRAINING CENTER
AURORA, NC

DRAWING TITLE
LIGHT FIXTURE SCHEDULE

SCALE: NOT TO SCALE
DRAWN: AB
CHECKED: AB
DATE: 01-06-2025
PROJECT NO.: 2024-10
DRAWING NO: E0.2

NOTES:

1. ALL UNDERGROUND EXTERIOR CONDUIT IS TO BE CONCRETE ENCASED. SEE SPECIFIACTIONS.

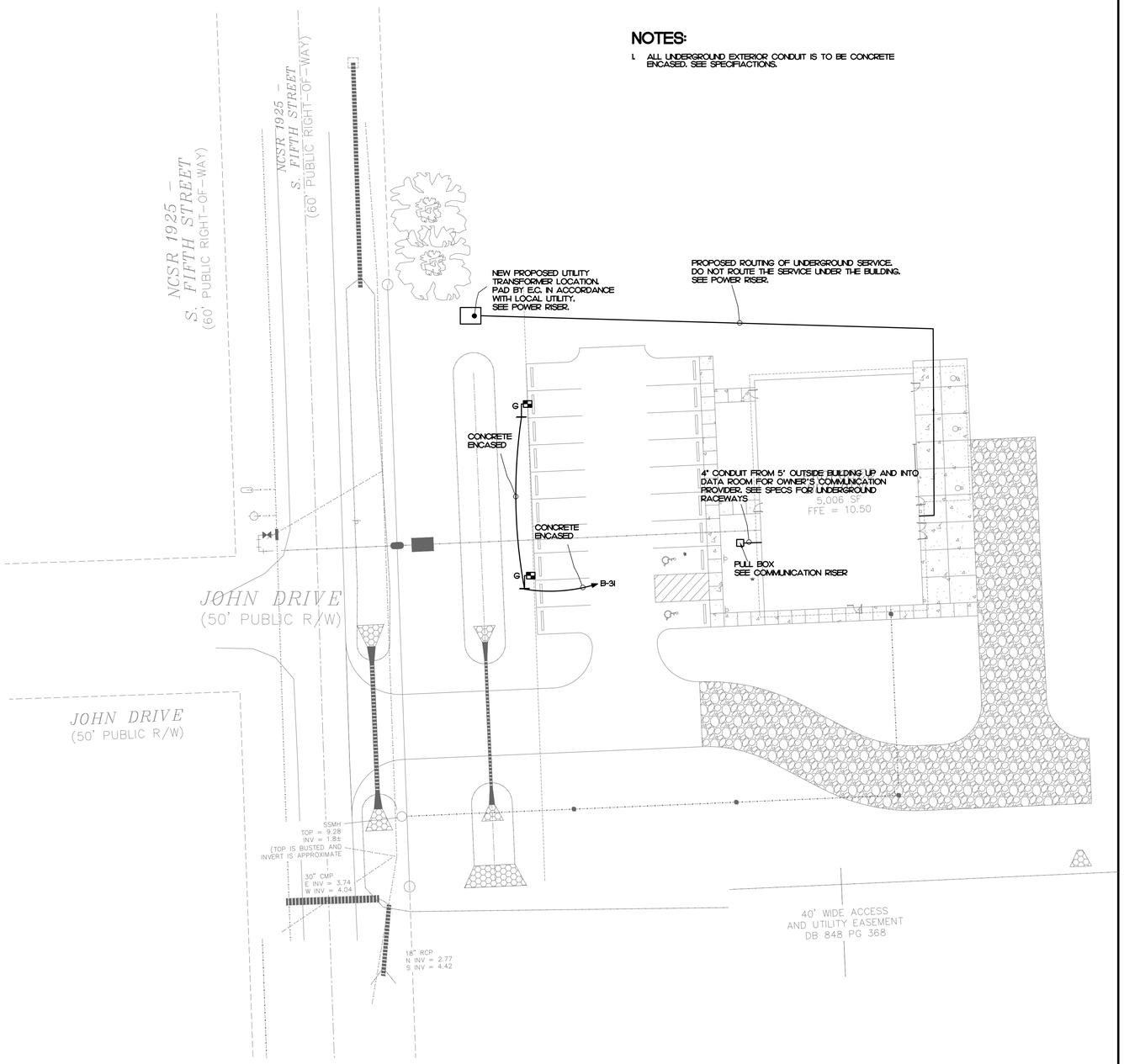

ELECTRICAL SITE PLAN (1)

SCALE: 1" = 20'-0"

POLE BASE DETAIL

NTS

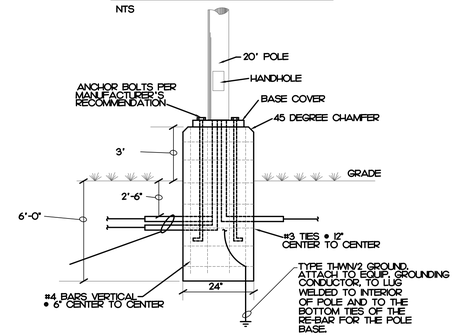

1. SEE POLE MANUFACTURER INFORMATION FOR FURTHER INFORMATION. MANUFACTURER INFORMATION SHALL SUPERCEDE THE INFORMATION SHOWN ABOVE.

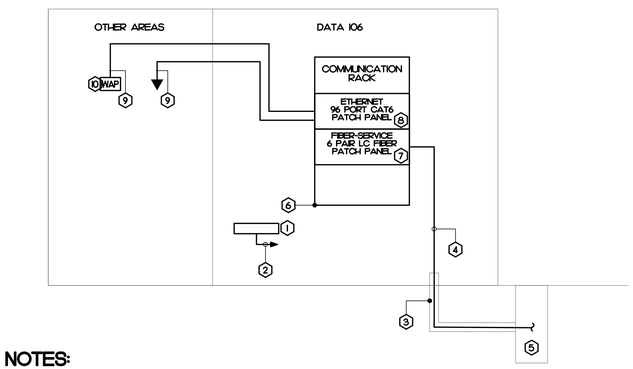

KEY NOTES:

1. TELECOMMUNICATION GROUNDING BUSBAR (TGB)
   - 0.25" THICK SOLID COPPER.
   - 4" HIGH AND 20" LONG.
   - SHALL HAVE 30 ATTACHMENT POINTS (TWO ROWS OF 15 EACH) FOR TWO-HOLE GROUNDING LUGS.
   - WITH WALL-MOUNT STANDOFF BRACKETS, ASSEMBLY, SCREW AND INSULATORS CREATING 4" STANDOFF FROM WALL.
   - UL LISTED FOR GROUNDING AND BONDING EQUIPMENT.
2. 1-#6G CU IN 1/2" CONDUIT TO MAIN GROUNDING AT SERVICE DISCONNECT. FIELD VERIFY ROUTING WITH ARCHITECT PRIOR TO ROUGH-IN.
3. COMMUNICATION SERVICE CONDUITS.
   - 1 - 4" CONDUITS ENCASED IN CONCRETE DUCT BANK.
   - EACH CONDUIT WITH MAXCELL EDGE 4" 2-CELL INNERDUCT OR EQUAL.
   - SEE ELECTRICAL SITE PLAN FOR ROUTING.
   - SEAL CONDUIT END AFTER WIRING AS REQUIRED. FOR UNUSED CONDUITS, PROVIDE CAP.
   - SEE SPECIFICATION.
4. SINGLE MODE, 6-PAIR FIBER OPTIC CABLE BY E.C. AND TERMINATED AT NEW FIBER HEAD-IN. CONTRACTOR TO GROUND OR BOND PER NEC 770.100 AS REQUIRED. ROUTE BACK TO MAIN CAMPUS SERVER ROOM. COORDINATE WITH OWNER.
5. NEW OPEN BOTTOM, 24" X 36", CONCRETE REINFORCED, FIBER PULL BOX WITH TRAFFIC RATED COVER. PROVIDE ADDITIONAL PULL BOXES AS REQUIRED. FIELD COORDINATE EXACT LOCATION WITH OTHER TRADES PRIOR TO ROUGH-IN. SEE ELECTRICAL SITE PLAN.
6. PROVIDE 13U WALL MOUNTED 19" RACK PER OWNER INSTRUCTION.
7. PROVIDE FIBER HEAD-IN FOR SINGLE MODE, 6-PAIR FIBER OPTIC CABLE. PROVIDE WITH LC CONNECTORS.
8. PROVIDE 96 PORTS OF CAT6 PATCH PANEL.
9. 2 CAT6 CABLES.
10. PROVIDE WITH 20' SERVICE LOOPS AT WIRELESS ACCESS POINT LOCATIONS.

NOTES:

1. FOR ALL COMMUNICATION DROPS:
   - PROVIDE 1C (MIN) WHERE THERE IS NO ACCESSIBLE CEILING SPACE.
   - EXPOSED WIRING WITH J-HOOK IS ALLOWED IN ACCESSIBLE CEILING SPACE. PROVIDE PLENUM RATED CABLE WHERE APPLICABLE.
   - SEE SPECIFICATION.
2. CAT6e CABLE RJ45 TERMINATIONS TO FOLLOW TYPE T568B PINOUT TERMINATION. CONFIRM WITH OWNER PRIOR TO PURCHASE.
3. SEE SPECIFICATION.

COMMUNICATION RISER (2)

NOT TO SCALE

ATLANTEC ENGINEERS, PA
now IMEG
3223 BLUE RIDGE ROAD, SUITE B3
RALEIGH, NC 27612
(919) 571-111

24097

SEAL: NORTH CAROLINA PROFESSIONAL CORPORATION — IMEG CONSULTANTS CORP. No. F-1507

SEAL: NORTH CAROLINA PROFESSIONAL ENGINEER SEAL 058287 ALEX B. BOWLING — 1/2/2025

GENERAL NOTES

KEY PLAN

SCO# 23-2704401A

NO	REVISION	DATE

JKF ARCHITECTURE
625 LYNNDALE CT., SUITE F, GREENVILLE, NC 27858 252-353-1068

BEAUFORT COUNTY COMMUNITY COLLEGE INDUSTRIAL TRAINING CENTER

AURORA, NC

DRAWING TITLE: ELECTRICAL SITE PLAN

SCALE	1/8" = 1'-0"
DRAWN	AB
CHECKED	AB
DATE	01-06-2025
PROJECT NO.	2024-10
DRAWING NO	E1.0

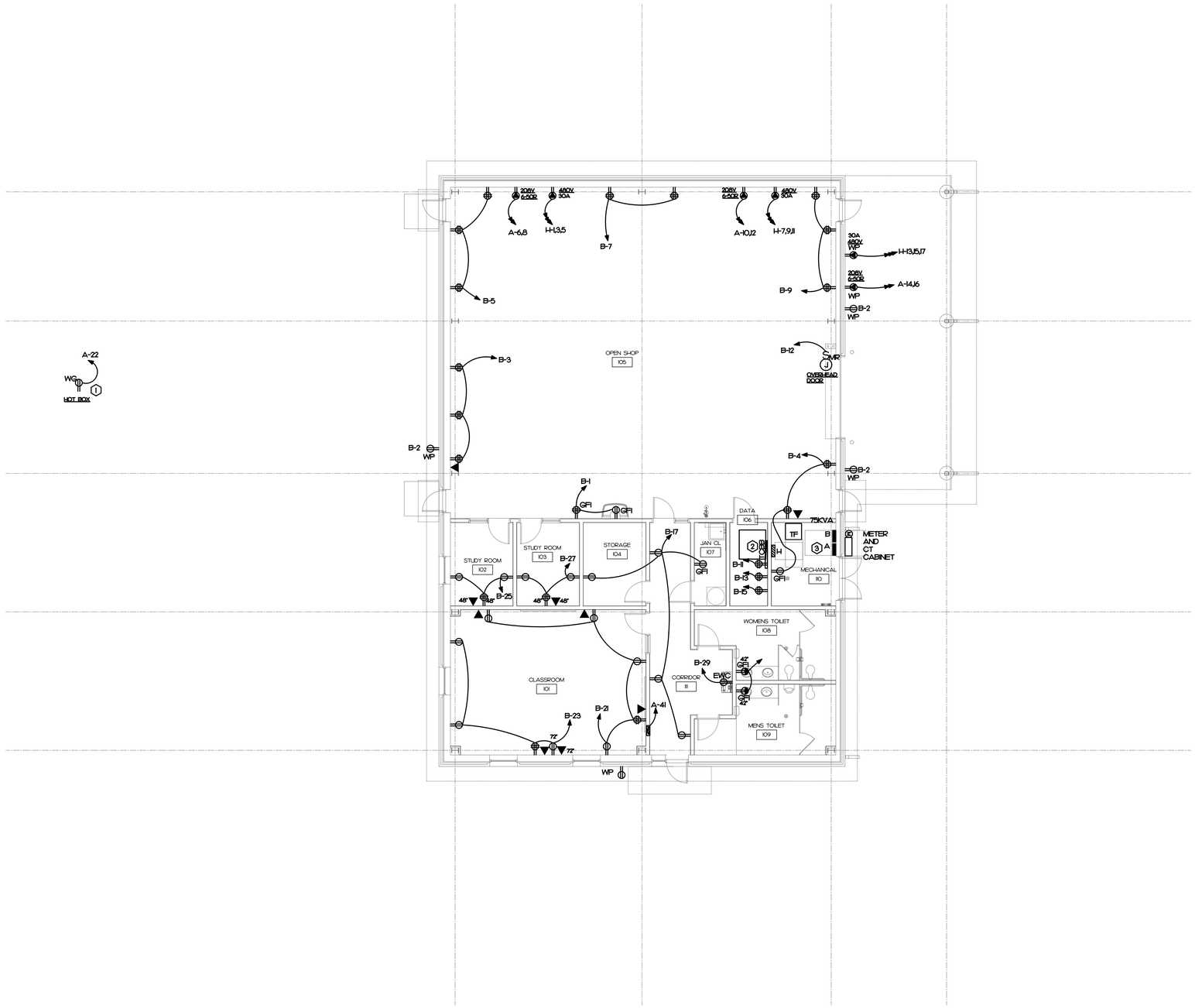

ELECTRICAL PLAN

SCALE: 1/8" = 1'-0"

1

24097

KEY NOTES

1. FIELD COORDINATE WEATHERPROOF GFPE PROTECTED DUPLEX RECEPTACLE WITH LOCATION OF HOT BOX.
2. COMMUNICATION BOARD. (SEE COMMUNICATION RISER)
   - 1-4" CONDUIT WITH PULLWIRE STUBBED TO EXTERIOR FOR OWNER INSTALLED FIBER OPTIC CABLE (SEE ELECTRICAL SITE PLAN)
   - CONDUITS SHALL BE ENCASED IN CONCRETE. SEE GENERAL NOTE #26, FIELD VERIFY LOCATION WITH OWNER PRIOR TO ROUGH-IN.
   - MOUNT RECEPTACLES ON BACKBOARD TO ACCOMMODATE EQUIPMENT.
   - PROVIDE GROUND BAR AND 1-#6G CU IN 1/2" TO MAIN GROUND BAR.
3. 4' CLEARANCE PER NEC 110.26.

EQUIPMENT LIST

ITEM NO.	TYPE	QTY	VOLT	PHASE	AMPS	Ref	CONNECTION	NOTES
1	WELDER	3	208	1	46		NEMA 6-50	TYPICAL FOR PORTABLE WELDER
2	WELDER	3	480	3	17.5	13.7		TYPICAL FOR PORTABLE WELDER

ATLANTEC ENGINEERS, PA
now IMEG
3223 BLUE RIDGE ROAD, SUITE B3
RALEIGH, NC 27612
(919) 571-111
24097

SEAL

NORTH CAROLINA PROFESSIONAL CORPORATION
IMEG CONSULTANTS CORP.
No. F-1507

SEAL

NORTH CAROLINA PROFESSIONAL ENGINEER
SEAL 058287
ALEX R. BOWLING
1/24/25

GENERAL NOTES

KEY PLAN

SCO# 23-2704401A

NO	REVISION	DATE

JKF ARCHITECTURE

625 LYNNDALE CT., SUITE F, GREENVILLE, NC 27858 252-355-1068

BEAUFORT COUNTY COMMUNITY COLLEGE INDUSTRIAL TRAINING CENTER

AURORA, NC

DRAWING TITLE: ELECTRICAL PLAN

SCALE	1/8" = 1'-0"
DRAWN	AB
CHECKED	AB
DATE	01-06-2025
PROJECT NO.	2024-10
DRAWING NO	E1.1

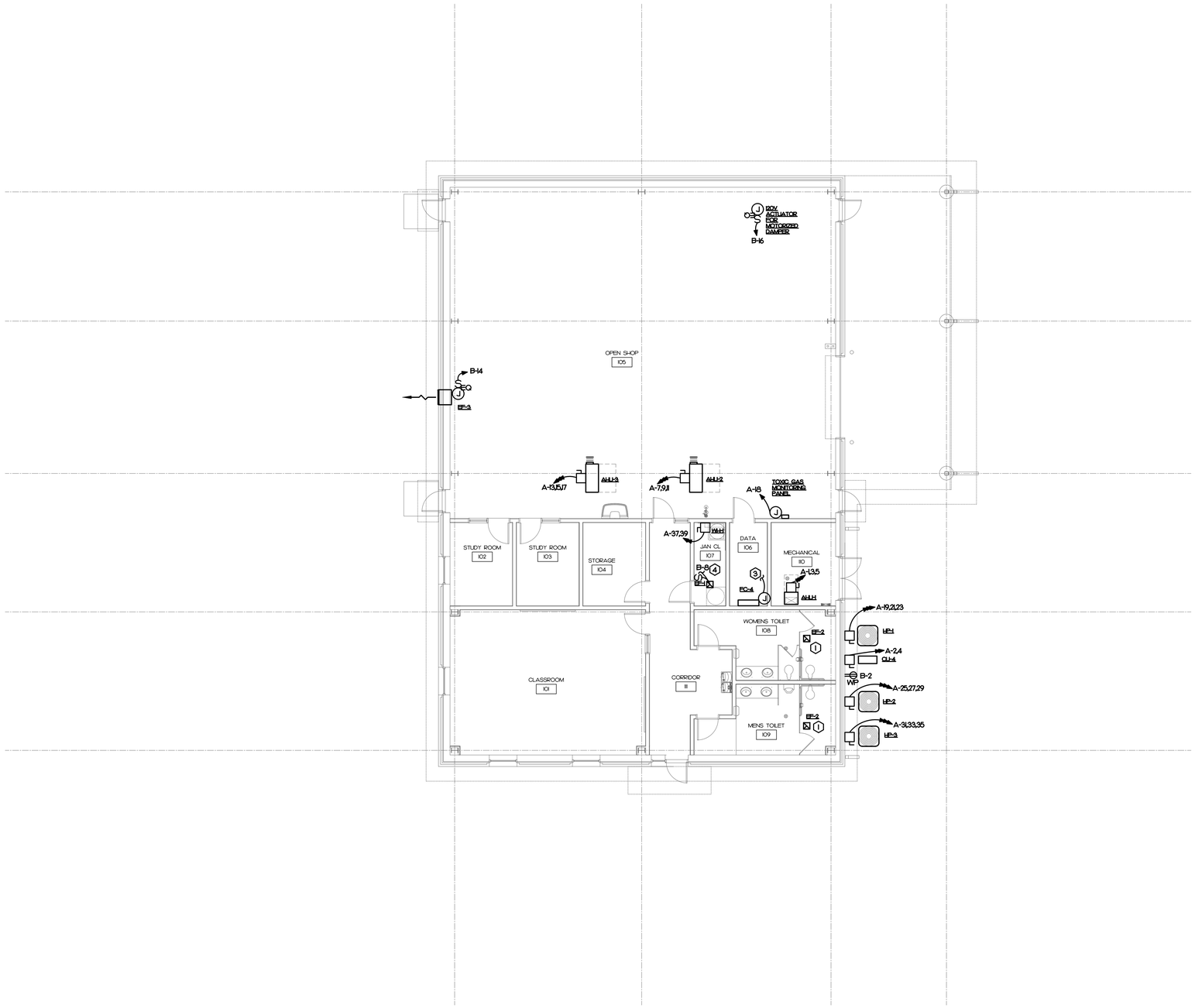

ELECTRICAL PLAN

SCALE: 1/8" = 1'-0"

1

KEY NOTES

1. SEE LIGHTING PLAN
2. TOXIC GAS MONITORING CONTROL PANEL, SENSORS AND WIRING FOR A COMPLETE SYSTEM. PROVIDE WITH INFRARED SENSORS, AUDIBLE AND VISUAL ALARM. INTERLOCK WITH EXHAUST FAN AND INTAKE LOUVER. ELECTRICAL CONTRACTOR IS RESPONSIBLE FOR ALL 120V WIRING.
3. INDOOR UNIT POWERED BY OUTDOOR UNIT.
4. CONNECT TO LIGHTING CIRCUIT IN THIS AREA.

ATLANTEC ENGINEERS, PA
now IMEG
3223 BLUE RIDGE ROAD, SUITE 113
RALEIGH, NC 27612
(919) 571-111
24097

SEAL

NORTH CAROLINA PROFESSIONAL CORPORATION
IMEG CONSULTANTS CORP.
No. F-1507

SEAL

NORTH CAROLINA PROFESSIONAL
SEAL 058287
ENGINEER
ALEX R. BOWLING

1/3/25

GENERAL NOTES

KEY PLAN

SCO# 23-2704401A

NO	REVISION	DATE

JKF ARCHITECTURE
625 LYNNDALE CT, SUITE F, GREENVILLE, NC 27858 252-355-1068

BEAUFORT COUNTY COMMUNITY COLLEGE INDUSTRIAL TRAINING CENTER

AURORA, NC

DRAWING TITLE

ELECTRICAL CONNECTIONS PLAN

SCALE 1/8" = 1'-0"	DRAWING NO E1.2
DRAWN AB	
CHECKED AB	
DATE 01-06-2025	
PROJECT NO. 2024-10	

24097

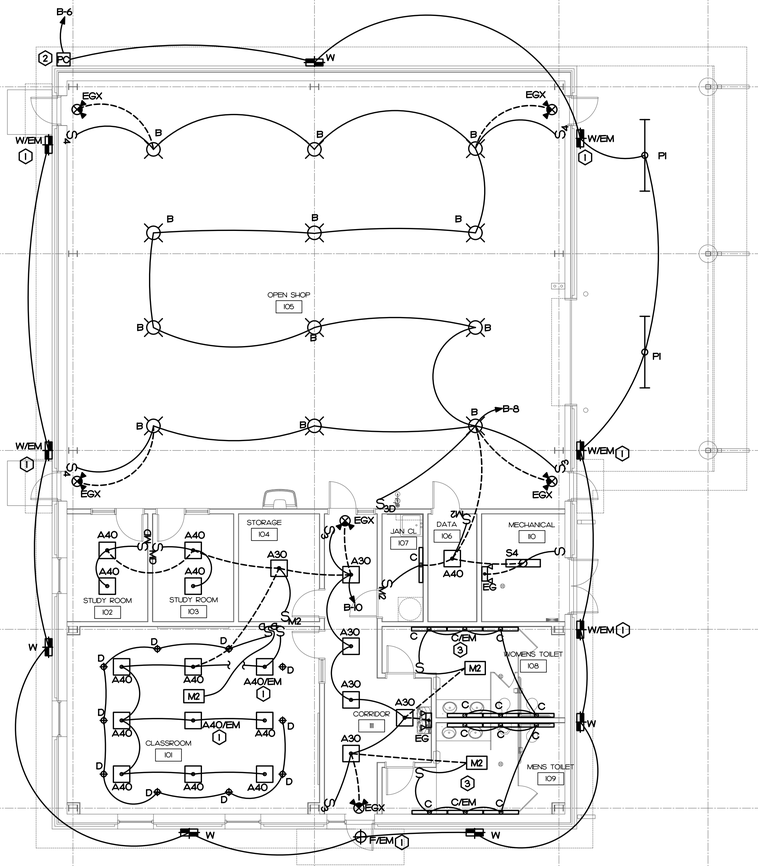

LIGHTING PLAN

SCALE: 1/8" = 1'-0"

1

KEY NOTES

1. LIGHT FIXTURE TO BE USED AS EMERGENCY LIGHT. CONNECT BATTERY BACKUP TO LOCAL LIGHTING CIRCUIT UNSWITCHED.
2. FIELD COORDINATE EXACT LOCATION OF PHOTOCELL.
3. LIGHT FIXTURE TO USED AS EMERGENCY LIGHT. CONNECT INVERTER TO LOCAL LIGHTING CIRCUIT UNSWITCHED.

LIGHT LEVEL TABLE

ROOM		AVERAGE LIGHT LEVEL AT 30" A.F.F.
101	CLASSROOM	87.1 FC
102	STUDY ROOM	37.3 FC
103	STUDY ROOM	37.3 FC
104	STORAGE	15.2 FC
105	OPEN SHOP	50.4 FC
106	DATA	23.4 FC
107	JANITOR CLOSET	4.3 FC
108	WOMENS TOILET	18.5 FC
109	MENS TOILET	18.5 FC
110	MECHANICAL	20.8 FC
111	OFFICE	32.4 FC

ATLANTEC ENGINEERS, PA
now IMEG
3223 BLUE RIDGE ROAD, SUITE 103
RALEIGH, NC 27612
(919) 571-111

24097

SEAL: NORTH CAROLINA PROFESSIONAL CORPORATION — IMEG CONSULTANTS CORP. No. F-1507

SEAL: NORTH CAROLINA PROFESSIONAL ENGINEER — SEAL 058287 — ALEX R. BOWLING — 1/24/25

GENERAL NOTES

KEY PLAN

SCO# 23-2704401A

NO	REVISION	DATE

JKF ARCHITECTURE

625 LYNNDALE CT., SUITE F, GREENVILLE, NC 27858 252-355-1068

BEAUFORT COUNTY COMMUNITY COLLEGE
INDUSTRIAL TRAINING CENTER
AURORA, NC

DRAWING TITLE: LIGHTING PLAN

SCALE	1/8" = 1'-0"
DRAWN	AB
CHECKED	AB
DATE	01-06-2025
PROJECT NO.	2024-10
DRAWING NO	E2.1

POWER RISER DIAGRAM

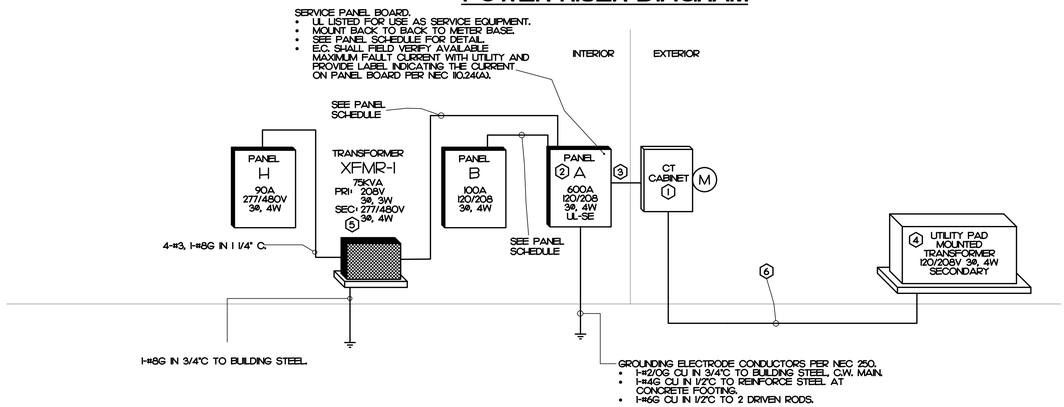

KEY NOTES

1. NEW CT/METER PER UTILITY SPECIFICATIONS.
2. NEW PANELBOARD. SEE PANEL SCHEDULE.
3. 2 SETS OF 4-#350KCMIL AWG IN 3"
4. UTILITY PAD MOUNTED TRANSFORMER
   - PAD BY E.C. PER UTILITY SPEC.
5. STEP UP TRANSFORMER TO BE PROVIDED AND INSTALLED BY CONTRACTOR.
6. NEW UNDERGROUND SERVICE CONDUCTORS BY E.C. PROVIDE 2 SETS OF 4-#350 IN 3" CONDUITS ENCASED IN CONCRETE. SPECIFICATION SECTION 26 05 45.

NOTES:

1. CONTRACTOR TO OBTAIN AND POST THE AVAILABLE FAULT CURRENT FROM THE LOCAL UTILITY.

PANEL A

120/208V, 3 PHASE, 4 WIRE

CKT	DESCRIPTION	KVA	C	G	W	CB	CKT	CKT	CB	W	G	C	KVA	DESCRIPTION	CKT
1	AHU-1	4.3	1	10	8	45	1	2	15	12	12	1/2	0.9	CU-4,FC-4	2
3		4.3			8	3P	3	4	2P	12			0.9		4
5		4.3			8		5	6	50	6	8	3/4	5.0	MOBILE WELDER	6
7	AHU-2	2.9	3/4	10	10	30	7	8	2P	6			5.0		8
9		2.9			10	3P	9	10	50	6	8	3/4	5.0	MOBILE WELDER	10
11		2.9			10		11	12	2P	6			5.0		12
13	AHU-3	2.9	3/4	10	10	30	13	14	50	6	8	3/4	5.0	NOTE 4 MOBILE WELDER	14
15		2.9			10	3P	15	16	2P	6			5.0		16
17		2.9			10		17	18	20	12	12	1/2	0.3	TOXIC GAS MONITOR	18
19	HP-1	1.8	3/4	10	10	30	19	20					0.6	SPACE ONLY	20
21		1.8			10	3P	21	22	20	12	12	1/2	0.5	NOTE 2 HOT BOX	22
23		1.8			10		23	24					0.0	SPACE ONLY	24
25	HP-2	1.8	3/4	10	10	30	25	26					0.0	NOTE 5 TVSS	26
27		1.8			10	3P	27	28					0.0		28
29		1.8			10		29	30					0.0		30
31	HP-3	1.8	3/4	10	10	30	31	32	225	4/0	4	2 1/2	25.0	XFMR 75KVA	32
33		1.8			10	3P	33	34	3P	4/0			25.0		34
35		1.8			10		35	36		4/0			25.0		36
37	WH-1	2.3	3/4	10	10	30	37	38	100	3	8	1 1/4	6.6	PANEL B	38
39		2.3			10	2P	39	40	3P	3			6.8		40
41	FIRE ALARM CIRCUIT NOTE 3	0.2	1/2	12	12	20	41	42		3			6.0		42

DESCRIPTION	CONNECTED KVA	DEMAND FACTOR	DEMAND KVA
CONT. LOAD	3.34	125%	4.18
RECEPTACLE	14.12	100%/50%	12.06
MTRS/COOLS	25.14	100%	25.14
HEATS	25.20	100%	25.20
WATER HEATER	4.50	100%	4.50
EQUIPMENT	76.20	100%	76.20
KITCHEN EQUIP.	0.00	65%	0.00
WELDER	29.95	NEC 630.11	29.76
25% OF LARGEST HVAC/MOTOR			3.25
TOTAL DEMAND			180.28

600 A MINIMUM BUS SIZE
600 A MAIN CIRCUIT BREAKER
65 K MINIMUM AIC RATING

SURFACE MOUNTING
NEMA 1 ENCLOSURE
GROUND BAR
UL LISTED FOR USE AS SERVICE EQUIPMENT

NOTES
1. SEE SPECIFICATIONS
2. E.C. TO PROIVIDE GFPE BREAKER
3. PROVIDE RED IDENTIFICATION AND LOCK ON PROVISION PER NFPA 70,760.41
4. PROVIDE WITH GFI BREAKER
5. PROVIDE WITH 120KA-RATED TYPE II SPD WITH DISCONNECT

CONNECTED LOADS	
PHASE A:	60.7 KVA
PHASE B:	60.9 KVA
PHASE C:	56.9 KVA
TOTAL:	178.4 KVA
DEMAND	500 AMP

PANEL H

277/480V, 3 PHASE, 4 WIRE

CKT	DESCRIPTION	KVA	C	G	W	CB	CKT	CKT	CB	W	G	C	KVA	DESCRIPTION	CKT
1	WELDER	3.8	3/4	10	10	30	1	2	--	--	--	--	0.0	SPACE ONLY	2
3	MOBILE	3.8	--	--	10	3P	3	4	--	--	--	--	0.0	SPACE ONLY	4
5		3.8	--	--	10	--	5	6	--	--	--	--	0.0	SPACE ONLY	6
7	WELDER	3.8	3/4	10	10	30	7	8	--	--	--	--	0.0	SPACE ONLY	8
9	MOBILE	3.8	--	--	10	3P	9	10	--	--	--	--	0.0	SPACE ONLY	10
11		3.8	--	--	10	--	11	12	--	--	--	--	0.0	SPACE ONLY	12
13	WELDER NOTE 2	3.8	3/4	10	10	30	13	14	--	--	--	--	0.0	SPACE ONLY	14
15	MOBILE	3.8	--	--	10	3P	15	16	--	--	--	--	0.0	SPACE ONLY	16
17		3.8	--	--	10	--	17	18	--	--	--	--	0.0	SPACE ONLY	18
19	SPACE ONLY	0.0	--	--	--	--	19	20	--	--	--	--	0.0	SPACE ONLY	20
21	SPACE ONLY	0.0	--	--	--	--	21	22	--	--	--	--	0.0	SPACE ONLY	22
23	SPACE ONLY	0.0	--	--	--	--	23	24	--	--	--	--	0.0	SPACE ONLY	24
25	SPACE ONLY	0.0	--	--	--	--	25	26	--	--	--	--	0.0	SPACE ONLY	26
27	SPACE ONLY	0.0	--	--	--	--	27	28	--	--	--	--	0.0	SPACE ONLY	28
29	SPACE ONLY	0.0	--	--	--	--	29	30	--	--	--	--	0.0	SPACE ONLY	30
31	NA	0.0	--	--	--	--	31	32	--	--	--	--	0.0	NA	32
33	NA	0.0	--	--	--	--	33	34	--	--	--	--	0.0	NA	34
35	NA	0.0	--	--	--	--	35	36	--	--	--	--	0.0	NA	36
37	NA	0.0	--	--	--	--	37	38	--	--	--	--	0.0	NA	38
39	NA	0.0	--	--	--	--	39	40	--	--	--	--	0.0	NA	40
41	NA	0.0	--	--	--	--	41	42	--	--	--	--	0.0	NA	42

DESCRIPTION	CONNECTED KVA	DEMAND FACTOR	DEMAND KVA
CONT. LOAD	0.00	125%	0.00
RECEPTACLE	0.00	100%/50%	0.00
MTRS/COOLS	0.00	100%	0.00
HEATS	0.00	100%	0.00
WATER HEATER	0.00	100%	0.00
EQUIPMENT	0.00	100%	0.00
KITCHEN EQUIP	0.00	65%	0.00
WELDER	34.17	NEC 630.11	53.52
25% OF LARGEST HVAC/MOTOR			0.00
TOTAL DEMAND			53.52

100 A MINIMUM BUS SIZE
90 A MAIN CIRCUIT BREAKER
18 K MINIMUM AIC RATING

SURFACE MOUNTING
NEMA 1 ENCLOSURE
GROUND BAR

NOTES
1. SEE SPECIFICATIONS
2. PROVIDE WITH GFI BREAKER
3.
4.
5.

CONNECTED LOADS	
PHASE A:	11.4 KVA
PHASE B:	11.4 KVA
PHASE C:	11.4 KVA
TOTAL:	34.2 KVA
DEMAND	64 AMP

PANEL B

120/208V, 3 PHASE, 4 WIRE

CKT	DESCRIPTION	KVA	C	G	W	CB	CKT	CKT	CB	W	G	C	KVA	DESCRIPTION	CKT
1	REC OPEN SHOP	1.1	1/2	12	12	20	1	2	20	12	12	1/2	0.5	REC EXTERIOR	2
3	REC OPEN SHOP	1.1	1/2	12	12	20	3	4	20	12	12	1/2	1.0	REC OPEN SHOP	4
5	REC OPEN SHOP	1.1	1/2	12	12	20	5	6	20	12	12	1/2	0.6	LTS EXTEXTERIOR	6
7	REC OPEN SHOP	1.1	1/2	12	12	20	7	8	20	12	12	1/2	1.4	LTS OPEN SHOP 105-107,110	8
9	REC OPEN SHOP	1.1	1/2	12	12	20	9	10	20	12	12	1/2	1.1	LTS 102-104,108-111	10
11	REC DATA	0.5	1/2	12	12	20	11	12	20	12	12	1/2	1.0	OVERHEAD DOOR	12
13	REC DATA	0.5	1/2	12	12	20	13	14	20	12	12	1/2	0.7	EF-3	14
15	REC DATA	0.5	1/2	12	12	20	15	16	20	12	12	1/2	0.2	ACTUATOR	16
17	REC CORR	0.9	1/2	12	12	20	17	18	20				0.0	SPARE	18
19	REC BATH	0.4	1/2	12	12	20	19	20	20				0.0	SPARE	20
21	REC CLASSROOM	1.1	1/2	12	12	20	21	22	20				0.0	SPARE	22
23	REC CLASSROOM	0.9	1/2	12	12	20	23	24					0.0	SPACE ONLY	24
25	REC STUDY	0.7	1/2	12	12	20	25	26					0.0	SPACE ONLY	26
27	REC STUDY	0.7	1/2	12	12	20	27	28					0.0	SPACE ONLY	28
29	EWC NOTE 2	1.0	1/2	12	12	20	29	30					0.0	SPACE ONLY	30
31	SITE POLE LTS	0.2	1/2	12	12	20	31	32					0.0	SPACE ONLY	32
33	SPACE ONLY	0.0					33	34					0.0	SPACE ONLY	34
35	SPACE ONLY	0.0					35	36					0.0	SPACE ONLY	36
37	SPACE ONLY	0.0					37	38					0.0	SPACE ONLY	38
39	SPACE ONLY	0.0					39	40					0.0	SPACE ONLY	40
41	SPACE ONLY	0.0					41	42					0.0	SPACE ONLY	42

DESCRIPTION	CONNECTED KVA	DEMAND FACTOR	DEMAND KVA
CONT. LOAD	3.34	125%	4.18
RECEPTACLE	14.12	100%/50%	12.06
MTRS/COOLS	1.70	100%	1.70
HEATS	0.00	100%	0.00
WATER HEATER	0.00	100%	0.00
EQUIPMENT	0.20	100%	0.20
KITCHEN EQUIP.	0.00	65%	0.00
SPECIAL EQ.	0.00	100%	0.00
25% OF LARGEST HVAC/MOTOR			0.25
TOTAL DEMAND			18.38

100 A MINIMUM BUS SIZE
MAIN LUGS ONLY
10 K MINIMUM AIC RATING

SURFACE MOUNTING
NEMA 1 ENCLOSURE
GROUND BAR

NOTES
1. SEE SPECIFICATIONS
2. PROVIDE WITH GFI BREAKER
3.
4.
5.

CONNECTED LOADS	
PHASE A:	6.6 KVA
PHASE B:	6.8 KVA
PHASE C:	6 KVA
TOTAL:	19.4 KVA
DEMAND	51 AMP

24097

ATLANTEC
ENGINEERS, PA
now IMEG
3223 BLUE RIDGE ROAD, SUITE B3
RALEIGH, NC 27612
(919) 571-11
24097

SEAL
NORTH CAROLINA PROFESSIONAL SEAL
IMEG CONSULTANTS CORP.
No. F-1507

SEAL
NORTH CAROLINA PROFESSIONAL SEAL
058287
ENGINEER
ALEX B. BOWLING
1/3/2025

GENERAL NOTES

KEY PLAN

SCO# 23-2704401A

NO	REVISION	DATE

JKF ARCHITECTURE
625 LYNNDALE CT., SUITE F, GREENVILLE, NC 27858 252-355-1068

BEAUFORT COUNTY
COMMUNITY COLLEGE
INDUSTRIAL TRAINING CENTER
AURORA, NC

DRAWING TITLE
POWER RISER AND PANEL SCHEDULES

SCALE	NOT TO SCALE
DRAWN	AB
CHECKED	AB
DATE	01-06-2025
PROJECT NO.	2024-10
DRAWING NO	E3.1

SYMBOL LEGEND

	SMOKE DETECTOR, PHOTOELECTRIC ADDRESSABLE.	SEE SPECIFICATION
F	FIRE ALARM PULL STATION. MOUNT 42" A.F.F. ADDRESSABLE.	SEE SPECIFICATION
'XX'	FIRE ALARM STROBE/HORN. MOUNT 80" A.F.F., 75 dBA SOUND LEVEL. 'XX' INDICATES CANDELA RATING.	SEE SPECIFICATION
'XX'	FIRE ALARM CEILING STROBE/HORN. 75 dBA SOUND LEVEL. 'XX' INDICATES CANDELA RATING.	SEE SPECIFICATION
FACP	FIRE ALARM CONTROL PANEL, FLUSH MOUNTED. ADDRESSABLE.	SEE SPECIFICATION
'XX'	FIRE ALARM CEILING STROBE. 'XX' INDICATES CANDELA RATING.	SEE SPECIFICATION
FCELL	FIRE ALARM CELLULAR COMMUNICATOR WITH BATTERY BACKUP 2 PATH COMMUNICATIONS: CELLULAR AND IP (INTERNET) SURFACE MOUNTED.	SEE SPECIFICATION

FIRE ALARM RISER

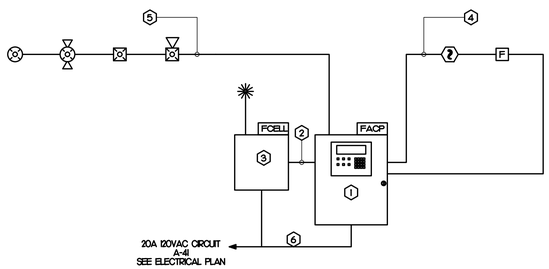

KEY NOTES

1. ADDRESSABLE FIRE ALARM CONTROL PANEL. PROVIDE ADDITIONAL NAC PANEL AS REQUIRED.
2. TRANSMISSION SIGNALS VIA CELLULAR SYSTEM IN CONDUIT.
3. CELLULAR DIGITAL ALARM COMMUNICATOR.
4. ADDRESSABLE CIRCUIT.
5. NOTIFICATION APPLIANCE CIRCUIT.
6. SURGE ARRESTOR(S) FOR CIRCUIT(S) INSTALLED NEXT TO ELECTRICAL PANEL. SEE DETAIL BELOW.

TRANSIENT ARRESTOR DETAIL

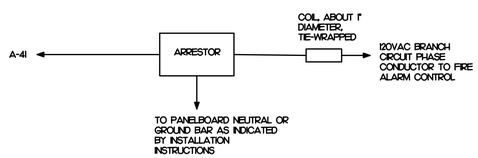

NOTES:

1. SECURELY MOUNT TRANSIENT ARRESTOR IN ACCESSIBLE JUNCTION BOX OR PROPER METAL ENCLOSURE ADJACENT TO THE PANELBOARD. PROVIDE ENGRAVED LABEL INDICATING ITS LOCATION

FIRE ALARM NOTES

1. SEE PLANS FOR QUANTITY AND LOCATION OF ALL EQUIPMENT.
2. CONTRACTOR SHALL PROVIDE COMPLETE DOCUMENT PER 2018 FIRE CODE SECTION 907.1.1 AND 907.1.2 TO TO ENGINEER FOR APPROVAL PRIOR TO SUBMIT TO AND TESTING BY TOWN OF WINTERVILLE FIRE MARSHAL'S OFFICE.
3. PLACARD THE ENTIRE FIRE ALARM SYSTEM. PROVIDE PANEL AND CIRCUIT NUMBERS ON A NAME PLATE AFFIXED TO THE FACE OF THE FIRE ALARM CONTROL PANEL.
4. CONTRACTOR SHALL PROVIDE ZONE MAPS COMPLETE WITH ADDRESSES FOR EACH FIRE ALARM DEVICE IN WOODEN FRAME ADJACENT TO THE NEW FIRE ALARM CONTROL PANEL.
5. FIRE ALARM CONTRACTOR SHALL PROVIDE BATTERY CALCULATIONS AND CUT SHEETS FOR FIRE ALARM SYSTEM TO ENGINEER FOR APPROVAL.
6. ALL WIRING SHALL BE SUPERVISED.
7. ALL WIRING SHALL BE PER MANUFACTURER'S SPECIFICATIONS.
8. ALL WIRING SHALL BE IN CONDUIT.
9. ADDRESSABLE SLC CIRCUIT REQUIREMENTS:
   - WIRING SHALL BE 'CLASS A'
   - SEE SPECIFICATION.
10. NOTIFICATION CIRCUIT REQUIREMENTS:
    - WIRING SHALL BE 'CLASS B'.
    - PROVIDE WITH 'SYNC MODULE' AS REQUIRED PER NFPA 72.
    - FURNISH NOTIFICATION CIRCUITS AS REQUIRED TO ACCOMMODATE CIRCUIT LOADING. NO NOTIFICATION CIRCUIT SHALL BE LOADED TO MORE THAN 80% CAPACITY.
11. NOTIFICATION APPLIANCE RATINGS:
    - PROVIDE SOUND (dB) AND CANDELA (Cd) RATINGS FOR ALL HORN/STROBE DEVICES PER NFPA 72. ALL VISIBLE NOTIFICATION APPLIANCES SHALL BE SYNCHRONIZED PER NFPA 72, 18.5.5.5.7 AND 18.5.3.6.
    - A DECIBEL LEVEL OF 15 dB ABOVE AMBIENT ON NFPA 72, TABLE A.18.4.3) SHALL BE MAINTAINED IN ALL GENERAL AREAS AND 10.0 dB (15 dB ABOVE AN AMBIENT OF 85 dB IN NFPA 72, 18.4.3.1) SHALL BE MAINTAINED IN ALL MECHANICAL EQUIPMENT ROOMS PER NFPA 72 AND THE 2018 NORTH CAROLINA STATE BUILDING CODE (SECTION 907.6.2).
13. DIGITAL ALARM COMMUNICATOR:
    - FIRE ALARM SYSTEM SHALL BE WITH DIGITAL ALARM COMMUNICATOR (DACT).
    - DACT SHALL HAVE CAPABILITY TO HANDLE 2 PHONE LINES.
    - WHERE DUAL COMMUNICATION PATHS OF CELLULAR NETWORK AND INTERNET NETWORK ARE REQUIRED BY THE LOCAL FIRE MARSHAL, PROVIDE WITH COMMUNICATOR IN LIEU OF 2 LINE TELEPHONE.
    - FIELD COORDINATE WITH OWNER TO TYPE MATCH MONITORING COMPANY.

FIRE ALARM DEVICE INSTALLATION DETAIL

NOT TO SCALE

NFPA 72 AND ADA DEVICE INSTALLATION REQUIREMENTS

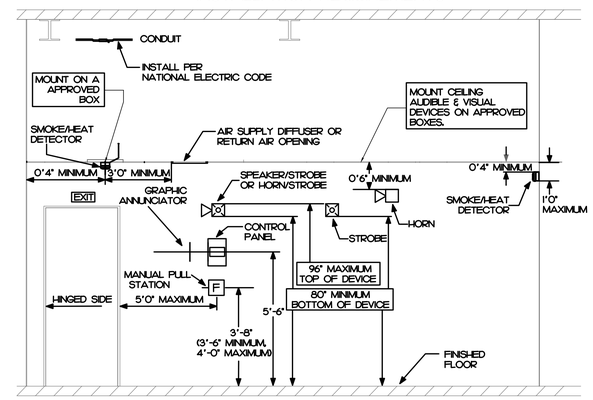

FIRE ALARM SYSTEM INPUT/OUTPUT MATRIX

SYSTEM OUTPUTS

	SYSTEM INPUTS	A	B	C	D	E	F	G	H	I	J	K	L	M	N	O	P	Q	R	S	T	U	V	W	X	Y	
		FACP ANNUNCIATION						NOTIFICATION						REQUIRED FIRE SAFETY CONTROL													
		ACTUATE COMMON ALARM SIGNAL INDICATOR	ACTUATE AUDIBLE ALARM SIGNAL	ACTUATE COMMON SUPERVISORY SIGNAL INDICATOR	ACTUATE AUDIBLE SUPERVISORY SIGNAL	ACTUATE COMMON TROUBLE SIGNAL INDICATOR	ACTUATE AUDIBLE TROUBLE SIGNAL	ACTUATE ZONE OR DEVICE ADDRESS ALARM INDICATOR	ACTUATE GENERAL EVACUATION SIGNAL	DISPLAY CHANGE OF STATUS	TRANSMIT FIRE ALARM SIGNAL TO CENTRAL STATION	TRANSMIT SUPERVISORY SIGNAL TO CENTRAL STATION	TRANSMIT TROUBLE SIGNAL TO CENTRAL STATION	DELAYED TROUBLE SIGNAL TO CENTRAL STATION													
1	FIRE ALARM SYSTEM AC POWER FAILURE					●	●							●													1
2	FIRE ALARM SYSTEM LOW BATTERY					●	●						●														2
3	OPEN CIRCUIT					●	●						●														3
4	GROUND FAULT					●	●						●														4
5	NOTIFICATION APPLIANCE CIRCUIT SHORT					●	●						●														5
6	BUILDING MANUAL PULL STATIONS	●	●					●	●	●	●																6
7	CORRIDOR SMOKE DETECTORS	●	●					●	●	●	●																7
8	AREA SMOKE DETECTORS	●	●					●	●	●	●																8
9																											9
10																											10
11																											11
12																											12
13																											13
14																											14
		A	B	C	D	E	F	G	H	I	J	K	L	M	N	O	P	Q	R	S	T	U	V	W	V	W	

NOTES

1. TROUBLE SIGNALS AND THEIR RESTORATION TO NORMAL SHALL BE INDICATED WITHIN 200 SECONDS.

ATLANTEC ENGINEERS, PA now IMEG
3223 BLUE RIDGE ROAD, SUITE B3
RALEIGH, NC 27612
(919) 571-111

24097

SEAL: IMEG CONSULTANTS CORP. No. F-1507 — NORTH CAROLINA PROFESSIONAL CORPORATION

SEAL: NORTH CAROLINA PROFESSIONAL SEAL 058287 ENGINEER ALEX R. BOWLING — 1/3/25

GENERAL NOTES

KEY PLAN

SCO# 23-2704401A

NO	REVISION	DATE

JKF ARCHITECTURE
625 LYNNDALE CT., SUITE F, GREENVILLE, NC 27858 252-355-1068

BEAUFORT COUNTY COMMUNITY COLLEGE INDUSTRIAL TRAINING CENTER
AURORA, NC

DRAWING TITLE: FIRE ALARM NOTES, LEGEND, DETAILS

SCALE	NOT TO SCALE
DRAWN	AB
CHECKED	AB
DATE	01-06-2025
PROJECT NO.	2024-10
DRAWING NO	FA0.1

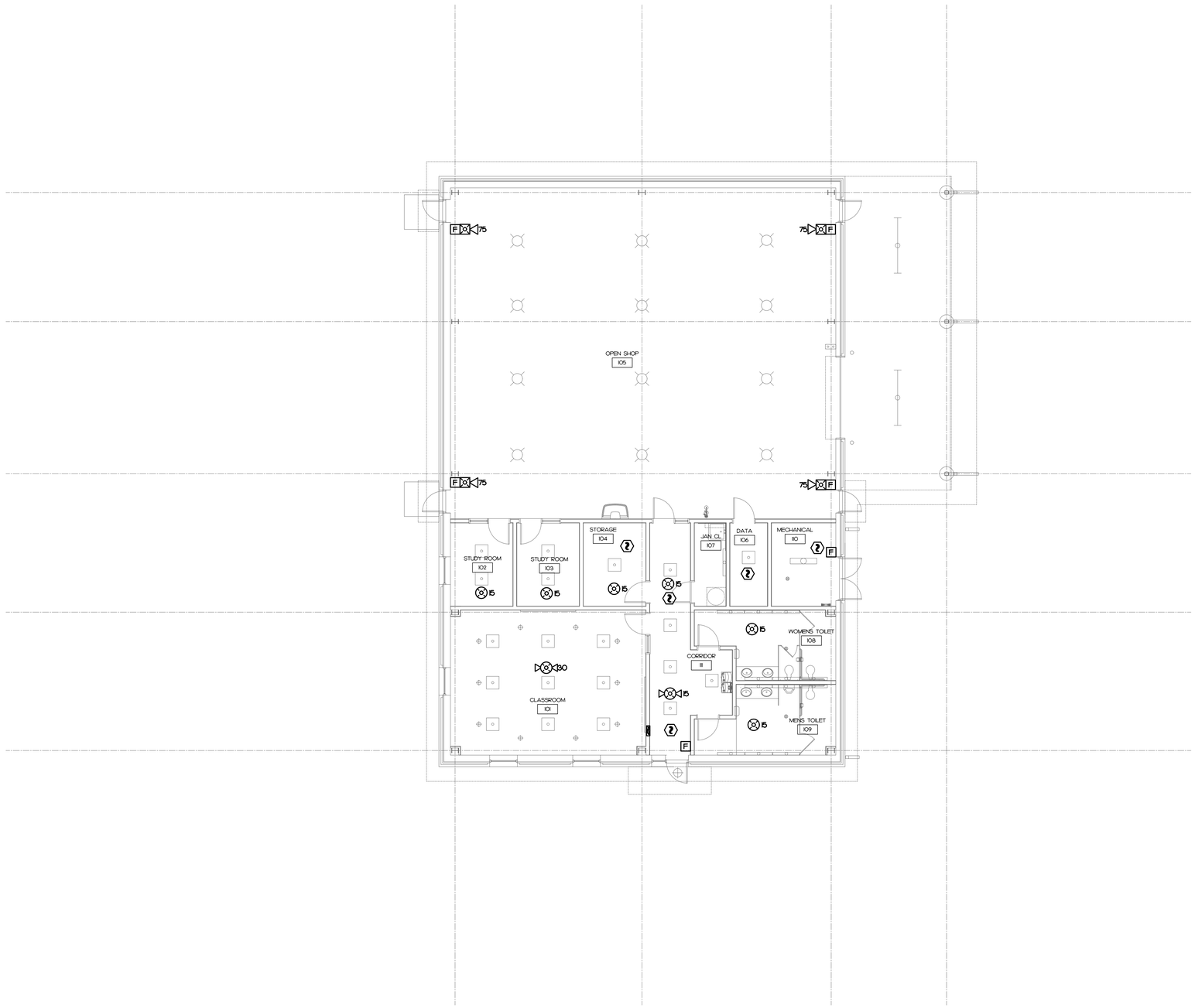

FIRE ALARM PLAN

SCALE: 1/8" = 1'-0"

1

24097

ATLANTEC ENGINEERS, PA
now IMEG
3223 BLUE RIDGE ROAD, SUITE B3
RALEIGH, NC 27612
(919) 571-111
24097

SEAL
NORTH CAROLINA PROFESSIONAL CORPORATION
IMEG CONSULTANTS CORP.
No. F-1507

SEAL
NORTH CAROLINA PROFESSIONAL ENGINEER
SEAL 058287
ALEX R. BOWLING
1/24/25

GENERAL NOTES

KEY PLAN

SCO# 23-2704401A

NO	REVISION	DATE

JKF ARCHITECTURE

625 LYNNDALE CT., SUITE F, GREENVILLE, NC 27858 252-353-1068

BEAUFORT COUNTY
COMMUNITY COLLEGE
INDUSTRIAL TRAINING CENTER
AURORA, NC

DRAWING TITLE
FIRE ALARM PLAN

SCALE	1/8" = 1'-0"
DRAWN	AB
CHECKED	AB
DATE	01-06-2025
PROJECT NO.	2024-10
DRAWING NO	FA1.1