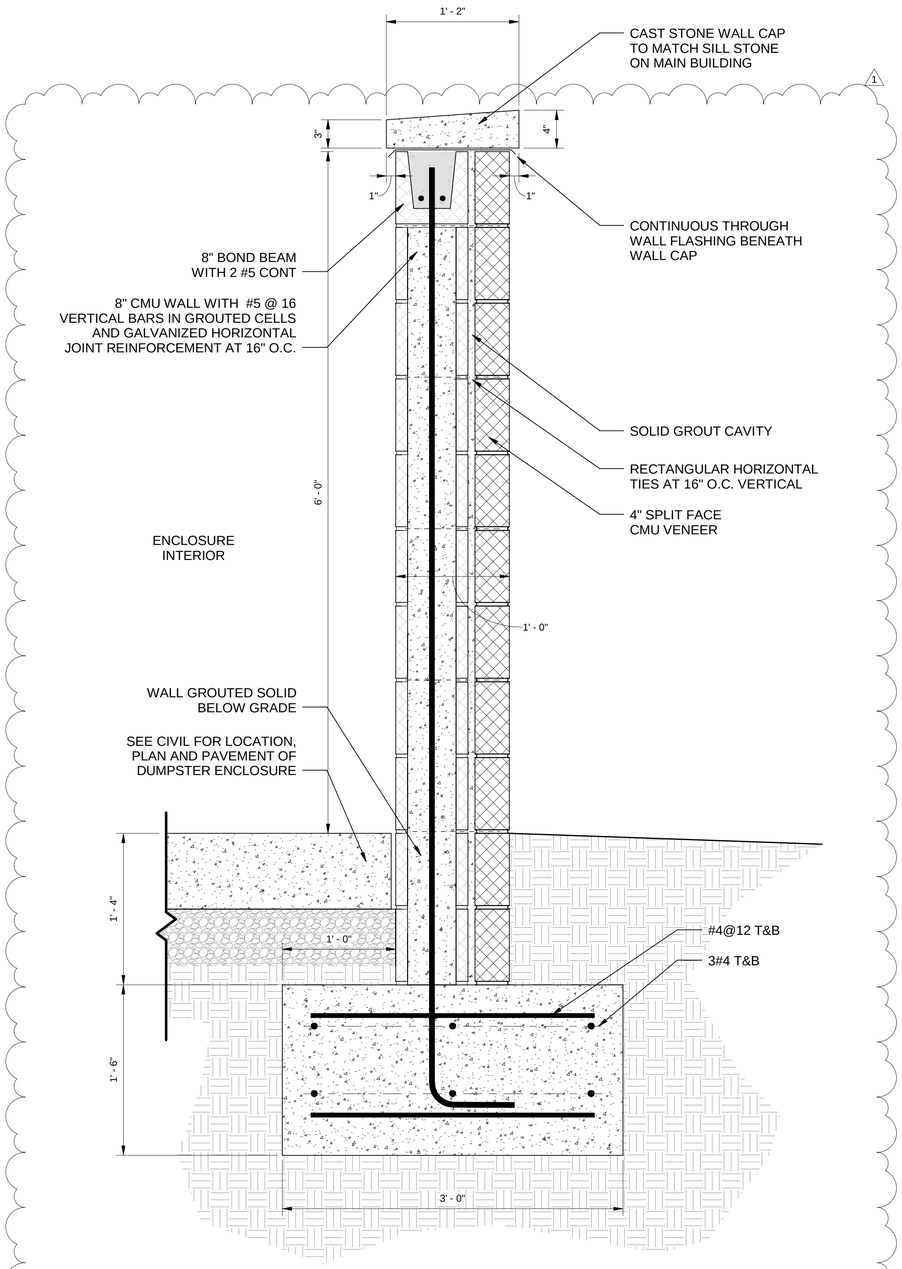

A1 DUMPSTER ENCLOSURE - SECTION
1 1/2" = 1'-0"

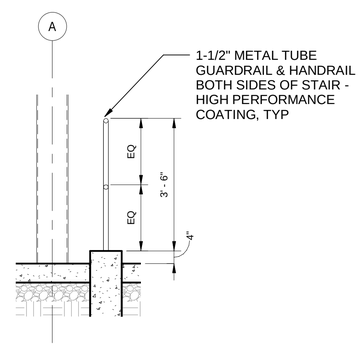

A5 LOADING DOCK GUARDRAIL DETAIL
1/2" = 1'-0"

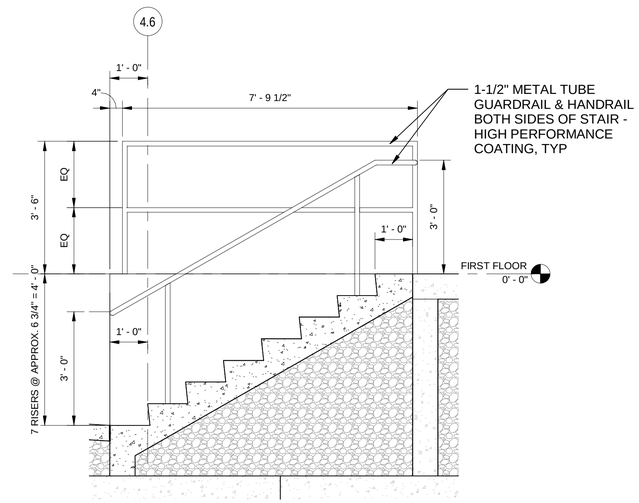

D8 SECTION - STAIR
1/2" = 1'-0"

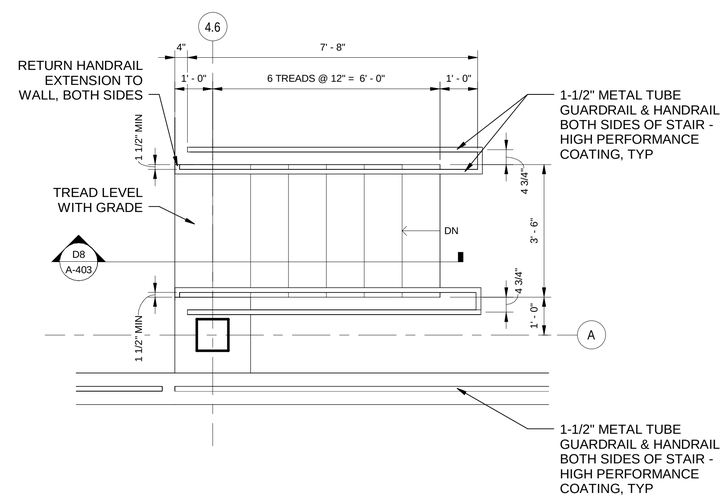

A8 ENLARGED PLAN - STAIR
1/2" = 1'-0"

US Army Corps of Engineers ®

MARK	DESCRIPTION	DATE
1	Amendment 0003	08/31/23

ISSUE DATE: AUGUST 2023
SOLICITATION NO.: W912PM23R0002
CONTRACT NO.: W912PM-19-D-0004
FIRST TITLE
SECOND TITLE

DESIGNED BY: BTF
DRAWN BY: BTF
CHECKED BY: EBS
SUBMITTED BY:
SIZE: ANSI D

US ARMY CORPS OF ENGINEERS
WILMINGTON DISTRICT
69 DARLINGTON AVENUE
WILMINGTON, NORTH CAROLINA 28403-1343

WHITMAN, REQUARDT & ASSOCIATES, LLP
801 SOUTH CAROLINE STREET
BALTIMORE, MARYLAND 21231

FORT LIBERTY, NORTH CAROLINA
SOF SUPPLY SUPPORT ACTIVITY
PROJECT 87447
ENLARGED STAIR PLANS, ELEVATIONS & DETAILS

SHEET ID
A-403

READY TO ADVERTISE