copyright 2022 Hite associates

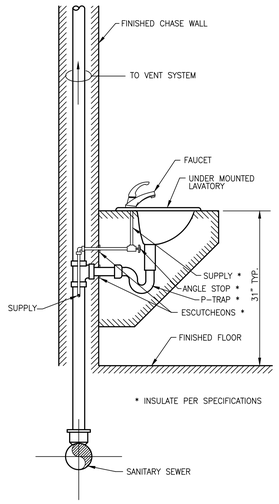

COUNTER SINK
SCALE: NTS

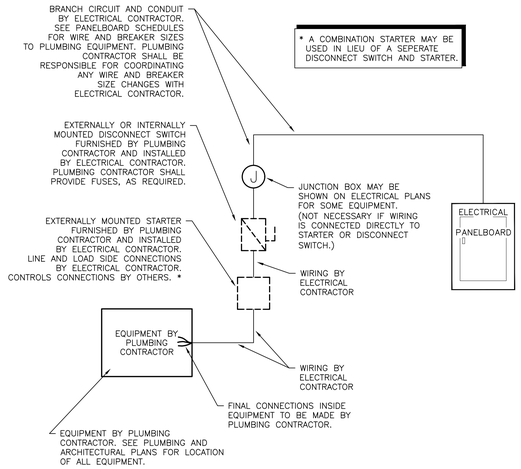

PLUMBING EQUIPMENT ELECTRICAL CONNECTION DETAIL
SCALE: N.T.S.

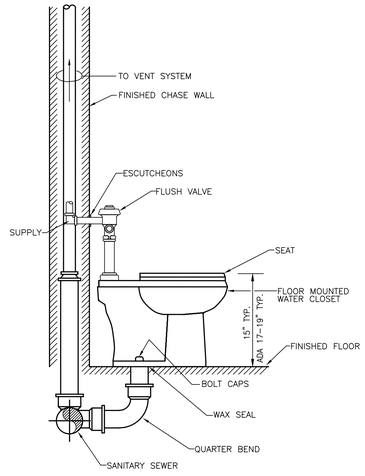

WATER CLOSET
SCALE: N.T.S.

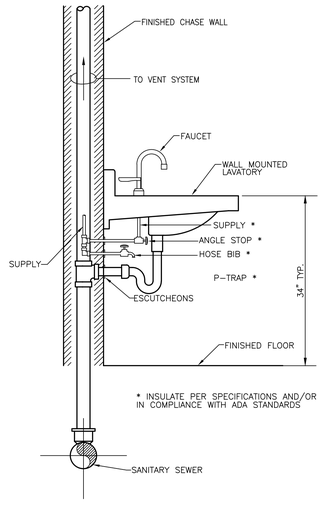

LAVATORY - WALL MOUNTED
SCALE: N.T.S.

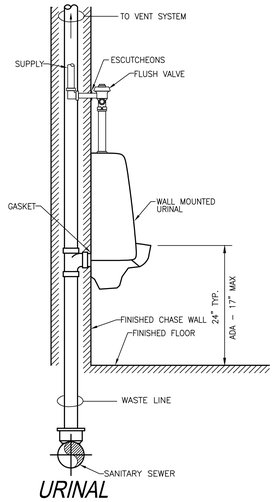

URINAL
SCALE: N.T.S.

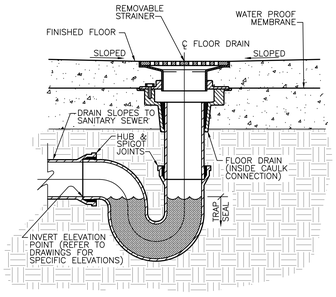

FLOOR DRAIN
SCALE: N.T.S.

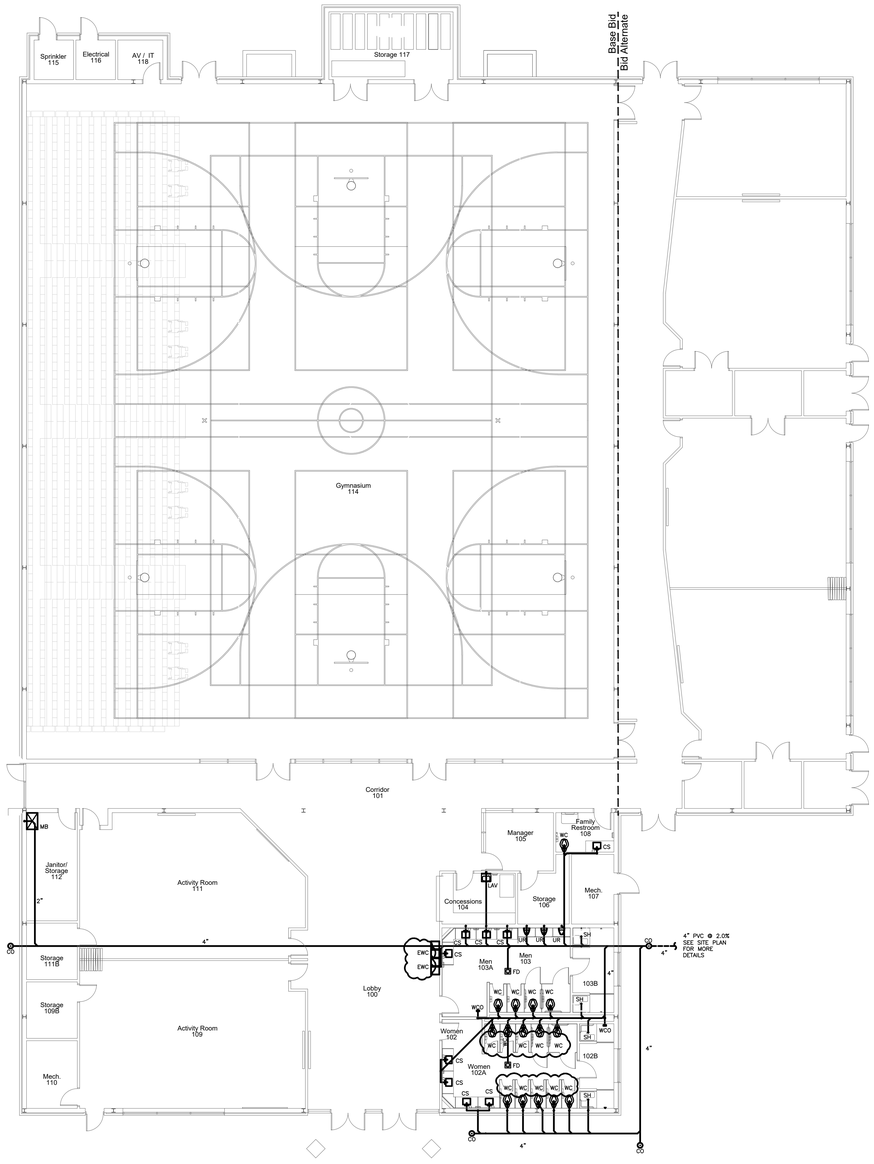

SANITARY SEWER PLAN
SCALE: 3/32" = 1'-0"

ES Project No: ES23051
ENGINEERING SOURCE of NC, P.A.
102-A2 Regency Blvd. Greenville, NC 27834
E-Mail Address: generalmail@engrsource.com
Web (252) 439-0338 • Fax (252) 439-0462 • Fax (c-107)

8/31/23

No.	Date	Revision
1	8/31/23	PRE-BID MTG & ADDENDUM #1

Hite associates
ARCHITECTURE / PLANNING / TECHNOLOGY
2600 Meridian Drive / Greenville, NC 27834 / tel (252) 757-0333

HITE ASSOCIATES, P.C. ARCHITECTURAL CORPORATION 418 GREENVILLE, NORTH CAROLINA

COMMUNITY CENTER AND GYMNASIUM FOR
Pitt County Office Park
403 Government Circle, Greenville, NC 27834

Project No. 22207
Date: July 2023
Drawing no. P 101

THIS DRAWING IS THE PROPERTY OF ENGINEERING SOURCE of NC, P.A. THIS DRAWING IS NOT TO BE COPIED IN WHOLE OR IN PART. THIS DRAWING OR THE INFORMATION HEREUPON IS NOT TO BE USED ON ANY OTHER PROJECT AND MUST BE RETURNED TO ENGINEERING SOURCE of NC, P.A. UPON REQUEST. DO NOT SCALE THESE DRAWINGS. REFER TO ARCHITECTURAL DRAWINGS FOR EXACT DIMENSIONS.