NORTH CAROLINA STATE UNIVERSITY
COLLEGE OF VETERINARY MEDICINE
TRANSLATIONAL RESEARCH FACILITY

Raleigh, North Carolina

CONSTRUCTION DOCUMENTS - ISSUED FOR CONSTRUCTION

WAGNER Project Number 202207

Issue Date 05/18/2023

NCSU Project Number Code: 42124 Item: 305

SCO ID#21-24030-01A

ARCHITECTURE
Wagner Architecture, pllc
92 Elam Court
New Hill, NC 27562
Phone: 919.612.5050
wagner@wagnerarch.com

MECHANICAL, ELECTRICAL, PLUMBING ENGINEERING
Kramer Engineering Services, pllc
5517 Cascade Drive
Chapel Hill, NC 27514
Phone: 919.933.3350
donna@kespllc.com

STRUCTURAL ENGINEERING
Bennett & Pless
5430 Wade Park Boulevard, Suite 400
Raleigh, NC 27607
Phone: 919.832.5587
WWW.LHCengineers.com

CIVIL ENGINEERING
NV5 Engineers and Consultants, Inc.
3300 REGENCY PARKWAY, STE 100
CARY, NC 27518
Phone: 919.851.1912
WWW.NV5.com

Drawing Index:

GENERAL:

G001	BUILDING CODE SUMMARY
G002	LIFE SAFETY PLAN

CIVIL:

C001	EXISTING CONDITIONS
C100	DEMOLITION PLAN
C200	SITE PLAN
C201	SITE PLAN ENLARGEMENT
C202	PROPERTY EXHIBIT
C300	UTILITY PLAN
C301	SEWER PROFILE
C302	SEWER PROFILE
C303	WATER PROFILE
C303A	WATER PROFILE ALTERNATE 08
C400	GRADING AND DRAINAGE PLAN
C401	STORM DRAIN PROFILE
C402	EROSION CONTROL PLAN
C500	NPDES STABILIZATION PLAN
C501	NPDES STABILIZATION SPECIFICATIONS
D100	UTILITY DETAILS
D101	UTILITY DETAILS
D102	UTILITY DETAILS
D103	UTILITY DETAILS
D104	EROSION DETAILS
D105	EROSION DETAILS
D106	STORMWATER DETAILS

STRUCTURAL:

S001	GENERAL NOTES
S002	ROOF LOADING ATTACHMENT DIAGRAMS
S100	FOUNDATION PLAN
S101	MECHANICAL PLATFORM FRAMING PLAN
S102	ROOF FRAMING PLAN
S200	FOUNDATION DETAILS
S201	FOUNDATION DETAILS
S300	TYP CMU WALL DETAILS
S400	FRAMING DETAILS
S401	FRAMING DETAILS

ARCHITECTURE:

A000	ABBREVIATIONS, LEGENDS AND SYMBOLS
A001	ARCHITECTURAL SITE PLAN
A110	FLOOR PLAN & DOOR SCHEDULE
A120	REFLECTED CEILING PLANS & ROOF PLAN
A121	ENLARGED REFLECTED CEILING PLAN (MAIN FLOOR) - DIMENSIONS
A130	FINISH PLAN & SCHEDULE
A200	BUILDING ELEVATIONS
A300	BUILDING SECTIONS
A400	LABORATORY ABBREVIATIONS, SYMBOLS & SCHEDULES
A410	LABORATORY PLANS
A420	WALL SECTIONS
A421	WALL SECTIONS
A422	DETAILS
A500	PARTITION TYPES AND CEILING DETAILS

PLUMBING:

P001	PLUMBING LEGEND
P101	WASTE AND VENT PIPING PLAN
P201	WATER AND MEDICAL GAS PIPING PLAN
P202	EQUIPMENT PLATFORM - WATER AND MEDICAL GAS PIPING PLAN
P301	PLUMBING SCHEDULES
P401	PLUMBING DETAILS
P402	PLUMBING DETAILS

MECHANICAL:

M001	MECHANICAL LEGEND
M010	MECHANICAL UTILITIES - SITE DEMOLITION PLAN AND SITE UTILITY NOTES
M015	STEAM SERVICE - SITE PLAN
M020	CHILLED WATER SERVICE - SITE PLAN
M021	SITE CHILLED WATER FLOW DIAGRAM
M101	FLOOR PLAN - MECHANICAL EQUIPMENT AND DUCTWORK
M102	EQUIPMENT PLATFORM - MECHANICAL DUCTWORK AND EQUIPMENT
M201	FLOOR PLAN - MECHANICAL PIPING AND CONTROLS
M202	EQUIPMENT PLATFORM - MECHANICAL PIPING AND CONTROLS
M401	MECHANICAL SCHEDULES
M501	MECHANICAL DETAILS
M502	MECHANICAL DETAILS
M503	MECHANICAL DETAILS
M601	HVAC CONTROLS LEGEND
M602	HVAC CONTROLS - AIR VALVES WITH HOT WATER REHEAT
M603	HVAC CONTROLS - EXHAUST SYSTEMS
M604	HVAC CONTROLS - FAN COIL UNITS
M605	HVAC CONTROLS - AIR HANDLING UNIT
M606	HVAC CONTROLS - HEATING HOT WATER CONTROLS
M607	HVAC CONTROLS - CHILLED WATER PUMP AND BYPASS
M608	HVAC CONTROLS - SEQUENCES OF CONTROL AND MISCELLANEOUS MONITORING

ELECTRICAL:

ES 101	ELECTRICAL SITE PLAN - DEMOLITION
ES 102	ELECTRICAL SITE PLAN - RENOVATION
E001	ELECTRICAL LEGEND
E002	NOTES, SCHEDULES
E201	FLOOR PLAN - LIGHTING
E202	FLOOR PLAN - POWER, TELECOM
E203	FLOOR PLAN - FIRE ALARM, BUILDING SECTION - ELECTRICAL SYSTEMS
E204	FLOOR PLAN - SECURITY, TELEMETRY
E205	EQUIPMENT PLATFORM - LIGHTING, POWER/TELECOM AND TELEMETRY, AND FIRE ALARM, FLOOR PLAN - ELECTRICAL SYSTEMS
E301	RISERS
E302	RISERS
E303	RISERS
E304	RISERS
E401	PANEL SCHEDULES, DETAILS
E402	DETAILS
E403	DETAILS
E404	DETAILS
E405	DETAILS
E406	DETAILS
E407	DETAILS

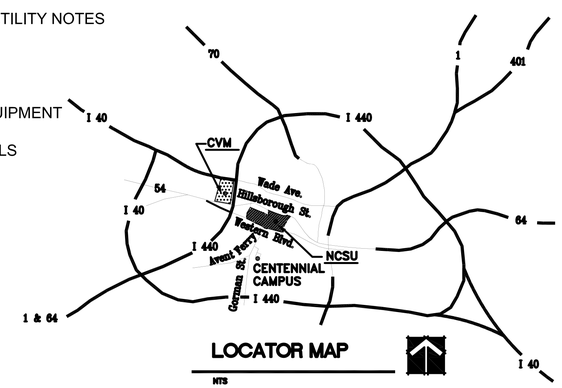

LOCATOR MAP

NTS

BUILDING REFERENCE PLAN

NTS

Stamps & Approvals

NORTH CAROLINA STATE UNIVERSITY – CVM

RALEIGH, NORTH CAROLINA

TRANSLATIONAL RESEARCH FACILITY

2018 APPENDIX B
BUILDING CODE SUMMARY
FOR ALL COMMERCIAL PROJECTS
(except 1 and 2-family dwellings and townhouses)
(Reproduce the following data on the building plans sheet 1 or 2)

Name of Project: Translational Research Facility
Address: 4710 Terry Curtin Drive, Raleigh, NC, 27607 Zip Code 27606
Proposed Use: Vivarium
Owner/Authorized Agent: Laura Zaytoun, RA Phone # (919) 515-8049 E-Mail lzaytou@ncsu.edu
Owned By: ☐ City/County ☐ Private ☒ State
Code Enforcement Jurisdiction: ☐ City_____ ☐ County_____ ☒ State

CONTACT: Kim Wagner, RA, LEED AP; Wagner Architecture, PLLC

Designer	Firm	Name	License #	Telephone #	E-mail
Architectural	Wagner Architecture, PLLC	Kim Wagner	10244	919-612-0050	kwagner@wagnerarch.com
Civil	NV5	Michael Allen	22514	919-858-1888	MichaelAllen@nv5.com
Electrical	Kramer Engineering Services, PLLC	Donna Kramer	14917	919-933-3350	donna@kespllc.com
Fire Alarm	Kramer Engineering Services, PLLC	Donna Kramer	14917	919-933-3350	donna@kespllc.com
Plumbing	Kramer Engineering Services, PLLC	Donna Kramer	14917	919-933-3350	donna@kespllc.com
Mechanical	Kramer Engineering Services, PLLC	Donna Kramer	14917	919-933-3350	donna@kespllc.com
Sprinkler-Standpipe	N/A				
Structural	LHC Structural Engineers	Rob Stevenson	028237	919-832-5587	rstevenson@lhcengineers.com
Retaining Walls >5' High	N/A				
Other					

2018 NC BUILDING CODE: ☒ New Construction ☐ Addition ☐ Renovation
☐ 1st Time Interior Completion
☐ Shell/Core - Contact the local inspection jurisdiction for possible additional procedures and requirements
☐ Phased Construction - Contact the local inspection jurisdiction for possible additional procedures and requirements

2018 NC EXISTING BUILDING CODE: EXISTING: ☐ Prescriptive ☐ Repair ☐ Chapter 14
Alteration: ☐ Level I ☐ Level II ☐ Level III ☐ Historic Property ☐ Change of Use

CONSTRUCTED: (date)_____ CURRENT OCCUPANCY(S) (Ch.3): _____
RENOVATED: (date)_____ PROPOSED OCCUPANCY(S) (Ch.3): _____
RISK CATEGORY (Table 1604.5); Current: ☐ I ☐ II ☐ III ☐ IV
Proposed: ☐ I ☒ II ☐ III ☐ IV

BASIC BUILDING DATA
Construction Type: (check all that apply) ☐ I-A ☐ I-B ☐ II-A ☐ II-B ☐ III-A ☐ III-B ☐ IV ☐ V-A ☒ V-B
Sprinklers: ☒ No ☐ Partial ☐ Yes ☐ NFPA 13 ☐ NFPA 13R ☐ NFPA 13D
Standpipes: ☒ No ☐ Yes Class ☐ I ☐ II ☐ III ☐ Wet ☐ Dry
Fire District: ☒ No ☐ Yes Flood Hazard Area: ☒ No ☐ Yes
Special Inspections Required: ☒ No ☐ Yes (Contact the local inspection jurisdiction for additional procedures and requirements.)

GROSS BUILDING AREA TABLE

FLOOR	EXISTING (SQ. FT.)	NEW (SQ. FT.)	SUB-TOTAL
8th Floor			
7th Floor			
6th Floor			
5th Floor			
4th Floor			
3rd Floor			
2nd Floor			
1st Floor	3610 SF		
Basement			
Sub-Basement			
TOTAL			

ALLOWABLE AREA

Primary Occupancy Classification(s):
Assembly ☐ A-1 ☐ A-2 ☐ A-3 ☐ A-4 ☐ A-5
Business ☒
Educational ☐
Factory ☐ F-1 Moderate ☐ F-2 Low
Hazardous ☐ H-1 Detonate ☐ H-2 Deflagrate ☐ H-3 Combust ☐ H-4 Health ☐ H-5 HPM
Institutional ☐ I-1 Condition ☐ 1 ☐ 2
☐ I-2 Condition ☐ 1 ☐ 2
☐ I-3 Condition ☐ 1 ☐ 2 ☐ 3 ☐ 4 ☐ 5
☐ I-4
Mercantile ☐
Residential ☐ R-1 ☐ R-2 ☐ R-3 ☐ R-4
Storage ☐ S-1 Moderate ☐ S-2 Low ☐ High-piled
☐ Parking Garage ☐ Open ☐ Enclosed ☐ Repair Garage
Utility and Miscellaneous ☐

Accessory Occupancy Classification(s): _____
Incidental Uses (Table 509): _____
Special Uses (Chapter 4 - List Code Sections): _____
Special Provisions: (Chapter 5 - List Code Sections): _____

Mixed Occupancy: ☒ No ☐ Yes Separation: _____Hr. Exception: _____

☐ Non-Separated Use (508.3) - The required type of construction for the building shall be determined by applying the height and area limitations for each of the applicable occupancies to the entire building. The most restrictive type of construction, so determined, shall apply to the entire building.

☐ Separated Use (508.4) - See below for area calculations for each story, the area of the occupancy shall be such that the sum of the ratios of the actual floor area of each use divided by the allowable floor area for each use shall not exceed 1.

$$\frac{\text{Actual Area of Occupancy A}}{\text{Allowable Area of Occupancy A}} + \frac{\text{Actual Area of Occupancy B}}{\text{Allowable Area of Occupancy B}} \leq 1$$

$$\frac{\quad}{\quad} + \frac{\quad}{\quad} + \ldots\ldots = \_\_\_\_ \leq 1.00$$

STORY NO.	DESCRIPTION AND USE	(A) BLDG AREA PER STORY (ACTUAL)	(B) TABLE 506.2[4] AREA	(C) AREA FOR FRONTAGE INCREASE [1,5]	(D) ALLOWABLE AREA PER STORY OR UNLIMITED [2,3]
1	B	3610 SF	9000 SF	N/A	9000 SF

[1] Frontage area increases from Section 506.3 are computed thus:
a. Perimeter which fronts a public way or open space having 20 feet minimum width = _____ (F)
b. Total Building Perimeter = _____ (P)
c. Ratio (F/P) = _____ (F/P)
d. W = Minimum width of public way = _____ (W)
e. Percent of frontage increase I_f = 100 [F/P - 0.25] x W/30 = _____ (%)
[2] Unlimited area applicable under conditions of Section 507.
[3] Maximum Building Area = total number of stories in the building x D (maximum 3 stories) (506.2).
[4] The maximum area of open parking garages must comply with Table 406.5.4.
[5] Frontage increase is based on the unsprinklered area value in Table 506.2.

ALLOWABLE HEIGHT

	ALLOWABLE	SHOWN ON PLANS	CODE REFERENCE [1]
Building Height in Feet (Table 504.3) [2]	40 FEET	23 FEET	
Building Height In Stories (Table 504.4) [3]	2 STORIES	1 STORY	

[1] Provide code reference if the "Shown on Plans" quantity is not based on Table 504.3 or 504.4.
[2] The maximum height of air traffic control towers must comply with Table 412.3.1.
[3] The maximum height of open parking garages must comply with Table 406.5.4.

FIRE PROTECTION REQUIREMENTS

BUILDING ELEMENT	FIRE SEPARATION DISTANCE (FEET)	RATING REQ'D	RATING PROVIDED (W/ _____ * REDUCTION)	DETAIL # AND SHEET #	DESIGN # FOR RATED ASSEMBLY	DESIGN # FOR RATED PENETRATION	DESIGN # FOR RATED JOINTS
Structural Frame, including columns, girders, trusses		0					
Bearing Walls							
Exterior		0					
North		0					
East		0					
West		0					
South		0					
Interior		0					
Nonbearing Walls and Partitions Exterior Walls		0					
North		0					
East		0					
West		0					
South		0					
Interior walls & partitions		0					
Floor Construction including supporting beams and joists		0					
Floor Ceiling Assembly		0					
Columns Supporting Floors		N/A					
Roof Construction including supporting beams and joists		0					
Roof Ceiling Assembly		0					
Columns Supporting Roof		N/A					
Shaft Enclosures - Exit		N/A					
Shaft Enclosures - Other		N/A					
Corridor Separation		N/A					
Occupancy/ Fire Barrier Separation		N/A					
Party/Fire Wall Separation		N/A					
Smoke Barrier Separation		N/A					
Smoke Partition		N/A					
Tenant/Dwelling Unit/Sleeping Unit Separation		N/A					
Incidental Use Separation		N/A					

* Indicate section number permitting reduction

PERCENTAGE OF WALL OPENING CALCULATIONS

FIRE SEPARATION DISTANCE (FEET) FROM PROPERTY LINES	DEGREE OF OPENINGS PROTECTION (TABLE 705.8)	ALLOWABLE AREA (%)	ACTUAL SHOWN ON PLANS (%)

LIFE SAFETY SYSTEM REQUIREMENTS

Emergency Lighting:	☐ No	☒ Yes
Exit Signs:	☐ No	☒ Yes
Fire Alarm:	☐ No	☒ Yes
Smoke Detection Systems:	☐ No	☒ Yes ☐ Partial _____
Carbon Monoxide Detection	☐ No	☒ Yes

LIFE SAFETY PLAN REQUIREMENTS

Life Safety Plan Sheet #: G002

☒ Fire and/or smoke rated wall locations (Chapter 7)
☐ Assumed and real property line locations (if not on the site plan)
☐ Exterior wall opening area with respect to distance to assumed property lines (705.8)
☒ Occupancy use for each area as it relates to occupant load calculation (Table 1004.1.2)
☒ Occupant loads for each area
☒ Exit access travel distances (1017)
☒ Common path of travel distances (Tables 1006.2.1 & 1006.3.2 (1))
☐ Dead end lengths (1020.4)
☒ Clear exit widths for each exit door
☒ Maximum calculated occupant load capacity each exit door can accommodate based on egress width (1005.3)
☒ Actual occupant load for each exit door
☐ A separate schematic plan indicating where fire rated floor/ceiling and/or roof structures is provided for purposes of occupancy separation
☒ Location of doors with panic hardware (1010.1.10)
☐ Location of doors with delayed egress locks and the amount of delay (1010.1.9.7)
☐ Location of doors with electromagnetic egress locks (1010.1.9.9)
☐ Location of doors equipped with hold-open devices
☐ Location of emergency escape windows (1030)
☐ The square footage of each fire area (202)
☐ The square footage of each smoke compartment for Occupancy Classification I-2 (407.5)
☐ Note any code exceptions or table notes that may have been utilized regarding the items above

ACCESSIBLE DWELLING UNITS
(SECTION 1107)
N/A

TOTAL UNITS	ACCESSIBLE UNITS REQUIRED	ACCESSIBLE UNITS PROVIDED	TYPE A UNITS REQUIRED	TYPE A UNITS PROVIDED	TYPE B UNITS REQUIRED	TYPE B UNITS PROVIDED	TOTAL ACCESSIBLE UNITS PROVIDED

ACCESSIBLE PARKING
(SECTION 1106)
N/A

LOT OR PARKING AREA	TOTAL # OF PARKING SPACES		# OF ACCESSIBLE SPACES PROVIDED			TOTAL # ACCESSIBLE PROVIDED
	REQUIRED	PROVIDED	REGULAR WITH 5' ACCESS AISLE	VAN SPACES WITH 132" ACCESS AISLE	VAN SPACES WITH 8' ACCESS AISLE	
TOTAL						

PLUMBING FIXTURE REQUIREMENTS
(TABLE 2902.1)

	USE	WATERCLOSETS			URINALS	LAVATORIES			SHOWERS/ TUBS	DRINKING FOUNTAINS	
		MALE	FEMALE	UNISEX		MALE	FEMALE	UNISEX		REGULAR	ACCESSIBLE
SPACE	EXISTING										
	NEW			1				1	0	0	0
	REQUIRED			1*				1*	0	0**	0**

*Separate facilities not required per NCBC Plumbing Code Section 403.2 (less than 30 occupants)
**Drinking fountain not required per NCBC Plumbing Code Section 410.2 (small occupancies)

SPECIAL APPROVALS

Special approval: (Local Jurisdiction, Department of Insurance, OSC, DPI, DHHS, etc., describe below)

ENERGY SUMMARY

ENERGY REQUIREMENTS:
The following data shall be considered minimum and any special attribute required to meet the energy code shall also be provided.
Each Designer shall furnish the required portions of the project information for the plan data sheet.
If performance method, state the annual energy cost for the standard reference design vs annual energy cost for the proposed design.

Existing building envelope complies with code: ☐ No ☐ Yes (The remainder of this section is not applicable)
Exempt Building: ☒ No ☐ Yes (Provide code or statutory reference): _____
Climate Zone: ☐ 3A ☒ 4A ☐ 5A
Method of Compliance: Energy Code ☐ Performance ☒ Prescriptive
ASHRAE 90.1 ☐ Performance ☒ Prescriptive
(If "other" specify source here) _____

THERMAL ENVELOPE (Prescriptive method only)
Roof/ceiling Assembly (each assembly)
Description of assembly: Standing seam metal panel roofing over polyisocyanurate insulation over vapor barrier, over 1/2" coverboard, over corrugated metal decking.
U-Value of total assembly: 0.033
R-Value of Insulation: R-30 Continuous
Skylights in each assembly: N/A
U-Value of skylight: N/A
total square footage of skylights in each assembly: N/A

Exterior Walls (each assembly)
Description of assembly: Masonry Cavity Wall: 8" CMU inner wythe, 2" rigid extruded polystyrene insulation, 2" air gap, 4" brick wythe.
U-Value of total assembly: 0.10
R-Value of Insulation: R-10 continuous
Openings (windows or doors with glazing)
U-Value of assembly:
Solar heat gain coefficient:
projection factor:
Door R-Values:

Walls below grade (each assembly)
Description of assembly: N/A
U-Value of total assembly:
R-Value of Insulation:

Floors over unconditioned space (each assembly)
Description of assembly: N/A
U-Value of total assembly:
R-Value of insulation:

Floors slab on grade
Description of assembly: Rigid insulation below slab for 24" around perimeter
U-Value of total assembly: 0.066
R-Value of Insulation: R-15 continuous
Horizontal/vertical requirement: 24" horizontally; vertically to bottom of footing
slab heated: N/A

STRUCTURAL DESIGN
(PROVIDE ON THE STRUCTURAL SHEETS IF APPLICABLE)

DESIGN LOADS:
Importance Factors: Snow (I_S) 1.0
Seismic (I_E) 1.0
Live Loads: Roof 20 psf
Mezzanine 150 psf
Floor 100 psf
Ground Snow Load: 15 psf
Wind Load: Ultimate Wind Speed 115 mph (ASCE-7)
Exposure Category C

SEISMIC DESIGN CATEGORY: ☐ A ☒ B ☐ C ☐ D
Provide the following Seismic Design Parameters:
Risk Category (Table 1604.5) ☐ I ☒ II ☐ III ☐ IV
Spectral Response Acceleration S_s 15.5 %g S_1 7.7 %g
Site Classification (ASCE 7) ☐ A ☐ B ☐ C ☒ D ☐ E ☐ F
Data Source: ☒ Field Test ☐ Presumptive ☐ Historical Data
Basic structural system:
☒ Bearing Wall ☐ Dual w/Special Moment Frame
☐ Building Frame ☐ Dual w/Intermediate R/C or Special Steel
☐ Moment Frame ☐ Inverted Pendulum
Analysis Procedure: ☐ Slimpilified ☒ Equivalent Lateral Force ☐ Dynamic
Architectural, Mechanical, Components anchored? ☐ Yes ☐ No
LATERAL DESIGN CONTROL: Earthquake ☐ Wind ☒

SOIL BEARING CAPACITIES:
Field Test (provide copy of test report) _____ psf
Presumptive Bearing capacity 2500 psf
Pile size, type, and capacity _____

MECHANICAL DESIGN
(PROVIDE ON THE MECHANICAL SHEETS IF APPLICABLE)
MECHANICAL SUMMARY

MECHANICAL SYSTEMS, SERVICE SYSTEMS AND EQUIPMENT

Thermal Zone
winter dry bulb: 20
summer dry bulb: 95
Interior design conditions
winter dry bulb: 72
summer dry bulb: 70
relative humidity: 50
Building heating load: 382 MBH
Building cooling load: 505 MBH
Mechanical Spacing Conditioning System
Unitary
description of unit: Refer to mechanical schedules
heating efficiency:
cooling efficiency:
size category of unit:
Boiler
Size category. If oversized, state reason: N/A - Existing from central plant
Chiller
Size category. If oversized, state reason: N/A - Existing from central plant
List equipment efficiencies: NEMA Premium efficiency on all motors 3/4 HP and above

ELECTRICAL DESIGN
(PROVIDE ON THE ELECTRICAL SHEETS IF APPLICABLE)
ELECTRICAL SUMMARY

ELECTRICAL SYSTEM AND EQUIPMENT
Method of Compliance:
Energy Code: ☐ Performance ☐ Prescriptive
ASHRAE 90.1: ☐ Performance ☒ Prescriptive

Lighting schedule (each fixture type)
lamp type required in fixture - REFER TO LIGHT FIXTURE SCHEDULE
number of lamps in fixture - REFER TO LIGHT FIXTURE SCHEDULE
ballast type used in the fixture - REFER TO LIGHT FIXTURE SCHEDULE
number of ballasts in fixture - REFER TO LIGHT FIXTURE SCHEDULE
total wattage per fixture - REFER TO LIGHT FIXTURE SCHEDULE
total interior wattage specified vs allowed (whole building or space by space) - 4,176W SPECIFIED, 5,872W ALLOWED
total exterior wattage specified vs allowed - 232W SPECIFIED, 853W ALLOWED

Additional Efficiency Package Options:
(When using the 2018 NCECC; not required for ASHRAE 90.1)
☐ C406.2 More Efficient HVAC Equipment Performance
☐ C406.3 Reduced Lighting Power Density
☐ C406.4 Enhanced Digital Lighting Controls
☐ C406.5 On-Site Renewable Energy
☐ C406.6 Dedicated Outdoor Air System
☐ C406.7 Reduced Energy Use in Service Water Heating

Wagner Architecture, pllc
92 ELAM COURT
NEW HILL, NORTH CAROLINA 27562
TEL. (919) 612.5050

Kramer Engineering Services, pllc
5517 Cascade Dr., Chapel Hill, NC 27514
TEL (919)933-3350
email: donna@kespllc.com
Firm license: P-1099

bennett&pless
formerly LHC STRUCTURAL ENGINEERS
5430 Wade Park Blvd, Suite 400
Raleigh, NC 27607
Tel 919 832 5587
Copyright 2022 ● Bennett & Pless, Inc.
All Rights Reserved
B&P Job Number 22.08.048

NV5 ENGINEERS AND CONSULTANTS, INC.
3300 REGENCY PARKWAY, STE 100
CARY, NC 27518
P: 919.851.1912 www.NV5.com
NC License # F-1333
formerly CALYN Engineers + Consultants

KIMBERLY ANN WAGNER REGISTERED ARCHITECT 10244 NORTH CAROLINA GARNER, NC
WAGNER ARCHITECTURE PLLC Registered Architecture Firm 51882 North Carolina GARNER, NC
5-18-23

PREPARED FOR
NORTH CAROLINA STATE UNIVERSITY
COLLEGE OF VETERINARY MEDICINE

TRUE NORTH
PLAN NORTH

TRANSLATIONAL RESEARCH FACILITY

revisions

building number

cadd file number

drawn by RFW

checked by KAW

date ISSUED FOR CONSTRUCTION–05/18/23

project number NCSU CODE: 42124
ITEM: 305
WA 202207
SCO#: 21–24030–01A

BUILDING CODE SUMMARY

sheet number: G001

revision number:

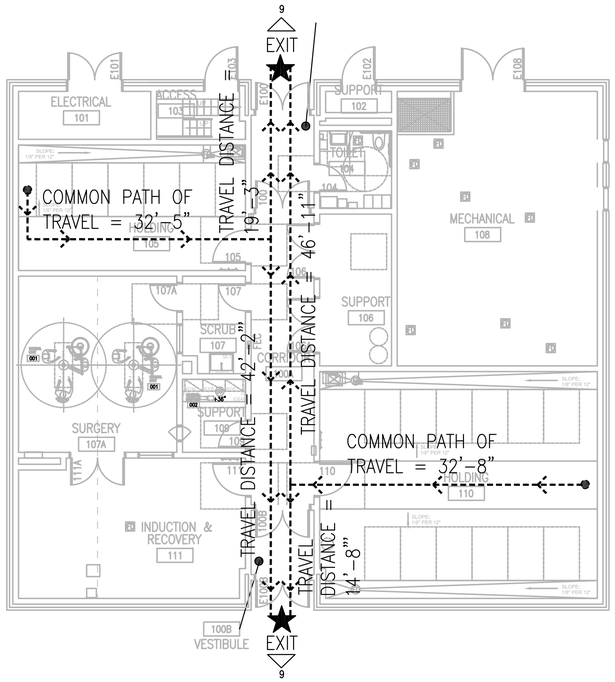

1 FIRST FLOOR LIFE SAFETY PLAN

SCALE: 1/8"=1'-0"

PLAN LEGEND:

— TOTAL # OF OCCUPANTS EGRESSING THROUGH THIS EXIT

	MAXIMUM REQUIRED	MAXIMUM PROVIDED
TRAVEL DISTANCE	200'	46'-11"
COMMON PATH OF EGRESS TRAVEL	100'	32'-8"
DEAD END LIMIT	20'	0'-0"

OCCUPANCY			NEW	
ROOM NUMBER	USE GROUP (TABLE 1004.1)	AREA PER OCCUPANT	AREA (SF)	OCCUPANCY
100, 100A, 100B, 105, 108, 110	ACCESSORY STORAGE AND MECH. (ANIMAL HOLDING AND MECHANICAL)	300 GSF	1996 SF	7
ALL OTHER AREAS	BUSINESS AREAS		1621 SF	17
		TOTAL	3,617 SF	24

LIFE SAFETY PLAN NOTES:

1. SEE A000 AND C402 FOR PROJECT SCOPE/LIMITS-OF-CONSTRUCTION (LOC).

Wagner Architecture, pllc
92 ELAM COURT
NEW HILL, NORTH CAROLINA 27562
TEL. (919) 612.5050

Kramer Engineering Services, pllc
5517 Cascade Dr., Chapel Hill, NC 27514
TEL (919)933-3350
email: donna@kespllc.com
Firm license: P-1099

bennett&pless
formerly LHC STRUCTURAL ENGINEERS
5430 Wade Park Blvd, Suite 400
Raleigh, NC 27607
Tel 919 832 5587

Copyright 2022 ● Bennett & Pless, Inc.
All Rights Reserved

B&P Job Number 22.08.048

NV5
NV5 ENGINEERS AND CONSULTANTS, INC.
3300 REGENCY PARKWAY, STE 100
CARY, NC 27518
P: 919.851.1912 www.NV5.com
NC License # F-1333
formerly CALYX Engineers + Consultants

KIMBERLY ANN WAGNER REGISTERED ARCHITECT 10244 NORTH CAROLINA GARNER, NC
WAGNER ARCHITECTURE PLLC Registered Architectural Firm 51882 North Carolina GARNER, NC
5-18-23

PREPARED FOR
NORTH CAROLINA STATE UNIVERSITY
COLLEGE OF VETERINARY MEDICINE

MAXIMUM ALLOWABLE QUANTITY PER CONTROL AREA OF HAZARDOUS MATERIALS POSING A PHYSICAL OR HEALTH HAZARD
TABLE 307.1(1) & 307.1(2) 2012 NORTH CAROLINA BUILDING CODE

MATERIAL	CLASS	GROUP WHEN MAXIMUM QUANTITY IS EXCEEDED	LIMIT IN UNSPRINKLERED BUILDING	LIMIT IF APPROVED STORAGE IS USED	QUANTITIES REPORTED IN PROJECT
COMBUSTIBLE LIQUIDS	II IIIA IIIB	H-2 OR H-3 H-2 OR H-3 N/A	120gal (908 L.) 330gal (2,898 L.) 13,200gal (99,924 L.)	240gal (908 L.) 660gal (2,898 L.) 26,400gal (99,924 L.)	FORMALIN, 2 GAL MAX.
OXIDIZER	4, 3, 2, 1	H-1, H-2, H-3, H-3	1; 10LBS;250LBS 4,000 LBS (LIQUID); (GAS-N.A.)	2; 20LBS; 500 LBS; 8,000LBS(LIQUID);(GAS-N.A.)	PEROXIGARD, 0.5% HYDROGEN PEROXIDE, 1 GAL MAX.
OXIDIZING GAS	GASEOUS LIQUIFIED	H-3	GASEOUS (1,500 cu.ft.); LIQUIFIED 150 LBS	GASEOUS (3,000 cu.ft.); LIQUIFIED 300 LBS	2 SIZE H CYLINDERS OF OXYGEN, 500 CU.FT. MAX.
HEALTH HAZARDS					
CORROSIVE			5,000 LBS. SOLID; 500 GAL. LIQUID; 810cu.ft. GAS, liquefied 150 lbs	10,000 LBS. SOLID; 1,000 GAL. LIQUID; 1,620cu.ft. GAS, liquefied 300 lbs	FORMALIN, 2 GAL MAX.
TOXIC			500 LBS. SOLID; 500 gal. LIQUID; 810cu.ft. GAS, liquefied 150 lbs	1,000 LBS. SOLID; 1,000 gal. LIQUID; 1,620cu.ft. GAS, liquefied 300 lbs	FORMALIN, 2 GAL MAX.

NA = NOT ALLOWED IN UNSPRINKLERED BUILDING

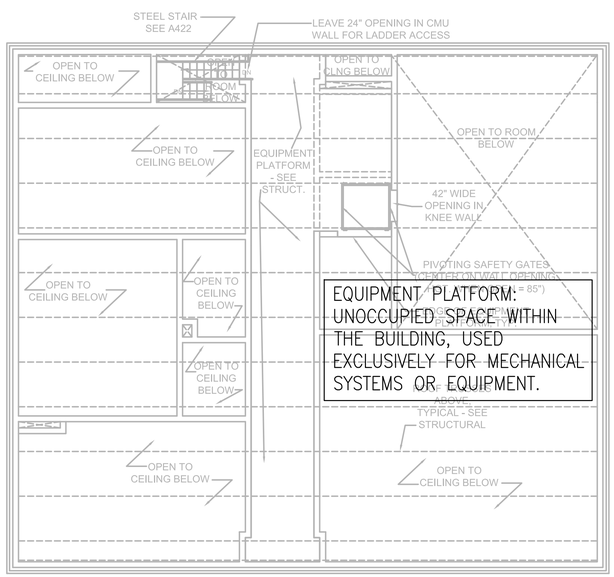

2 EQUIPMENT PLATFORM LIFE SAFETY PLAN

SCALE: 1/8"=1'-0"

TRUE NORTH
PLAN NORTH

TRANSLATIONAL RESEARCH FACILITY

revisions

building number

cadd file number

drawn by RFW

checked by KAW

date ISSUED FOR CONSTRUCTION-05/18/23

project number
NCSU CODE: 42124
ITEM: 305
WA 202207
SCO#: 21-24030-01A

LIFE SAFETY PLAN

LINETYPE LEGEND:

- NEW PARTITION
- EXISTING CONSTRUCTION
- 1 HOUR PARTITION

sheet number G002

revision number

"ALL CONSTRUCTION TO BE IN ACCORDANCE WITH ALL CITY OF RALEIGH AND / OR NCDOT STANDARDS AND SPECIFICATIONS"

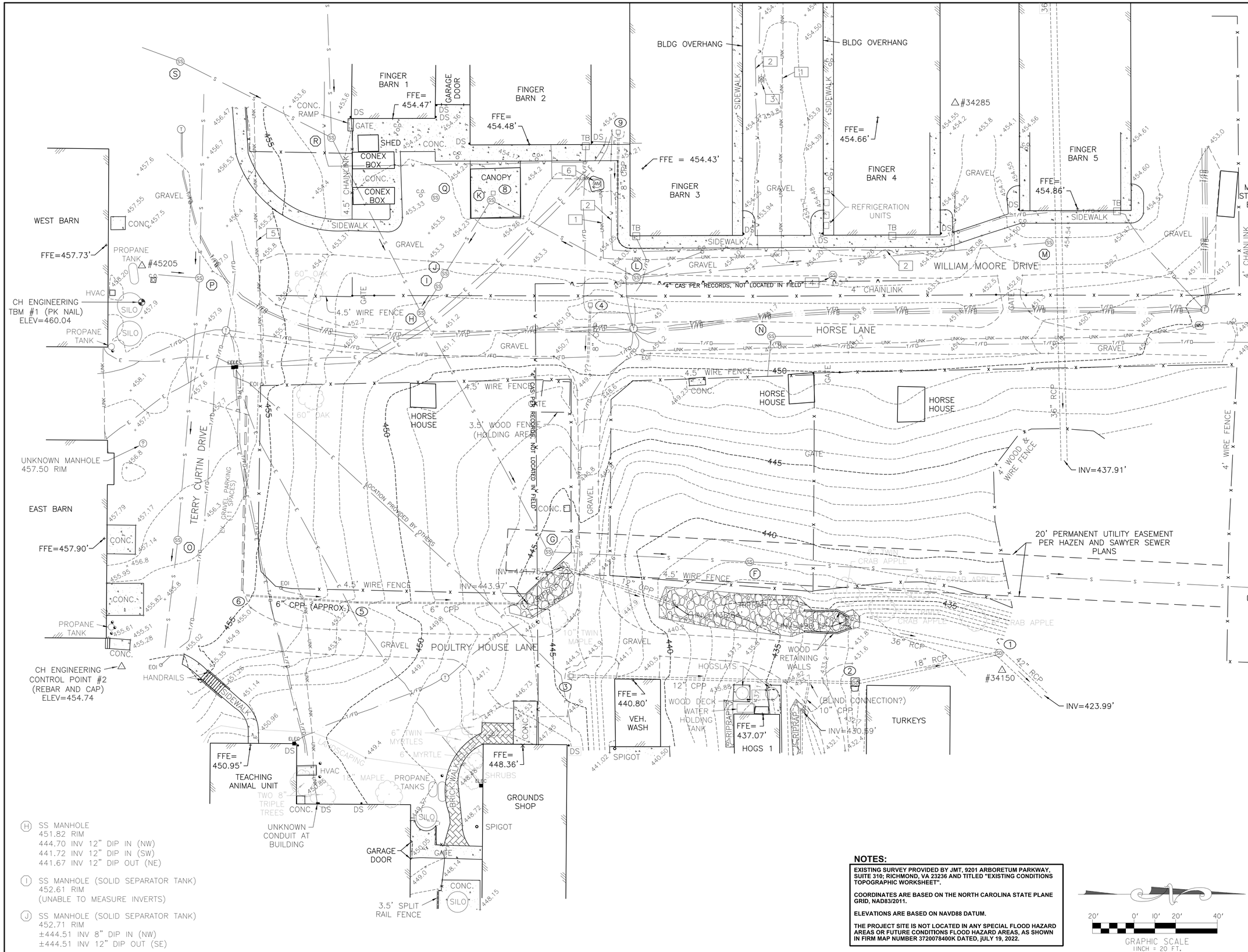

(H) SS MANHOLE
451.82 RIM
444.70 INV 12" DIP IN (NW)
441.72 INV 12" DIP IN (SW)
441.67 INV 12" DIP OUT (NE)

(I) SS MANHOLE (SOLID SEPARATOR TANK)
452.61 RIM
(UNABLE TO MEASURE INVERTS)

(J) SS MANHOLE (SOLID SEPARATOR TANK)
452.71 RIM
±444.51 INV 8" DIP IN (NW)
±444.51 INV 12" DIP OUT (SE)

NOTES:

EXISTING SURVEY PROVIDED BY JMT, 9201 ARBORETUM PARKWAY, SUITE 310; RICHMOND, VA 23236 AND TITLED "EXISTING CONDITIONS TOPOGRAPHIC WORKSHEET".

COORDINATES ARE BASED ON THE NORTH CAROLINA STATE PLANE GRID, NAD83/2011.

ELEVATIONS ARE BASED ON NAVD88 DATUM.

THE PROJECT SITE IS NOT LOCATED IN ANY SPECIAL FLOOD HAZARD AREAS OR FUTURE CONDITIONS FLOOD HAZARD AREAS, AS SHOWN IN FIRM MAP NUMBER 3720078400K DATED, JULY 19, 2022.

20' 0' 10' 20' 40'
GRAPHIC SCALE
1 INCH = 20 FT.

Wagner Architecture, pllc
92 ELAM COURT
NEW HILL, NORTH CAROLINA 27562
TEL. (919) 612.5050

Kramer Engineering Services, pllc
100 S. Camellia St. Chapel Hill, NC 27516
TEL (919)933-3350
email: donna@kesplic.com
Firm license: P-1099

bennett&pless
formerly LHC STRUCTURAL ENGINEERS
5430 Wade Park Blvd, Suite 400
Raleigh, NC 27607
Tel 919 832 5587

Copyright 2022 • Bennett & Pless, Inc.
All Rights Reserved

B & P Job Number 22.08.048

NV5 ENGINEERS AND CONSULTANTS, INC.
3300 REGENCY PARKWAY, STE 100
CARY, NC 27518
P: 919.851.1912 www.NV5.com
NC License # F-1333
formerly CALYX Engineers + Consultants

NORTH CAROLINA PROFESSIONAL SEAL 22514 ENGINEER MICHAEL D. ALLEN
5/18/23

PREPARED FOR
NORTH CAROLINA STATE UNIVERSITY
COLLEGE OF VETERINARY MEDICINE

TRANSLATIONAL RESEARCH FACILITY

revisions

building number

cadd file number

drawn by DFB

checked by MDA

date Issued for Construction 05/18/2023

project number
NCSU CODE: 42124
ITEM: 305
WA 202207
SCO#: 21-24030-01A

C-001

EXISTING CONDITIONS

sheet number: revision number:

"ALL CONSTRUCTION TO BE IN ACCORDANCE WITH ALL CITY OF RALEIGH AND / OR NCDOT STANDARDS AND SPECIFICATIONS"

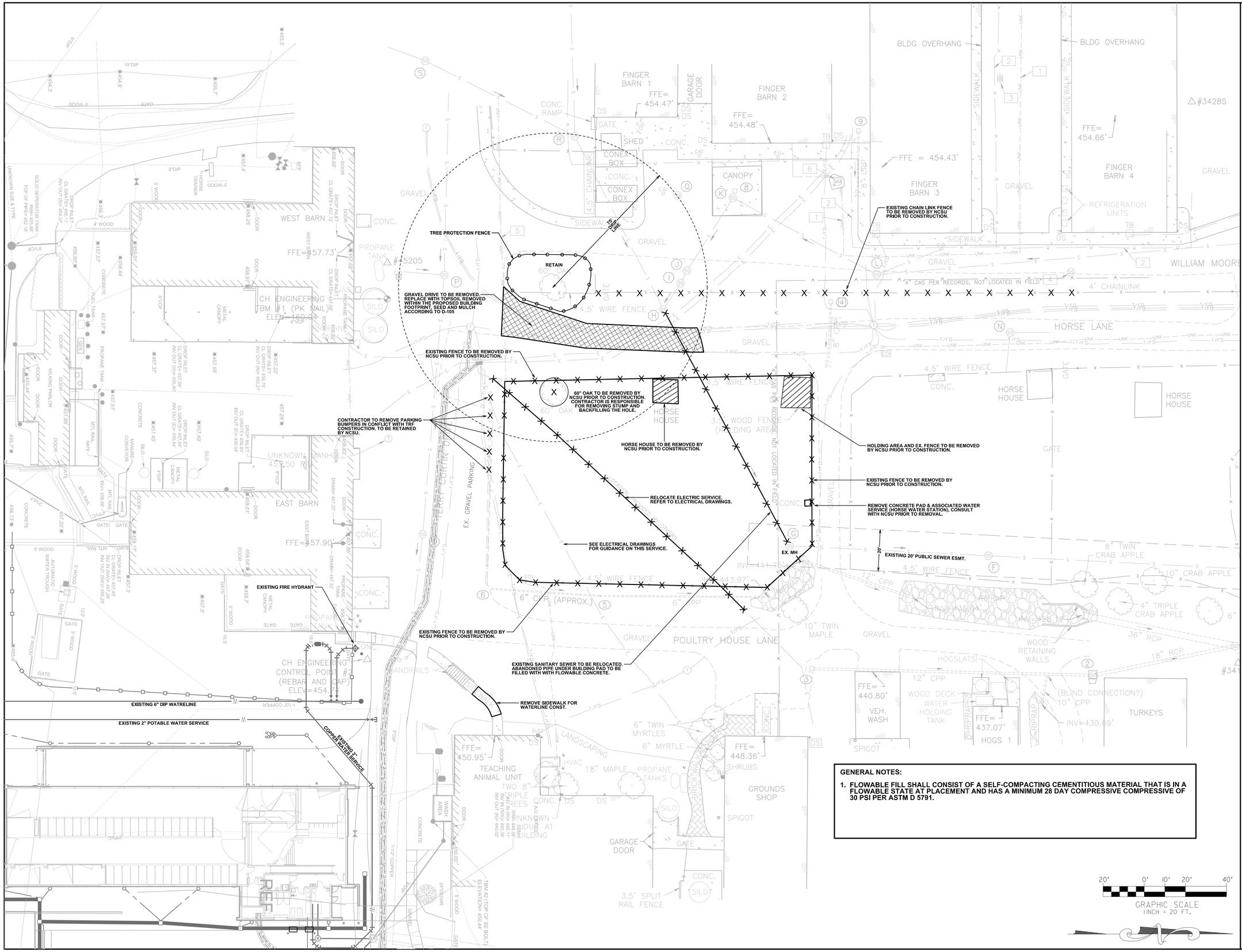

GENERAL NOTES:

1. **FLOWABLE FILL SHALL CONSIST OF A SELF-COMPACTING CEMENTITIOUS MATERIAL THAT IS IN A FLOWABLE STATE AT PLACEMENT AND HAS A MINIMUM 28 DAY COMPRESSIVE COMPRESSIVE OF 30 PSI PER ASTM D 5791.**

Wagner Architecture, pllc
92 ELAM COURT
NEW HILL, NORTH CAROLINA 27562
TEL. (919) 612.5050

Kramer Engineering Services, pllc
100 S. Camellia St. Chapel Hill, NC 27516
TEL (919)933-3350
email: donna@kesplic.com
Firm license: P-1099

bennett&pless
formerly LHC STRUCTURAL ENGINEERS
5430 Wade Park Blvd, Suite 400
Raleigh, NC 27607
Tel 919 832 5587

Copyright 2022 • **Bennett & Pless, Inc.**
All Rights Reserved

B & P Job Number 22.08.048

NV5 ENGINEERS AND CONSULTANTS, INC.
3300 REGENCY PARKWAY, STE 100
CARY, NC 27518
P: 919.851.1912 www.NV5.com
NC License # F-1333
formerly CALVV Engineers • Consultants

NORTH CAROLINA PROFESSIONAL SEAL 22514 ENGINEER MICHAEL D. ALLEN 5/18/23

PREPARED FOR
NORTH CAROLINA STATE UNIVERSITY
COLLEGE OF VETERINARY MEDICINE

TRANSLATIONAL RESEARCH FACILITY

revisions

building number

cadd file number

drawn by DFB

checked by MDA

date Issued for Construction 05/18/2023

project number
NCSU CODE: 42124
ITEM: 305
WA 202207
SCO#: 21-24030-01A

C-100

DEMOLITION PLAN

sheet number: revision number:

"ALL CONSTRUCTION TO BE IN ACCORDANCE WITH ALL CITY OF RALEIGH AND / OR NCDOT STANDARDS AND SPECIFICATIONS"

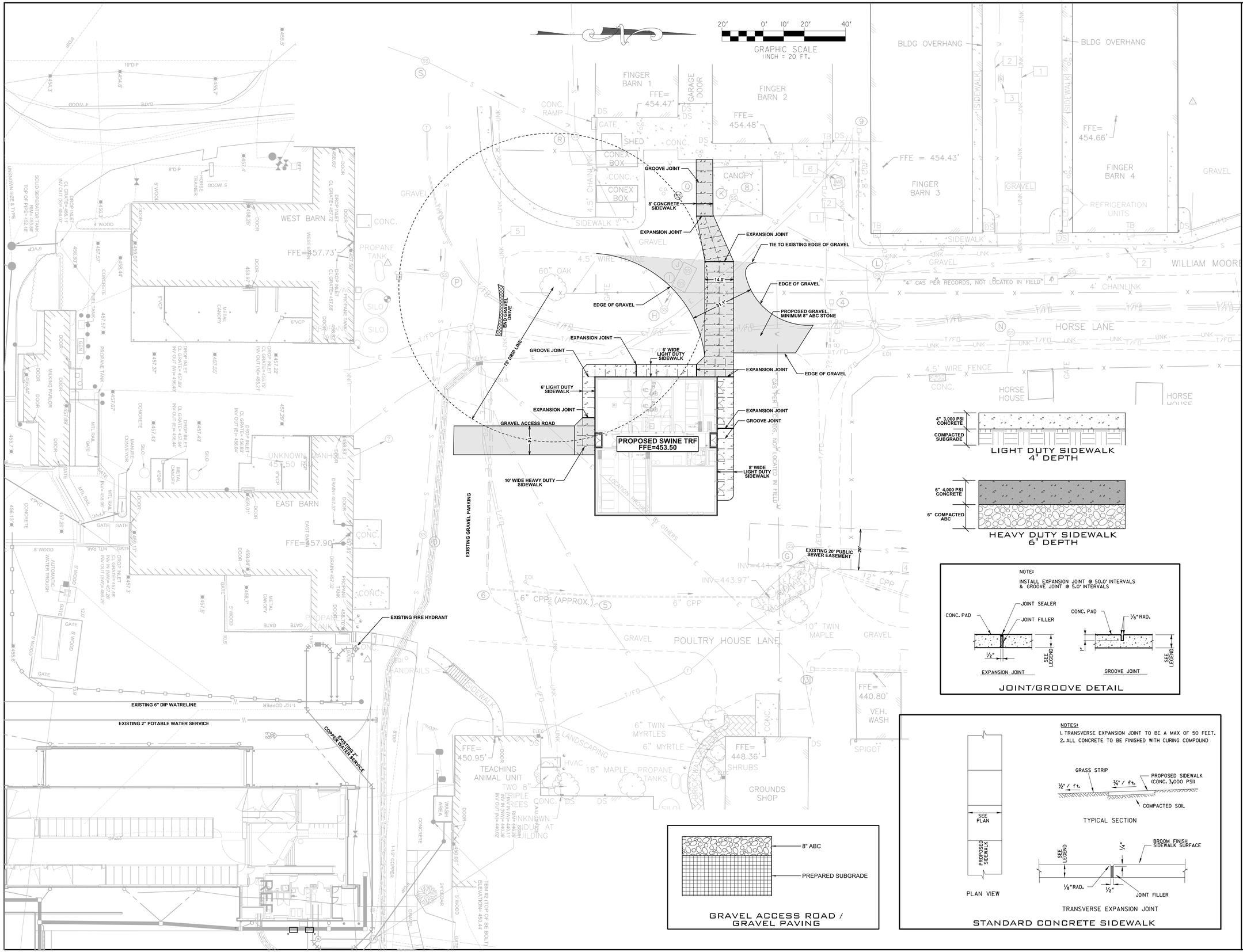

LIGHT DUTY SIDEWALK 4" DEPTH

HEAVY DUTY SIDEWALK 6" DEPTH

JOINT/GROOVE DETAIL

STANDARD CONCRETE SIDEWALK

GRAVEL ACCESS ROAD / GRAVEL PAVING

Wagner Architecture, pllc
92 ELAM COURT
NEW HILL, NORTH CAROLINA 27562
TEL. (919) 612.5050

Kramer Engineering Services, pllc
100 S. Camellia St. Chapel Hill, NC 27516
TEL (919)933-3350
email: donna@kesplic.com
Firm license: P-1099

bennett&pless
formerly LHC STRUCTURAL ENGINEERS
5430 Wade Park Blvd, Suite 400
Raleigh, NC 27607
Tel 919 832 5587

Copyright 2022 • **Bennett & Pless, Inc.**
All Rights Reserved

B & P Job Number 22.08.048

NV5 ENGINEERS AND CONSULTANTS, INC.
3300 REGENCY PARKWAY, STE 100
CARY, NC 27518
P: 919.851.1912 www.NV5.com
NC License # F-1333
formerly DALVA Engineers • Consultants

NORTH CAROLINA PROFESSIONAL SEAL 22514 ENGINEER MICHAEL D. ALLEN
5/18/23

PREPARED FOR
NORTH CAROLINA STATE UNIVERSITY
COLLEGE OF VETERINARY MEDICINE

TRANSLATIONAL RESEARCH FACILITY

revisions

building number

cadd file number

drawn by DFB

checked by MDA

date Issued for Construction 05/18/2023

project number
NCSU CODE: 42124
ITEM: 305
WA 202207
SCO#: 21-24030-01A

C-200

SITE PLAN

sheet number: revision number:

"ALL CONSTRUCTION TO BE IN ACCORDANCE WITH ALL CITY OF RALEIGH AND / OR NCDOT STANDARDS AND SPECIFICATIONS"

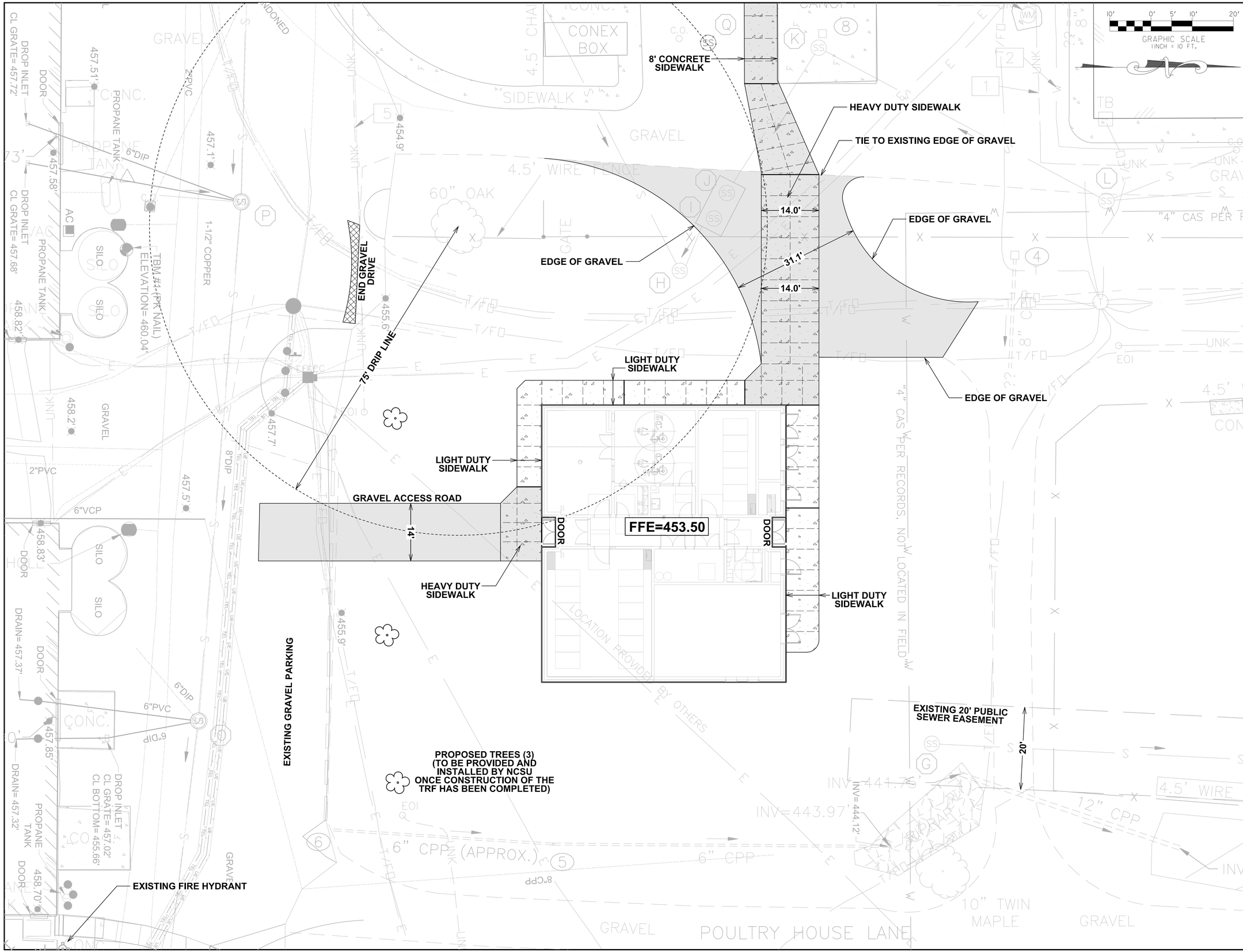

Wagner Architecture, pllc
92 ELAM COURT
NEW HILL, NORTH CAROLINA 27562
TEL. (919) 612.5050

Kramer Engineering Services, pllc
100 S. Camellia St. Chapel Hill, NC 27516
TEL (919)933-3350
email: donna@kesplic.com
Firm license: P-1099

bennett&pless
formerly LHC STRUCTURAL ENGINEERS
5430 Wade Park Blvd, Suite 400
Raleigh, NC 27607
Tel 919 832 5587

Copyright 2022 • Bennett & Pless, Inc.
All Rights Reserved

B & P Job Number 22.08.048

NV5 ENGINEERS AND CONSULTANTS, INC.
3300 REGENCY PARKWAY, STE 100
CARY, NC 27518
P: 919.851.1912 www.NV5.com
NC License # F-1333
formerly CALVX Engineers + Consultants

NORTH CAROLINA PROFESSIONAL SEAL 22514 ENGINEER MICHAEL D. ALLEN 5/18/23

PREPARED FOR
NORTH CAROLINA STATE UNIVERSITY
COLLEGE OF VETERINARY MEDICINE

TRANSLATIONAL RESEARCH FACILITY

revisions

building number

cadd file number

drawn by DFB

checked by MDA

date Issued for Construction 05/18/2023

project number
NCSU CODE: 42124
ITEM: 305
WA 202207
SCO#: 21-24030-01A

C-201

SITE PLAN ENLARGEMENT

sheet number: revision number:

"ALL CONSTRUCTION TO BE IN ACCORDANCE WITH ALL CITY OF RALEIGH AND / OR NCDOT STANDARDS AND SPECIFICATIONS"

GENERAL NOTES:

1. PARCEL LINES TAKEN FROM WAKE COUNTY GIS.

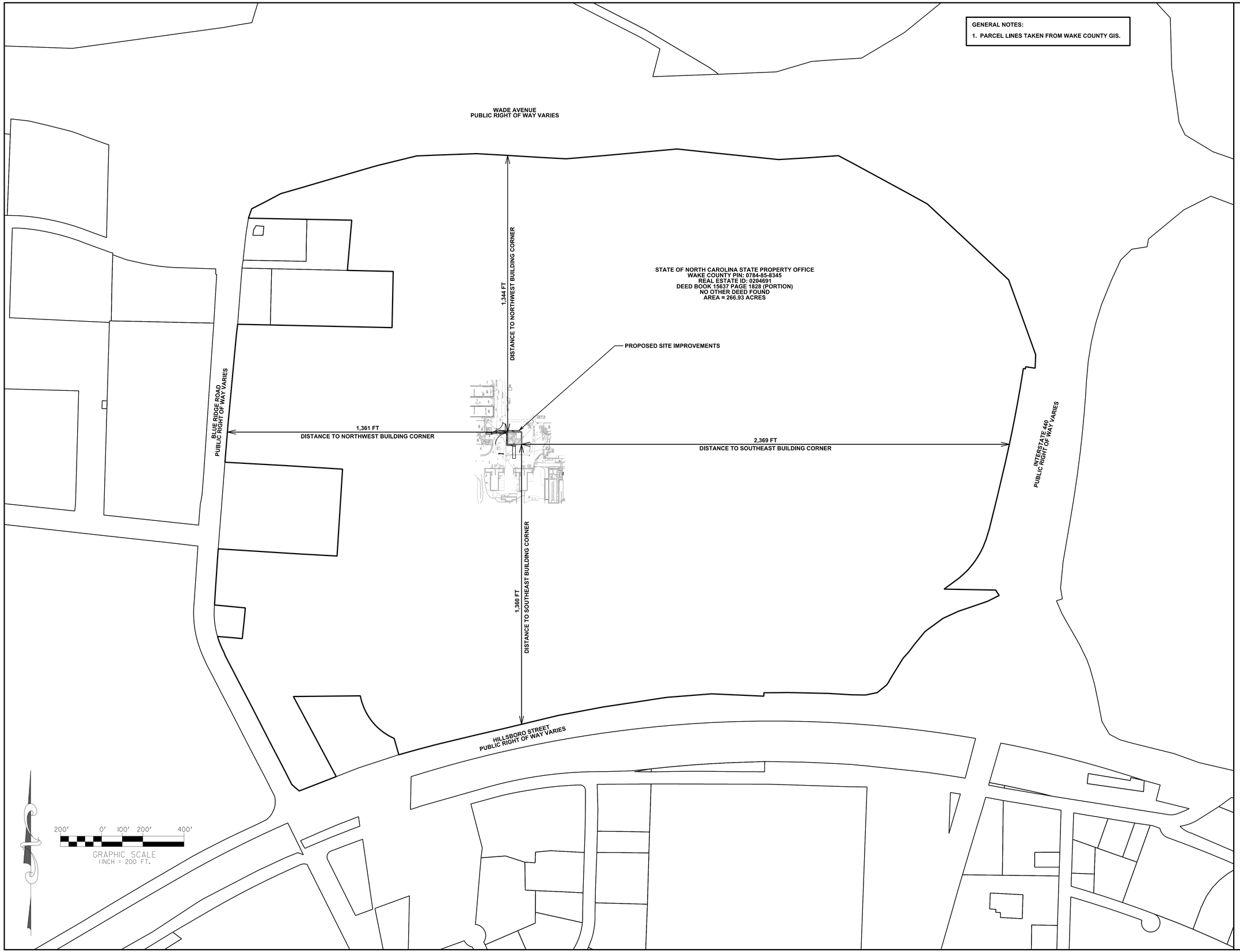

Wagner Architecture, pllc
92 ELAM COURT
NEW HILL, NORTH CAROLINA 27562
TEL. (919) 612.5050

Kramer Engineering Services, pllc
100 S. Camellia St. Chapel Hill, NC 27516
TEL (919)933-3350
email: donna@kesplic.com
Firm license: P-1099

bennett&pless
formerly LHC STRUCTURAL ENGINEERS
5430 Wade Park Blvd, Suite 400
Raleigh, NC 27607
Tel 919 832 5587

Copyright 2022 • **Bennett & Pless, Inc.**
All Rights Reserved

B & P Job Number 22.08.048

NV5
NV5 ENGINEERS AND CONSULTANTS, INC.
3300 REGENCY PARKWAY, STE 100
CARY, NC 27518
P: 919.851.1912 www.NV5.com
NC License # F-1333
formerly CALVX Engineers • Consultants

NORTH CAROLINA PROFESSIONAL SEAL 22514 ENGINEER MICHAEL D. ALLEN
5/18/23

PREPARED FOR
NORTH CAROLINA
STATE UNIVERSITY
COLLEGE OF VETERINARY
MEDICINE

TRANSLATIONAL RESEARCH FACILITY

revisions

building number

cadd file number

drawn by DFB

checked by MDA

date Issued for Construction 05/18/2023

project number
NCSU CODE: 42124
ITEM: 305
WA 202207
SCO#: 21-24030-01A

C-202

PROPERTY EXHIBIT

sheet number: revision number:

"ALL CONSTRUCTION TO BE IN ACCORDANCE WITH ALL CITY OF RALEIGH AND / OR NCDOT STANDARDS AND SPECIFICATIONS"

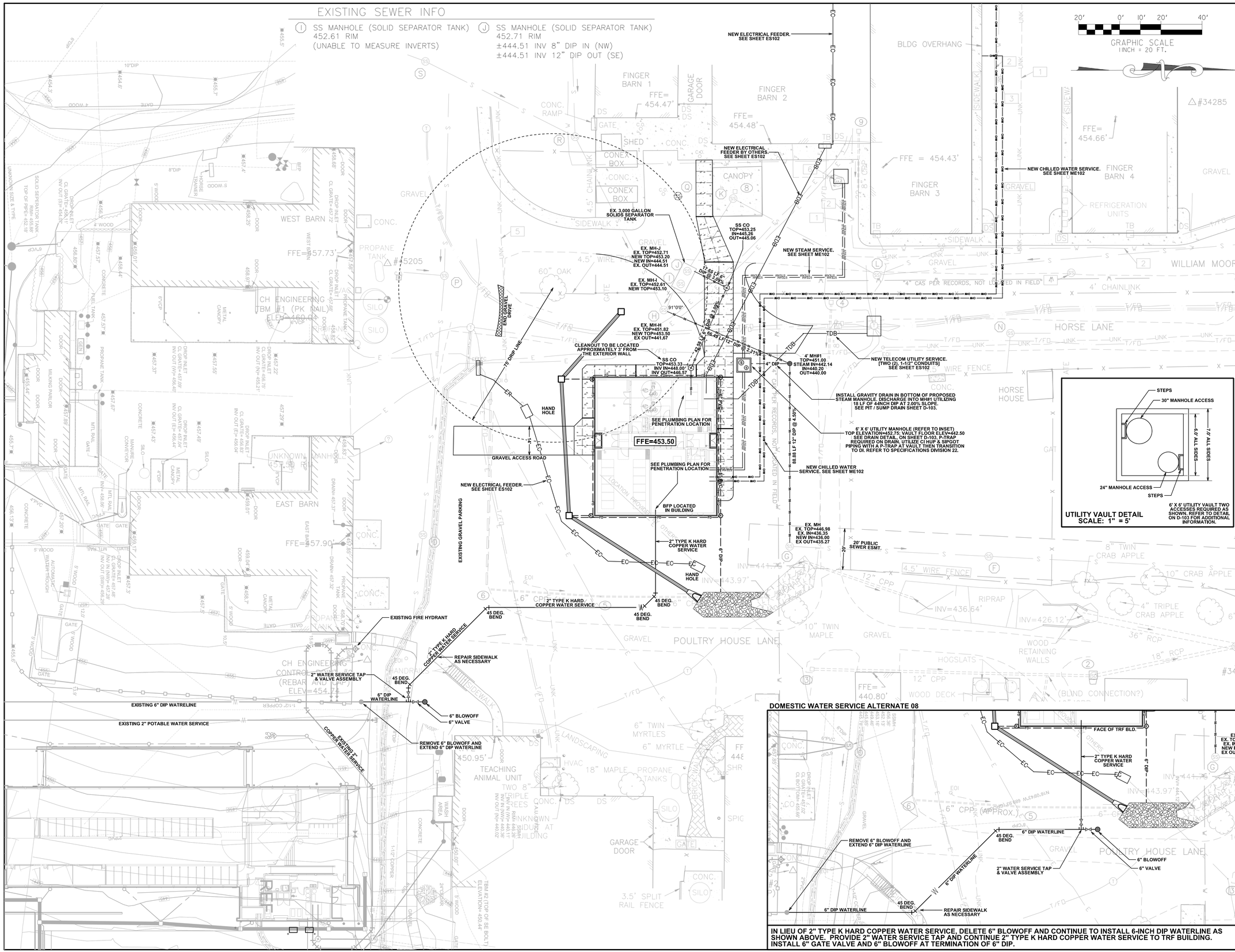

Wagner Architecture, pllc
92 ELAM COURT
NEW HILL, NORTH CAROLINA 27562
TEL. (919) 612.5050

Kramer Engineering Services, pllc
100 S. Camellia St. Chapel Hill, NC 27516
TEL (919)933-3350
email: donna@kesplic.com
Firm license: P-1099

bennett&pless
formerly LHC STRUCTURAL ENGINEERS
5430 Wade Park Blvd, Suite 400
Raleigh, NC 27607
Tel 919 832 5587

Copyright 2022 • Bennett & Pless, Inc.
All Rights Reserved

B & P Job Number 22.08.048

NV5 ENGINEERS AND CONSULTANTS, INC.
3300 REGENCY PARKWAY, STE 100
CARY, NC 27518
P: 919.851.1912 www.NV5.com
NC License # F-1333
formerly CALVIN Engineers + Consultants

NORTH CAROLINA PROFESSIONAL SEAL 22514 ENGINEER MICHAEL D. ALLEN
5/18/23

PREPARED FOR
NORTH CAROLINA STATE UNIVERSITY
COLLEGE OF VETERINARY MEDICINE

TRANSLATIONAL RESEARCH FACILITY

revisions

building number

cadd file number

drawn by DFB

checked by MDA

date Issued for Construction 05/18/2023

project number
NCSU CODE: 42124
ITEM: 305
WA 202207
SCO#: 21-24030-01A

C-300

UTILITY PLAN

sheet number: revision number:

"ALL CONSTRUCTION TO BE IN ACCORDANCE WITH ALL CITY OF RALEIGH AND / OR NCDOT STANDARDS AND SPECIFICATIONS"

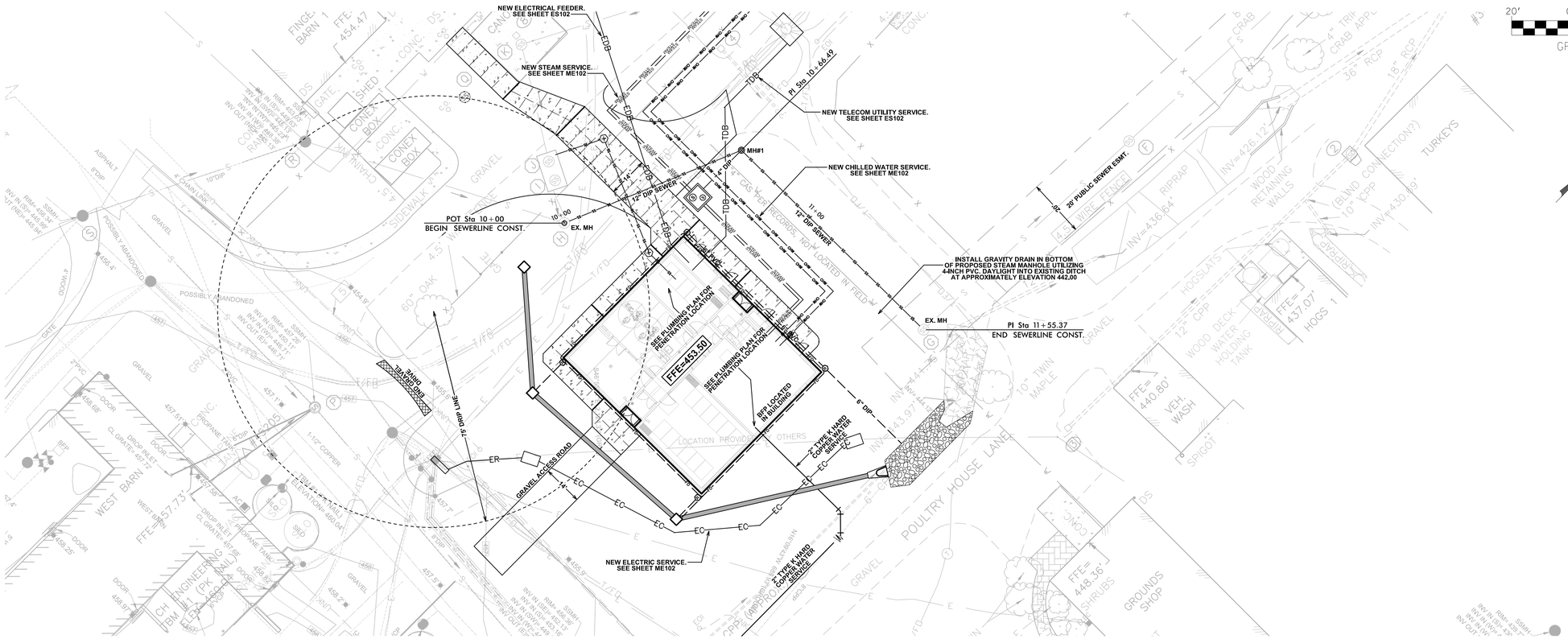

Wagner Architecture, pllc
92 ELAM COURT
NEW HILL, NORTH CAROLINA 27562
TEL. (919) 612.5050

Kramer Engineering Services, pllc
100 S. Camellia St. Chapel Hill, NC 27516
TEL (919)933-3350
email: donna@kesplic.com
Firm license: P-1099

bennett&pless
formerly LHC STRUCTURAL ENGINEERS
5430 Wade Park Blvd, Suite 400
Raleigh, NC 27607
Tel 919 832 5587

Copyright 2022 • Bennett & Pless, Inc.
All Rights Reserved

B & P Job Number 22.08.048

NV5 ENGINEERS AND CONSULTANTS, INC.
3300 REGENCY PARKWAY, STE 100
CARY, NC 27518
P: 919.851.1912 www.NV5.com
NC License # F-1333
formerly CALYX Engineers + Consultants

NORTH CAROLINA PROFESSIONAL SEAL 22514 ENGINEER MICHAEL D. ALLEN
5/18/23

PREPARED FOR
NORTH CAROLINA STATE UNIVERSITY
COLLEGE OF VETERINARY MEDICINE

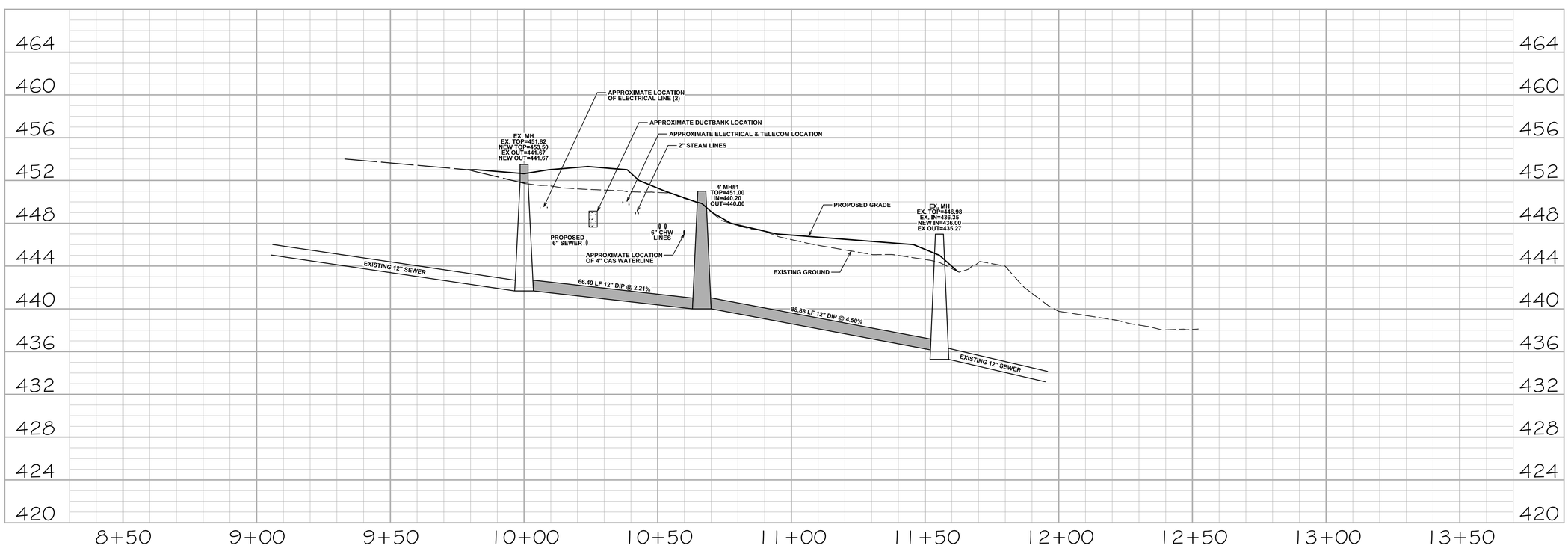

TRANSLATIONAL RESEARCH FACILITY

revisions

building number

cadd file number

drawn by DFB

checked by MDA

date Issued for Construction 05/18/2023

project number
NCSU CODE: 42124
ITEM: 305
WA 202207
SCO#: 21-24030-01A

C-301

SEWER PROFILE

sheet number: revision number:

"ALL CONSTRUCTION TO BE IN ACCORDANCE WITH ALL CITY OF RALEIGH AND / OR NCDOT STANDARDS AND SPECIFICATIONS"

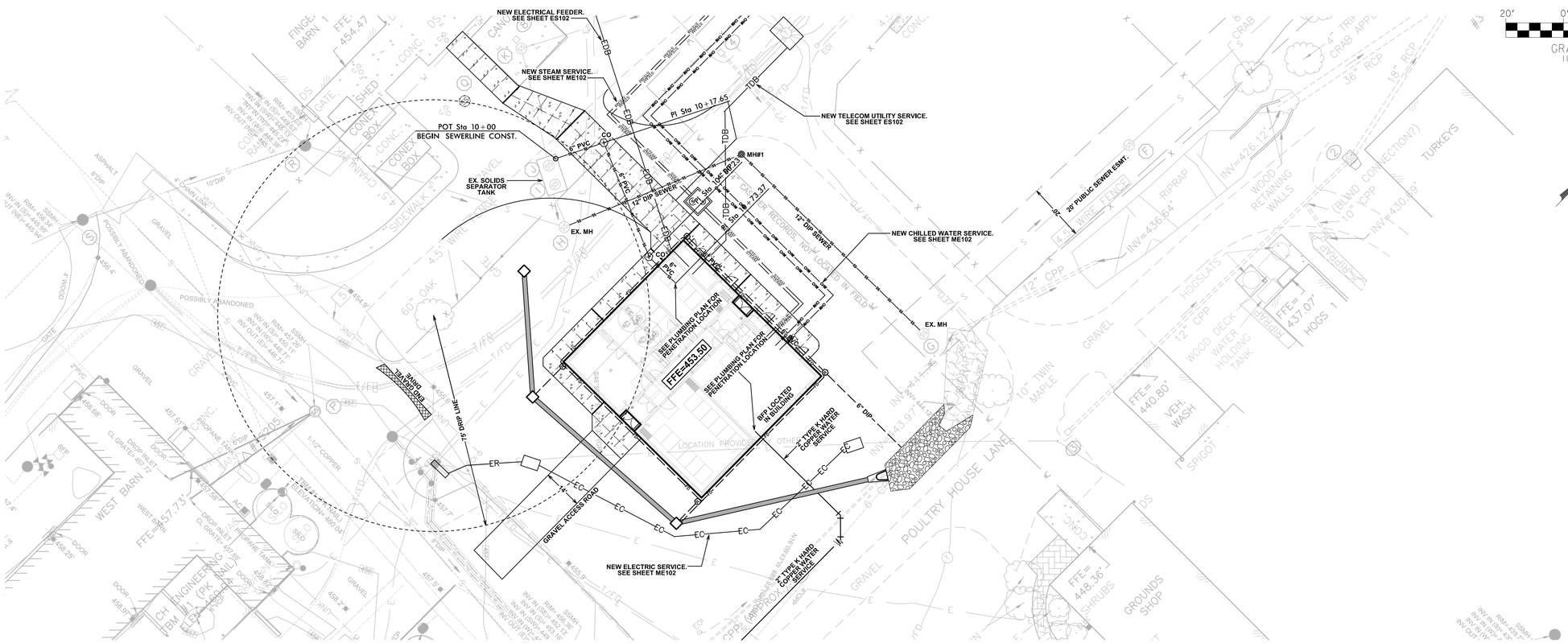

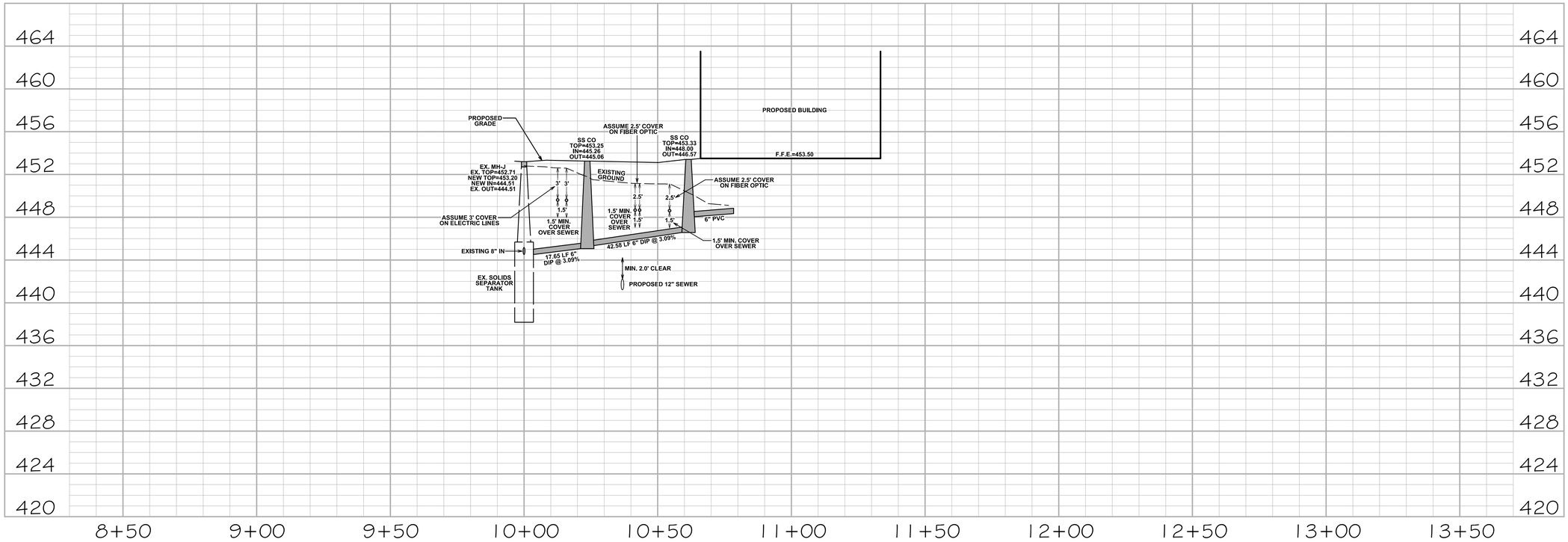

Wagner Architecture, pllc
92 ELAM COURT
NEW HILL, NORTH CAROLINA 27562
TEL. (919) 612.5050

Kramer Engineering Services, pllc
100 S. Camellia St. Chapel Hill, NC 27516
TEL (919)933-3350
email: donna@kesplic.com
Firm license: P-1099

bennett&pless
formerly LHC STRUCTURAL ENGINEERS
5430 Wade Park Blvd, Suite 400
Raleigh, NC 27607
Tel 919 832 5587

Copyright 2022 • Bennett & Pless, Inc.
All Rights Reserved

B & P Job Number 22.08.048

NV5 ENGINEERS AND CONSULTANTS, INC.
3300 REGENCY PARKWAY, STE 100
CARY, NC 27518
P: 919.851.1912 www.NV5.com
NC License # F-1333
formerly CALYX Engineers + Consultants

NORTH CAROLINA PROFESSIONAL SEAL 22514 ENGINEER MICHAEL D. ALLEN 5/18/23

PREPARED FOR
NORTH CAROLINA STATE UNIVERSITY
COLLEGE OF VETERINARY MEDICINE

TRANSLATIONAL RESEARCH FACILITY

revisions

building number
cadd file number
drawn by DFB
checked by MDA
date Issued for Construction 05/18/2023
project number
NCSU CODE: 42124
ITEM: 305
WA 202207
SCO#: 21-24030-01A

C-302

SEWER PROFILE

sheet number: revision number:

"ALL CONSTRUCTION TO BE IN ACCORDANCE WITH ALL CITY OF RALEIGH AND / OR NCDOT STANDARDS AND SPECIFICATIONS"

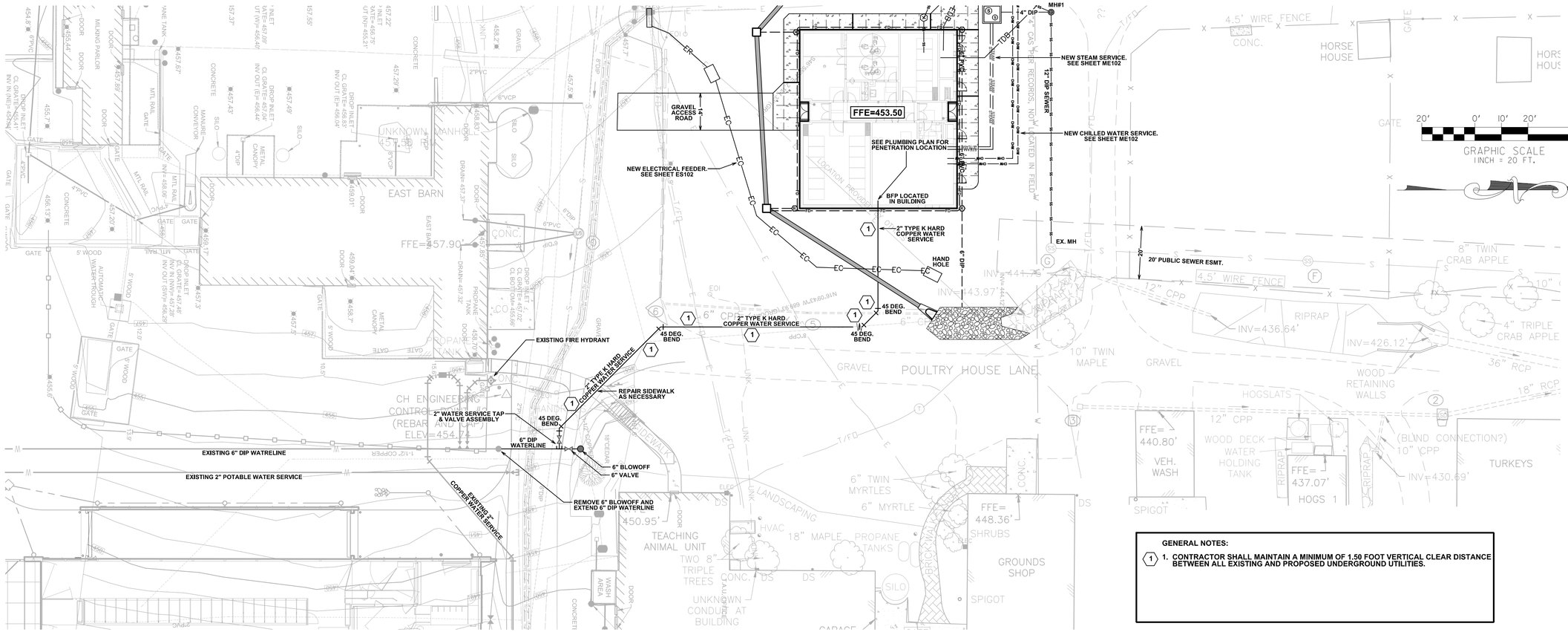

GENERAL NOTES:

1. CONTRACTOR SHALL MAINTAIN A MINIMUM OF 1.50 FOOT VERTICAL CLEAR DISTANCE BETWEEN ALL EXISTING AND PROPOSED UNDERGROUND UTILITIES.

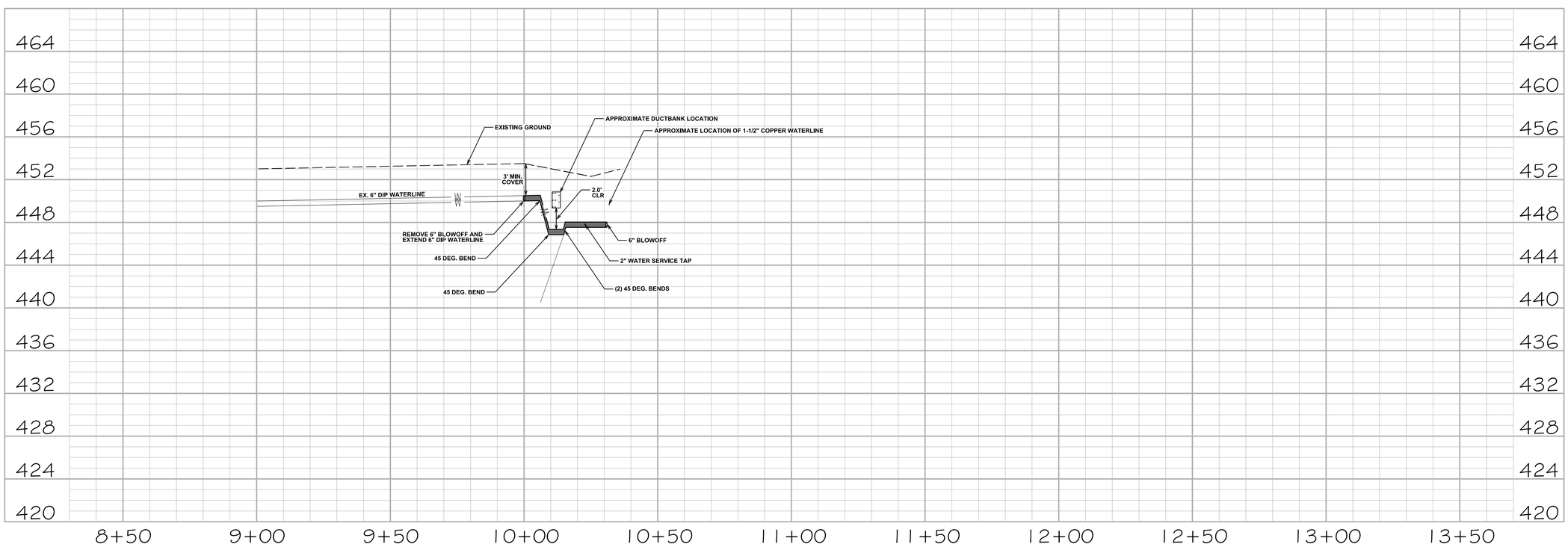

Wagner Architecture, pllc
92 ELAM COURT
NEW HILL, NORTH CAROLINA 27562
TEL. (919) 612.5050

Kramer Engineering Services, pllc
100 S. Camellia St. Chapel Hill, NC 27516
TEL (919)933-3350
email: donna@kesplic.com
Firm license: P-1099

bennett&pless
formerly LHC STRUCTURAL ENGINEERS
5430 Wade Park Blvd, Suite 400
Raleigh, NC 27607
Tel 919 832 5587

Copyright 2022 • Bennett & Pless, Inc.
All Rights Reserved

B & P Job Number 22.08.048

NV5 ENGINEERS AND CONSULTANTS, INC.
3300 REGENCY PARKWAY, STE 100
CARY, NC 27518
P: 919.851.1912 www.NV5.com
NC License # F-1333
formerly CALVX Engineers • Consultants

NORTH CAROLINA PROFESSIONAL SEAL 22514 ENGINEER MICHAEL D. ALLEN
5/18/23

PREPARED FOR
NORTH CAROLINA STATE UNIVERSITY
COLLEGE OF VETERINARY MEDICINE

TRANSLATIONAL RESEARCH FACILITY

revisions

building number

cadd file number

drawn by DFB

checked by MDA

date Issued for Construction 05/18/2023

project number
NCSU CODE: 42124
ITEM: 305
WA 202207
SCO#: 21-24030-01A

C-303

WATER PROFILE

sheet number: revision number:

"ALL CONSTRUCTION TO BE IN ACCORDANCE WITH ALL CITY OF RALEIGH AND / OR NCDOT STANDARDS AND SPECIFICATIONS"

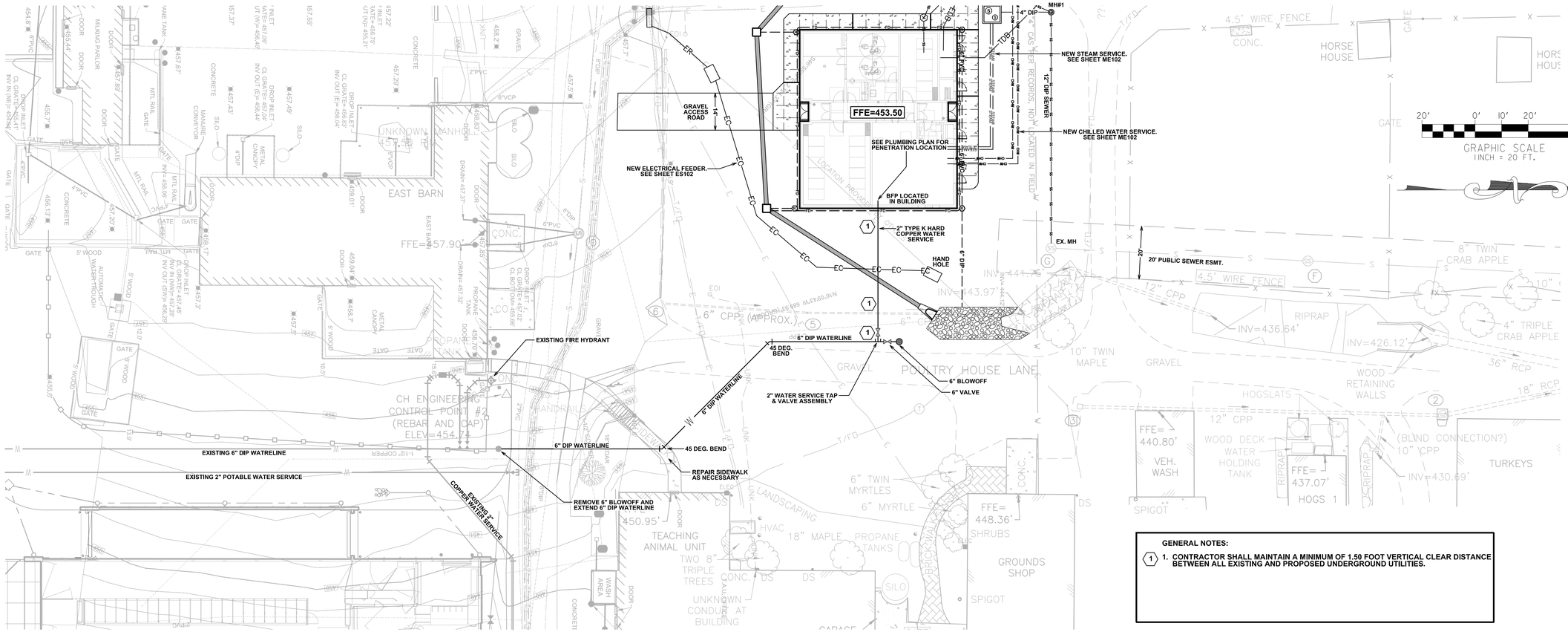

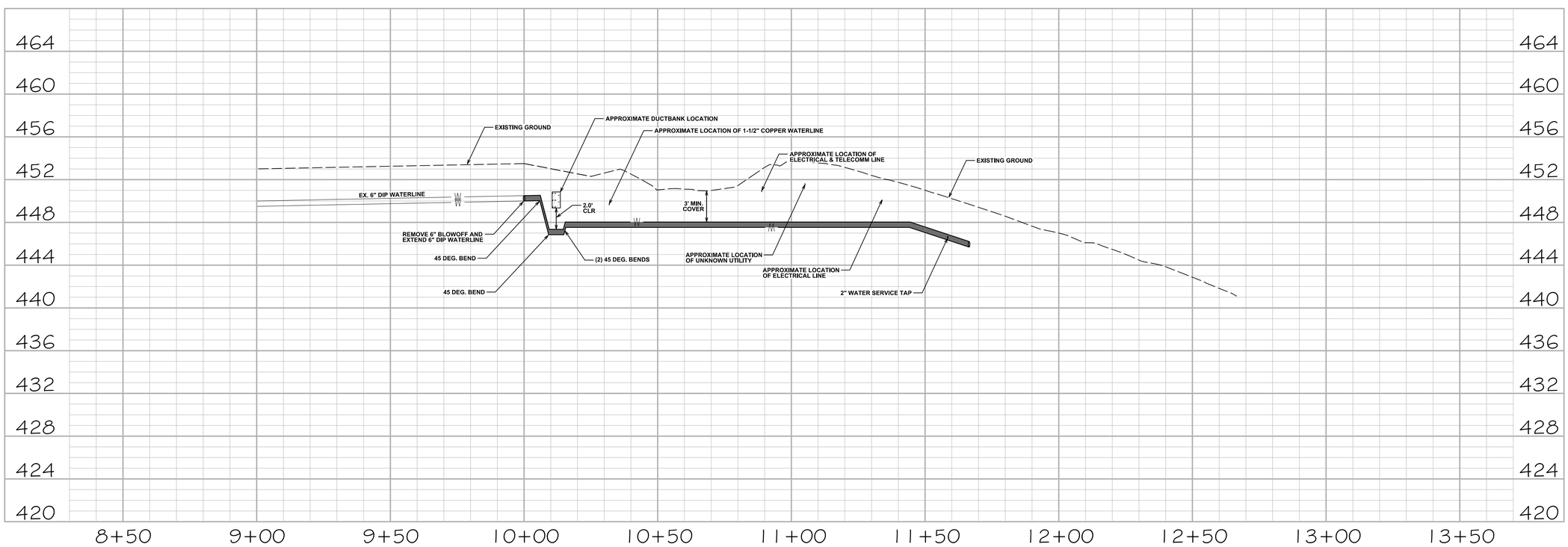

GENERAL NOTES:

1. CONTRACTOR SHALL MAINTAIN A MINIMUM OF 1.50 FOOT VERTICAL CLEAR DISTANCE BETWEEN ALL EXISTING AND PROPOSED UNDERGROUND UTILITIES.

Wagner Architecture, pllc
92 ELAM COURT
NEW HILL, NORTH CAROLINA 27562
TEL. (919) 612.5050

Kramer Engineering Services, pllc
100 S. Camellia St. Chapel Hill, NC 27516
TEL (919)933-3350
email: donna@kesplic.com
Firm license: P-1099

bennett&pless
formerly LHC STRUCTURAL ENGINEERS
5430 Wade Park Blvd, Suite 400
Raleigh, NC 27607
Tel 919 832 5587

Copyright 2022 • Bennett & Pless, Inc.
All Rights Reserved

B & P Job Number 22.08.048

NV5 ENGINEERS AND CONSULTANTS, INC.
3300 REGENCY PARKWAY, STE 100
CARY, NC 27518
P: 919.851.1912 www.NV5.com
NC License # F-1333
formerly CALVX Engineers • Consultants

NORTH CAROLINA PROFESSIONAL SEAL 22514 ENGINEER MICHAEL D. ALLEN
5/18/23

PREPARED FOR
NORTH CAROLINA STATE UNIVERSITY
COLLEGE OF VETERINARY MEDICINE

TRANSLATIONAL RESEARCH FACILITY

revisions

building number

cadd file number

drawn by DFB

checked by MDA

date Issued for Construction 05/18/2023

project number
NCSU CODE: 42124
ITEM: 305
WA 202207
SCO#: 21-24030-01A

C-303A

WATER PROFILE ALTERNATE 08

sheet number: revision number:

"ALL CONSTRUCTION TO BE IN ACCORDANCE WITH ALL CITY OF RALEIGH AND / OR NCDOT STANDARDS AND SPECIFICATIONS"

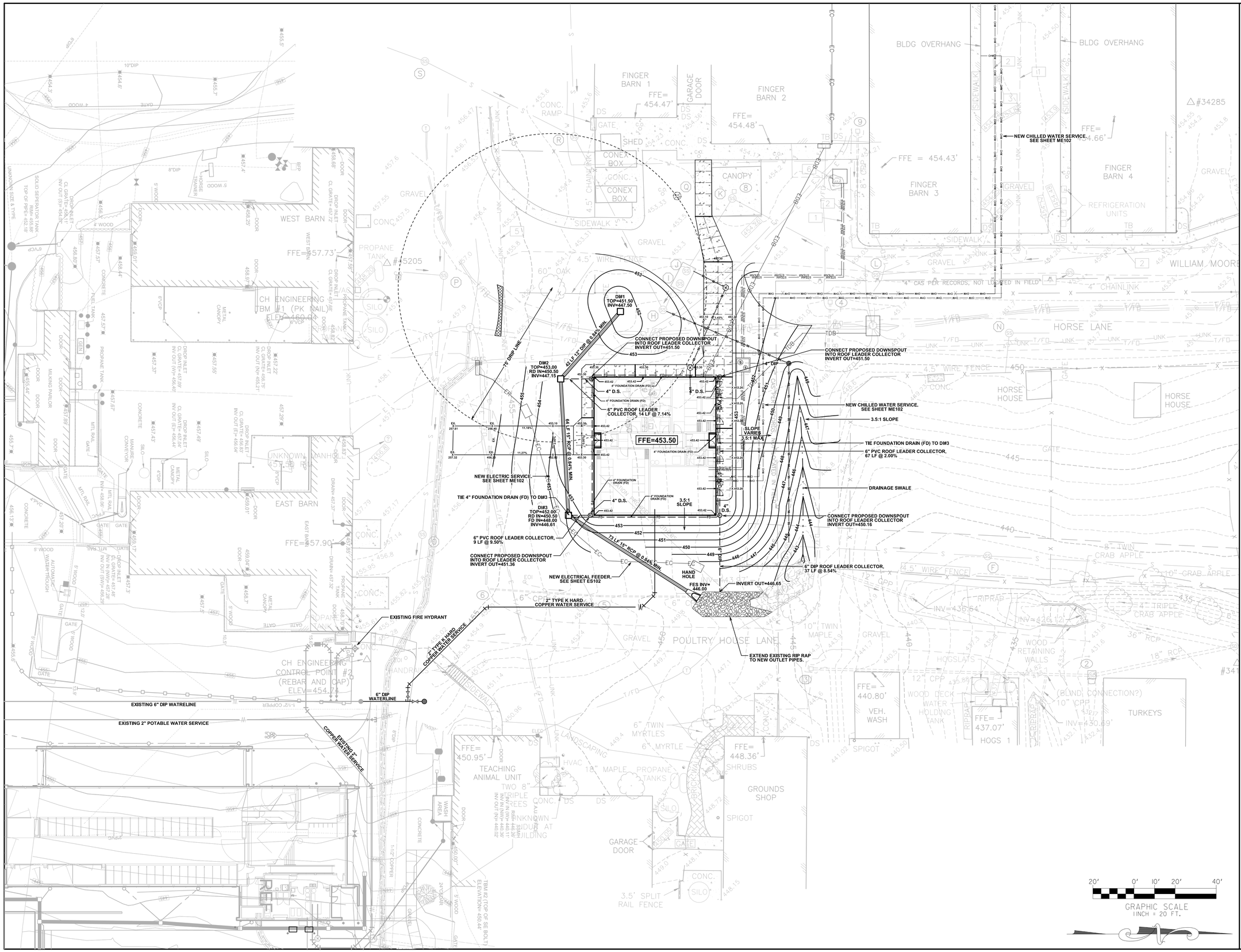

Wagner Architecture, pllc
92 ELAM COURT
NEW HILL, NORTH CAROLINA 27562
TEL. (919) 612.5050

Kramer Engineering Services, pllc
100 S. Camellia St. Chapel Hill, NC 27516
TEL (919)933-3350
email: donna@kesplic.com
Firm license: P-1099

bennett&pless
formerly LHC STRUCTURAL ENGINEERS
5430 Wade Park Blvd, Suite 400
Raleigh, NC 27607
Tel 919 832 5587

Copyright 2022 • Bennett & Pless, Inc.
All Rights Reserved

B & P Job Number 22.08.048

NV5 ENGINEERS AND CONSULTANTS, INC.
3300 REGENCY PARKWAY, STE 100
CARY, NC 27518
P: 919.851.1912 www.NV5.com
NC License # F-1333
formerly CALYX Engineers • Consultants

NORTH CAROLINA PROFESSIONAL SEAL 22514 ENGINEER MICHAEL D. ALLEN
5/18/23

PREPARED FOR
NORTH CAROLINA STATE UNIVERSITY
COLLEGE OF VETERINARY MEDICINE

TRANSLATIONAL RESEARCH FACILITY

revisions

building number

cadd file number

drawn by DFB

checked by MDA

date Issued for Construction 05/18/2023

project number
NCSU CODE: 42124
ITEM: 305
WA 202207
SCO#: 21-24030-01A

C-400

GRADING & DRAINAGE PLAN

sheet number: revision number:

"ALL CONSTRUCTION TO BE IN ACCORDANCE WITH ALL CITY OF RALEIGH AND / OR NCDOT STANDARDS AND SPECIFICATIONS"

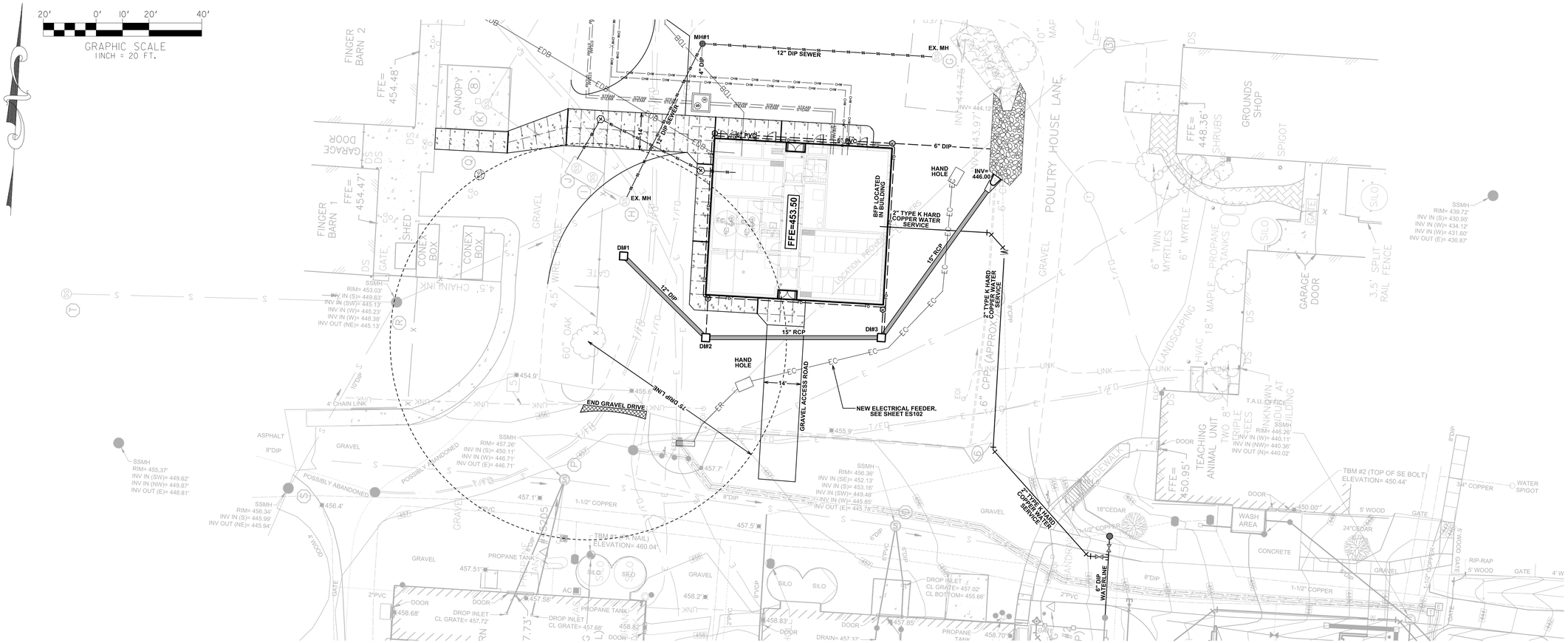

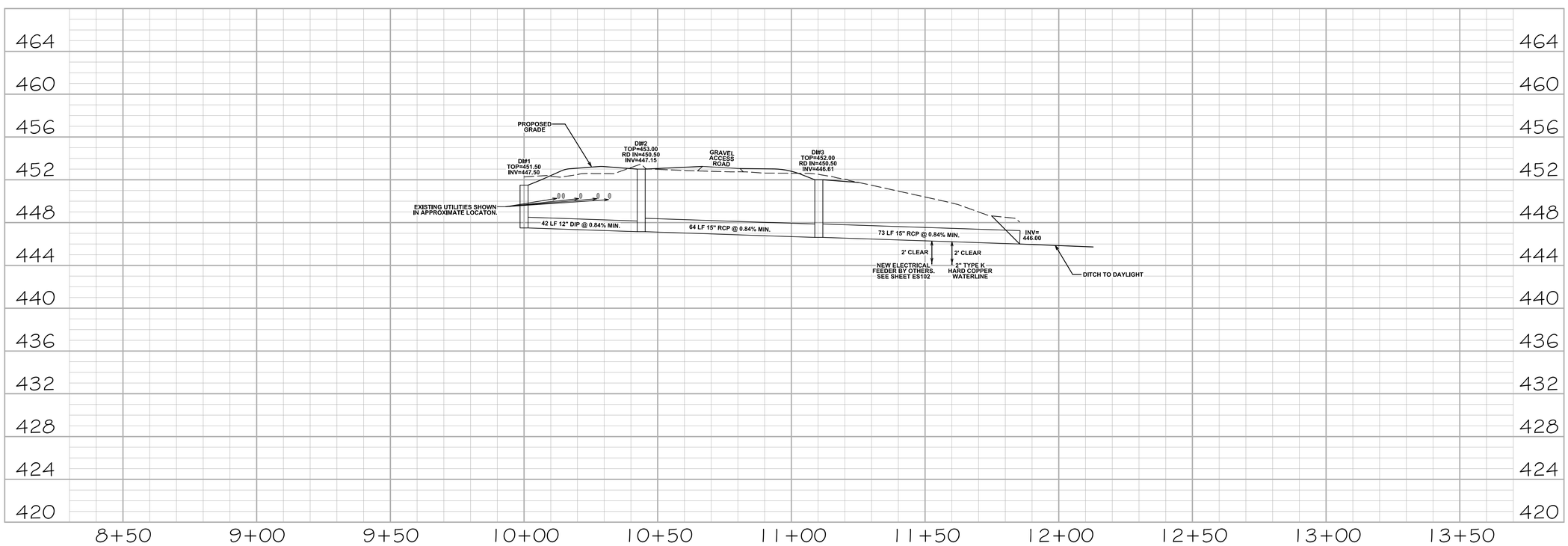

Wagner Architecture, pllc
92 ELAM COURT
NEW HILL, NORTH CAROLINA 27562
TEL. (919) 612.5050

Kramer Engineering Services, pllc
100 S. Camellia St. Chapel Hill, NC 27516
TEL (919)933-3350
email: donna@kesplic.com
Firm license: P-1099

bennett&pless
formerly LHC STRUCTURAL ENGINEERS
5430 Wade Park Blvd, Suite 400
Raleigh, NC 27607
Tel 919 832 5587

Copyright 2022 • Bennett & Pless, Inc.
All Rights Reserved

B & P Job Number 22.08.048

NV5
NV5 ENGINEERS AND CONSULTANTS, INC.
3300 REGENCY PARKWAY, STE 100
CARY, NC 27518
P: 919.851.1912 www.NV5.com
NC License # F-1333
formerly OLVX Engineers • Consultants

NORTH CAROLINA PROFESSIONAL SEAL 22514 ENGINEER MICHAEL D. ALLEN
5/18/23

PREPARED FOR
NORTH CAROLINA STATE UNIVERSITY
COLLEGE OF VETERINARY MEDICINE

TRANSLATIONAL RESEARCH FACILITY

revisions

building number

cadd file number

drawn by DFB

checked by MDA

date Issued for Construction 05/18/2023

project number
NCSU CODE: 42124
ITEM: 305
WA 202207
SCO#: 21-24030-01A

C-401

STORM DRAIN PROFILE

sheet number: revision number:

"ALL CONSTRUCTION TO BE IN ACCORDANCE WITH ALL CITY OF RALEIGH AND / OR NCDOT STANDARDS AND SPECIFICATIONS"

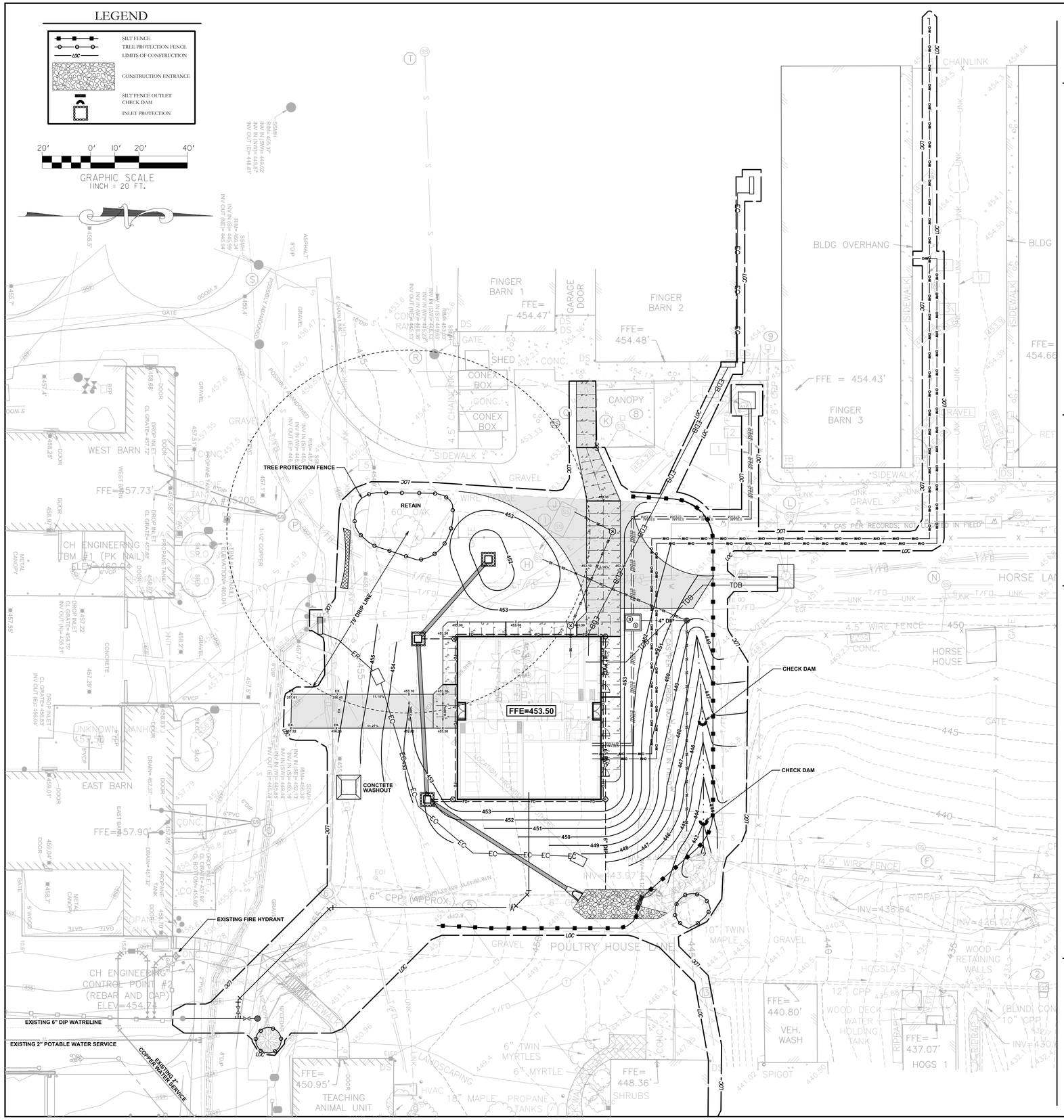

GROUND STABILIZATION:

A.SOIL STABILIZATION SHALL BE ACHIEVED ON ANY AREA OF A SITE WHERE LAND-DISTURBING ACTIVITIES HAVE TEMPORARILY OR PERMANENTLY CEASED ACCORDING TO THE FOLLOWING SCHEDULE:

a.ALL PERIMETER DIKES, SWALES, DITCHES, PERIMETER SLOPES AND ALL SLOPES STEEPER THAN 3 HORIZONTAL TO 1 VERTICAL (3:1) SHALL BE PROVIDED TEMPORARY OR PERMANENT STABILIZATION WITH GROUND COVER AS SOON AS PRACTICABLE BUT IN ANY EVENT WITHIN 7 CALENDAR DAYS FROM THE LAST LAND-DISTURBING ACTIVITY.

b.ALL OTHER DISTURBED AREAS SHALL BE PROVIDED TEMPORARY OR PERMANENT STABILIZATION WITH GROUND COVER AS SOON AS PRACTICABLE BUT IN ANY EVENT WITHIN 14 CALENDAR DAYS FROM THE LAST LAND-DISTURBING ACTIVITY.

GENERAL EROSION CONTROL NOTES

1.ALL CONSTRUCTION MUST CONFORM TO THE UNDERGROUND UTILITY PROTECTION ACT. BEFORE YOU DIG, CONTACT THE NC ONE-CALL CENTER AT 1-800-662-4949

2.ALL EROSION CONTROL DEVICES AND MEASURES SHALL BE INSTALLED AND MAINTAINED IN ACCORDANCE WITH THE CITY OF RALEIGH AND NCDENR STANDARDS AND SPECIFICATIONS. PLAN REVIEW DISTURBED AREA = 0.90 AC

3.PRESERVATION OF TREES (PROTECTED BY TREE PRESERVATION FENCE - TPF) WILL BE RE-EVALUATED AFTER SURROUNDING AREAS ARE CLEARED, BUT PRIOR TO COMPLETION OF CLEARING OPERATION.

4.SILT FENCE INSTALLED SHALL REMAIN IN PLACE UNTIL COMPLETION OF CONSTRUCTION UNLESS OTHERWISE NOTED.

5.TEMPORARY DIVERSION DITCHES TO REMAIN IN PLACE UNTIL SITE HAS BEEN STABLILIZED WHERE FEASIBLE.

6.INLET PROTECTION SHALL BE PROVIDED AT ALL EXISTING AND PROPOSED CURB INLETS, YARD INLETS AND AREA DRAINS LOCATED WITHIN THE LIMITS OF CONSTRUCTION.

7.ALL DITCHES SHALL BE PROTECTED WITH A JUTE MATTING NET IF EROSION OCCURS IN THE DITCH SECTION.

8.CONTRACTOR TO DIVERT SEDIMENT LADEN WATER FROM STORMWATER OUTLETS INTO ADJACENT SEDIMENT BASIN BY LEAVING OFF SECTIONS OF PIPE, UNTIL UPSTREAM SITE HAS BEEN STABILIZED, AND UNTIL OTHERWISE INSTRUCTED BY ENVIRONMENTAL ENGINEER.

9. ALL SPOIL AREAS TO HAVE SILT FENCE ON LOW SIDE OF SLOPES.

10. THE SEDIMENT BASIN OUTLET PIPE SHOULD BE DIRECTED TO THE SILT FENCE OUTLET STRUCTURE DIRECTLY BEHIND THE BASIN WEIR.

11. ANY DEWATERING OF THE SEDIMENT BASIN IS TO BE DONE THOUGH A SILT BAG.

12. CONTRACTOR TO INSTALL ADDITIONAL MEASURES AS NECESSARY AND AS FIELD CONDITIONS WARRANT IN ORDER TO PREVENT SEDIMENT FROM LEAVING THE SITE.

13. ALL TEMPORARY DIVERSION DITCHES TO BE LINED WITH A STRAW LINER OR IF LESS THAN 2% SLOPE, SEED AND STRAW MAY BE USED.

14. TEMPORARY DIVERSIONS SHOULD NOT BE CONSTRUCTED UNTIL SEDIMENT BASINS HAVE BEEN CONSTRUCTED.

15. PROVIDE A RAIN GAUGE ON SITE TO CHECK FOR RAINFALL EVENTS OF 0.5 INCHES OR GREATER. INSPECT ALL EROSION CONTROL DEVICES FOR MAINTENANCE ISSUES AFTER THESE RAIN EVENTS.

16. INSTALL ROCK CHECK DAMS EVERY 100 LF OF DIVERSION DITCH OR AS NEEDED.

17.AS SITE IS ROUGH GRADED, CONTINUE TO MAINTAIN DIVERSIONS AND BRING THEM UP TO GRADE TO CONTINUE FLOW TO THE SEDIMENT BASINS.

18 .ALL PERMANENT SLOPES STEEPER THAN 3;1 SHALL BE LINED WITH NORTH AMERICAN GREEN SC150 EROSION CONTROL BLANKET OR EQUAL.

19. ALL DISTURBED AREAS SHALL BE SEEDED AND MULCHED WITHIN 21 DAYS OF COMPLETION OF ANY PHASE OF GRADING. PERMANENT GROUND COVER FOR ALL DISTURBED AREAS SHALL BE INSTALLED WITHIN 15 WORKING DAYS OR 90 CALENDAR DAYS (WHICHEVER IS SHORTER) FOLLOWING COMPLETION OF CONSTRUCTION OR DEVELOPMENT.

20. THE CONCRETE WASHOUT PIT SHALL REMAIN A MINIMUM OF 50 FEET AWAY FROM ANY INLET IF THE INLETS ARE NOT COMPLETELY CLOSED OFF DURING USE OF CONCRETE WASHOUT AREA.

21. AN APPROVED COPY OF THE E&SC PLAN WITH PLACARD AND APPROVAL LETTER AND A COPY OF THE NPDES PERMIT WITH A MINIMUM OF 30 DAYS OF SELF-INSPECTION REPORTS ARE TO BE KEPT ON SITE UNTIL PROJECT CLOSURE.

PHASE I CONSTRUCTION SEQUENCE

NOTE: EROSION AND SEDIMENT CONTROL (E&SC) PERMIT AND A CERTIFICATE OF COVERAGE (COC) MUST BE OBTAINED BEFORE ANY LAND DISTURBING ACTIVITIES OCCUR.

NOTE: E&SC MEASURES ARE TO BE INSTALLED PRIOR TO ANY DEMOLITION ACTIVITIES.

NOTE: ALL CUT OR FILL, AND BASIN SLOPES ARE TO BE TRACKED.

NOTE: ALL SLOPES WILL BE MATTED WITH A SUITABLE RECP AFTER SEEDING.

NOTE: ANY DEWATERING OF BASINS OR TRENCHES MUST BE CONSTANTLY MONITORED.

1. CONTACT NC DEQ LQS AT 919-791-4200 TO SCHEDULE PRE-CONSTRUCTION MEETING AT LEAST 48 HOURS PRIOR TO PROJECT ACTIVATION.

2. ATTEND PRE-CONSTRUCTION CONFERENCE.

3. INSTALL CONSTRUCTION ENTRANCE, SILT FENCE, AND SILT FENCE OUTLETS CLEARING ONLY AS NECESSARY TO INSTALL THESE DEVICES.

4. INSTALL SKIMMER SEDIMENT BASIN ACCORDING TO PLAN. SEED, MULCH AND ANCHOR BERM AND SOILS AROUND AND BELOW BASIN UPON CONSTRUCTION.

5. CONTACT NC DEMLR (919-791-4200) FOR INSPECTION OF THESE MEASURES. UPON APPROVAL, INSTALL TEMPORARY DIVERSION DITCHES AND THE REMAINING EROSION CONTROL MEASURES AS SHOWN ON THE PLAN.

6. DEMOLITION ACTIVITIES MAY BEGIN ONCE THE DIVERSION DITCH HAS BEEN INSTALLED.

7. CONTACT NC DEMLR INSPECTORS (919-791-4200). ONCE THE INSPECTORS HAVE APPROVED, PROCEED TO PHASE II EROSION CONTROL SEQUENCE.

MAINTENANCE SCHEDULE FOR EROSION CONTROL DEVICES

SEDIMENT BASINS/TRAPS
ALL SEDIMENT BASINS/TRAPS SHALL BE CHECKED FOR STABILITY AND OPERATION FOLLOWING EVERY RUNOFF-PRODUCING RAINFALL IN EXCESS OF 0.5" BUT IN NO CASE LESS THAN ONCE EVERY WEEK. ANY NECESSARY REPAIRS SHALL BE MADE IMMEDIATELY TO MAINTAIN ALL MEASURES AS DESIGNED. SEDIMENT BASINS/TRAPS SHALL BE CLEANED OF SEDIMENT WHEN THE LEVEL OF SEDIMENT REACHES 2.0 FT BELOW THE SPILLWAY ELEVATION. ANY STONE SHALL BE CLEANED OR REPLACED WHEN THE SEDIMENT POOL NO LONGER DRAINS PROPERLY.

EMERGENCY SPILLWAY
THE EMERGENCY SPILLWAYS SHALL BE INSPECTED ONCE A WEEK AND AFTER EACH RAINFALL IN EXCESS OF 0.5". IN THE EVENT THAT THE RIP RAP BECOMES CLOGGED WITH SEDIMENT, THE RIP RAP AND FILTER FABRIC SHALL BE REPLACED. ANY TEARS OR PUNCTURES IN THE FILTER FACBRIC WILL REQUIRE REPLACEMENT OF THE FABRIC AND ASSOCIATED RIP RAP.

BAFFLES
INSPECT AT LEAST ONCE A WEEK AND FOLLOWING EVERY RUNOFF PRODUCING RAINFALL IN EXCESS OF 0.5". MAKE ANY REPAIRS IMMEDIATELY. REPAIR OR REPLACE ANY BAFFLE COLLAPSE (POROUS FABRIC, POST) OR TEAR PROMPTLY.

SKIMMER
THE SKIMMER SHALL BE MAINTAINED FREE FROM MUD AND IN ACCORDANCE WITH THE MANUFACTURER'S RECOMMENDATIONS.

INLET PROTECTION
INSPECT INLET PROTECTION AT LEAST ONCE A WEEK AND AFTER EACH RAINFALL IN EXCESS OF 0.5". SEDIMENT SHALL BE REMOVED FROM THE INLET PROTECTION DEVICES WHEN STORAGE CAPACITY HAS BEEN APPROXIMATELY 50% FILLED. STONE SHALL BE CLEANED OR REPLACED WHEN THE SEDIMENT POOL NO LONGER DRAINS PROPERLY. ANY DAMAGED POSTS, SILT FENCE OR WIRE MESH FABRIC SHALL BE REPAIRED OR REPLACED IMMEDIATELY.

DISSPATER PAD
THE DISSIPATER PADS SHALL BE INSPECTED ONCE A WEEK AND AFTER EACH RAINFALL IN EXCESS OF 0.5". IN THE EVENT THAT THE RIP RAP BECOMES CLOGGED WITH SEDIMENT, BOTH THE RIP RAP AND FILTER FABRIC SHALL BE REPLACED. ANY TEARS OR PUNCTURES IN THE FILTER FACBRIC WILL REQUIRE REPLACEMENT OF THE FABRIC AND ASSOCIATED RIP RAP.

SILT FENCE
INSPECT SILT FENCE AT LEAST ONCE A WEEK AND AFTER EACH RAINFALL IN EXCESS OF 0.5". MAKE ANY REPAIRS IMMEDIATELY. REPAIR OR REPLACE ANY FENCE COLLAPSE (WOVEN WIRE FABRIC, SILT FENCE FABRIC, POST) OR TEAR PROMPTLY. SEDIMENT SHALL BE REMOVED FROM BEHIND THE SILT FENCE WHEN IT REACHES A DEPTH OF 1.0 FT. REMOVE SEDIMENT DEPOSITS AS NECESSARY TO PROVIDE ADEQUATE STORAGE VOLUME FOR THE NEXT RAIN EVENT.

SILT FENCE OUTLETS
SEDIMENT SHALL BE REMOVED FROM SILT FENCE OUTLETS AND STONE SHALL BE CLEANED OR REPLACED WHEN THE SEDIMENT POOL NO LONGER DRAINS PROPERLY.

TEMPORARY DIVERSION DITCHES
SHALL BE INSPECTED ONCE A WEEK AND AFTER EVERY RAINFALL EVENT IN EXCESS OF 0.5". IMMEDIATELY REMOVE SEDIMENT FROM THE FLOW AREA AND REPAIR THE DIVERSION RIDGE. CAREFULLY CHECK OUTLETS AND MAKE TIMELY REPAIRS AS NEEDED,

CHECK DAMS
SHALL BE INSTPECTED ONCE A WEEK AND AFTER EACH RAINFALL IN EXCESS OF 0.5". REMOVE SEDIMENT AND RESTORE ORIGINAL VOLUME WHEN SEDIMENT ACCULATES TO 1/2 OF THE DESIGN VOLUME.

EROSION CONTROL MAT
REPAIR AREAS OF DAMAGE OR FAILURE OF GRASS STAND ESTABLISHMENT. ANY TEARS SHALL BE REPAIRED IMMEDIATELY AND/OR THAT SECTION OF THE LINER SHALL BE REPLACED AND RE-ANCHORED. EROSION CONTROL MAT SHALL BE MAINTAINED UNTIL SUCH TIME THAT PERMANENT VEGEATION HAS BEEN ESTABLISHED.

CONSTRUCTION ENTRANCE
INSPECT DAILY AND AFTER EVERY RAINFALL EVENT. IN THE EVENT THAT THE RIP RAP BECOMES CLOGGED WITH SEDIMENT, THE RIP RAP AND FILTER FABRIC SHALL BE REPLACED. ANY TEARS OR PUNCTURES IN THE FILTER FACBRIC WILL REQUIRE REPLACEMENT OF THE FABRIC AND ASSOCIATED RIP RAP. UNDER NO CIRCUMSTANCES SHALL CONSTRUCTION TRAFFIC ENTER/EXIT THE PROJECT SITE WITHOUT A PROPERLY FUNCTIONING CONSTRUCTION ENTRANCE. THE CONTRACTOR SHALL MAKE IMMEDIATE REPAIRS TO ENSURE THAT NO SEDIMENT IS TRACKED OFF OF THE PROJECT SITE AND INTO THE PUBLIC ROADWAY.

STABILIZATION
ALL SEEDED AREAS SHALL BE FERTILIZED, RESEEDED AS NECESSARY, AND MULCHED ACCORDING TO SPECIFICATIONS IN THE TEMPORARY AND PERMANENT SEEDING SCHEDULES TO MAINTAIN VEGETATIVE COVER.

DISTURBED AREA = 0.90 ACRES

Wagner Architecture, pllc
92 ELAM COURT
NEW HILL, NORTH CAROLINA 27562
TEL. (919) 612.5050

Kramer Engineering Services, pllc
100 S. Camellia St. Chapel Hill, NC 27516
TEL (919)933-3350
email: donna@kesplic.com
Firm license: P-1099

bennett&pless
formerly LHC STRUCTURAL ENGINEERS
5430 Wade Park Blvd, Suite 400
Raleigh, NC 27607
Tel 919 832 5587

Copyright 2022 • **Bennett & Pless, Inc.**
All Rights Reserved

B & P Job Number 22.08.048

NV5 ENGINEERS AND CONSULTANTS, INC.
3300 REGENCY PARKWAY, STE 100
CARY, NC 27518
P: 919.851.1912 www.NV5.com
NC License # F-1333
formerly OLIVI Engineers • Consultants

NORTH CAROLINA PROFESSIONAL SEAL 22514 ENGINEER MICHAEL D. ALLEN
5/18/23

PREPARED FOR
NORTH CAROLINA STATE UNIVERSITY
COLLEGE OF VETERINARY MEDICINE

TRANSLATIONAL RESEARCH FACILITY

revisions

building number

cadd file number

drawn by DFB

checked by MDA

date Issued for Construction 05/18/2023

project number
NCSU CODE: 42124
ITEM: 305
WA 202207
SCO#: 21-24030-01A

C-402

EROSION CONTROL PLAN

sheet number: revision number:

"ALL CONSTRUCTION TO BE IN ACCORDANCE WITH ALL CITY OF RALEIGH AND / OR NCDOT STANDARDS AND SPECIFICATIONS"

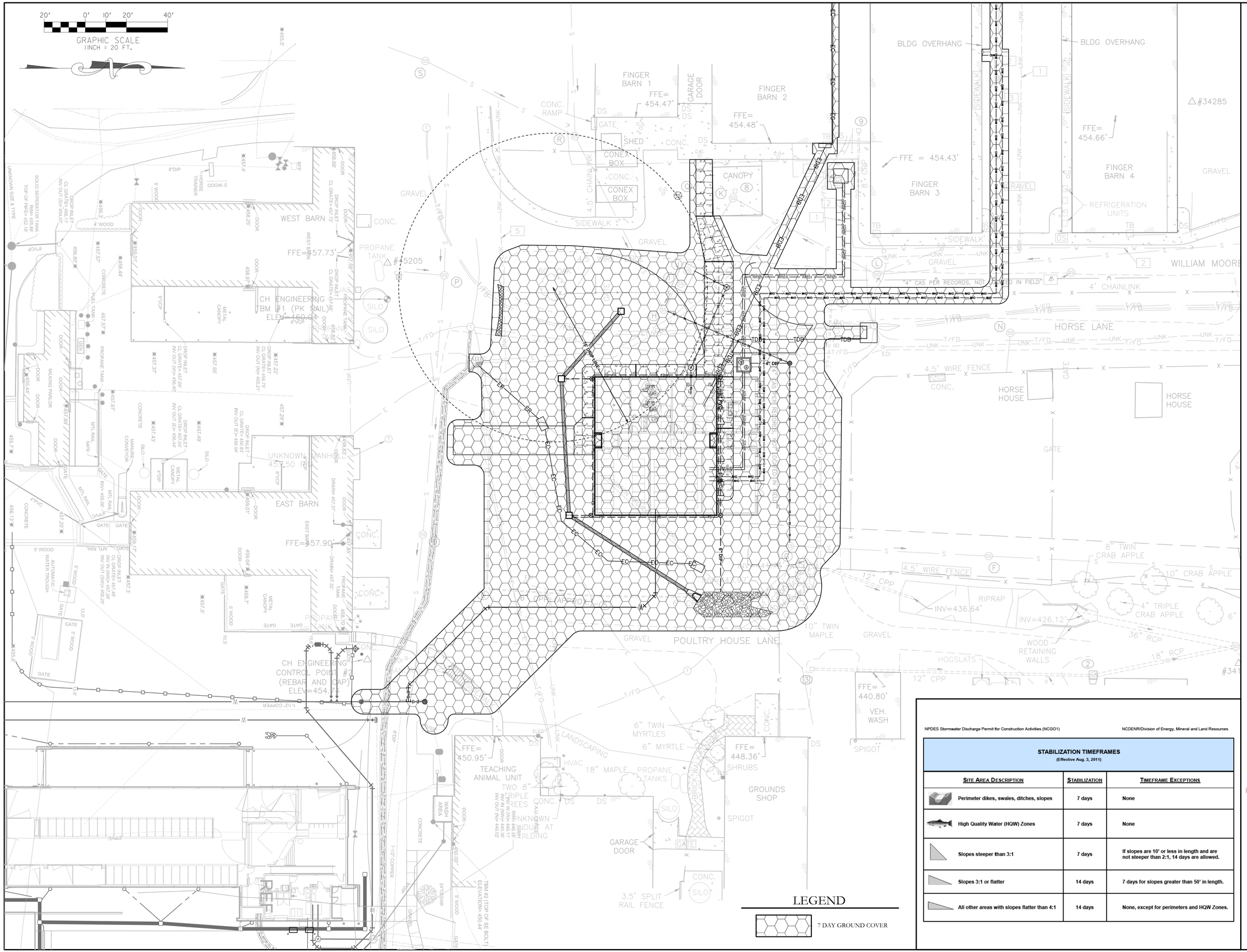

LEGEND

7 DAY GROUND COVER

NPDES Stormwater Discharge Permit for Construction Activities (NCGO1)

NCDENR/Division of Energy, Mineral and Land Resources

STABILIZATION TIMEFRAMES
(Effective Aug. 3, 2011)

Site Area Description	Stabilization	Timeframe Exceptions
Perimeter dikes, swales, ditches, slopes	7 days	None
High Quality Water (HQW) Zones	7 days	None
Slopes steeper than 3:1	7 days	If slopes are 10' or less in length and are not steeper than 2:1, 14 days are allowed.
Slopes 3:1 or flatter	14 days	7 days for slopes greater than 50' in length.
All other areas with slopes flatter than 4:1	14 days	None, except for perimeters and HQW Zones.

Wagner Architecture, pllc
92 ELAM COURT
NEW HILL, NORTH CAROLINA 27562
TEL. (919) 612.5050

Kramer Engineering Services, pllc
100 S. Camellia St. Chapel Hill, NC 27516
TEL (919)933-3350
email: donna@kesplic.com
Firm license: P-1099

bennett&pless
formerly LHC STRUCTURAL ENGINEERS
5430 Wade Park Blvd, Suite 400
Raleigh, NC 27607
Tel 919 832 5587

Copyright 2022 • **Bennett & Pless, Inc.**
All Rights Reserved

B & P Job Number 22.08.048

NV5 ENGINEERS AND CONSULTANTS, INC.
3300 REGENCY PARKWAY, STE 100
CARY, NC 27518
P: 919.851.1912 www.NV5.com
NC License # F-1333
formerly DALVA Engineers • Consultants

NORTH CAROLINA PROFESSIONAL SEAL 22514 ENGINEER MICHAEL D. ALLEN
5/18/23

PREPARED FOR
NORTH CAROLINA STATE UNIVERSITY
COLLEGE OF VETERINARY MEDICINE

TRANSLATIONAL RESEARCH FACILITY

revisions

building number

cadd file number

drawn by DFB

checked by MDA

date Issued for Construction 05/18/2023

project number
NCSU CODE: 42124
ITEM: 305
WA 202207
SCO#: 21-24030-01A

C-500

NPDES STABILIZATION PLAN

sheet number: revision number:

GROUND STABILIZATION AND MATERIALS HANDLING PRACTICES FOR COMPLIANCE WITH THE NCG01 CONSTRUCTION GENERAL PERMIT

Implementing the details and specifications on this plan sheet will result in the construction activity being considered compliant with the Ground Stabilization and Materials Handling sections of the NCG01 Construction General Permit (Sections E and F, respectively). The permittee shall comply with the Erosion and Sediment Control plan approved by the delegated authority having jurisdiction. All details and specifications shown on this sheet may not apply depending on site conditions and the delegated authority having jurisdiction.

SECTION E: GROUND STABILIZATION

Required Ground Stabilization Timeframes

Site Area Description	Stabilize within this many calendar days after ceasing land disturbance	Timeframe variations
(a) Perimeter dikes, swales, ditches, and perimeter slopes	7	None
(b) High Quality Water (HQW) Zones	7	None
(c) Slopes steeper than 3:1	7	If slopes are 10' or less in length and are not steeper than 2:1, 14 days are allowed
(d) Slopes 3:1 to 4:1	14	-7 days for slopes greater than 50' in length and with slopes steeper than 4:1 -7 days for perimeter dikes, swales, ditches, perimeter slopes and HQW Zones -10 days for Falls Lake Watershed
(e) Areas with slopes flatter than 4:1	14	-7 days for perimeter dikes, swales, ditches, perimeter slopes and HQW Zones -10 days for Falls Lake Watershed unless there is zero slope

Note: After the permanent cessation of construction activities, any areas with temporary ground stabilization shall be converted to permanent ground stabilization as soon as practicable but in no case longer than 90 calendar days after the last land disturbing activity. Temporary ground stabilization shall be maintained in a manner to render the surface stable against accelerated erosion until permanent ground stabilization is achieved.

GROUND STABILIZATION SPECIFICATION

Stabilize the ground sufficiently so that rain will not dislodge the soil. Use one of the techniques in the table below:

Temporary Stabilization	Permanent Stabilization
• Temporary grass seed covered with straw or other mulches and tackifiers • Hydroseeding • Rolled erosion control products with or without temporary grass seed • Appropriately applied straw or other mulch • Plastic sheeting	• Permanent grass seed covered with straw or other mulches and tackifiers • Geotextile fabrics such as permanent soil reinforcement matting • Hydroseeding • Shrubs or other permanent plantings covered with mulch • Uniform and evenly distributed ground cover sufficient to restrain erosion • Structural methods such as concrete, asphalt or retaining walls • Rolled erosion control products with grass seed

POLYACRYLAMIDES (PAMS) AND FLOCCULANTS

1. Select flocculants that are appropriate for the soils being exposed during construction, selecting from the *NC DWR List of Approved PAMS/Flocculants*.
2. Apply flocculants at or before the inlets to Erosion and Sediment Control Measures.
3. Apply flocculants at the concentrations specified in the *NC DWR List of Approved PAMS/Flocculants* and in accordance with the manufacturer's instructions.
4. Provide ponding area for containment of treated Stormwater before discharging offsite.
5. Store flocculants in leak-proof containers that are kept under storm-resistant cover or surrounded by secondary containment structures.

EQUIPMENT AND VEHICLE MAINTENANCE

1. Maintain vehicles and equipment to prevent discharge of fluids.
2. Provide drip pans under any stored equipment.
3. Identify leaks and repair as soon as feasible, or remove leaking equipment from the project.
4. Collect all spent fluids, store in separate containers and properly dispose as hazardous waste (recycle when possible).
5. Remove leaking vehicles and construction equipment from service until the problem has been corrected.
6. Bring used fuels, lubricants, coolants, hydraulic fluids and other petroleum products to a recycling or disposal center that handles these materials.

LITTER, BUILDING MATERIAL AND LAND CLEARING WASTE

1. Never bury or burn waste. Place litter and debris in approved waste containers.
2. Provide a sufficient number and size of waste containers (e.g dumpster, trash receptacle) on site to contain construction and domestic wastes.
3. Locate waste containers at least 50 feet away from storm drain inlets and surface waters unless no other alternatives are reasonably available.
4. Locate waste containers on areas that do not receive substantial amounts of runoff from upland areas and does not drain directly to a storm drain, stream or wetland.
5. Cover waste containers at the end of each workday and before storm events or provide secondary containment. Repair or replace damaged waste containers.
6. Anchor all lightweight items in waste containers during times of high winds.
7. Empty waste containers as needed to prevent overflow. Clean up immediately if containers overflow.
8. Dispose waste off-site at an approved disposal facility.
9. On business days, clean up and dispose of waste in designated waste containers.

PAINT AND OTHER LIQUID WASTE

1. Do not dump paint and other liquid waste into storm drains, streams or wetlands.
2. Locate paint washouts at least 50 feet away from storm drain inlets and surface waters unless no other alternatives are reasonably available.
3. Contain liquid wastes in a controlled area.
4. Containment must be labeled, sized and placed appropriately for the needs of site.
5. Prevent the discharge of soaps, solvents, detergents and other liquid wastes from construction sites.

PORTABLE TOILETS

1. Install portable toilets on level ground, at least 50 feet away from storm drains, streams or wetlands unless there is no alternative reasonably available. If 50 foot offset is not attainable, provide relocation of portable toilet behind silt fence or place on a gravel pad and surround with sand bags.
2. Provide staking or anchoring of portable toilets during periods of high winds or in high foot traffic areas.
3. Monitor portable toilets for leaking and properly dispose of any leaked material. Utilize a licensed sanitary waste hauler to remove leaking portable toilets and replace with properly operating unit.

EARTHEN STOCKPILE MANAGEMENT

1. Show stockpile locations on plans. Locate earthen-material stockpile areas at least 50 feet away from storm drain inlets, sediment basins, perimeter sediment controls and surface waters unless it can be shown no other alternatives are reasonably available.
2. Protect stockpile with silt fence installed along toe of slope with a minimum offset of five feet from the toe of stockpile.
3. Provide stable stone access point when feasible.
4. Stabilize stockpile within the timeframes provided on this sheet and in accordance with the approved plan and any additional requirements. Soil stabilization is defined as vegetative, physical or chemical coverage techniques that will restrain accelerated erosion on disturbed soils for temporary or permanent control needs.

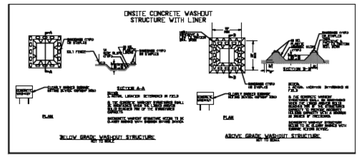

CONCRETE WASHOUTS

1. Do not discharge concrete or cement slurry from the site.
2. Dispose of, or recycle settled, hardened concrete residue in accordance with local and state solid waste regulations and at an approved facility.
3. Manage washout from mortar mixers in accordance with the above item and in addition place the mixer and associated materials on impervious barrier and within lot perimeter silt fence.
4. Install temporary concrete washouts per local requirements, where applicable. If an alternate method or product is to be used, contact your approval authority for review and approval. If local standard details are not available, use one of the two types of temporary concrete washouts provided on this detail.
5. Do not use concrete washouts for dewatering or storing defective curb or sidewalk sections. Stormwater accumulated within the washout may not be pumped into or discharged to the storm drain system or receiving surface waters. Liquid waste must be pumped out and removed from project.
6. Locate washouts at least 50 feet from storm drain inlets and surface waters unless it can be shown that no other alternatives are reasonably available. At a minimum, install protection of storm drain inlet(s) closest to the washout which could receive spills or overflow.
7. Locate washouts in an easily accessible area, on level ground and install a stone entrance pad in front of the washout. Additional controls may be required by the approving authority.
8. Install at least one sign directing concrete trucks to the washout within the project limits. Post signage on the washout itself to identify this location.
9. Remove leavings from the washout when at approximately 75% capacity to limit overflow events. Replace the tarp, sand bags or other temporary structural components when no longer functional. When utilizing alternative or proprietary products, follow manufacturer's instructions.
10. At the completion of the concrete work, remove remaining leavings and dispose of in an approved disposal facility. Fill pit, if applicable, and stabilize any disturbance caused by removal of washout.

HERBICIDES, PESTICIDES AND RODENTICIDES

1. Store and apply herbicides, pesticides and rodenticides in accordance with label restrictions.
2. Store herbicides, pesticides and rodenticides in their original containers with the label, which lists directions for use, ingredients and first aid steps in case of accidental poisoning.
3. Do not store herbicides, pesticides and rodenticides in areas where flooding is possible or where they may spill or leak into wells, stormwater drains, ground water or surface water. If a spill occurs, clean area immediately.
4. Do not stockpile these materials onsite.

HAZARDOUS AND TOXIC WASTE

1. Create designated hazardous waste collection areas on-site.
2. Place hazardous waste containers under cover or in secondary containment.
3. Do not store hazardous chemicals, drums or bagged materials directly on the ground.

NCG01 GROUND STABILIZATION AND MATERIALS HANDLING

EFFECTIVE: 04/01/19

PART III
SELF-INSPECTION, RECORDKEEPING AND REPORTING

SECTION A: SELF-INSPECTION

Self-inspections are required during normal business hours in accordance with the table below. When adverse weather or site conditions would cause the safety of the inspection personnel to be in jeopardy, the inspection may be delayed until the next business day on which it is safe to perform the inspection. In addition, when a storm event of equal to or greater than 1.0 inch occurs outside of normal business hours, the self-inspection shall be performed upon the commencement of the next business day. Any time when inspections were delayed shall be noted in the Inspection Record.

Inspect	Frequency (during normal business hours)	Inspection records must include:
(1) Rain gauge maintained in good working order	Daily	Daily rainfall amounts. If no daily rain gauge observations are made during weekend or holiday periods, and no individual day rainfall information is available, record the cumulative rain measurement for those un-attended days (and this will determine if a site inspection is needed). Days on which no rainfall occurred shall be recorded as "zero." The permittee may use another rain monitoring device approved by the Division.
(2) E&SC Measures	At least once per 7 calendar days and within 24 hours of a rain event ≥ 1.0 inch in 24 hours	1. Identification of the measures inspected, 2. Date and time of the inspection, 3. Name of the person performing the inspection, 4. Indication of whether the measures were operating properly, 5. Description of maintenance needs for the measure, 6. Description, evidence, and date of corrective actions taken.
(3) Stormwater discharge outfalls (SDOs)	At least once per 7 calendar days and within 24 hours of a rain event ≥ 1.0 inch in 24 hours	1. Identification of the discharge outfalls inspected, 2. Date and time of the inspection, 3. Name of the person performing the inspection, 4. Evidence of indicators of stormwater pollution such as oil sheen, floating or suspended solids or discoloration, 5. Indication of visible sediment leaving the site, 6. Description, evidence, and date of corrective actions taken.
(4) Perimeter of site	At least once per 7 calendar days and within 24 hours of a rain event ≥ 1.0 inch in 24 hours	If visible sedimentation is found outside site limits, then a record of the following shall be made: 1. Actions taken to clean up or stabilize the sediment that has left the site limits, 2. Description, evidence, and date of corrective actions taken, and 3. An explanation as to the actions taken to control future releases.
(5) Streams or wetlands onsite or offsite (where accessible)	At least once per 7 calendar days and within 24 hours of a rain event ≥ 1.0 inch in 24 hours	If the stream or wetland has increased visible sedimentation or a stream has visible increased turbidity from the construction activity, then a record of the following shall be made: 1. Description, evidence and date of corrective actions taken, and 2. Records of the required reports to the appropriate Division Regional Office per Part III, Section C, Item (7)(a) of this permit.
(6) Ground stabilization measures	After each phase of grading	1. The phase of grading (installation of perimeter E&SC measures, clearing and grubbing, installation of storm drainage facilities, completion of all land disturbing activity, construction or redevelopment, permanent ground cover). 2. Documentation that the required ground stabilization measures have been provided within the required timeframe or an assurance that they will be provided as soon as possible.

NOTE: The rain inspection resets the required 7 calendar day inspection requirement.

PART III
SELF-INSPECTION, RECORDKEEPING AND REPORTING

SECTION B: RECORDKEEPING

1. E&SC Plan Documentation

The approved E&SC plan as well as any approved deviation shall be kept on the site. The approved E&SC plan must be kept up-to-date throughout the coverage under this permit. The following items pertaining to the E&SC plan shall be kept on site and available for inspection at all times during normal business hours.

Item to Document	Documentation Requirements
(a) Each E&SC measure has been installed and does not significantly deviate from the locations, dimensions and relative elevations shown on the approved E&SC plan.	Initial and date each E&SC measure on a copy of the approved E&SC plan or complete, date and sign an inspection report that lists each E&SC measure shown on the approved E&SC plan. This documentation is required upon the initial installation of the E&SC measures or if the E&SC measures are modified after initial installation.
(b) A phase of grading has been completed.	Initial and date a copy of the approved E&SC plan or complete, date and sign an inspection report to indicate completion of the construction phase.
(c) Ground cover is located and installed in accordance with the approved E&SC plan.	Initial and date a copy of the approved E&SC plan or complete, date and sign an inspection report to indicate compliance with approved ground cover specifications.
(d) The maintenance and repair requirements for all E&SC measures have been performed.	Complete, date and sign an inspection report.
(e) Corrective actions have been taken to E&SC measures.	Initial and date a copy of the approved E&SC plan or complete, date and sign an inspection report to indicate the completion of the corrective action.

2. Additional Documentation to be Kept on Site

In addition to the E&SC plan documents above, the following items shall be kept on the site and available for inspectors at all times during normal business hours, unless the Division provides a site-specific exemption based on unique site conditions that make this requirement not practical:

(a) This General Permit as well as the Certificate of Coverage, after it is received.

(b) Records of inspections made during the previous twelve months. The permittee shall record the required observations on the Inspection Record Form provided by the Division or a similar inspection form that includes all the required elements. Use of electronically-available records in lieu of the required paper copies will be allowed if shown to provide equal access and utility as the hard-copy records.

3. Documentation to be Retained for Three Years

All data used to complete the e-NOI and all inspection records shall be maintained for a period of three years after project completion and made available upon request. [40 CFR 122.41]

PART III
SELF-INSPECTION, RECORDKEEPING AND REPORTING

SECTION C: REPORTING

1. Occurrences that Must be Reported

Permittees shall report the following occurrences:

(a) Visible sediment deposition in a stream or wetland.

(b) Oil spills if:
- They are 25 gallons or more,
- They are less than 25 gallons but cannot be cleaned up within 24 hours,
- They cause sheen on surface waters (regardless of volume), or
- They are within 100 feet of surface waters (regardless of volume).

(c) Releases of hazardous substances in excess of reportable quantities under Section 311 of the Clean Water Act (Ref: 40 CFR 110.3 and 40 CFR 117.3) or Section 102 of CERCLA (Ref: 40 CFR 302.4) or G.S. 143-215.85.

(d) Anticipated bypasses and unanticipated bypasses.

(e) Noncompliance with the conditions of this permit that may endanger health or the environment.

2. Reporting Timeframes and Other Requirements

After a permittee becomes aware of an occurrence that must be reported, he shall contact the appropriate Division regional office within the timeframes and in accordance with the other requirements listed below. Occurrences outside normal business hours may also be reported to the Department's Environmental Emergency Center personnel at (800) 858-0368.

Occurrence	Reporting Timeframes (After Discovery) and Other Requirements
(a) Visible sediment deposition in a stream or wetland	• ***Within 24 hours***, an oral or electronic notification. • ***Within 7 calendar days***, a report that contains a description of the sediment and actions taken to address the cause of the deposition. Division staff may waive the requirement for a written report on a case-by-case basis. • If the stream is named on the NC 303(d) list as impaired for sediment-related causes, the permittee may be required to perform additional monitoring, inspections or apply more stringent practices if staff determine that additional requirements are needed to assure compliance with the federal or state impaired-waters conditions.
(b) Oil spills and release of hazardous substances per Item (1)(b)-(c) above	• ***Within 24 hours***, an oral or electronic notification. The notification shall include information about the date, time, nature, volume and location of the spill or release.
(c) Anticipated bypasses [40 CFR 122.41(m)(3)]	• ***A report at least ten days before the date of the bypass, if possible***. The report shall include an evaluation of the anticipated quality and effect of the bypass.
(d) Unanticipated bypasses [40 CFR 122.41(m)(3)]	• ***Within 24 hours***, an oral or electronic notification. • ***Within 7 calendar days***, a report that includes an evaluation of the quality and effect of the bypass.
(e) Noncompliance with the conditions of this permit that may endanger health or the environment [40 CFR 122.41(l)(7)]	• ***Within 24 hours***, an oral or electronic notification. • ***Within 7 calendar days***, a report that contains a description of the noncompliance, and its causes; the period of noncompliance, including exact dates and times, and if the noncompliance has not been corrected, the anticipated time noncompliance is expected to continue; and steps taken or planned to reduce, eliminate, and prevent reoccurrence of the noncompliance. [40 CFR 122.41(l)(6). • Division staff may waive the requirement for a written report on a case-by-case basis.

PART II, SECTION G, ITEM (4)
DRAW DOWN OF SEDIMENT BASINS FOR MAINTENANCE OR CLOSE OUT

Sediment basins and traps that receive runoff from drainage areas of one acre or more shall use outlet structures that withdraw water from the surface when these devices need to be drawn down for maintenance or close out unless this is infeasible. The circumstances in which it is not feasible to withdraw water from the surface shall be rare (for example, times with extended cold weather). Non-surface withdrawals from sediment basins shall be allowed only when all of the following criteria have been met:

(a) The E&SC plan authority has been provided with documentation of the non-surface withdrawal and the specific time periods or conditions in which it will occur. The non-surface withdrawal shall not commence until the E&SC plan authority has approved these items,
(b) The non-surface withdrawal has been reported as an anticipated bypass in accordance with Part III, Section C, Item (2)(c) and (d) of this permit,
(c) Dewatering discharges are treated with controls to minimize discharges of pollutants from stormwater that is removed from the sediment basin. Examples of appropriate controls include properly sited, designed and maintained dewatering tanks, weir tanks, and filtration systems,
(d) Vegetated, upland areas of the sites or a properly designed stone pad is used to the extent feasible at the outlet of the dewatering treatment devices described in Item (c) above,
(e) Velocity dissipation devices such as check dams, sediment traps, and riprap are provided at the discharge points of all dewatering devices, and
(f) Sediment removed from the dewatering treatment devices described in Item (c) above is disposed of in a manner that does not cause deposition of sediment into waters of the United States.

NCG01 SELF-INSPECTION, RECORDKEEPING AND REPORTING

EFFECTIVE: 04/01/19

Wagner Architecture, pllc
92 ELAM COURT
NEW HILL, NORTH CAROLINA 27562
TEL. (919) 612.5050

Kramer Engineering Services, pllc
100 S. Camellia St. Chapel Hill, NC 27516
TEL (919)933-3350
email: donna@kesplic.com
Firm license: P-1099

bennett&pless
formerly LHC STRUCTURAL ENGINEERS
5430 Wade Park Blvd, Suite 400
Raleigh, NC 27607
Tel 919 832 5587
Copyright 2022 • **Bennett & Pless, Inc.**
All Rights Reserved
B & P Job Number 22.08.048

NV5 ENGINEERS AND CONSULTANTS, INC.
3300 REGENCY PARKWAY, STE 100
CARY, NC 27518
P: 919.851.1912 www.NV5.com
NC License # F-1153
formerly OLVX Engineers + Consultants

NORTH CAROLINA PROFESSIONAL SEAL 22514 ENGINEER MICHAEL D. ALLEN
5/18/23

PREPARED FOR
NORTH CAROLINA
STATE UNIVERSITY
COLLEGE OF VETERINARY
MEDICINE

TRANSLATIONAL
RESEARCH FACILITY

revisions

building number

cadd file number

drawn by DFB

checked by MDA

date
Issued for Construction 05/18/2023

project number
NCSU CODE: 42124
ITEM: 305
WA 202207
SCO#: 21-24030-01A

C-501

NPDES
STABILIZATION
SPECIFICATIONS

sheet number: revision number:

"ALL CONSTRUCTION TO BE IN ACCORDANCE WITH ALL CITY OF RALEIGH AND / OR NCDOT STANDARDS AND SPECIFICATIONS"

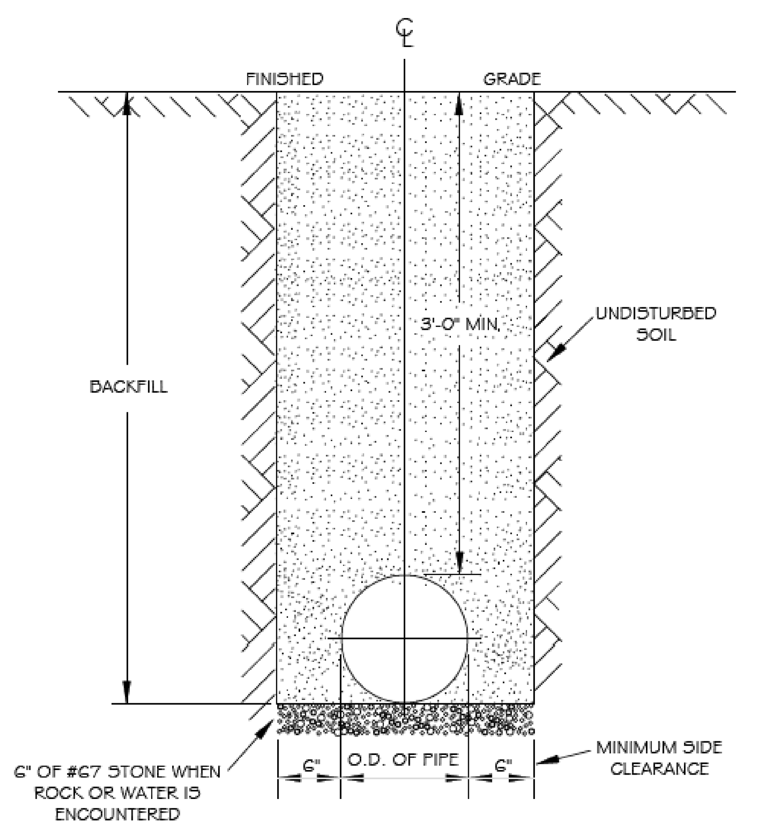

NOTES:
1. TRENCHES REQUIRING SHORING AND BRACING, DIMENSIONS SHALL BE TAKEN FROM THE INSIDE FACE OF THE SHORING AND BRACING.
2. NO ROCKS OR BOULDERS 4" OR LARGER TO BE USED IN BACKFILL.
3. ALL BACKFILL MATERIAL SHALL BE SUITABLE NATIVE MATERIAL.
4. BACKFILL SHALL BE TAMPED IN 6" LIFTS.
5. ACHIEVE 95% COMPACTION IN BACKFILL.

CITY OF RALEIGH
DEPARTMENT OF PUBLIC UTILITIES
TRENCH BOTTOM DIMENSIONS & BACKFILLING REQUIREMENTS FOR DUCTILE IRON

DWG. NO.	REVISIONS	DATE	REVISIONS	DATE
W-3	D.W.C.	9-3-99	ABB	2-15-05
	RRH	3-31-00	J.P.S.	10-29-10

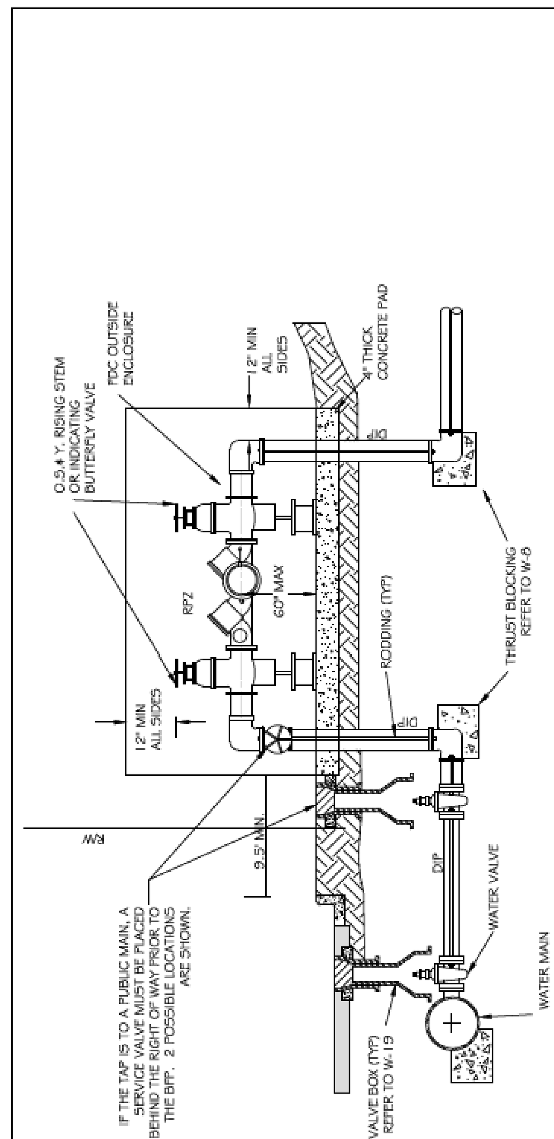

1. ALL ABOVE GROUND ENCLOSURES MUST HAVE ADEQUATE DRAINAGE (TWICE THE DIAMETER OF THE SUPPLY PIPE) TO DAYLIGHT ABOVE GRADE.
2. REDUCED PRESSURE BACKFLOW PRESENTERS MAY BE LOCATED IN A BUILDING PROVIDED THERE ARE NO OTHER UNPROTECTED TAPS BETWEEN THE MAIN AND THE BUILDING. DRAINAGE IN A BUILDING MUST BE TWICE THE DIAMETER OF THE SUPPY PIPE.
3. ABOVE GROUND INSULATED VAULTS MUST BE ASSE 1060 APPROVED ABOVE GROUND ENCLOSURES. SEE CROSS CONNECTION MANUAL FOR ENCLOSURE FREEZE PROTECTION AND CERTIFICATION REQUIREMENTS.
4. RESIDENTIAL LAWN IRRIGATION R.P. ASSEMBLIES THAT ARE REMOVED TO PREVENT FREEZING IN THE WINTER MONTHS MUST BE CAPPED OFF. ALL ABOVE GROUND ASSEMBLIES, EXCEPT RESIDENTIAL LAWN IRRIGATION ASSEMBLIES, MUST BE PROTECTED FROM FROST.
6. FOR ENCLOSURE DIMENSIONS SEE DETAIL W-34.
7. STEEL RODS AND BOLTS SHALL BE 3/4" HOT DIPPED GALVANIZED.
8. ALL ASSEMBLIES MUST BE ON THE CURRENT APPROVAL LIST.

CITY OF RALEIGH
DEPARTMENT OF PUBLIC UTILITIES
TYPICAL REDUCED PRESSURE ZONE BACKFLOW PREVENTER ASSEMBLY

DWG. NO.	REVISIONS	DATE	REVISIONS	DATE
W-36	Y.C.A.	12-31-91	A.B.B.	7-10-04
	D.W.C.	11-8-99	D.H.L.	6/18/08

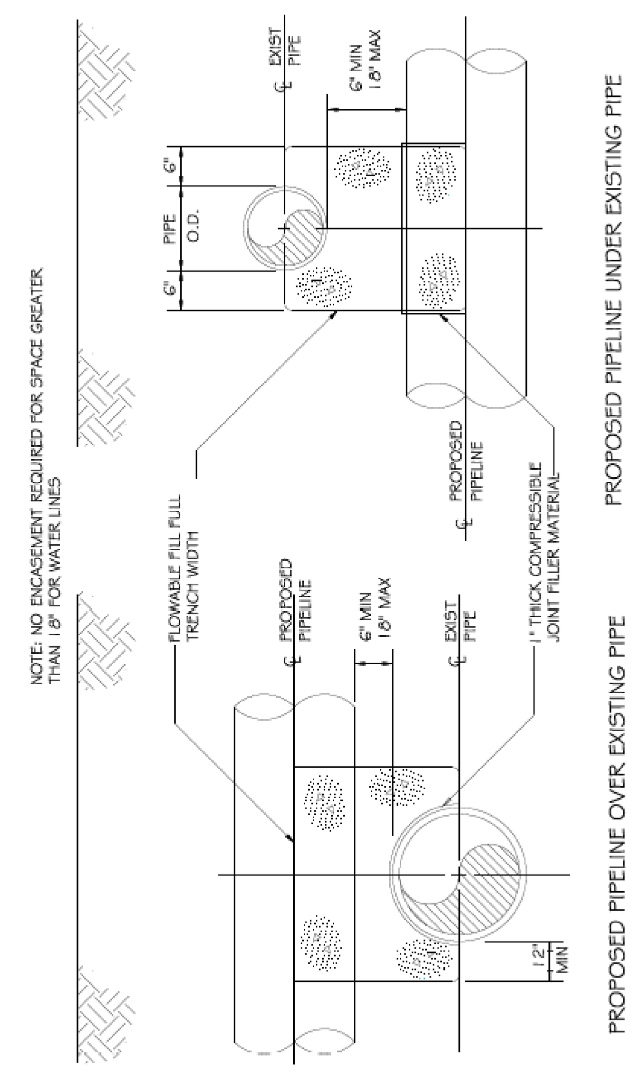

CITY OF RALEIGH
DEPARTMENT OF PUBLIC UTILITIES
CONCRETE CRADLE PROTECTION FOR WATER LINE CROSSINGS

DWG. NO.	REVISIONS	DATE	REVISIONS	DATE
W-41	DHL	2-20-08		

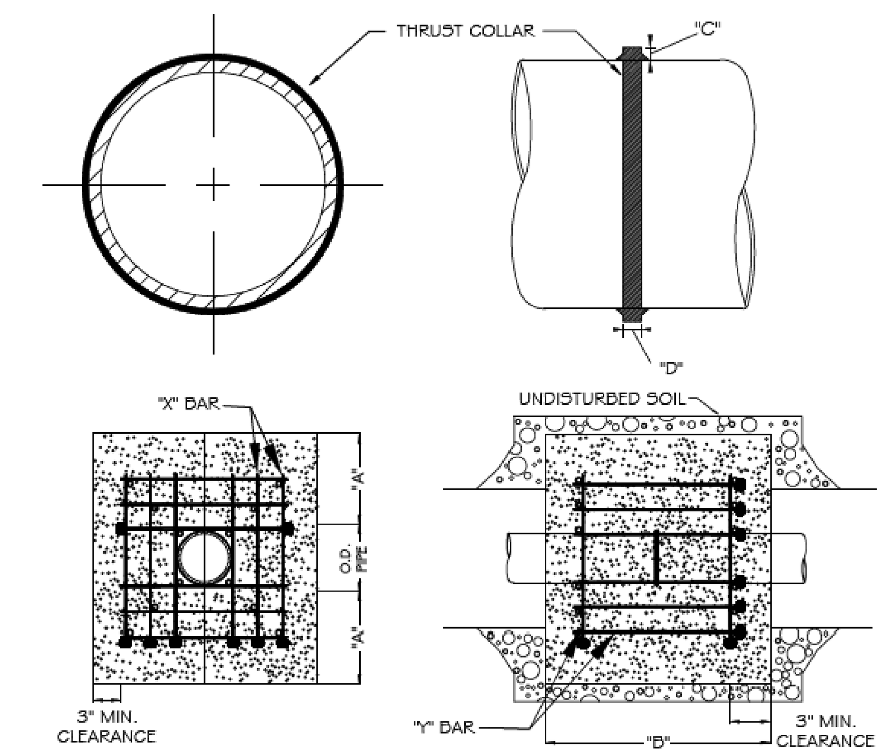

REINFORCING REQUIREMENTS

I.D. PIPE	REBAR SIZE	"X" BAR LENGTH	"X" BAR WEIGHT	"Y" BAR LENGTH	"Y" BAR WEIGHT	NO. REQUIRED
6" - 36"	#5	2'-2"+ O.D. PIPE	1.043 LBS/FT	1'-1"	1.1 LBS. EACH	X-24, Y-12
48" & greater	#6	3'-0"+ O.D. PIPE	1.502 LBS/FT	1'-3"	1.9 LBS. EACH	X-24, Y-12

THRUST COLLAR, AND THRUST SCHEDULE

I.D. PIPE	"A"	"B"	"C"	"D"
6" - 16"	1'-4"	1'-7"	2"	3/8"
20" - 24"	1'-4"	1'-7"	3"	1/2"
30" - 36"	1'-4"	1'-7"	4"	5/8"
48" & greater	1'-8"	1'-9"	6"	7/8"

NOTES:
1. SEE STANDARD DETAIL W-9 FOR THRUST BLOCK LOCATIONS.
2. CONCRETE SHALL BE 3000 PSI AND TRANSIT MIXED.
3. REINFORCING BARS SHALL BE DEFORMED AND TIED TOGETHER.
4. TRENCH BOTTOM WIDTH IN VICINITY OF THRUST BLOCK INSTALLATION SHALL BE THE MINIMUM WIDTH AS SHOWN ON STANDARD DETAIL W-3.
5. BACKFILL TAMPED IN 6" LIFTS PER STANDARD DETAIL W-3.
6. THRUST COLLAR MUST BE FACTORY WELDED ON BOTH SIDES ALONG BOTH EDGES OF COLLAR AROUND CIRCUMFERENCE.

CITY OF RALEIGH
DEPARTMENT OF PUBLIC UTILITIES
THRUST BLOCKING DESIGN DATA FOR WATER MAINS

DWG. NO.	REVISIONS	DATE	REVISIONS	DATE
W-7	RRH	1-21-00	J.P.S.	11-1-10
	D.H.L.	6-18-08		

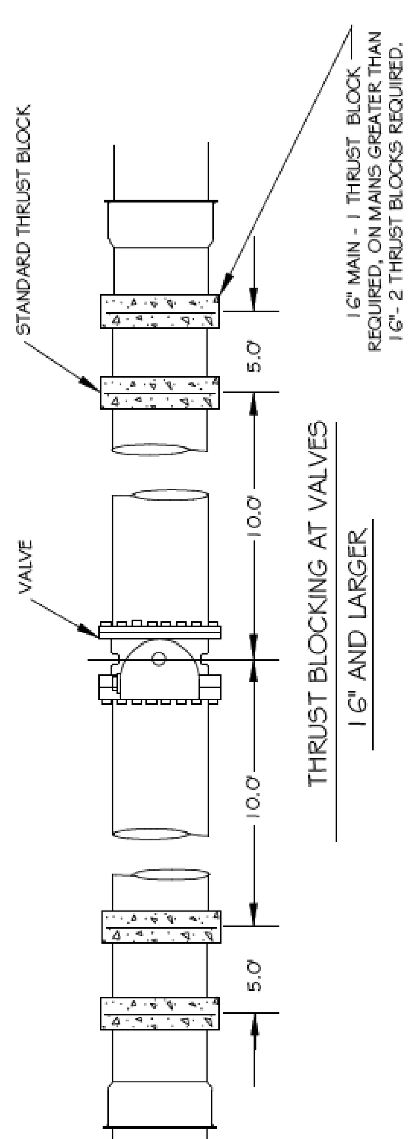

CITY OF RALEIGH
DEPARTMENT OF PUBLIC UTILITIES
STANDARD THRUST BLOCK INSTALLATION FOR 16" AND LARGER VALVES AND DEAD END MAINS

DWG. NO.	REVISIONS	DATE	REVISIONS	DATE
W-8	Y.C.A.	4-12-90	D.W.C.	9-7-99
		6-92	RRH	3-31-00

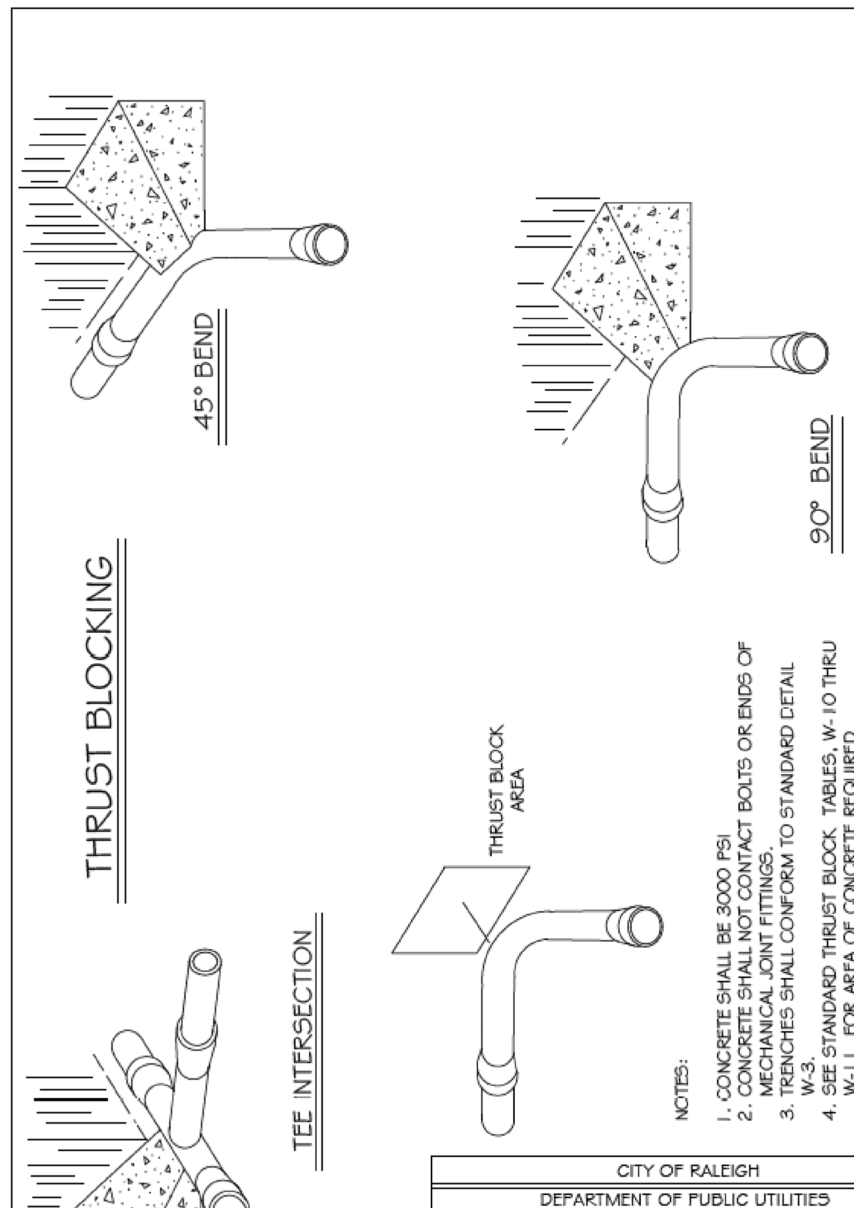

NOTES:
1. CONCRETE SHALL BE 3000 PSI
2. CONCRETE SHALL NOT CONTACT BOLTS OR ENDS OF MECHANICAL JOINT FITTINGS.
3. TRENCHES SHALL CONFORM TO STANDARD DETAIL W-3.
4. SEE STANDARD THRUST BLOCK TABLES, W-10 THRU W-11, FOR AREA OF CONCRETE REQUIRED.
5. ALL BENDS AND INTERSECTIONS SHALL HAVE CONCRETE THRUST BLOCKING.

CITY OF RALEIGH
DEPARTMENT OF PUBLIC UTILITIES
STANDARD THRUST BLOCKING VIEWS

DWG. NO.	REVISIONS	DATE	REVISIONS	DATE
W-9	D.W.C.	3-1-87	RRH	3-31-00
		9-7-99	D.H.L.	6-18-08

REACTION BEARING AREAS FOR HORIZONTAL WATER PIPE BENDS
BASED ON TEST PRESSURE OF 200 P.S.I.

ALL AREAS GIVEN IN SQUARE FEET.

SIZE AND DEGREE OF BEND	STATIC THRUST IN POUNDS	MODERATELY DRY CLAY 4000 LBS/FT2	SOFT CLAY 2000 LBS/FT2	1600 LBS/FT2 GRAVEL / COARSE SAND	8000 LBS/FT2 DRY CLAY - ALWAYS DRY	SAND, COMPACT FIRM 8000 LBS/FT2	SAND -CLEAN DRY 4000 LBS/FT2	SOIL 1000 LBS/FT2 QUICKSAND - VERY POOR	ROCK - POOR 10,000 LBS/FT2
6"									
11 1/4°	1,108	1	1	1	1	1	1	2	1
22 1/2°	2,207	1	2	2	1	1	1	3	1
45°	4,328	2	3	3	1	1	2	5	1
90°	7,996	2	4	5	1	1	2	8	1
PLUG	5,655	2	3	4	1	1	2	6	1
8"									
11 1/4°	1,970	1	1	2	1	1	1	2	1
22 1/2°	3,922	1	2	3	1	1	1	4	1
45°	7,694	2	4	5	1	1	2	8	1
90°	14,215	4	8	9	2	2	4	15	2
PLUG	10,053	3	5	6	2	2	3	10	1
12"									
11 1/4°	4,433	2	3	3	1	1	2	5	1
22 1/2°	8,826	3	5	6	2	2	3	9	1
45°	17,312	5	9	11	3	3	5	18	2
90°	31,983	8	16	19	4	4	8	32	4
PLUG	22,619	6	12	14	3	3	6	23	3
16"									
11 1/4°	7,881	2	4	5	1	1	2	8	1
22 1/2°	15,691	4	8	10	2	2	4	16	2
45°	30,779	8	16	19	4	4	8	31	4
90°	56,861	15	29	35	8	8	15	57	6
PLUG	40,213	10	21	25	5	5	10	41	5

REACTION BEARING AREAS ARE IN SQUARE FEET MEASURED IN A VERTICAL PLANE IN THE TRENCH SIDE AT AN ANGLE OF 90° TO THE THRUST VECTOR.

USE 6" - 90 BEND VALUE FOR HYDRANTS FOR ADDITIONAL SAFETY FACTOR.

CITY OF RALEIGH
DEPARTMENT OF PUBLIC UTILITIES
THRUST BLOCKING DESIGN QUANTITY TABLE

DWG. NO.	REVISIONS	DATE	REVISIONS	DATE
W-10	D.W.C.	6-23-99		

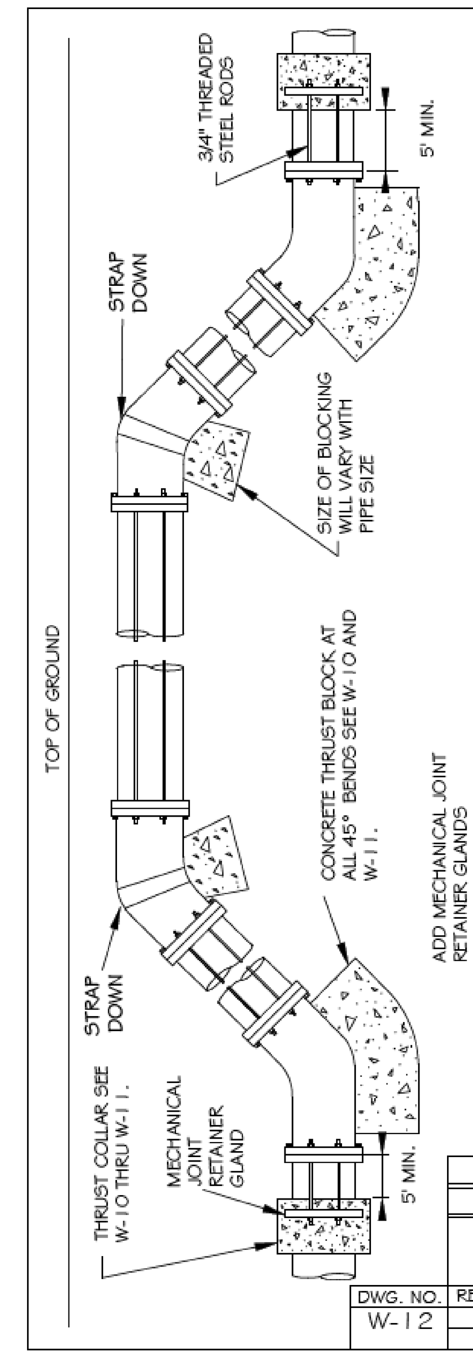

ROD REQUIREMENTS

SIZE OF 45 BEND	STATIC THRUST IN POUNDS	NO. OF RODS REQUIRED
6"	4,328	2
8"	7,694	4
12"	17,312	4
16"	30,779	8
24"	69,252	8

GENERAL NOTES:
1. STEEL RODS AND BOLTS SHALL BE 3/4" HOT DIPPED GALVANIZED.
2. CONCRETE SHALL NOT CONTACT BOLTS OR ENDS OF MECHANICAL JOINT BENDS.
3. RESTRAINED MECHANICAL GLANDS TO BE USED AT ALL FITTINGS.
4. MUST USE DUCTILE IRON EYE BOLTS WHERE NECESSARY.
5. 3' MINIMUM COVER MUST BE MAINTAINED ON ALL WATER MAINS

CITY OF RALEIGH
DEPARTMENT OF PUBLIC UTILITIES
STANDARD VERTICAL BEND

DWG. NO.	REVISIONS	DATE	REVISIONS	DATE
W-12	ABB	4-6-04	J.P.S.	11-1-10
	D.H.L.	6-18-08		

Wagner Architecture, pllc
92 ELAM COURT
NEW HILL, NORTH CAROLINA 27562
TEL. (919) 612.5050

Kramer Engineering Services, pllc
100 S. Camellia St, Chapel Hill, NC 27516
TEL (919)933-3350
email: donna@kespllc.com
Firm license: P-1099

bennett&pless
formerly LHC STRUCTURAL ENGINEERS
5430 Wade Park Blvd, Suite 400
Raleigh, NC 27607
Tel 919 832 5587

Copyright 2022 • Bennett & Pless, Inc.
All Rights Reserved

B & P Job Number 22.08.048

NV5
NV5 ENGINEERS AND CONSULTANTS, INC.
3300 REGENCY PARKWAY, STE 100
CARY, NC 27518
P: 919.851.1912 www.NV5.com
NC License # F-1333
formerly CALYX Engineers + Consultants

NORTH CAROLINA PROFESSIONAL ENGINEER SEAL 22514 MICHAEL D. ALLEN 5/18/23

PREPARED FOR
NORTH CAROLINA STATE UNIVERSITY
COLLEGE OF VETERINARY MEDICINE

TRANSLATIONAL RESEARCH FACILITY

revisions

building number

cadd file number

drawn by
DFB

checked by
MDA

date
Issued for Construction 05/18/2023

project number
NCSU CODE: 42124
ITEM: 305
WA 202207
SCO#: 21-24030-01A

D-100

UTILITY DETAILS

sheet number revision number

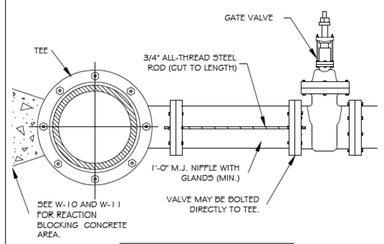

ROD REQUIREMENTS	
NO. OF RODS	BRANCH SIZE
4"	2
6"	2
8"	4
12"	4
16"	6
24"	6
30"	8
36"	8

NOTES:
1. STEEL RODS AND BOLTS SHALL BE 3/4" HOT DIPPED GALVANIZED.
2. SEE STANDARD THRUST BLOCK TABLES W-10 AND W-11 FOR CONCRETE.
3. CONCRETE SHALL NOT CONTACT BOLTS OR ENDS OF MECHANICAL FITTINGS.
4. THIS RODDING REQUIREMENT DOES NOT APPLY TO FIRE HYDRANTS.

CITY OF RALEIGH
DEPARTMENT OF PUBLIC UTILITIES

VALVE RESTRAINT AT TEES AND CROSSES FOR LINES (4"-24")

DWG. NO.	REVISIONS	DATE	REVISIONS	DATE
W-15	RRH	3-31-00	D.H.L.	6-16-08
	A.B.B.	4-19-04	J.P.S.	11-1-10

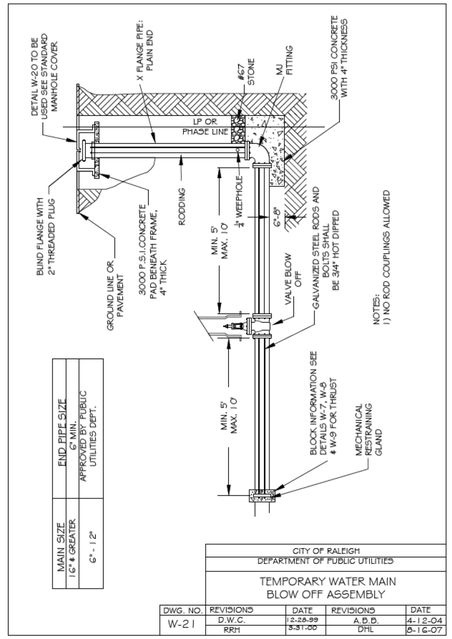

CITY OF RALEIGH
DEPARTMENT OF PUBLIC UTILITIES

TEMPORARY WATER MAIN BLOW OFF ASSEMBLY

DWG. NO.	REVISIONS	DATE	REVISIONS	DATE
W-21	D.W.C.	2-28-99	A.B.B.	4-12-04
	RRH	3-31-00	DHL	5-16-07

Wagner Architecture, pllc
92 ELAM COURT
NEW HILL, NORTH CAROLINA 27562
TEL. (919) 612.5050

Kramer Engineering Services, pllc
100 S. Camellia St. Chapel Hill, NC 27516
TEL (919)933-3350
email: donna@kesplic.com
Firm license: P-1099

bennett&pless
formerly LHC STRUCTURAL ENGINEERS
5430 Wade Park Blvd, Suite 400
Raleigh, NC 27607
Tel 919 832 5587
Copyright 2022 • Bennett & Pless, Inc.
All Rights Reserved
B & P Job Number 22.08.048

NV5
NV5 ENGINEERS AND CONSULTANTS, INC.
3300 REGENCY PARKWAY, STE 100
CARY, NC 27518
P: 919.851.1912 www.NV5.com
NC License # F-1333
formerly CALVX Engineers • Consultants

NORTH CAROLINA PROFESSIONAL SEAL 22514 ENGINEER MICHAEL D. ALLEN
5/18/23

PREPARED FOR
NORTH CAROLINA STATE UNIVERSITY
COLLEGE OF VETERINARY MEDICINE

TRANSLATIONAL RESEARCH FACILITY

revisions

building number

cadd file number

drawn by DFB

checked by MDA

date Issued for Construction 05/18/2023

project number
NCSU CODE: 42124
ITEM: 305
WA 202207
SCO#: 21-24030-01A

D-101

UTILITY DETAILS

sheet number: revision number:

"ALL CONSTRUCTION TO BE IN ACCORDANCE WITH ALL CITY OF RALEIGH AND / OR NCDOT STANDARDS AND SPECIFICATIONS"

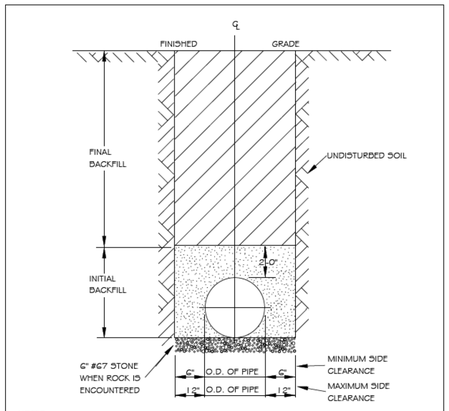

NOTES:
1. TRENCHES REQUIRING SHORING AND BRACING, DIMENSIONS SHALL BE TAKEN FROM THE INSIDE FACE OF THE SHORING AND BRACING.
2. NO ROCKS OR BOULDERS 4" OR LARGER TO BE USED IN INITIAL BACKFILL.
3. ALL BACKFILL MATERIAL SHALL BE SUITABLE NATIVE MATERIAL.
4. BACKFILL SHALL BE TAMPED IN 6" LIFTS IN TRAFFIC AREAS, 12" IN NON-TRAFFIC AREAS.
5. ACHIEVE 80% COMPACTION IN NON-TRAFFIC AREAS, AND 95% COMPACTION IN TRAFFIC AREAS.
6. IF IN EASEMENT 4" TOPSOIL, AND 12" CLEAN SELECT FILL MAY BE REQUIRED.
7. NO BOULDERS 8" IN DIAMETER OR GREATER ALLOWED IN FINAL BACKFILL.

CITY OF RALEIGH
DEPARTMENT OF PUBLIC UTILITIES
TRENCH BOTTOM DIMENSIONS & BACKFILLING REQUIREMENTS FOR DUCTILE IRON

DWG. NO.	REVISIONS	DATE	REVISIONS	DATE
S-4	D.W.C.	9-3-99		
	RRH	3-30-00		

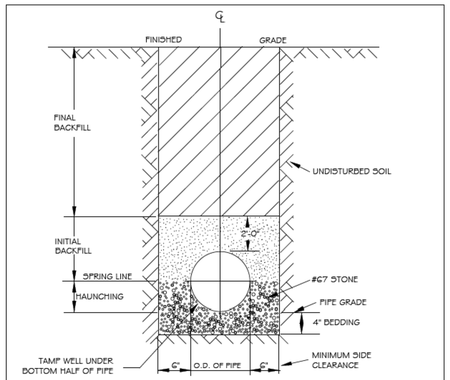

TYPICAL TRENCH BOTTOM DIMENSIONS FOR SDR 35 PVC GRAVITY PIPE

NOTES:
1. FOR TRENCHES REQUIRING SHORING AND BRACING, DIMENSIONS SHALL BE TAKEN FROM THE INSIDE FACE OF THE SHORING AND BRACING.
2. NO ROCKS OR BOULDERS 4" OR LARGER TO BE USED IN INITIAL BACKFILL.
3. ALL BACKFILL MATERIAL SHALL BE SUITABLE NATIVE MATERIAL.
4. BACKFILL SHALL BE TAMPED IN 6" LIFTS IN TRAFFIC AREAS, 12" IN NON-TRAFFIC AREAS.

CITY OF RALEIGH
DEPARTMENT OF PUBLIC UTILITIES
TRENCH BOTTOM DIMENSIONS AND BACKFILLING REQUIREMENTS FOR PVC GRAVITY SEWER MAIN

DWG. NO.	REVISIONS	DATE	REVISIONS	DATE
S-5	TO NOTES	3-1-87	D.W.C.	9-3-99
		7-2-82	RRH	3-30-00

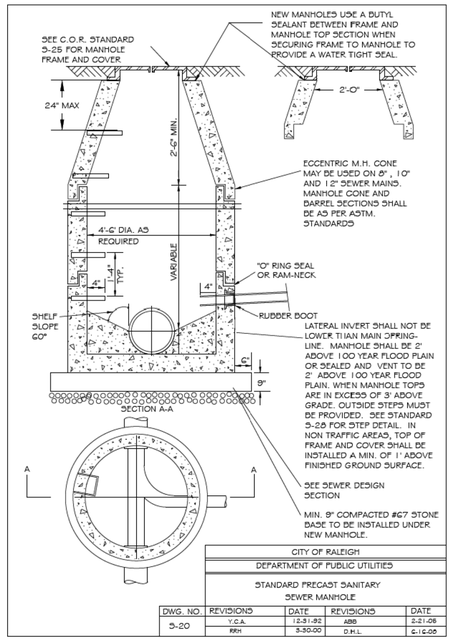

CITY OF RALEIGH
DEPARTMENT OF PUBLIC UTILITIES
STANDARD PRECAST SANITARY SEWER MANHOLE

DWG. NO.	REVISIONS	DATE	REVISIONS	DATE
S-20	Y.C.A.	12-31-92	ABB	2-21-06
	RRH	3-30-00	D.H.L.	6-16-06

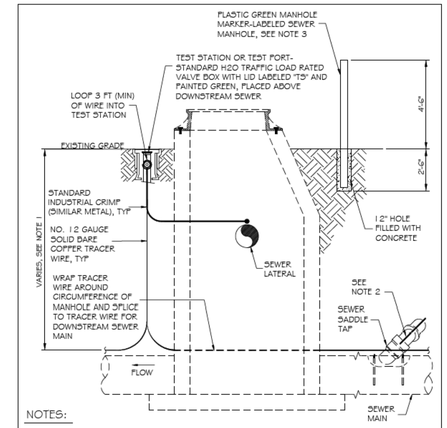

NOTES:
1. THE TRACER WIRE SHALL BE CONTINUOUS TO THE GREATEST EXTENT POSSIBLE. FOR GRAVITY MAIN AND OR LATERAL INSTALLATIONS LESS THAN 8 FT, THE TRACING WIRE SHALL BE ATTACHED TO THE PIPE. TRACER WIRE SHALL BE LAID FLAT AND SECURELY AFFIXED TO THE PIPE AT 10 FOOT INTERVALS. FOR GRAVITY MAIN AND OR LATERAL INSTALLATION DEEPER THAN 8 FT, THE TRACING WIRE SHALL BE INSTALLED AT A DEPTH OF 7-8 FT. THE WIRE SHALL BE PROTECTED FROM DAMAGE DURING THE EXECUTION OF THE WORK. NO BREAKS OF CUTS IN THE TRACER WIRE SHALL BE PERMITTED.
2. WHERE LATERAL TAPS ARE MADE BY SERVICE SADDLES, THE TRACER WIRE SHALL NOT BE ALLOWED TO TO BE PLACED BETWEEN THE SADDLE AND MAIN.
3. MANHOLE MARKERS SHALL BE PLACED ADJACENT TO MANHOLES AT THE DISCRETION OF OWNER OR OWNER'S REPRESENTATIVE.

CITY OF RALEIGH
DEPARTMENT OF PUBLIC UTILITIES
GRAVITY SEWER MAIN TRACER WIRE AND MANHOLE MARKER

DWG. NO.	REVISIONS	DATE	REVISIONS	DATE
S-20A	WRD	09-14		

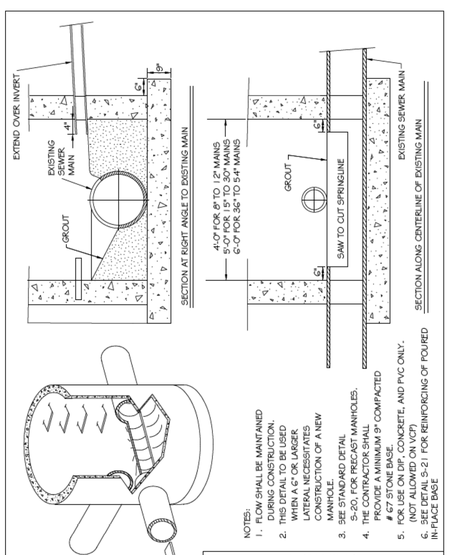

NOTES:
1. FLOW SHALL BE MAINTAINED DURING CONSTRUCTION.
2. THIS DETAIL TO BE USED WHEN A 6" OR LARGER LATERAL NECESSITATES CONSTRUCTION OF A NEW MANHOLE.
3. SEE STANDARD DETAIL S-20, FOR PRECAST MANHOLES.
4. THE CONTRACTOR SHALL PROVIDE A MINIMUM 9" COMPACTED #67 STONE BASE.
5. FOR USE ON DIP, CONCRETE, AND PVC ONLY. NOT ALLOWED ON VCP.
6. SEE DETAIL S-21 FOR REINFORCING OF POURED IN-PLACE BASE

CITY OF RALEIGH
DEPARTMENT OF PUBLIC UTILITIES
STANDARD MANHOLE INSTALLATION OVER EXISTING SEWER MAIN

DWG. NO.	REVISIONS	DATE	REVISIONS	DATE
S-22	Y.C.A.	12-31-91	A.B.B.	1-19-06
	RRH	3-30-00	D.H.L.	01/2006

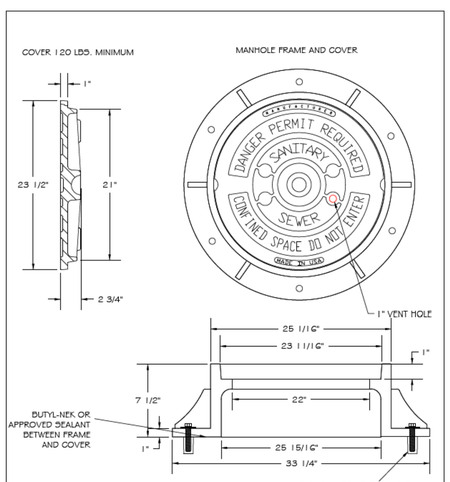

NOTES:
1) ALL MANHOLE FRAMES SHALL BE DOMESTICALLY CAST.
2) FRAME SHALL BE A MINIMUM WEIGHT OF 182 LBS. WITHIN PUBLIC ROW AND 160 LBS. WITHIN EASEMENTS.
3) COVER SHALL WEIGH A MIN. OF 120 LBS.
4) ALL MANHOLE FRAMES OUTSIDE OF PAVED SURFACES SHALL BE BOLTED TO THE CONE SECTION OR RING WITH A MINIMUM OF 4 BOLTS PER FRAME.

CITY OF RALEIGH
DEPARTMENT OF PUBLIC UTILITIES
STANDARD MANHOLE COVER

DWG. NO.	REVISIONS	DATE	REVISIONS	DATE
S-25	3-1-87	3-1-87	A.B.B.	2-9-05
	RRH	3-30-00	D.H.L.	6-18-06

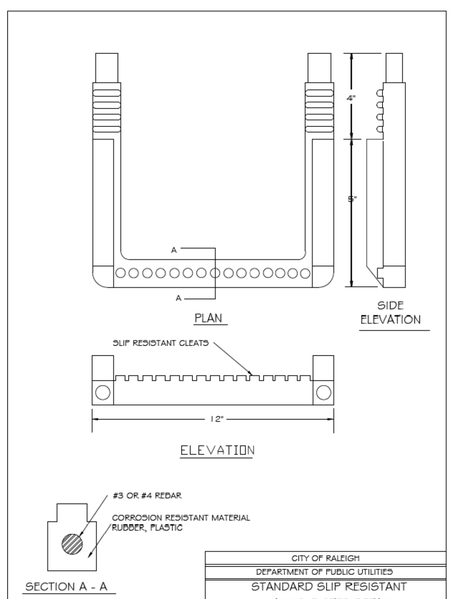

CITY OF RALEIGH
DEPARTMENT OF PUBLIC UTILITIES
STANDARD SLIP RESISTANT MANHOLE STEP DETAIL

DWG. NO.	REVISIONS	DATE	REVISIONS	DATE
S-28	RRH	3-30-00		

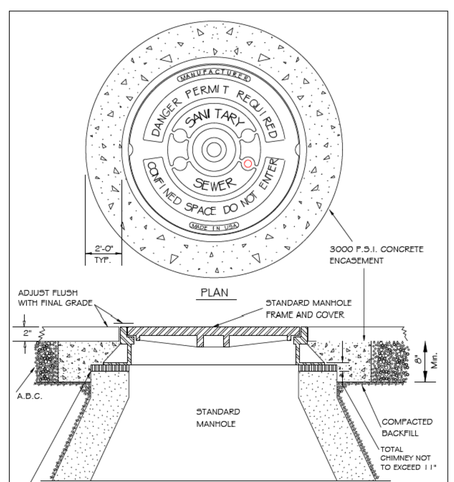

CITY OF RALEIGH
DEPARTMENT OF PUBLIC UTILITIES
STANDARD MANHOLE FRAME AND COVER DETAIL WITHIN PAVED SURFACES

DWG. NO.	REVISIONS	DATE	REVISIONS	DATE
S-29	Y.C.A.	12-31-91	ABB	9-20-04
	RRH	3-30-00	DHL	11-29-07

Wagner Architecture, pllc
92 ELAM COURT
NEW HILL, NORTH CAROLINA 27562
TEL. (919) 612.5050

Kramer Engineering Services, pllc
100 S. Camellia St. Chapel Hill, NC 27516
TEL (919)933-3350
email: donna@kesplic.com
Firm license: P-1099

bennett&pless
formerly LHC STRUCTURAL ENGINEERS
5430 Wade Park Blvd, Suite 400
Raleigh, NC 27607
Tel 919 832 5587

Copyright 2022 • Bennett & Pless, Inc.
All Rights Reserved

B & P Job Number 22.08.048

NV5 ENGINEERS AND CONSULTANTS, INC.
3300 REGENCY PARKWAY, STE 100
CARY, NC 27518
P: 919.851.1912 www.NV5.com
NC License # F-1333
formerly DLVW Engineers • Consultants

NORTH CAROLINA PROFESSIONAL SEAL 22514 ENGINEER MICHAEL D. ALLEN
5/18/23

PREPARED FOR
NORTH CAROLINA STATE UNIVERSITY
COLLEGE OF VETERINARY MEDICINE

TRANSLATIONAL RESEARCH FACILITY

revisions

building number

cadd file number

drawn by DFB

checked by MDA

date
Issued for Construction 05/18/2023

project number
NCSU CODE: 42124
ITEM: 305
WA 202207
SCO#: 21-24030-01A

D-102

UTILITY DETAILS

sheet number: revision number:

"ALL CONSTRUCTION TO BE IN ACCORDANCE WITH ALL CITY OF RALEIGH AND / OR NCDOT STANDARDS AND SPECIFICATIONS"

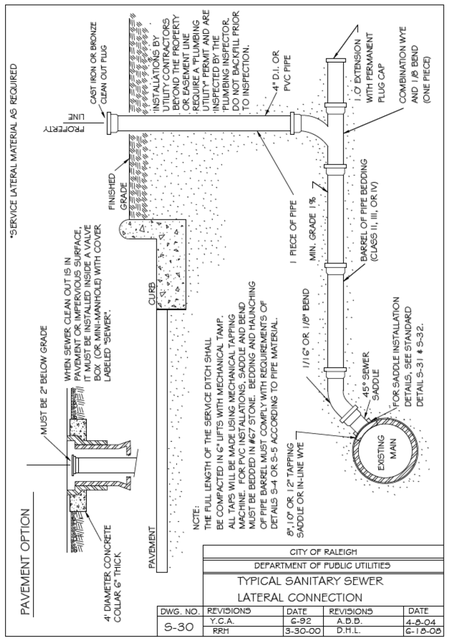

CITY OF RALEIGH				
DEPARTMENT OF PUBLIC UTILITIES				
TYPICAL SANITARY SEWER LATERAL CONNECTION				
DWG. NO.	REVISIONS	DATE	REVISIONS	DATE
S-30	Y.C.A.	6-92	A.D.D.	4-5-04
	RRH	3-30-00	D.H.L.	6-12-06

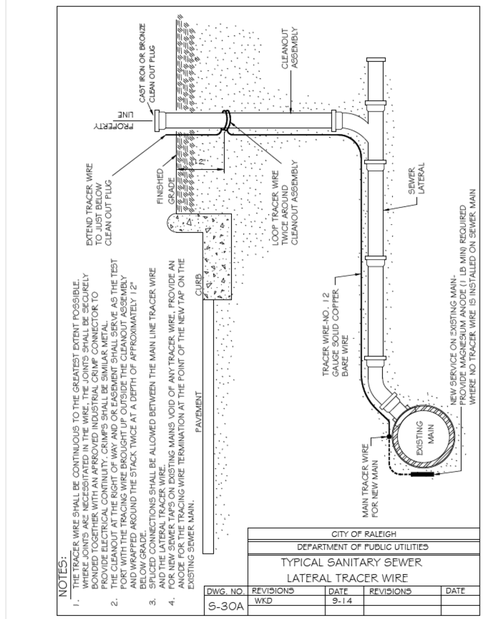

CITY OF RALEIGH				
DEPARTMENT OF PUBLIC UTILITIES				
TYPICAL SANITARY SEWER LATERAL TRACER WIRE				
DWG. NO.	REVISIONS	DATE	REVISIONS	DATE
S-30A	WKD	9-14		

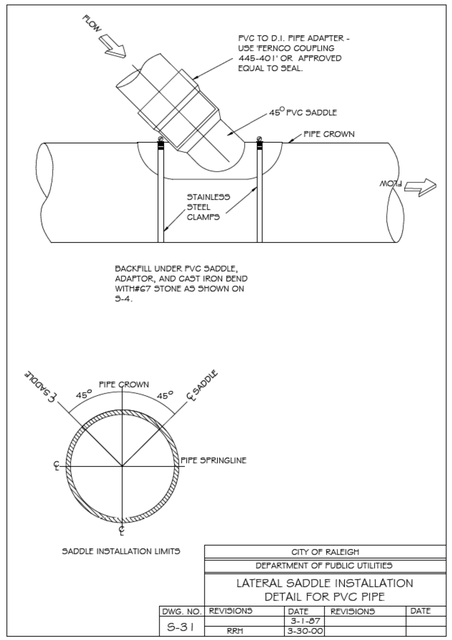

CITY OF RALEIGH				
DEPARTMENT OF PUBLIC UTILITIES				
LATERAL SADDLE INSTALLATION DETAIL FOR PVC PIPE				
DWG. NO.	REVISIONS	DATE	REVISIONS	DATE
S-31	RRH	3-1-07 3-30-00		

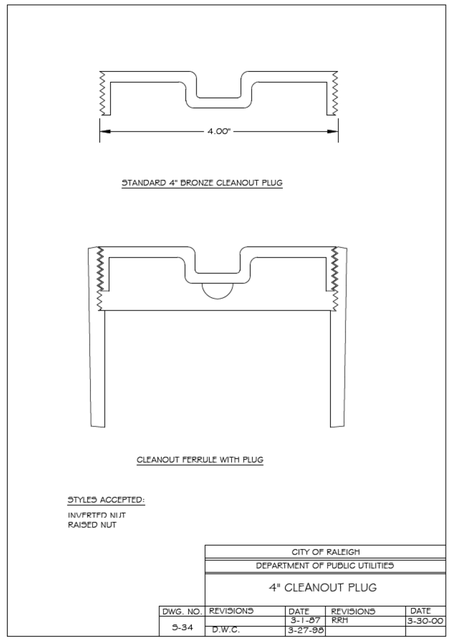

CITY OF RALEIGH				
DEPARTMENT OF PUBLIC UTILITIES				
4" CLEANOUT PLUG				
DWG. NO.	REVISIONS	DATE	REVISIONS	DATE
S-34	D.W.C.	3-1-07 3-27-95	RRH	3-30-00

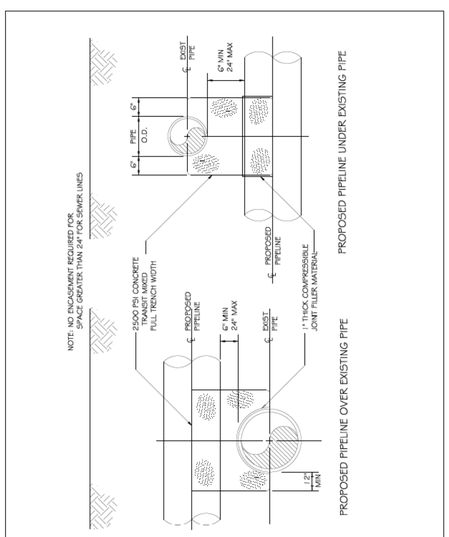

CITY OF RALEIGH				
DEPARTMENT OF PUBLIC UTILITIES				
CONCRETE CRADLE PROTECTION FOR SEWER LINE CROSSINGS				
DWG. NO.	REVISIONS	DATE	REVISIONS	DATE
S-49	DHL	2-20-08		

SMITH® JAY R. SMITH MFG. CO.® — MEMBER OF: PDI

LOCATION

GENERAL PURPOSE ROOF DRAINS

ROOF DRAIN WITH ADJUSTABLE EXTENSION

FUNCTION: Used in flat roofs of any construction. The adjustable extension sleeve permits adjustment from a minimum of 1 1/4" (32) to a maximum of 4" (100), easily accommodating up to 2 3/4"(70) of varying insulation thicknesses. The positive threading allows smooth perimeter movement and circumferential support of the top at any adjusted elevation. Large low profile dome provides sufficient free area for quick drainage of rainwater and protection against debris.

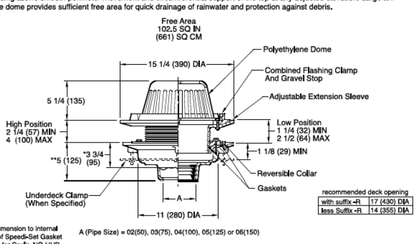

*This dimension to internal stop of Speed-Set Gasket
**Same for Caulk, NO-HUB and Speed-Set, 3 3/4 (95) for Threaded

A (Pipe Size) = 02(50), 03(75), 04(100), 05(125) or 06(150)

recommended deck opening

with suffix -R	17 (430) DIA
less Suffix -R	14 (355) DIA

Fig. 1015C ..... CAULK OUTLET
X Fig. 1015Y ..... NO-HUB OUTLET

REGULARLY FURNISHED:
Duco Cast Iron Body with Adjustable Extension Sleeve, Reversible Collar, Combined Flashing Clamp and Gravel Stop with Polyethylene Dome.

Note: See reverse side for assembly instructions.

NOTE: Dimensions shown in parentheses are in millimeters.

VARIATIONS:
- Expansion Joint (Specify Fig. 1710)
- "L" Shaped Underdeck Clamp -CL
- L Speed-Set Service Weight 02(50), 03(75) & 04(100)" sizes only
- LXH Speed-Set Extra Heavy 02(50), 03(75) & 04(100)" sizes only
- Secondary Flashing Clamp -C2
- Sump Receiver -R
- Underdeck Clamp -C
- Vandal Proof Dome -U
- Side Outlet Drain (Specify Fig. 1025)
- T Threaded Outlet

OPTIONAL MATERIALS:
- ▲ Aluminum Dome -AD
- ▲ Cast Iron Dome -CID
- Galvanized Cast Iron -G
- ▲ X Rough Bronze Dome -RBD

▲Optional domes' free area are as follows:

Aluminum	98 (632)
Cast Iron	80 (516)
Bronze	95 (613)

FIGURE NUMBER	REV.	DATE	DESCRIPTION	BY	CKD. BY	WEIGHT POUNDS	VOLUME CUBIC FEET	FIGURE NUMBER
1015	N	7-30-19	Removed NOTE	MW	CL			1015
	M	8-18-15	Added Flow Rate Note	TBW	BW			
	L	06/01/09	Added Optional Dome Notes	JJ	CL			
	K	12-15-06	Added Note	RN	CL			

DRAWING NUMBER S1015 | SCALE: NONE | DATE: 12-19-94 | APPROVED BY: JR | CHECKED BY: MCD | DRAWN BY: EMB

WE CAN ASSUME NO RESPONSIBILITY FOR USE OF SUPERSEDED OR VOID DATA

DIMENSIONS ARE SUBJECT TO MANUFACTURING TOLERANCE AND CHANGE WITHOUT NOTICE

WARNING: Cancer and Reproductive Harm • www.P65Warnings.ca.gov

SMITH® JAY R. SMITH MFG. CO.® — MEMBER OF: PDI

LOCATION

ADJUSTABLE ROOF DRAIN

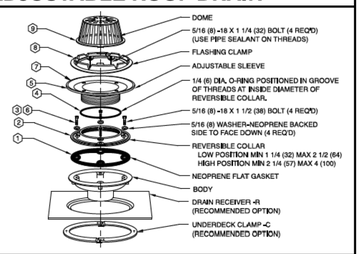

1. Position flat gasket on drain body, align holes in gasket with holes in body.
2. Determine if reversible collar is to be installed in the low (1 1/4" to 2 1/2") or high (2 1/4" to 4") position.
2a. Place reversible collar on body and align holes in collar with holes in gasket and body.
3. Secure collar to body with 1 1/2" long bolts insuring neoprene backed washers are installed with neoprene side facing down at proper locations between top of reversible collar and bolt head. Tighten bolts in the following manner: 1, 3, 2 & 4, Tighten No. 1 bolt approximately one full turn then No. 3, No. 2 and No. 4 (same manner as for No. 1). Continue this method until reversible ring has been secured evenly all around.
4. Wipe "O" Ring recess in reversible collar clean. Insert dry "O" Ring in groove of threads at inside diameter of reversible collar. Lubricate the face of "O" Ring in it's entirety with (1) tube of the lubricant provided and remaining threads.
5. Lubricate liberally the entire lead-in chamfer and first 2 threads of the adjustable sleeve. Thread adjustable sleeve into reversible collar and adjust to required height. Do not exceed minimum/maximum adjustment dimensions.
6. Check bolts a final time to insure tightness.
7. Run waterproofing membrane over top of adjustable sleeve to inside of bolt circle.
8. Install flashing clamp and secure with (4) bolts, use pipe sealant on threads. Again tighten bolts in the 1, 3, 2, 4 manner. (See 3)
9. Install Dome

NOTE: Dimensions shown in parentheses are in millimeters.

FIGURE NUMBER	REV.	DATE	DESCRIPTION	BY	CKD. BY	WEIGHT POUNDS	VOLUME CUBIC FEET	FIGURE NUMBER
1015BS	J	7-30-19	Removed NOTE	MW	CL			1015BS
	H	8-18-15	Added Flow Rate Note	TBW	BW			
	G	1-13-15	Rev. Callouts, Text	TBW	CL			
	F	12-15-06	Rev. Dwg.	RN	CL			

DRAWING NUMBER S1015BS | SCALE: NONE | DATE: 6-23-05 | APPROVED BY: TD | CHECKED BY: MCD | DRAWN BY: EMB

WE CAN ASSUME NO RESPONSIBILITY FOR USE OF SUPERSEDED OR VOID DATA

DIMENSIONS ARE SUBJECT TO MANUFACTURING TOLERANCE AND CHANGE WITHOUT NOTICE

WARNING: Cancer and Reproductive Harm • www.P65Warnings.ca.gov

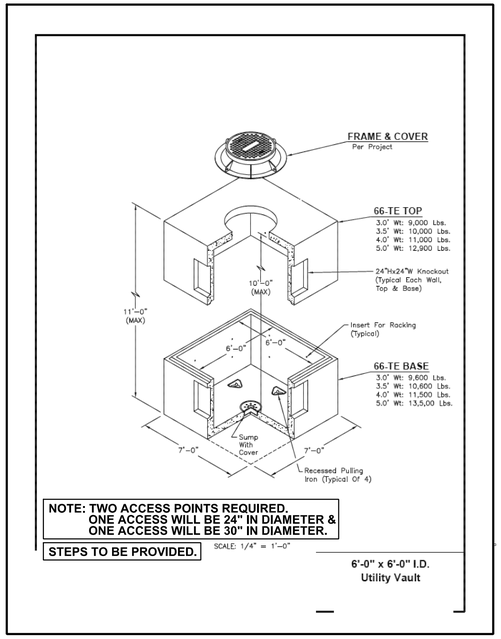

6'-0" x 6'-0" I.D.
Utility Vault

Wagner Architecture, pllc
92 ELAM COURT
NEW HILL, NORTH CAROLINA 27562
TEL. (919) 612.5050

Kramer Engineering Services, pllc
100 S. Camellia St. Chapel Hill, NC 27516
TEL (919)933-3350
email: donna@kesplic.com
Firm license: P-1099

bennett&pless
formerly LHC STRUCTURAL ENGINEERS
5430 Wade Park Blvd, Suite 400
Raleigh, NC 27607
Tel 919 832 5587

Copyright 2022 • Bennett & Pless, Inc.
All Rights Reserved

B & P Job Number 22.08.048

NV5 ENGINEERS AND CONSULTANTS, INC.
3300 REGENCY PARKWAY, STE 100
CARY, NC 27518
P: 919.851.1912 www.NV5.com
NC License # F-1333
formerly CALVX Engineers • Consultants

NORTH CAROLINA PROFESSIONAL SEAL 22514 ENGINEER MICHAEL D. ALLEN 5/18/23

PREPARED FOR
NORTH CAROLINA STATE UNIVERSITY
COLLEGE OF VETERINARY MEDICINE

TRANSLATIONAL RESEARCH FACILITY

revisions

building number

cadd file number

drawn by DFB

checked by MDA

date Issued for Construction 05/18/2023

project number NCSU CODE: 42124 ITEM: 305 WA 202207 SCO#: 21-24030-01A

D-103

UTILITY DETAILS

sheet number: revision number:

Wagner Architecture, pllc
92 ELAM COURT
NEW HILL, NORTH CAROLINA 27562
TEL. (919) 612.5050

Kramer Engineering Services, pllc
100 S. Camellia St. Chapel Hill, NC 27516
TEL (919)933-3350
email: donna@kesplic.com
Firm license: P-1099

bennett&pless
formerly LHC STRUCTURAL ENGINEERS
5430 Wade Park Blvd, Suite 400
Raleigh, NC 27607
Tel 919 832 5587
Copyright 2022 • **Bennett & Pless, Inc.**
All Rights Reserved
B & P Job Number 22.08.048

NV5
NV5 ENGINEERS AND CONSULTANTS, INC.
3300 REGENCY PARKWAY, STE 100
CARY, NC 27518
P: 919.851.1912 www.NV5.com
NC License # F-1333
formerly CALVIX Engineers • Consultants

NORTH CAROLINA PROFESSIONAL SEAL 22514 ENGINEER MICHAEL D. ALLEN
5/18/23

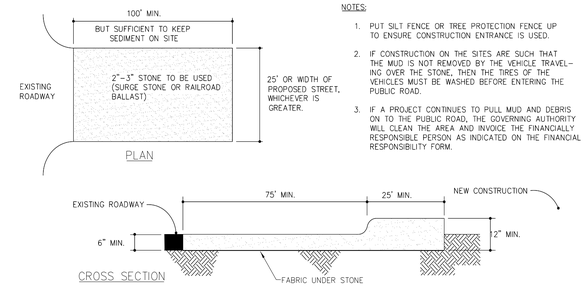

NOTES:

1. PUT SILT FENCE OR TREE PROTECTION FENCE UP TO ENSURE CONSTRUCTION ENTRANCE IS USED.
2. IF CONSTRUCTION ON THE SITES ARE SUCH THAT THE MUD IS NOT REMOVED BY THE VEHICLE TRAVEL-ING OVER THE STONE, THEN THE TIRES OF THE VEHICLES MUST BE WASHED BEFORE ENTERING THE PUBLIC ROAD.
3. IF A PROJECT CONTINUES TO PULL MUD AND DEBRIS ON TO THE PUBLIC ROAD, THE GOVERNING AUTHORITY WILL CLEAN THE AREA AND INVOICE THE FINANCIALLY RESPONSIBLE PERSON AS INDICATED ON THE FINANCIAL RESPONSIBILITY FORM.

MAINTENANCE:

-THE GRAVEL CONSTRUCTION ENTRANCE MUST BE MAINTAINED IN A CONDITION TO PREVENT TRACKING OR DIRECT FLOW OF MUD ONTO ADJACENT ROADWAYS.
-REPLACEMENT OF STONE MAY BE NECESSARY TO ENSURE THE GRAVEL ENTRANCE FUNCTIONS PROPERLY.
-REPLENISHMENT OF STONE MY BE NECESSARY.
-FREQUENT CHECKS OF THE DEVICE AND TIMLEY MAINTENANCE SHOULD BE COMPLETED.
-ANY MATERIAL TRACKED ONTO THE ROADWAY SHALL BE CLEANED UP IMMEDIATELY.

CONSTRUCTION ENTRANCE

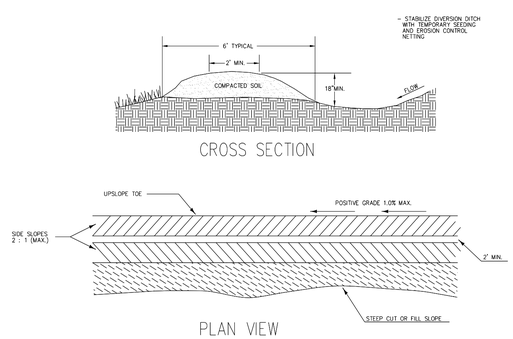

TEMPORARY DIVERSION DITCH

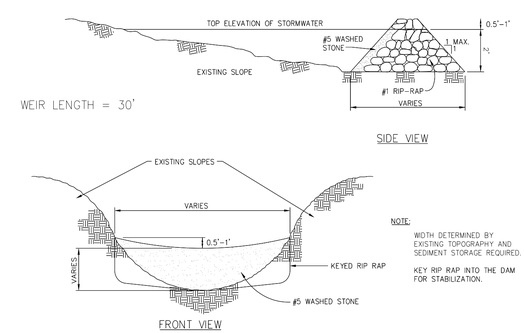

NOTE:

WIDTH DETERMINED BY EXISTING TOPOGRAPHY AND SEDIMENT STORAGE REQUIRED.

KEY RIP RAP INTO THE DAM FOR STABILIZATION.

CHECK DAM

PREPARED FOR
NORTH CAROLINA STATE UNIVERSITY
COLLEGE OF VETERINARY MEDICINE

TRANSLATIONAL RESEARCH FACILITY

revisions

building number

cadd file number

drawn by DFB

checked by MDA

date Issued for Construction 05/18/2023

project number NCSU CODE: 42124
ITEM: 305
WA 202207
SCO#: 21-24030-01A

D-104

EROSION DETAILS

sheet number: revision number:

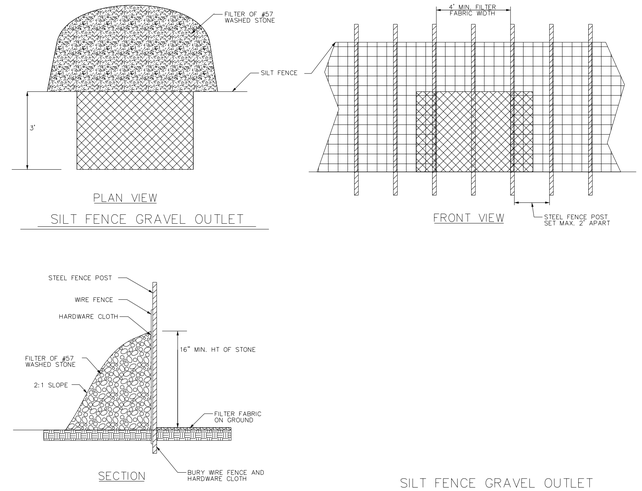

SILT FENCE GRAVEL OUTLET

TEMPORARY SEEDING SCHEDULE

SHOULDERS, SIDE DITCHES, SLOPES (MAX 3:1)

DATE	TYPE	PLANTING RATE
AUG 15 - NOV 1	TALL FESCUE	300 LBS / ACRE
NOV 1 - MAR 1	TALL FESCUE	300 LBS / ACRE
	& ABRUZZI RYE	25 LBS / ACRE
MAR 1 - APRIL 15	TALL FESCUE	300 LBS / ACRE
APRIL 15 - JUN 30	HULLED COMMON BERMUDA	25 LBS / ACRE
JUL 1 - AUG 15	TALL FESCUE AND	120 LBS / ACRE
	BROWNTOP MILLET	35 LBS / ACRE
	OR SORGHUM-SUDAN HYBRIDS	30 LBS /ACRE

SLOPES (3:1 TO 2:1)

MAR 1 - JUNE 1	TALL FESCUE	120 LBS / ACRE
(MAR 1 - JUN 30)	OR ADD WEEPING LOVEGRASS	10 LBS /ACRE
(MAR 1 - JUN 30)	OR ADD HULLED COMMON BERMUDAGRASS	25 LBS / ACRE
JUNE 1 - SEP 1	TALL FESCUE AND	120 LBS / ACRE
	BROWNTOP MILLET	35 LBS /ACRE
	OR SORGHUM-SUDAN HYBRIDS	30 LBS / ACRE
SEP 1 - MAR 1	TALL FESCUE	120 LBS / ACRE
(NOV 1 - MAR 1)	& ABRUZZI RYE	25 LBS / ACRE

CONSULT CONSERVATION ENGINEER OR SOIL CONSERVATION SERVICE FOR ADDITIONAL INFORMATION CONCERNING OTHER ALTERNATIVES FOR VEGETATION OF DENUDED AREAS. THE ABOVE VEGETATION RATES ARE THOSE WHICH DO WELL UNDER LOCAL CONDITIONS; OTHER SEEDING RATE COMBINATIONS ARE POSSIBLE.

**TEMPORARY - RESEED ACCORDING TO OPTIMUM SEASON FOR DESIRED PERMANENT VEGETATION. DO NOT ALLOW TEMPORARY COVER TO GROW OVER 12" IN HEIGHT BEFORE MOWING, OTHERWISE FESCUE MAY BE SHADED OUT.

Wagner Architecture, pllc
92 ELAM COURT
NEW HILL, NORTH CAROLINA 27562
TEL. (919) 612.5050

Kramer Engineering Services, pllc
100 S. Camellia St. Chapel Hill, NC 27516
TEL (919)933-3350
email: donna@kesplic.com
Firm license: P-1099

bennett&pless
formerly LHC STRUCTURAL ENGINEERS
5430 Wade Park Blvd, Suite 400
Raleigh, NC 27607
Tel 919 832 5587
Copyright 2022 • **Bennett & Pless, Inc.**
All Rights Reserved
B & P Job Number 22.08.048

N|V|5
NV5 ENGINEERS AND CONSULTANTS, INC.
3300 REGENCY PARKWAY, STE 100
CARY, NC 27518
P: 919.851.1912 www.NV5.com
NC License # F-1333
formerly CKVX Engineers • Consultants

NORTH CAROLINA PROFESSIONAL SEAL 22514 ENGINEER MICHAEL D. ALLEN
5/18/23

PREPARED FOR
NORTH CAROLINA STATE UNIVERSITY
COLLEGE OF VETERINARY MEDICINE

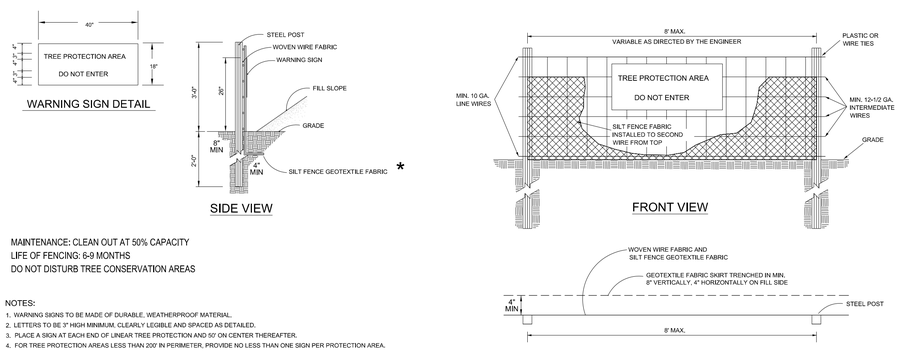

MAINTENANCE: CLEAN OUT AT 50% CAPACITY
LIFE OF FENCING: 6-9 MONTHS
DO NOT DISTURB TREE CONSERVATION AREAS

NOTES:
1. WARNING SIGNS TO BE MADE OF DURABLE, WEATHERPROOF MATERIAL.
2. LETTERS TO BE 3" HIGH MINIMUM. CLEARLY LEGIBLE AND SPACED AS DETAILED.
3. PLACE A SIGN AT EACH END OF LINEAR TREE PROTECTION AND 50' ON CENTER THEREAFTER.
4. FOR TREE PROTECTION AREAS LESS THAN 200' IN PERIMETER, PROVIDE NO LESS THAN ONE SIGN PER PROTECTION AREA.
5. ATTACH SIGNS SECURELY TO FENCE POSTS AND FABRIC.
6. MAINTAIN TREE PROTECTION FENCE THROUGHOUT DURATION OF PROJECT.
7. FLOW SHALL NOT RUN PARALLEL WITH THE FENCE.
8. END OF SILT FENCE NEEDS TO BE TURNED UPHILL.
9. SEE N.C. STATE DEQ PRACTICE STANDARDS & SPECIFICATIONS SEDIMENT FENCE SET FOR CONDITIONS WHERE PRACTICE APPLIES; PLANNING CONSIDERATIONS & DESIGN CRITERIA. (HOWEVER FLOW SHALL NOT RUN PARALELL WITH THE TOE OF THE FENCE).

SILT / TREE PROTECTION FENCE

PERMANENT SEEDING SCHEDULE

WARM SEASON GRASS SEED:
HYBRIDIZED BERMUDA
PLANTING RATE = 2 LBS PER 1,000 SF

COOL SEASON GRASS SEED:
TALL TYPE FESCUE
PLANTING RATE = 7 LBS PER 1,000 SF

PERMANENT SEEDBED PREPARATION

SEEDING DATES
EARLY SPRING: FEB 15 - MARCH 20
FALL: SEPT 1 - SEPT 30

SOIL AMENDMENTS:
APPLY LIME AND FERTILIZER ACCORDING TO SOIL TESTS, OR APPLY 3,000 OR 5,000 LB/ACRE GROUND AGRICULTURAL LIMESTONE (USE THE LOWER RATE ON SANDY SOILS) AND 1,000 LB/ACRE 10-10-10 FERTILIZER

MULCH:
APPLY 4,000 LB/ACRE GRAIN STRAW OR EQUIVALENT COVER OF ANOTHER SUITABLE MULCH. ANCHOR STRAW WITH NETTING, ROVING, OR BY CRIMPING WITH A MULCH ANCHORING TOOL. A DISK WITH BLADES SET NEARLY STRAIGHT CAN BE USED AS A MULCH ANCHORING TOOL.

MAINTENANCE:
IF GROWTH IS LESS THAN FULLY ADEQUATE, REFERTILIZE IN THE SECOND YEAR, ACCORDING TO SOIL TESTS OR TOPDRESS WITH 500 LB/ACRE 10-10-10 FERTILIZER. MOW AS NEEDED WHEN NEEDED WHEN SERICEA IS OMITTED FROM THE MIXTURE. RESEED, FERTILIZE AND MULCH DAMAGED AREAS IMMEDIATELY.

NOTES: REFER TO LANDSCAPE DRAWINGS AND SPECIFICATIONS FOR PLANTING REQUIREMENTS AND FOR PROPOSED LOCATIONS OF SOD AND SEED.

TEMPORARY SEEDBED PREPARATION

1. CHISEL COMPACTED AREAS AND SPREAD TOPSOIL 3 INCHES DEEP OVER ADVERSE SOIL CONDITIONS.
2. RIP THE ENTIRE AREA TO 6 INCHES DEPTH.
3. REMOVE ALL LOOSE ROCK, ROOTS AND OTHER OBSTRUCTIONS LEAVING SURFACE REASONABLY SMOOTH AND UNIFORM.
4. APPLY AGRICULTURAL LIME, FERTILIZER, AND SUPERPHOSPHATE UNIFORMLY AND MIX WITH SOIL (SEE BELOW*)
5. CONTINUE TILLAGE UNTIL A WELL PULVERIZED, FIRM REASONABLY UNIFORM SEEDBED IS PREPARED 4 TO 6 INCHES DEEP.
6. SEED ON A FRESHLY PREPARED DEEDBED AND COVER SEED SLIGHTLY WITH SEEDING EQUIPMENT OR CULTIPACK AFTER SEEDING.
7. MULCH IMMEDIATELY AFTER SEEDING AND ANCHOR MULCH.
8. INSPECT ALL DEEDED AREAS AND MAKE NECESSARY REPAIRS OR RESEED WITHIN THE PLANTING SEASON, IF POSSIBLE. IF STAND SHOULD IS OVER 60% DAMAGED, REESTABLISH FOLLOWING ORIGINAL LIME, FERTILIZER AND SEEDING RATES.
9. CONSULT CONSERVATION INSPECTOR ON MAINTENANCE TREATMENT AND FERTILIZATION AFTER PERMANENT COVER IS ESTABLISHED.

APPLY:
AGRICULTURAL LIMESTONE - 2 TONS / ACRE (3 TONS / ACRE IN CLAY SOILS)
FERTILIZER - 1,000 LBS / ACRE 10-10-10
SUPERPHOSPHATE - 500 LBS > / ACRE - 20% ANALYSIS
MULCH - 2 TONS / ACRE - SMALL GRAIN STRAW
TACK - ASPHALT EMULSION @ 400 GALLONS / ACRE

STOCKPILE DETAIL

1. Soil stabilization shall be achieved on any area of a site where land-disturbing activities have temporarily of permanently ceases according to the following schedule.
   A. All perimeter dikes, swales, ditches, perimeter slopes and all slopes steeper than 3 horizontal to 1 vertical (3:1) shall be provided temporary or permanent stabilization with ground cover as soon as practicable but in any event within 7 calendar days from the last land-disturbing activity.
   B. All other disturbed areas shall be provided temporary of permanent stabilization with ground cover as soon as practicable but in any event within 14 calendar days from the last land-disturbing activity.

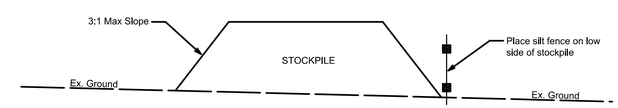

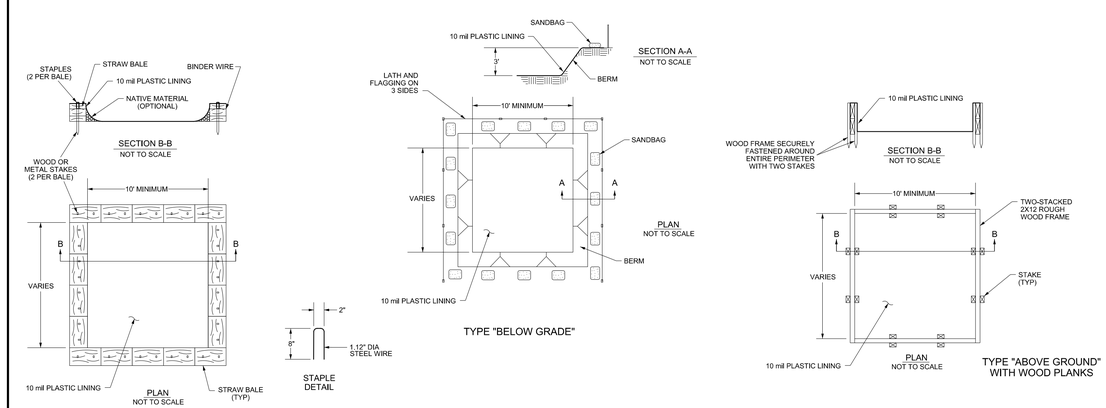

1. ACTUAL LAYOUT TO BE DETERMINED IN THE FIELD.
2. A CONCRETE WASHOUT SIGN SHALL BE INSTALLED WITHIN 30' OF THE TEMPORARY CONCRETE WASHOUT FACILITY.
3. MATERIALS USED TO CONSTRUCT TEMPORARY CONCRETE WASHOUT FACILITIES SHALL BE REMOVED FROM THE SITE OF THE WORK AND DISPOSED OF OR RECYCLED.
4. HOLES, DEPRESSIONS OR OTHER GROUND DISTURBANCE CAUSED BY THE REMOVAL OF THE TEMPORARY CONCRETE WASHOUT FACILITIES SHALL BE BACKFILLED, REPAIRED, AND STABILIZED TO PREVENT EROSION.

CONCRETE WASHOUT DETAIL (NTS)

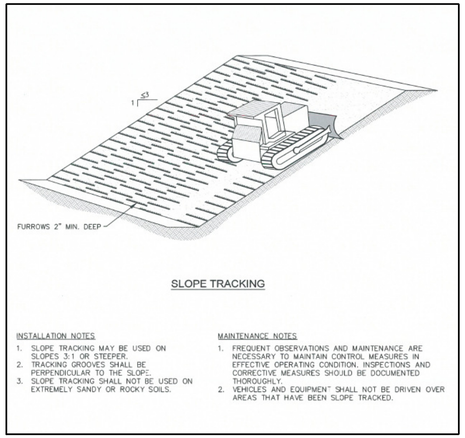

TRANSLATIONAL RESEARCH FACILITY

revisions

building number

cadd file number

drawn by DFB

checked by MDA

date Issued for Construction 05/18/2023

project number
NCSU CODE: 42124
ITEM: 305
WA 202207
SCO#: 21-24030-01A

D-105

EROSION DETAILS

sheet number: revision number:

"ALL CONSTRUCTION TO BE IN ACCORDANCE WITH ALL CITY OF RALEIGH AND / OR NCDOT STANDARDS AND SPECIFICATIONS"

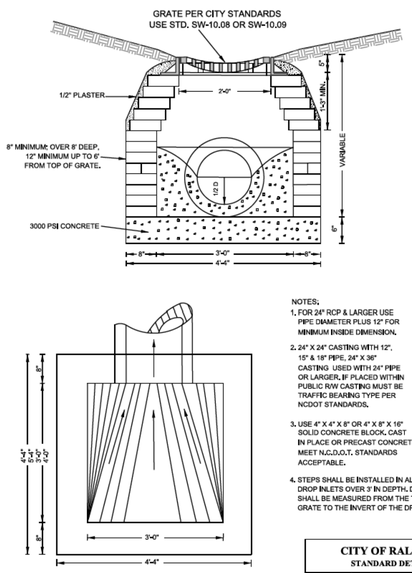

NOTES:
1. FOR 24" RCP & LARGER USE PIPE DIAMETER PLUS 12" FOR MINIMUM INSIDE DIMENSION.
2. 24" X 24" CASTING WITH 12", 15" & 18" PIPE, 24" X 36" CASTING USED WITH 24" PIPE OR LARGER. IF PLACED WITHIN PUBLIC R/W CASTING MUST BE TRAFFIC BEARING TYPE PER NCDOT STANDARDS.
3. USE 4" X 4" X 8" OR 4" X 8" X 16" SOLID CONCRETE BLOCK, CAST IN PLACE OR PRECAST CONCRETE TO MEET N.C.D.O.T. STANDARDS ACCEPTABLE.
4. STEPS SHALL BE INSTALLED IN ALL DROP INLETS OVER 3' IN DEPTH. DEPTH SHALL BE MEASURED FROM THE TOP OF GRATE TO THE INVERT OF THE DROP INLET.

CITY OF RALEIGH
STANDARD DETAIL

REVISIONS	DATE: 8/09/09	NOT TO SCALE
	STANDARD DROP INLET	
	SW-10.03	

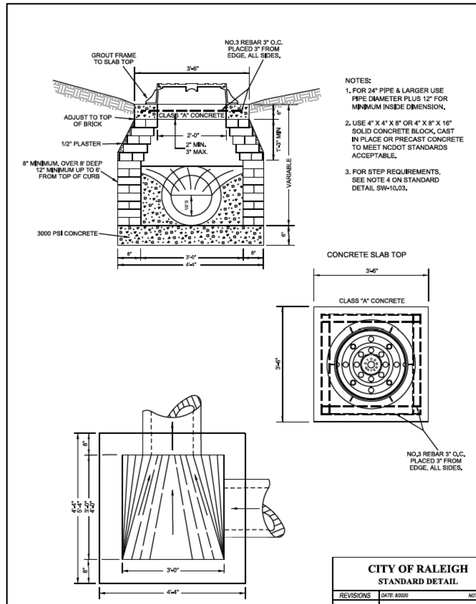

NOTES:
1. FOR 24" PIPE & LARGER USE PIPE DIAMETER PLUS 12" FOR MINIMUM INSIDE DIMENSION.
2. USE 4" X 4" X 8" OR 4" X 8" X 16" SOLID CONCRETE BLOCK, CAST IN PLACE OR PRECAST CONCRETE TO MEET NCDOT STANDARDS ACCEPTABLE.
3. FOR STEP REQUIREMENTS, SEE NOTE 4 ON STANDARD DETAIL SW-10.03.

CITY OF RALEIGH
STANDARD DETAIL

REVISIONS	DATE: 8/09/09	NOT TO SCALE
	STANDARD JUNCTION BOX	
	SW-10.04	

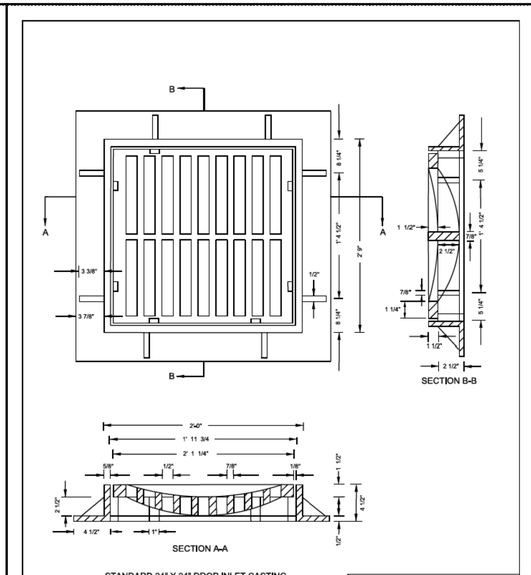

STANDARD 24" X 24" DROP INLET CASTING

CITY OF RALEIGH
STANDARD DETAIL

REVISIONS	DATE: 8/09/09	NOT TO SCALE
	DROP INLET CASTING	
	SW-10.08	

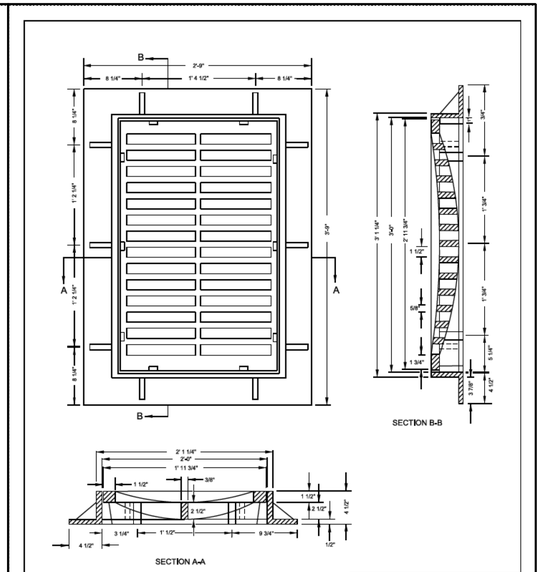

STANDARD 24" X 36" DROP INLET CASTING

CITY OF RALEIGH
STANDARD DETAIL

REVISIONS	DATE: 8/09/09	NOT TO SCALE
	STANDARD DROP INLET CASTING	
	SW-10.09	

COVER FOR PIPES WITHIN THE R.O.W. MINIMUM PIPE CLEARANCE FROM INVERT TO SUBGRADE	
PIPE SIZE (in)	CLEARANCE DISTANCE (ft)
15	2.4
18	2.7
24	3.3
30	3.6
36	4.4
42	4.9
48	5.4
54	6.0
60	6.5
66	7.0
72	7.6

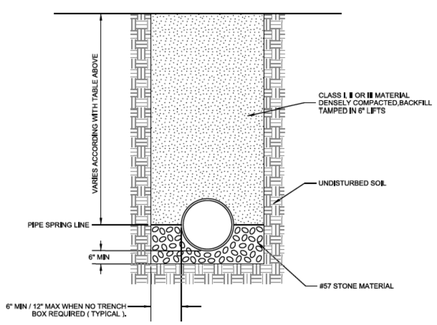

CITY OF RALEIGH
STANDARD DETAIL

REVISIONS	DATE: 8/09/09	NOT TO SCALE
	BEDDING FOR STORMWATER RCP PIPES	
	SW-10.14	

Wagner Architecture, pllc
92 ELAM COURT
NEW HILL, NORTH CAROLINA 27562
TEL. (919) 612.5050

Kramer Engineering Services, pllc
100 S. Camellia St. Chapel Hill, NC 27516
TEL (919)933-3350
email: donna@kesplic.com
Firm license: P-1099

bennett&pless
formerly LHC STRUCTURAL ENGINEERS
5430 Wade Park Blvd, Suite 400
Raleigh, NC 27607
Tel 919 832 5587

Copyright 2022 • **Bennett & Pless, Inc.**
All Rights Reserved

B & P Job Number 22.08.048

NV5 ENGINEERS AND CONSULTANTS, INC.
3300 REGENCY PARKWAY, STE 100
CARY, NC 27518
P: 919.851.1912 www.NV5.com
NC License # F-1333
formerly OLVA Engineers + Consultants

NORTH CAROLINA PROFESSIONAL SEAL 22514 ENGINEER MICHAEL D. ALLEN
5/18/23

PREPARED FOR
NORTH CAROLINA
STATE UNIVERSITY
COLLEGE OF VETERINARY
MEDICINE

TRANSLATIONAL
RESEARCH FACILITY

revisions

building number

cadd file number

drawn by DFB

checked by MDA

date Issued for Construction 05/18/2023

project number
NCSU CODE: 42124
ITEM: 305
WA 202207
SCO#: 21-24030-01A

D-106

STORMWATER
DETAILS

sheet number: revision number:

DESIGN CRITERIA

LOCATION: RALEIGH, NORTH CAROLINA
BUILDING CODE: 2018 NORTH CAROLINA BUILDING CODE
RISK CATEGORY II
BASIC LATERAL FORCE RESISTING SYSTEM:
INTERMEDIATE REINFORCED MASONRY SHEAR WALLS

DESIGN LIVE LOADS

ROOF	20 PSF
GROUND FLOOR	100 PSF
MECHANICAL PLATFORM	150 PSF
HOIST	2000 LBS

SUPERIMPOSED DEAD LOADS

SUSPENDED CEILING + MEP	10 PSF
ROOFING ALLOWANCE	10 PSF

ROOF SNOW LOAD
P_g = 15 PSF
C_e = 0.9
I_s = 1.0
C_t = 1.0
P_f = 9.5 PSF
P_{dn} = 15 PSF

RAIN ON SNOW 9.5 PSF

WIND LOAD
V = 115 MPH (3 SECOND GUST)
EXPOSURE C
DESIGN (DESIGN/ULTIMATE) WIND BASE SHEAR:
V_x = 40k V_y = 40k
INTERNAL PRESSURE COEFFICIENT = ±0.18
COMPONENTS & CLADDING PER ASCE 7
FIGURES 30.5-1

ULT. WIND LOADS ON COMPONENTS & CLADDING FOR GIVEN TRIBUTARY AREAS (psf)

	ZONE	10 SQ FT	20 SQ FT	50 SQ FT	100 SQ FT	500 SQ FT
ROOF	1	+17.4/-27.6	+16.0/-26.8	+16.0/-25.8	+16.0/-25.0	+16.0/-25.0
	2	+17.4/-48.0	+16.0/-44.2	+16.0/-39.1	+16.0/-35.2	+16.0/-35.2
	3	+17.4/-71.0	+16.0/-66.4	+16.0/-60.3	+16.0/-55.7	+16.0/-55.7
ROOF OHANG	2	-	-	-	-	-
	3	-	-	-	-	-
WALL	4	+30.1/-32.8	+28.8/-31.3	+27.0/-29.5	+25.6/-28.2	+22.5/-25.0
	5	+30.1/-40.3	+28.8/-37.6	+27.0/-34.0	+25.6/-31.3	+22.5/-25.0

1. DETERMINE WIND LOADS ON COMPONENTS IN ACCORDANCE WITH THE NCSBC AND ASCE-7 OR WITH THIS TABLE. REFERENCE ASCE 7-10 FIGURE 30.5-1. TRIBUTARY AREA = GREATER OF LxW OR LxL/3.
2. DESIGN FOR ALLOWABLE CAPACITY USING LOADS FROM ASCE-7 OR FROM THIS TABLE.
3. DEFLECTIONS MAY BE CALCULATED BASED ON 70% OF THESE LOADS.
4. POSITIVE PRESSURES ARE DIRECTED TOWARD THE INTERIOR. NEGATIVE LOADS ARE DIRECTED AWAY FROM THE INTERIOR. NEGATIVE ROOF LOADS ARE UPLIFT LOADS.
5. NET UPLIFT IS EQUAL TO THE GROSS UPLIFT LOAD CALCULATED FROM ASCE-7 OR FROM THIS TABLE MINUS 60% OF THE ROOFING ALLOWANCE SUMPERIMPOSED DEAD LOAD SHOWN ON S100

SEISMIC CRITERIA

SEISMIC DESIGN VALUES DETERMINED UTILIZING 2008 USGS HAZARD DATA		
SPECTRAL RESPONSE ACCELERATIONS	S_s = 0.155g	S_1 = 0.077g
SITE CLASS D		
SPECTRAL RESPONSE COEFFICIENTS	S_{ds} = 0.165g	S_{d1} = 0.123g
SEISMIC DESIGN CATEGORY B		
DESIGN ULTIMATE SEISMIC BASE SHEAR:	V_y = 30k	V_y = 30k
IMPORTANCE FACTOR	I_e = 1.0	
DESIGN SEISMIC RESPONSE COEFFICIENT	C_s = 0.047	
RESPONSE MODIFICATION FACTOR	R = 3.5	

GENERAL NOTES

GENERAL

1. DESIGN, FURNISH, AND INSTALL TEMPORARY SHORING, BRACING, AND OTHER TEMPORARY SUPPORTS REQUIRED FOR CONSTRUCTING THE STRUCTURE AND TO MAINTAIN THE STABILITY THROUGHOUT ALL PHASES OF CONSTRUCTION UNTIL THE STRUCTURE IS COMPLETED. ALL TEMPORARY SUPPORTS ARE TO BE REMOVED UNLESS NOTED OTHERWISE.
2. USE STRUCTURAL DRAWINGS IN CONJUNCTION WITH THE ARCHITECTURAL DRAWINGS AND THE DRAWINGS OF OTHER TRADES.
3. COORDINATE WITH OTHER TRADES THE ACTUAL LOCATIONS AND SIZES OF OPENINGS AND PENETRATIONS REQUIRED BY THEIR WORK.
4. COORDINATE WITH OTHER TRADES THE ACTUAL LOCATIONS AND ELEVATIONS OF BURIED SERVICES PASSING NEAR FOUNDATIONS. UNDERGROUND SERVICES WHICH PASS BENEATH WALL FOOTINGS SHALL HAVE AT LEAST 12" OF CLEARANCE BELOW THE BOTTOM OF THE FOOTING. WHERE THIS IS NOT ACHIEVED, EITHER STEP THE FOOTING DOWN BENEATH THE SERVICE OR INSTALL A STEEL PIPE SLEEVE FOR THE SERVICE TO PASS THROUGH. SLEEVES ARE FURNISHED AND INSTALLED BY THE TRADE INSTALLING THE SERVICE. NO SERVICE IS TO BE INSTALLED BENEATH COLUMN FOOTINGS UNLESS APPROVED BY THE ARCHITECT.
5. COORDINATE WITH OTHER TRADES THE ACTUAL LOCATIONS AND TYPES OF ATTACHMENTS AND ANCHORS THAT ARE REQUIRED BY THE TRADES TO FASTEN THEIR WORK TO THE STRUCTURE.
6. MODIFICATIONS TO STRUCTURAL COMPONENTS AND INSTALLATION OF PENETRATIONS THROUGH STRUCTURAL MEMBERS ARE NOT PERMITTED WITHOUT PRIOR APPROVAL OF THE ARCHITECT.
7. VERIFY ACTUAL DIMENSIONS, ELEVATIONS, AND CONDITIONS OF EXISTING CONSTRUCTION PRIOR TO PROCEEDING WITH WORK OR ORDERING MATERIALS WHICH COULD BE AFFECTED BY EXISTING CONDITIONS.

FOUNDATIONS

1. THE FOUNDATION DESIGN IS BASED ON THE REPORT OF SUBSURFACE INVESTIGATION PREPARED BY ECS SOUTHEAST TITLED "GEOTECHNICAL ENGINEERING REPORT TRANSLATIONAL RESEARCH FACILITY NCSU CODE 42124" DATED SEPTEMBER 22, 2022.
2. ALL FOOTINGS SHALL BE PLACED ON UNDISTURBED SOIL OR COMPACTED STRUCTURAL FILL. NET ALLOWABLE BEARING PRESSURE IS 2500 PSF.
3. ALL STRUCTURAL EARTH FILL SHALL BE PLACED IN LOOSE LIFTS NOT EXCEEDING 8 INCHES AND BE COMPACTED TO AT LEAST 95 PERCENT OF THE SOIL'S STANDARD PROCTOR MAXIMUM DRY DENSITY AS DETERMINED BY ASTM D-698. THE TOP 12 INCHES OF FILL IN LOAD BEARING AREAS SHOULD BE COMPACTED TO AT LEAST 98 PERCENT OF THE STANDARD PROCTOR MAXIMUM DRY DENSITY. ALL STRUCTURAL FILL MATERIAL SHALL BE COMPACTED AT A MOISTURE CONTENT WITHIN 3 PERCENT OF THE SOIL'S OPTIMUM MOISTURE CONTENT (AS DETERMINED BY ASTM D-698). ALL STRUCTURAL FILL SHALL BE PLACED UNDER THE FULL-TIME CONTROL OF AN ENGINEERING TECHNICIAN WORKING UNDER THE DIRECTION OF A GEOTECHNICAL ENGINEER. THE PLACEMENT AND COMPACTION OF ALL FILL MATERIAL SHALL BE MONITORED AND TESTED IN ORDER TO CONFIRM THAT THE RECOMMENDED DEGREE OF COMPACTION IS BEING OBTAINED. IF AN IMPORTED STRUCTURAL FILL IS REQUIRED TO COMPLETE SITE GRADING, IT SHALL BE APPROVED BY THE PROJECT GEOTECHNICAL ENGINEER PRIOR TO USE. IMPORTED STRUCTURAL FILL SHOULD TYPICALLY CONSIST OF LOW PLASTICITY SOIL (LL<50, PI<25), HAVE A STANDARD PROCTOR MAXIMUM DRY DENSITY OF AT LEAST 100 PCF, AND BE FREE OF ORGANIC AND OTHER DELETERIOUS MATERIALS. IF CLEAN SAND FILL IS NECESSARY TO REPLACE LOWER CONSISTENCY SOILS IN THE BUILDING AREA, THE SAND SHOULD CONTAIN LESS THAN 10 TO 12 PERCENT FINES.
4. FINISHED SUBGRADES IN BUILDING AREAS RECEIVING MORE THAN 7 FEET OF FILL SHALL BE MONITORED FOR SETTLEMENT DUE TO THE FILL LOADING. SETTLEMENT MONUMENTS SHOULD BE INSTALLED AT THE TOP OF THE FILL IMMEDIATELY UPON FILL COMPLETION WITH SETTLEMENT MEASUREMENTS TAKEN AT LEAST TWO PER WEEK UNTIL SETTLEMENTS HAVE STABILIZED. CONSTRUCTION OF BUILDING FOUNDATIONS AND PAVEMENTS SHALL NOT OCCUR UNTIL IT IS CONFIRMED THAT SETTLEMENT DUE TO NEW FILL HAS STABILIZED.
5. NO FOUNDATIONS SHALL BE PLACED IN WATER OR ON FROZEN GROUND.
6. ALL FOOTING EXCAVATIONS ARE TO BE FINISHED BY HAND.
7. ALL FINISHED FOUNDATION EXCAVATIONS SHALL BE INSPECTED AND APPROVED BY THE ARCHITECT OR HIS DESIGNATE BEFORE ANY CONCRETE IS PLACED.
8. UNLESS OTHERWISE NOTED, ALL FOOTINGS AND PILASTERS SHALL BE CENTERED UNDER SUPPORTED MEMBERS.
9. DOWELS FROM FOUNDATIONS INTO PIERS, COLUMNS, BUTTRESSES, OR WALLS ABOVE SHALL BE THE SAME SIZE AND NUMBER AS VERTICAL REINFORCEMENT IN PIERS, COLUMNS, BUTTRESSES, OR WALLS ABOVE, EXCEPT AS OTHERWISE SHOWN ON THE DRAWINGS.
10. CAREFULLY FOLLOW THE REQUIREMENTS OF THE SPECIFICATIONS FOR BACKFILL UNDER OR ADJACENT TO ANY PORTION OF THE BUILDING.
11. WHERE FOUNDATION ELEMENTS ARE TO HAVE FILL ON BOTH SIDES, EACH SIDE SHALL BE FILLED SIMULTANEOUSLY, MAINTAINING A COMMON ELEVATION.
12. COORDINATE UNDERFLOOR DRAIN REQUIREMENTS WITH ARCHITECTURAL AND MECHANICAL DRAWINGS AND THE REQUIREMENTS OF THE GEOTECHNICAL ENGINEER.
13. CONTRACTOR SHALL PROVIDE CONTINUOUS CONTROL OF SURFACE AND UNDERGROUND WATER AS REQUIRED DURING CONSTRUCTION SUCH THAT THE WORK IS DONE IN THE DRY.

CAST-IN-PLACE

1. MATERIALS
   - A. PORTLAND CEMENT: ASTM C150, TYPE I.
   - B. FLY ASH: ASTM A618, CLASS C OR F.
   - C. NORMAL-WEIGHT AGGREGATE: ASTM ASTM C33, CLASS 3M.
   - D. REINFORCING STEEL: ASTM A615 GRADE 60.
   - E. WELDED WIRE FABRIC: ASTM A185, FLAT SHEETS.
   - F. UNDER-SLAB DRAINAGEFILL: 4" WASHED CRUSHED STONE, MAXIMUM AGGREGATE SIZE OF 3/4".
   - G. VAPOR BARRIER: ASTM E1745, CLASS B; FIVE-PLY, NYLON OR POLYESTER CHORD, 15 MILS THICKNESS.
   - H. WATERSTOP: SELF EXPANDING.
2. CONCRETE MIXES
   - A. FOOTINGS & GRADE BEAMS: 3000 PSI NW
   - B. SLABS-ON-GRADE: 3000 PSI NW.
   - C. SLABS-ON-GRADE EXPOSED TO WEATHER: 4500 PSI NW, AIR-ENTRAINED.
   - D. SUPPORTED SLABS ON STEEL DECK: 3500 PSI LW
3. PERFORM CONCRETE WORK IN ACCORDANCE WITH ACI 318 AND ACI 301.
4. PROVIDE CONCRETE COVER AS FOLLOWS:
   - A. CONCRETE CAST AGAINST AND PERMANENTLY EXPOSED TO EARTH: 3".
   - B. CONCRETE EXPOSED TO EARTH OR WEATHER:
     - a. #5 OR SMALLER: 1 1/2".
     - b. #6 OR LARGER: 2".
   - C. CONCRETE NOT EXPOSED TO EARTH OR WEATHER:
     - a. SLABS, WALLS, JOIST: 3/4"
     - b. BEAMS, COLUMNS: 1 1/2" TO PRIMARY REINFORCEMENT, TIES, STIRRUPS, OR SPIRALS.
5. PROVIDE CONTINUOUS REINFORCEMENT WHEREVER POSSIBLE. SPLICE ONLY AS SHOWN OR APPROVED. MINIMUM LAP LENGTHS, EXPRESSED IN NUMBER OF BAR DIAMETERS, SHALL BE AS FOLLOWS:

BAR SIZE	NORMAL WT. CONCRETE STRENGTH, fc (psi)		
	3000	4000	5000
#6 OR SMALLER	57 DIA.	49 DIA.	44 DIA.
#7 OR LARGER	71 DIA.	62 DIA.	55 DIA.

MULTIPLY THE ABOVE LENGTHS BY 1.3 FOR TOP BARS AND BY 1.3 FOR LIGHTWEIGHT CONCRETE. WHERE BARS OF UNEQUAL DIAMETER ARE LAPPED, USE THE LAP LENGTH OF THE SMALLER BAR. THE ABOVE LENGTHS ARE CLASS "B" TENSION LAP SPLICES BASED ON GRADE 60 BARS WITH A COVER OF AT LEAST 1 BAR DIA. AND SPACING AT LEAST 3 BAR DIA. LAP LENGTHS SHALL BE INCREASED IN ACCORDANCE WITH ACI 318 IF COVER IS LESS THAN 1 BAR DIA. OR SPACING IS LESS THAN 3 BAR DIA.

CAST-IN-PLACE (CONT.)

6. ACCURATELY INSTALL AND PROPERLY SECURE ANCHORS, BEARING PLATES, SLEEVES, AND OTHER EMBEDDED ITEMS.
7. ACCURATELY LOCATE AND BLOCK OUT OPENINGS AND PENETRATIONS.
8. COORDINATE WITH OTHER TRADES FOR ANCHORS, EMBEDDED ITEMS, SLEEVES, AND PENETRATIONS REQUIRED AND/OR FURNISHED BY THE OTHER TRADES.
9. PROVIDE CONTRACTION JOINTS IN SLABS-ON-GRADE WHERE INDICATED ON THE PLANS. PROVIDE A JOINT DEPTH EQUAL TO AT LEAST 25% OF THE SLAB THICKNESS.
10. INSTALL AND SEAL VAPOR BARRIER IN ACCORDANCE WITH ASTM E1643 AND MANUFACTURER'S INSTRUCTIONS. LAP JOINTS 6" AND SEAL WITH MANUFACTURER'S RECOMMENDED TAPE.
11. FLOOR FINISHES:
    - A. FLOAT FINISH: SURFACES TO RECEIVE A TROWEL FINISH, TO BE COVERED WITH FLUID-APPLIED OR SHEET WATERPROOFING, OR TO BE COVERED WITH BUILT-UP OR MEMBRANE ROOFING.
    - B. TROWEL FINISH: SURFACES EXPOSED TO VIEW OR COVERED WITH RESILIENT FLOORING, CARPET, WOOD FLOORING, PAINT, SEALER, OR OTHER THIN FILM FINISH.
    - C. TROWEL AND FINE-BROOM FINISH: SURFACES TO BE COVERED WITH QUARRY OR CERAMIC TILE INSTALLED BY THE THIN-SET OR THICK-SET METHOD.
    - D. BROOM FINISH: EXTERIOR CONCRETE PLATFORMS, STEPS, AND RAMPS
12. FLOOR FINISH TOLERANCE:
    - A. SLABS TO RECEIVE TROWEL OR TROWEL AND FINE-BROOM FINISH:
      - a. SPECIFIED OVERALL VALUES: FF=25 / FL=20.
      - b. MINIMUM LOCAL VALUES: FF=17 / FL=15.
13. FINISH SLABS FLAT AND LEVEL. PROVIDE POSITIVE SLOPE THROUGHOUT WHERE NOTED.
14. NO CONDUIT OR PIPE MAY BE RUN WITHIN STRUCTURAL CONCRETE MEMBERS EXCEPT WHERE INDICATED.

STRUCTURAL MASONRY

1. SCOPE: THESE NOTES APPLY TO LOAD BEARING MASONRY OR MASONRY THAT IS PART OF THE LATERAL LOAD RESISTING SYSTEM. SEE ARCHITECTURAL FOR OTHER MASONRY.
2. ALL MASONRY WORK SHALL CONFORM TO THE "BUILDING CODE REQUIREMENTS FOR MASONRY STRUCTURES" (ACI530-13) AND "SPECIFICATIONS FOR MASONRY STRUCTURES" (ACI530.1-13)
3. MATERIALS
   - A. CONCRETE MASONRY UNITS: ASTM C90, 2000 PSI MIN. UNIT STRENGTH.
   - B. MORTAR: ASTM C270, PROPORTION SPECIFICATION, TYPE S.
   - C. GROUT: ASTM C476; SLUMP = 8" TO 11". COMPRESSIVE STRENGTH f'c = 3000 PSI
   - D. MASONRY f'm = 2000 PSI.
   - E. REINFORCING STEEL: ASTM A615, GRADE 60. Fs = 32,000 PSI
4. LAP REINFORCING AS FOLLOWS, UNLESS NOTED OTHERWISE.

#3	1'-6"	#7	5'-6"
#4	2'-0"	#8	8'-6"
#5	2'-6"	#9	10'-9"
#6	4'-0"	#10	14'-0"

5. INSTALL REINFORCING IN THE CENTER OF CELLS UNLESS INDICATED OTHERWISE.
6. ADEQUATELY SECURE REINFORCING TO PREVENT MOVEMENT PRIOR TO GROUT FILL.
7. GROUT ALL CELLS OF MASONRY UNITS INSTALLED BELOW FINAL GRADE.
8. ABOVE GRADE, GROUT ONLY REINFORCED CELLS UNLESS INDICATED OTHERWISE.

STRUCTURAL STEEL

1. MATERIALS
   - A. STRUCTURAL STEEL WIDE FLANGE SHAPES: ASTM A992
   - B. OTHER STRUCTURAL STEEL ROLLED SHAPES: ASTM A36
   - C. RECTANGULAR OR ROUND HSS: ASTM A500, GR B
   - D. STEEL PLATE: ASTM A36
   - E. HIGH STRENGTH BOLTS: ASTM A325
   - F. ANCHOR RODS: ASTM F1554, GRADE 36
   - G. WELD ELECTRODE: IN ACCORDANCE WITH AWS D1.1
2. FABRICATE AND ERECT STEEL IN ACCORDANCE WITH THE AISC SPECIFICATION. PERFORM SHOP AND FIELD WELDING IN ACCORDANCE WITH AWS D1.1 WITH CURRENTLY CERTIFIED WELDERS.
3. UNLESS NOTED OTHERWISE, ALL BOLTED CONNECTIONS ARE MADE WITH 3/4" HIGH STRENGTH BOLTS INSTALLED SNUG TIGHT.
4. DESIGN OF BEAM CONNECTIONS ARE DELEGATED TO THE STEEL FABRICATOR. SHOP STANDARD SIMPLE SHEAR CONNECTIONS WILL BE PERMITTED. SERVICE LEVEL (UNFACTORED) BEAM REACTIONS ARE SHOWN ON THE FRAMING PLAN. WHERE NOT SHOWN DESIGN FOR MINIMUM END REACTION OF 10 KIPS FOR A SHEAR CONNECTION AND 10 KIP-FT FOR A MOMENT CONNECTION. THE EOR WILL REVIEW AND APPROVE THE PROPOSED CONNECTION.
5. STEEL PREPARATION AND FINISH:
   - A. INTERIOR FRAMING: SSPC SP3 POWER TOOL CLEANING; PAINT 23 LATEX PRIMER FOR STEEL SURFACES.
   - B. EXPOSED INTERIOR FRAMING: SSPC SP3 POWER TOOL CLEANING; PAINT 23 LATEX PRIMER FOR STEEL SURFACES. APPLY TOPCOAT OF PAINT PER ARCHITECTURAL SPECS.
   - C. BRICK RELIEF ANGLES AND LINTELS: SSPC SP6 COMMERCIAL BLAST CLEANING; HOT DIPPED GALVANIZED.
6. FOR BEAMS NOT MEETING THE MINIMUM SIZE REQUIREMENT OF THE UL ASSEMBLY, THE CONTRACTOR SHALL PROVIDE FOR APPROVAL W/D CALCULATIONS AS REQUIRED IN SECTION 721.5.2.2 OF THE NC STATE BUILDING CODE.

STEEL DECK

1. MATERIALS
   - A. COMPOSITE STEEL FLOOR DECK: 3" DEEP, 18 GAGE, ASTM A653, SS, GRADE 50, G60 GALVANIZED COATING.
   - B. STEEL ROOF DECK: 1 1/2" DEEP, TYPE B (WIDE RIB), 20 GAGE, ASTM A653, SS, GRADE 50, G60 GALVANIZED COATING.
   - C. POUR STOPS, GIRDER FILLERS, COLUMN, END, AND Z CLOSURES, COVER PLATES, OTHER STEEL SHEET DECKING ACCESSORIES: THICKNESS AS REQUIRED FOR STRENGTH BUT NOT LESS THAN THE DECKING THICKNESS; OF THE SAME MATERIAL AND FINISH AS THE DECKING MATERIAL.
   - D. MECHANICAL FASTENERS: CORROSION RESISTANT SELF-DRILLING CARBON STEEL SCREWS, #10 MINIMUM DIAMETER.
   - E. WELD ELECTRODE: IN ACCORDANCE WITH AWS D1.3.
2. FABRICATE AND ERECT DECK IN ACCORDANCE WITH SDI PUBLICATION NO. 29. PERFORM WELDING IN ACCORDANCE WITH AWS D1.3 WITH CURRENTLY CERTIFIED WELDERS.
3. CUT AND NEATLY FIT DECK AROUND OPENINGS AND OTHER WORK PROJECTING THROUGH THE DECK.
4. PROVIDE ADDITIONAL SUPPORT AND CLOSURE PIECES AS REQUIRED FOR STRENGTH, CONTINUITY OF DECK, AND SUPPORT OF OTHER WORK
5. COMPOSITE FLOOR DECK ATTACHMENT
   - A. AT SUPPORTS, WELD EDGE AND INTERIOR RIBS OF DECK UNITS AT EACH SUPPORT AT AN AVERAGE SPACING OF 12" (18" MAXIMUM) WITH 5/8" NOMINAL DIAMETER PUDDLE WELDS.
   - B. AT PREMIER EDGES BETWEEN SUPPORTS, FASTEN WITH 5/8" DIAMETER PUDDLE WELDS SPACED A MAXIMUM OF 24" APART.
   - C. AT SIDE LAPS, INSTALL #10 SELF DRILLING SCREWS A MAXIMUM OF 36 INCHES APART.
   - D. END BEARING: 1 1/2" MINIMUM
   - E. END JOINTS: BUTTED OR LAPPED.
6. 1 1/2" DEEP ROOF DECK ATTACHMENT TO STRUCTURAL STEEL
   - A. FASTEN ROOF DECK PANELS TO STEEL SUPPORTING MEMBERS WITH FASTEN SIDE LAPS WITH #10 SELF-DRILLING SCREWS
   - B. FASTEN EDGES AND INTERIOR RIBS OF DECK UNITS TO EACH SUPPORTING MEMBER WITH A MINIMUM OF THREE #10 SELF-DRILLING SCREWSPER DECK UNIT.
   - C. SCREW SPACING: SEE ROOF DECK ATTACHMENT PLAN ON S010
   - D. FASTEN SIDE LAPS WITH #10 SELF-DRILLING SCREWS. SEE ROOF DECK ATTACHMENT PLAN ON S010. DECK SPANS 36" OR LESS DO NOT REQUIRE SIDE LAP FASTENERS.
   - E. END BEARING: 1 1/2" MINIMUM.
   - F. END JOINTS: LAPPED
   - G. DO NOT HANG ANYTHING FROM THE ROOF DECK.

CONCRETE AND MASONRY ANCHORS

1. EXPANSION ANCHORS: WEDGE TYPE, CARBON STEEL, ZINC PLATED OR SIMILARLY TREATED FOR CORROSION RESISTANCE. INSTALL IN STRICT ACCORDANCE WITH THE MANUFACTURER'S INSTRUCTIONS.
2. EXPANSION ANCHORS SHALL HAVE BEEN TESTED AND QUALIFIED FOR USE IN ACCORDANCE WITH ACI 355.2 AND ICC-ES ACI 193 FOR USE IN CONCRETE APPLICATIONS, OR ICC-ES ACO1 FOR USE IN MASONRY APPLICATIONS.
3. ADHESIVE ANCHORS: CARBON STEEL, A36 MATERIAL OR EQUIVALENT, WITH A TWO-PART, PREPACKAGED AND PREMEASURED ADHESIVE READY FOR INJECTION INTO THE ANCHOR HOLE. INSTALL ACCORDANCE WITH THE MANUFACTURER'S INSTRUCTIONS.
4. ADHESIVE ANCHORS SHALL HAVE BEEN TESTED AND QUALIFIED FOR USE IN ACCORDANCE WITH ACI 355.4 AND ICC-ES AC308 FOR USE IN CONCRETE APPLICATION, OR ICC-ES AC58 FOR USE IN MASONRY APPLICATIONS.

POST-INSTALLED ANCHORS

UNLESS OTHERWISE INDICATED ON PLANS, POST-INSTALLED ANCHORS SHALL CONSIST OF THE FOLLOWING ANCHOR TYPES, OR APPROVED EQUAL:

	ADHESIVE ANCHOR	MECHANICAL ANCHOR
SOLID CONCRETE	HILTI HY 200 SAFE SET HILTI RE 500 SD DEWALT/POWERS AC200+ DEWALT/POWERS PURE110+	HILTI KWIK HUS EZ HILTI KWIK BOLT TZ DEWALT/POWERS POWER-STUD+SD2 DEWALT/POWERS SCREW-BOLT+
GROUTED MASONRY	HILTI HY 270 DEWALT/POWERS AC100+GOLD	HILTI KWIK BOLT 3 DEWALT/POWERS POWER-STUD+SD1
HOLLOW MASONRY OR BRICK	HILTI HY 270 WITH APPROPRIATE SCREEN TUBE DEWALT/POWERS AC100+GOLD	HILTI HLC SLEEVE ANCHOR DEWALT/POWERS LOK-BOLT AS

1. SUBSTITUTION REQUESTS FOR ALTERNATIVE PRODUCTS MUST BE APPROVED IN WRITING BY THE STRUCTURAL ENGINEER OF RECORD PRIOR TO USE. CONTRACTOR SHALL PROVIDE CALCULATIONS DEMONSTRATING THAT THE SUBSTITUTED PRODUCT IS CAPABLE OF ACHIEVING THE PERFORMANCE.
2. INSTALL ANCHORS PER THE MANUFACTURED INSTRUCTIONS, AS INCLUDED IN THE ANCHOR PACKAGE.
3. ADHESIVE ANCHORS INSTALLED IN HORIZONTAL TO VERTICALLY OVERHEAD ORIENTATION TO SUPPORT SUSTAINED TENSION LOADS SHALL BE DONE BY A CERTIFIED ADHESIVE ANCHOR INSTALLER (AAI) AS CERTIFIED THROUGH ACI/CRSI (ACI 318-11 D.9.2.2). PROOF OF CURRENT CERTIFICATION SHALL BE SUBMITTED THE ENGINEER FOR APPROVAL PRIOR TO COMMENCEMENT OF INSTALLATION.
4. ADHESIVE ANCHORS MUST BE INSTALLED IN CONCRETE AGED A MINIMUM OF 21 DAYS (ACI 318-11 D.2.2).
5. ADHESIVE ANCHORS SHALL HAVE BEEN TESTED AND QUALIFIED FOR USE IN ACCORDANCE WITH ACI 355.4 AND ICC-ES AC308 FOR USE IN CONCRETE APPLICATION, OR ICC-ES AC58 FOR USE IN MASONRY APPLICATIONS.

Wagner Architecture, pllc
92 ELAM COURT
NEW HILL, NORTH CAROLINA 27562
TEL. (919) 612.5050

Kramer Engineering Services, pllc
5517 Cascade Dr., Chapel Hill, NC 27514
TEL (919)933-3350
email: donna@kesplic.com
Firm license: P-1099

bennett&pless
formerly LHC STRUCTURAL ENGINEERS
5430 Wade Park Blvd, Suite 400
Raleigh, NC 27607
Tel 919 832 5587

Copyright 2022 • **Bennett & Pless, Inc.**
All Rights Reserved

B & P Job Number 22.08.048

N|V|5
NV5 ENGINEERS AND CONSULTANTS, INC.
3300 REGENCY PARKWAY, STE 100
CARY, NC 27518
P: 919 851.1912 www.NV5.com
NC License #F-1333
formerly OLH Engineers + Consultants

NORTH CAROLINA PROFESSIONAL SEAL 028237 ENGINEER ROBERT J. STEVENSON
5/18/23

PREPARED FOR
NORTH CAROLINA
STATE UNIVERSITY
COLLEGE OF VETERINARY
MEDICINE

TRUE NORTH
PLAN NORTH

TRANSLATIONAL
RESEARCH FACILITY

revisions

building number

cadd file number

drawn by BM

checked by RS

date Issued for Construction - 05/18/23

project number
NCSU CODE: 42124
ITEM: 305
WA 202207
SCO#: 21-24030-01

GENERAL NOTES

S001

sheet number: revision number:

Wagner Architecture, pllc
92 ELAM COURT
NEW HILL, NORTH CAROLINA 27562
TEL. (919) 612.5050

Kramer Engineering Services, pllc
5517 Cascade Dr., Chapel Hill, NC 27514
TEL (919)933-3350
email: donna@kesplic.com
Firm license: P-1099

bennett&pless
formerly LHC STRUCTURAL ENGINEERS
5430 Wade Park Blvd, Suite 400
Raleigh, NC 27607
Tel 919 832 5587
Copyright 2022 • **Bennett & Pless, Inc.**
All Rights Reserved
B & P Job Number 22.08.048

N|V|5
NV5 ENGINEERS AND CONSULTANTS, INC.
3300 REGENCY PARKWAY, STE 100
CARY, NC 27518
P: 919.851.1912 www.NV5.com
NC License # F-1333
formerly CKLH Engineers + Consultants

NORTH CAROLINA PROFESSIONAL SEAL 028237 ENGINEER ROBERT J. STEVENSON
5/18/23

PREPARED FOR
NORTH CAROLINA
STATE UNIVERSITY
COLLEGE OF VETERINARY
MEDICINE

NOTE: CFS TRUSS SUPPLIER TO PROVIDE TEMPORARY BRACING OF WEB & CHORDS AS REQ'D (QTY, SIZE & SPACING)

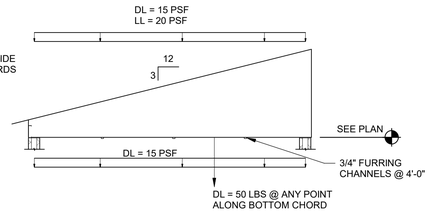

CFS TRUSS NOTES

1. COMPLETE DESIGN CALCULATIONS, SEALED BY A NORTH CAROLINA PROFESSIONAL ENGINEER, ERECTION PLAN AND BRACING PLAN SHALL BE PROVIDED TO THE CONTRACTOR BY THE TRUSS SUPPLIER. SUBMIT TO THE ARCHITECT FOR REVIEW.

2. ALL TRUSSES SHALL BE DESIGNED FOR THE WIND LOADINGS AS PRESCRIBED IN THE NORTH CAROLINA STATE BUILDING CODE IN ADDITION TO THE FOLLOWING LOADS:

TOP CHORD	DL= 15 PSF
	LL= 20 PSF
BOTTOM CHORD	DL= 15 PSF
	DL= 50 LBS @ ANYPOINT ALONG BOTTOM CHORD

DEAD LOADS ARE SUPERIMPOSED LOADS. DESIGN SHALL INCLUDE SELF-WEIGHT OF TRUSSES.

3. ALL PROVISIONS OF THE NORTH CAROLINA STATE BUILDING CODE, AISI " SPECIFICATION FOR THE DESIGN OF COLD-FORMED STEEL STRUCTURAL MEMEBERS", CCFSS TECHNICAL BULLETIN: "AISIA SPECIFICATION FOR SCREW CONNECTIONS", AISI "DESIGN GUIDE FOR COLD-FORMED STEEL TRUSSES", AND AWS D1.3, "STRUCTURAL WELDING CODE, SHEET STEEL" SHALL BE ADHERED TO.

4. BRACE TRUSSES DURING CONSTRUCTION FOR ALL LIVE AND WIND LOADS, INCLUDING WEIGHT OF MATERIAL STAGED ON TRUSSES DURING CONSTRUCTION.

5. INSTALL PERMANENT BRIDGING, BRACING, AND ANCHORAGES TO THE PRIMARY STRUCTURE AS INDICATED ON APPROVED SHOP DRAWINGS. INSTALL BENT PLATES AS INDICATED AT RIDGES, HIPS, VALLEYS, EAVES, AND OTHER TRANSITIONS TO PROVIDE ADEQUATE SUPPORT FOR DECKING AND SHEATHING.

6. TRUSS PROFILES SHOWN ARE REPRESENTATIVE AND DO NOT INCLUDE ALL DIFFERENT INDIVIDUAL CONDITIONS. COORDINATE PROFILES WITH ROOF PLAN AND ARCHITECTURAL DRAWINGS.

4 S002 CFS TRUSS NOTES
1/4" = 1'-0"

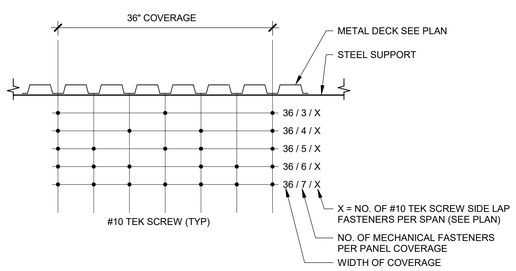

1. WELD/MECHANICAL FASTENER PATTERNS - FOR LOCATION SEE ROOF DECK ATTACHMENT LAYOUT

3 S002 ROOF FASTENER WELD PATTERN
1" = 1'-0"

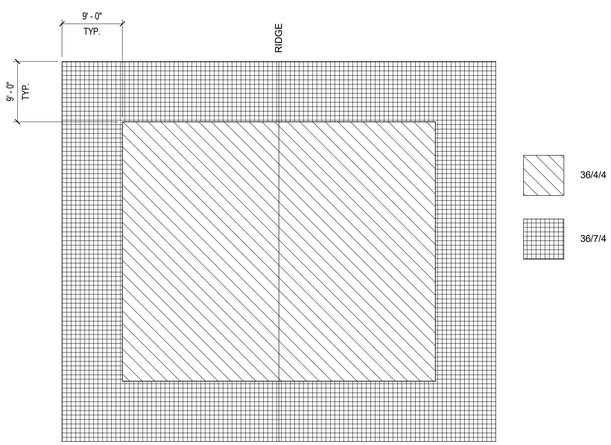

2 S002 ROOF DECK ATTACHMENT LAYOUT
3/32" = 1'-0"

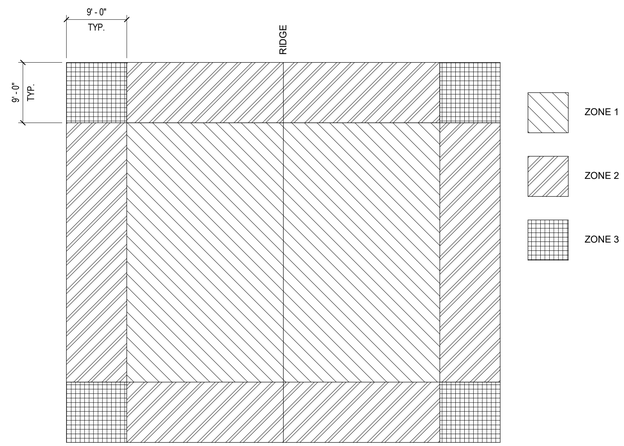

NOTE: SEE SHEET S001 FOR C & C WIND LOADS FOR EACH ZONE

1 S002 ROOF WIND PRESSURE ZONE
3/32" = 1'-0"

TRUE NORTH
PLAN NORTH

TRANSLATIONAL
RESEARCH FACILITY

revisions

building number
cadd file number
drawn by Author
checked by Checker
date Issued for Construction - 05/18/23
project number
NCSU CODE: 42124
ITEM: 305
WA 202207
SCO#: 21-24030-01

ROOF LOADING
ATTACHMENT DIAGRAMS

S002

sheet number: revision number:

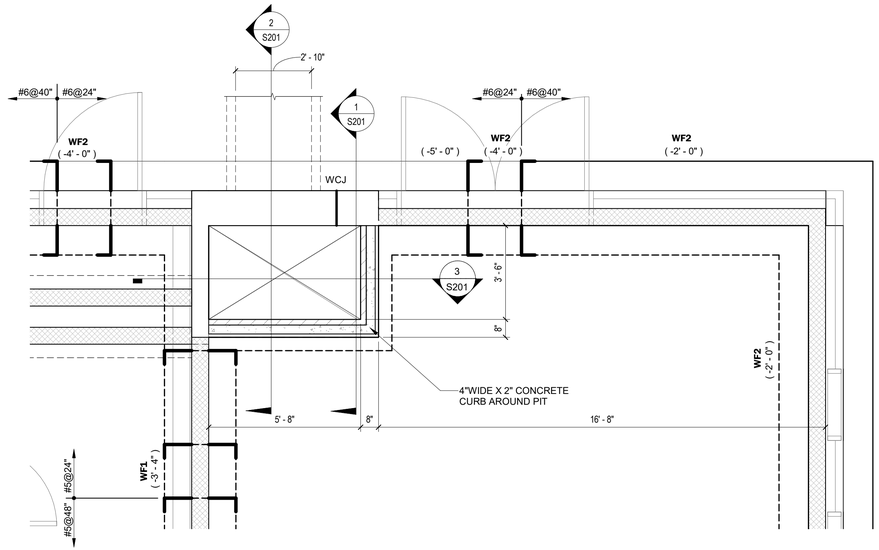

2 S100 PIT FOUNDATION PLAN
3/8" = 1'-0"

WALL FOOTING SCHEDULE			
TYPE	WIDTH	THICKNESS	COMMENTS
WF1	2' - 8"	1' - 0"	
WF2	3' - 6"	1' - 0"	

FOUNDATION PLAN LEGEND

INDICATES SLAB ELEVATION RELATIVE TO FINISH FLOOR ELEVATION.

1 INDICATES NOTE REFERRAL. SEE CORRESPONDING SLAB PLAN NOTE.

FTG ###'-##" / STEP ###'-##" INDICATES STEP IN FOOTING.

SLAB PLAN NOTES:
1. 4" CONC. SLAB W/ 6x6 W2.1X2.1 WWF ON VAPOR RETARDER OVER 4" GRANULAR FILL AND COMPACTED EARTH. FIN. FLOOR ELEVATION = 0'-0".
2. 6" CONC. SLAB W/ #5@18" O.C. E.W. ON VAPOR RETARDER OVER 4" GRANULAR FILL AND COMPACTED EARTH. FIN. FLOOR ELEVATION = 0'-0".
3. C/J DENOTES SLAB CONTROL/CONSTRUCTION JOINT. SEE DETAIL 8/S200.
4. SEE DETAIL 7/S-200 FOR SLAB REINFORCING AT RE-ENTRANT CORNERS.
5. REFER TO ARCHITECTURAL/PLUMBING FLOOR PLAN FOR LOCATION OF FLOOR DRAINS. LOCALLY SLOPE SLAB TO FLOOR DRAINS AT THOSE LOCATIONS.

FOUNDATION PLAN NOTES:
1. NUMBER IN PARENTHESIS (-X'-X") DENOTES TOP OF FOOTING BELOW FIN. FLOOR ELEVATION= 453.50 (0'-0").
2. **WF1** DENOTES WALL FOOTING. SEE S100 FOR SCHEDULE.
3. SEE 4/S300 FOR CMU WALL REINFORCING REQUIREMENTS.
4. PROVIDE #6@40" VERT REINFORCEMENT IN EXTERIOR CMU WALLS U.N.O.
5. PROVIDE #5@48" VERT REINFORCEMENT IN INTERIOR CMU WALLS U.N.O.
6. DENOTES STEPPED FOOTING. SEE DETAIL 5/S200. G.C. COORDINATE STEP LOCATION AND DEPTH W/ PLUMBING CONTRACTOR PRIOR TO FOOTING EXCAVATION.
7. IN ADDITION TO REINFORCING SHOWN ON THE DRAWINGS, PROVIDE #6 VERT BAR IN JAMBS OF ALL DOORS AND WINDOWS. PROVIDE #6 VERT BAR EA. SIDE OF EXPANSION JOINTS AND CONTROL JOINTS. SEE DETAIL 2/S300 AND 3/S300.
8. **WCJ** DENOTES WALL CONTROL JOINT LOCATIONS IN EXTERIOR/LOAD BEARING CMU. SEE S100 FOR PLAN LOCATIONS. SEE ARCH'L FOR JOINT LOCATIONS IN EXTERIOR BRICK AND INTERIOR NON-LOAD BEARING CMU.
9. REFER TO ARCH'L DRAWINGS FOR INTERIOR WALL DIMENSION NOT SHOWN ON STRUCTURAL.
10. PROVIDE BOND BEAMS IN MASONRY WALLS @ 9'-4" MAX AND TOP COURSE OF ALL WALLS.
11. PROVIDE CORNER BARS IN BOND BEAMS AT WALL CORNERS AND INTERSECTIONS. LAP 2'-0". SEE DETAIL 5/S300 AND 6/S300.
12. PROVIDE THICKEND SLAB AT STAIR BASE. SEE DETAIL 12/S200. SEE ARCH FOR STAIR LOCATION

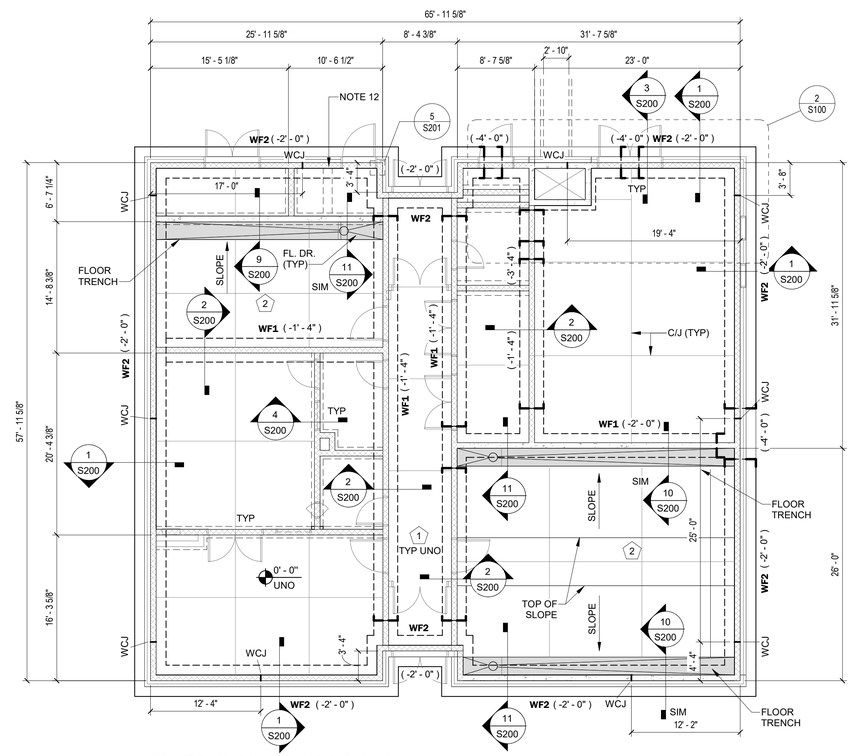

1 S100 FOUNDATION/SOG PLAN
1/8" = 1'-0"

Wagner Architecture, pllc
92 ELAM COURT
NEW HILL, NORTH CAROLINA 27562
TEL. (919) 612.5050

Kramer Engineering Services, pllc
5517 Cascade Dr., Chapel Hill, NC 27514
TEL (919)933-3350
email: donna@kesplic.com
Firm license: P-1099

bennett&pless
formerly LHC STRUCTURAL ENGINEERS
5430 Wade Park Blvd, Suite 400
Raleigh, NC 27607
Tel 919 832 5587

Copyright 2022 • **Bennett & Pless, Inc.**
All Rights Reserved

B & P Job Number 22.08.048

N|V|5
NV5 ENGINEERS AND CONSULTANTS, INC.
3300 REGENCY PARKWAY, STE 100
CARY, NC 27518
P: 919.851.1912 www.NV5.com
NC License # F-1333
formerly CKLH Engineers + Consultants

NORTH CAROLINA PROFESSIONAL SEAL 028237 ENGINEER ROBERT J. STEVENSON
5/18/23

PREPARED FOR
NORTH CAROLINA
STATE UNIVERSITY
COLLEGE OF VETERINARY
MEDICINE

TRUE NORTH
PLAN NORTH

TRANSLATIONAL RESEARCH FACILITY

revisions

building number

cadd file number

drawn by BM

checked by RS

date Issued for Construction - 05/18/23

project number
NCSU CODE: 42124
ITEM: 305
WA 202207
SCO#: 21-24030-01

FOUNDATION PLAN

S100

sheet number: revision number:

Wagner Architecture, pllc
92 ELAM COURT
NEW HILL, NORTH CAROLINA 27562
TEL. (919) 612.5050

Kramer Engineering Services, pllc
5517 Cascade Dr., Chapel Hill, NC 27514
TEL (919)933-3350
email: donna@kesplic.com
Firm license: P-1099

bennett&pless
formerly LHC STRUCTURAL ENGINEERS
5430 Wade Park Blvd, Suite 400
Raleigh, NC 27607
Tel 919 832 5587
Copyright 2022 • **Bennett & Pless, Inc.**
All Rights Reserved
B & P Job Number 22.08.048

N|V|5
NV5 ENGINEERS AND CONSULTANTS, INC.
3300 REGENCY PARKWAY, STE 100
CARY, NC 27518
P: 919.851.1912 www.NV5.com
NC License # F-1333
formerly CKLH Engineers + Consultants

NORTH CAROLINA PROFESSIONAL SEAL 028237 ENGINEER ROBERT J. STEVENSON
5/18/23

PREPARED FOR
NORTH CAROLINA
STATE UNIVERSITY
COLLEGE OF VETERINARY
MEDICINE

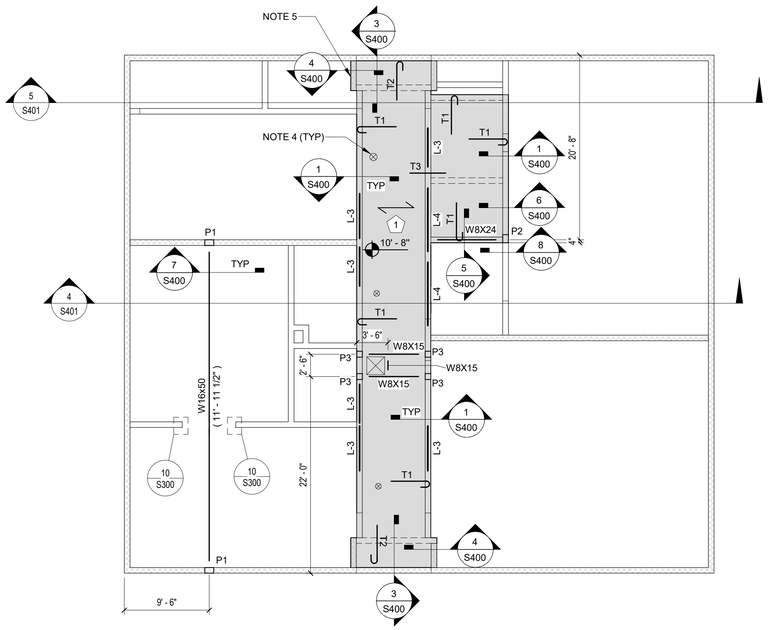

1 S101 MECHANICAL PLATFORM FRAMING PLAN
1/8" = 1'-0"

BEARING PLATE SCHEDULE				
MARK	THICKNESS	LENGTH	WIDTH	REMARKS
P1	1/2"	0' - 7"	1' - 0"	
P2	1/2"	0' - 7"	0' - 11"	OFFSET FROM BEAM CL
P3	1/2"	0' - 7"	0' - 8"	

SLAB TOP BAR SCHEDULE				
MARK	SIZE	SPACING	LENGTH	REMARKS
T1	#4	12"	3' - 0"	180° HOOK ONE END
T2	#4	12"	6' - 0"	180° HOOK ONE END
T3	#4	12"	4' - 0"	

MECH FRAMINGIG PLAN LEGEND

INDICATES SLAB ELEVATION RELATIVE TO FINISH FLOOR ELEVATION.
INDICATES NOTE REFERRAL. SEE CORRESPONDING PLAN NOTE.
INDICATES SLAB DIRECTION

NOTES:
1. 5" LW CONC. SLAB W/ 6x6 W2.1x2.1 WWF ON 3" 18 GA COMPOSITE METAL. TOTAL SLAB THICKNESS = 8". FIN SLAB LEVEL = 10' - 8".
2. TOP OF STEEL (TOS) = 10'-0" UNO.
3. **T1** DENOTES SLAB TOP BARS. SEE S101 FOR SCHEDULE.
4. MECHANICAL PENETRATION THROUGH SLAB. COORDINATE LOCATION WITH MECHANICAL DRAWINGS. REINFORCE SLAB PER DETAIL 7/S400. PROVIDE 2"x2" CURB AROUND ALL PENETRATIONS
5. LEAVE 24" OPENING IN CMU WALL FOR LADDER ACCESS. SEE DETAIL 6/S400. SEE ARCH FOR LOCATION AND EXTENT.
6. **L-1** DENOTES LOAD BEARING/EXTERIOR LINTEL. SEE SCHEDULE ON S300.

TRUE NORTH
PLAN NORTH

TRANSLATIONAL
RESEARCH FACILITY

revisions

building number

cadd file number

drawn by BM

checked by RS

date Issued for Construction - 05/18/23

project number
NCSU CODE: 42124
ITEM: 305
WA 202207
SCO#: 21-24030-01

MECHANICAL PLATFORM
FRAMING PLAN

S101

sheet number: revision number:

Wagner Architecture, pllc
92 ELAM COURT
NEW HILL, NORTH CAROLINA 27562
TEL. (919) 612.5050

Kramer Engineering Services, pllc
5517 Cascade Dr., Chapel Hill, NC 27514
TEL (919)933-3350
email: donna@kesplic.com
Firm license: P-1099

bennett&pless
formerly LHC STRUCTURAL ENGINEERS
5430 Wade Park Blvd, Suite 400
Raleigh, NC 27607
Tel 919 832 5587
Copyright 2022 • **Bennett & Pless, Inc.**
All Rights Reserved
B & P Job Number 22.08.048

N|V|5
NV5 ENGINEERS AND CONSULTANTS, INC.
3300 REGENCY PARKWAY, STE 100
CARY, NC 27518
P: 919.851.1912 www.NV5.com
NC License #F-1333
formerly CKLH Engineers + Consultants

NORTH CAROLINA PROFESSIONAL SEAL 028237 ENGINEER ROBERT J. STEVENSON
5/18/23

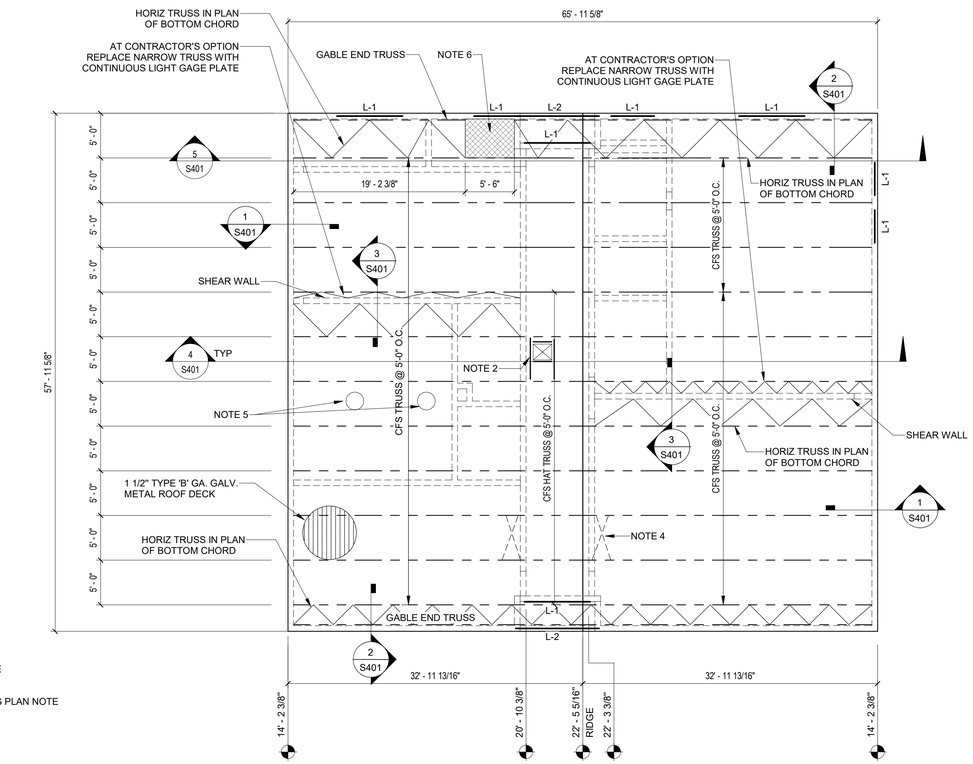

1 S102 ROOF FRAMING PLAN
1/8" = 1'-0"

ROOF FRAMING PLAN LEGEND

INDICATES DECK BEARING ELEVATION (DBE) ABOVE THE FINISH FLOOR ELEVATION = 0'-0".

INDICATES NOTE REFERRAL. SEE CORRESPONDING PLAN NOTE

ROOF FRAMING PLAN NOTES:
1. **L-1** DENOTES LOAD BEARING/EXTERIOR LINTEL. SEE SCHEDULE ON S300.
2. FRAME ROOF OPENINGS W/ L4x4x1/4. COORD. LOCATION W/ MECH'L CONTRACTOR SEE DETAIL 6/S401.
3. USE WIND LOAD TABLE ON S001, WIND ZONES ON S002, AND A ROOF DL = 8 PSF TO DETERMINE NET UPLIFT. PROVIDE ADD'L BRIDGING AS REQ'D.
4. PROVIDE X-STRAP BRACING BETWEEN TRUSSES TO TRANSFER 10 KIPS (ASD) OF LATERAL LOAD TO CMU CURB. TRUSS SUPPLIER TO SUBMIT X-STRAP LOCATION FOR APPROVAL
5. OVERHEAD LIGHTING SHALL BE HUNG FROM STRUCTURE BY UNISTRUT OR APPROVED EQUAL. SEE ARCH DWGS FOR LIGHTING LOCATIONS.
6. HORIZONTAL TRUSS SHOULD NOT BE INSTALLED IN THIS AREA ABOVE STAIR

PREPARED FOR
NORTH CAROLINA STATE UNIVERSITY
COLLEGE OF VETERINARY MEDICINE

TRUE NORTH
PLAN NORTH

TRANSLATIONAL RESEARCH FACILITY

revisions

building number

cadd file number

drawn by BM

checked by RS

date Issued for Construction - 05/18/23

project number
NCSU CODE: 42124
ITEM: 305
WA 202207
SCO#: 21-24030-01

ROOF FRAMING PLAN

S102

sheet number: revision number:

Wagner Architecture, pllc
92 ELAM COURT
NEW HILL, NORTH CAROLINA 27562
TEL. (919) 612.5050

Kramer Engineering Services, pllc
5517 Cascade Dr., Chapel Hill, NC 27514
TEL (919)933-3350
email: donna@kesplic.com
Firm license: P-1099

bennett&pless
formerly LHC STRUCTURAL ENGINEERS
5430 Wade Park Blvd, Suite 400
Raleigh, NC 27607
Tel 919 832 5587
Copyright 2022 • **Bennett & Pless, Inc.**
All Rights Reserved
B & P Job Number 22.08.048

N|V|5
NV5 ENGINEERS AND CONSULTANTS, INC.
3300 REGENCY PARKWAY, STE 100
CARY, NC 27518
P: 919 851 1912 www.NV5.com
NC License #F-1333
formerly CALYX Engineers + Consultants

NORTH CAROLINA PROFESSIONAL SEAL 028237 ENGINEER ROBERT J. STEVENSON
5/18/23

PREPARED FOR
NORTH CAROLINA STATE UNIVERSITY
COLLEGE OF VETERINARY MEDICINE

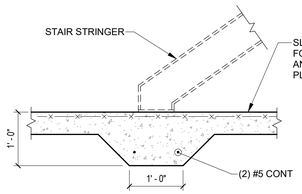

12 S200 TYPICAL THICKENED SLAB AT STAIR BASE
3/4" = 1'-0"

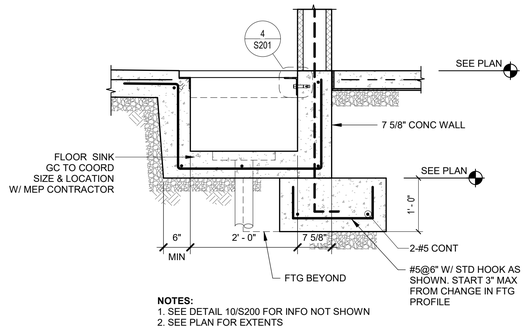

NOTES:
1. SEE DETAIL 10/S200 FOR INFO NOT SHOWN
2. SEE PLAN FOR EXTENTS

11 S200 DETAIL AT TRENCHES @ FLOOR SINK
3/4" = 1'-0"

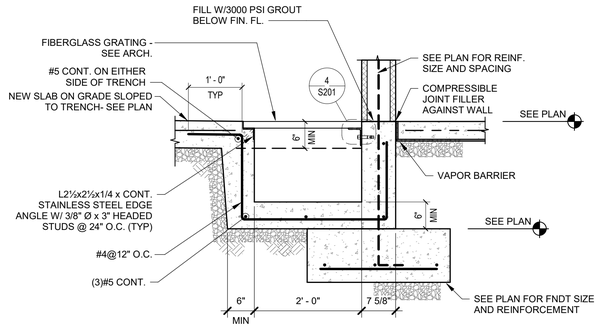

10 S200 DETAIL AT TRENCHES @ WALL FNDT
3/4" = 1'-0"

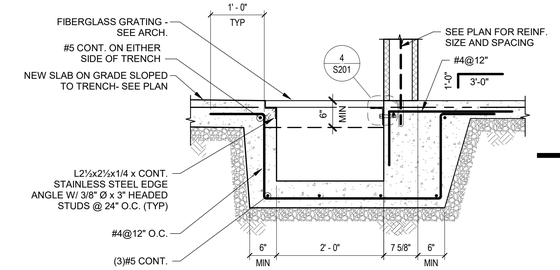

9 S200 DETAIL AT TRENCHES @ THICKENED SLAB
3/4" = 1'-0"

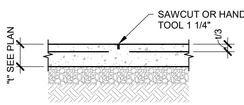

NOTE:
IN LIEU OF SAWCUT OR HAND TOOL CONTRACTOR MAY USE FULL-DEPTH PREFORMED JOINT.

CONTROL JOINT

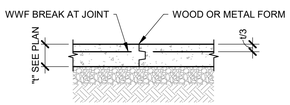

NOTE:
IN LIEU OF FORMING KEY WAY CONTRACTOR MAY USE 1/2"Øx2'-0" LONG SMOOTH DOWELS WITH ONE END GREASED. PLACE AT 24"

CONSTRUCTION JOINT

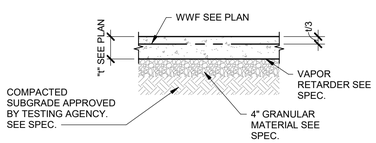

TYPICAL SLAB ON GRADE

8 S200 TYPICAL SLAB ON GRADE DETAILS
3/4" = 1'-0"

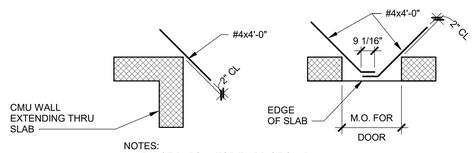

NOTES:
1. PLACE BARS IN TOP THIRD OF SLAB.
2. DETAIL APPLIES WHERE NO C/J OCCURS

7 S200 SLAB PLAN @ RE-ENTRANT CORNER
1/4" = 1'-0"

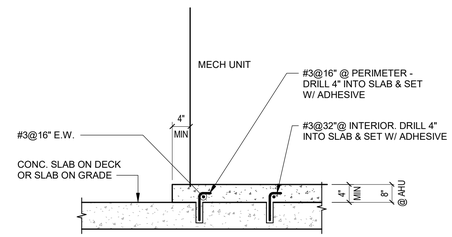

6 S200 TYPICAL EQUIP. PAD DETAIL
3/4" = 1'-0"

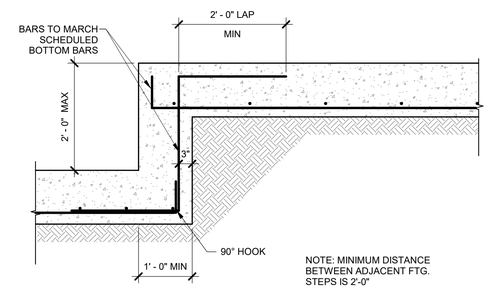

NOTE: MINIMUM DISTANCE BETWEEN ADJACENT FTG. STEPS IS 2'-0"

5 S200 STEPPED FOOTING DETAIL
3/4" = 1'-0"

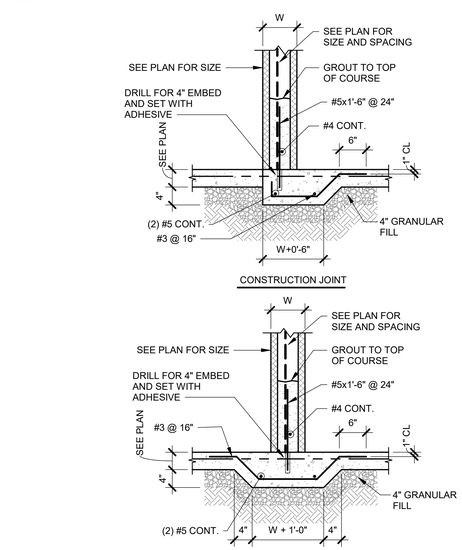

4 S200 THICKENED SLAB
3/4" = 1'-0"

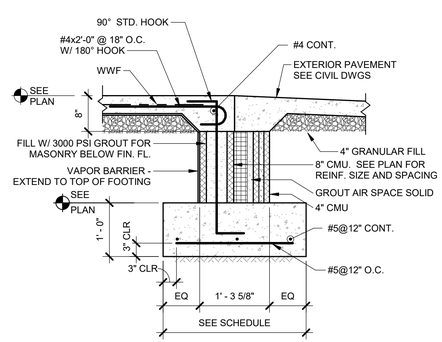

3 S200 TYPICAL EXTERIOR DOOR OPENING
3/4" = 1'-0"

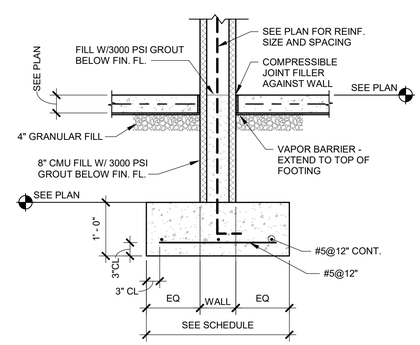

2 S200 INTERIOR WALL FOOTING DETAIL
3/4" = 1'-0"

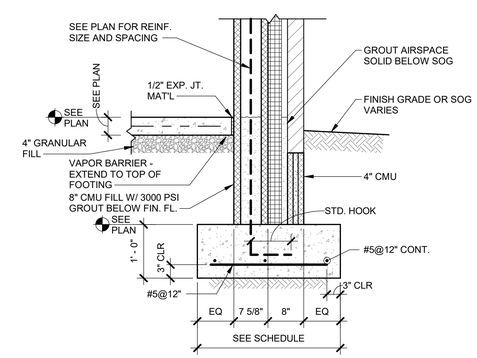

1 S200 TYP. EXTERIOR WALL FOOTING DETAIL
3/4" = 1'-0"

TRUE NORTH
PLAN NORTH

TRANSLATIONAL RESEARCH FACILITY

revisions

building number

cadd file number

drawn by BM

checked by RS

date Issued for Construction - 05/18/23

project number
NCSU CODE: 42124
ITEM: 305
WA 202207
SCO#: 21-24030-01

FOUNDATION DETAILS

S200

sheet number: revision number:

Wagner Architecture, pllc
92 ELAM COURT
NEW HILL, NORTH CAROLINA 27562
TEL. (919) 612.5050

Kramer Engineering Services, pllc
5517 Cascade Dr., Chapel Hill, NC 27514
TEL (919)933-3350
email: donna@kesplic.com
Firm license: P-1099

bennett&pless
formerly LHC STRUCTURAL ENGINEERS
5430 Wade Park Blvd, Suite 400
Raleigh, NC 27607
Tel 919 832 5587
Copyright 2022 • **Bennett & Pless, Inc.**
All Rights Reserved
B & P Job Number 22.08.048

N|V|5
NV5 ENGINEERS AND CONSULTANTS, INC.
3300 REGENCY PARKWAY, STE 100
CARY, NC 27518
P: 919.851.1912 www.NV5.com
NC License #F-1333
formerly OLH Engineers + Consultants

NORTH CAROLINA PROFESSIONAL SEAL 028237 ENGINEER ROBERT J. STEVENSON
5/18/23

PREPARED FOR
NORTH CAROLINA STATE UNIVERSITY
COLLEGE OF VETERINARY MEDICINE

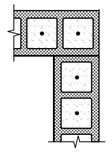

NOTE: FULLY GROUT AND PROVIDE #6 VERT REINFORCEMENT IN THESE CELLS. NO CONDUIT ARE PERMITTED IN THESE REINFORCED CELLS

DETAIL 5 / S201
AT LINTEL OVERLAP
SCALE: 1" = 1'-0"

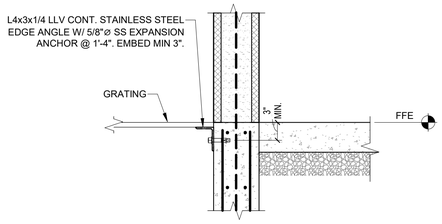

SECTION 4 / S201
AT STEAM TUNNEL PIT
SCALE: 1" = 1'-0"

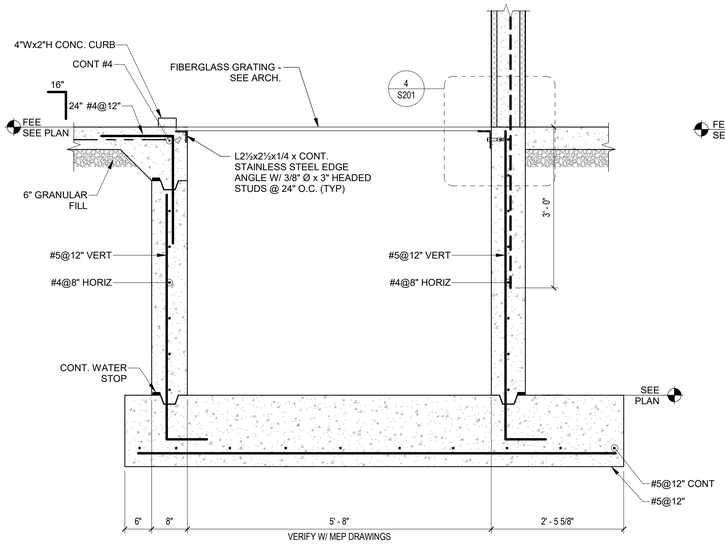

SECTION 3 / S201
INTERIOR WALL AT STEAM TUNNEL PIT
SCALE: 3/4" = 1'-0"

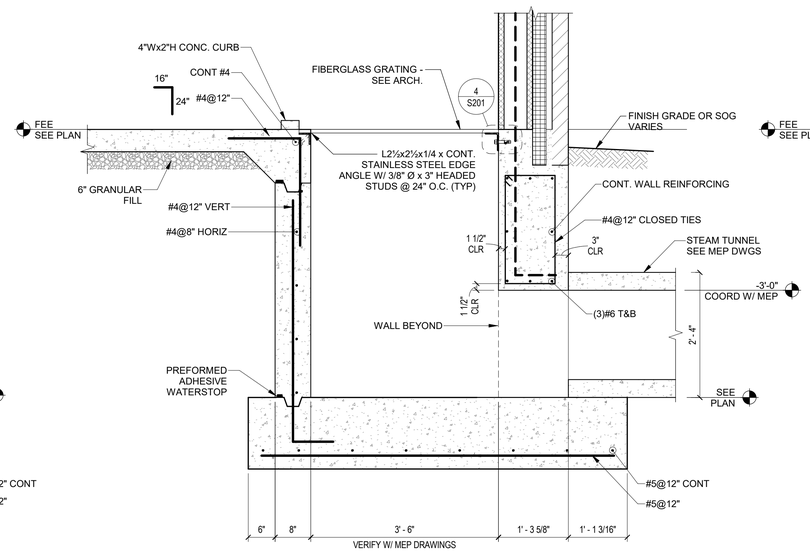

SECTION 2 / S201
EXTERIOR WALL AT STEAM TUNNEL PI
SCALE: 3/4" = 1'-0"

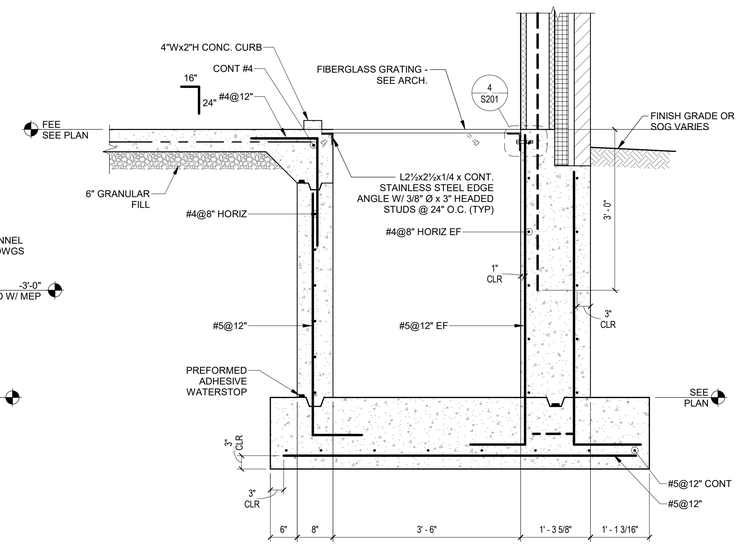

SECTION 1 / S201
EXTERIOR WALL AT STEAM TUNNEL PIT
SCALE: 3/4" = 1'-0"

TRUE NORTH
PLAN NORTH

TRANSLATIONAL RESEARCH FACILITY

revisions

building number

cadd file number

drawn by: Author

checked by: Checker

date: Issued for Construction - 05/18/23

project number
NCSU CODE: 42124
ITEM: 305
WA 202207
SCO#: 21-24030-01

FOUNDATION DETAILS

S201

sheet number: revision number:

NON-LOAD BEARING/INTERIOR LINTEL SCHEDULE

WALL TYPE	OPENING WIDTH	LINTEL TYPE	LINTEL SIZE	REINF.	BEARING EA. END	REMARKS
8" CMU	<4'-0"	U-BLOCK	8x8	(2) #4	8"	
8" CMU	4'-0" THRU 6'-0"	U-BLOCK	8x8	(2) #5	8"	
8" CMU	6'-4" THRU 8'-0"	U-BLOCK	8x16	(2) #5	8"	
8" CMU	8'-4" THRU 12'-0"	U-BLOCK	8x16	(2) #6	8"	

LOAD BEARING / EXTERIOR LINTEL SCHEDULE

MARK	WALL TYPE	LINTEL	SIZE	REINF.	SECTION	BEARING END	REMARKS
L-1	8" CMU 4" BRICK	U-BLOCK STEEL	8x16 PL 3/8x7 1/4" (HORIZ.) PL 3/8x6" (VERT.)	(2)#4	1' - 3 5/8"	8"	HOT DIPPED GALV. SEE 7/S300
L-2	8" CMU 4" BRICK	U-BLOCK STEEL	8x24 PL 3/8x7 1/4" (HORIZ.) PL 3/8x7" (VERT.)	(2)#5	1' - 3 5/8"	8"	HOT DIPPED GALV. SEE 7/S300
L-3	8" CMU	U-BLOCK	8x16	(2)#4	8"	8"	
L-4	8" CMU	U-BLOCK	8x24	(2)#5	8"	8"	
OPNG LESS THAN 30" WIDE	8" CMU	U-BLOCK	8x8	(2)#5	8"	8"	
OPNG 30" TO 42" WIDE	8" CMU	U-BLOCK	8x16	(2)#5	8"	16"	

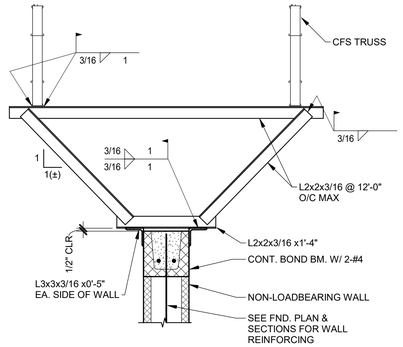

10 S300 WALL BRACING
1" = 1'-0"

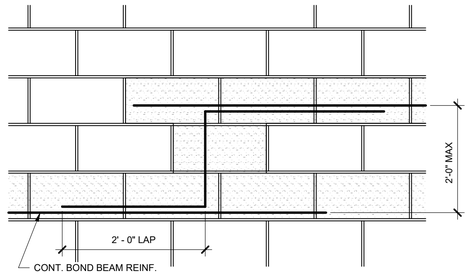

9 S300 TYP. STEP IN BOND BEAM
1" = 1'-0"

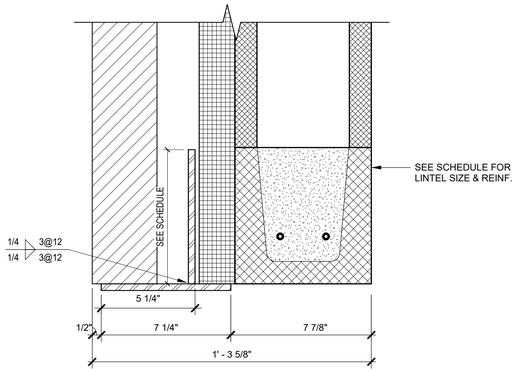

8 S300 LINTEL DETAIL
3" = 1'-0"

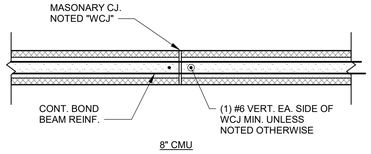

NOTE: SEE ARCH FOR WCJ LOCATIONS AND C/J LOCATIONS IN NON LOAD BEARING WALLS.

7 S300 TYP. CONTROL JOINT DETAIL
3/4" = 1'-0"

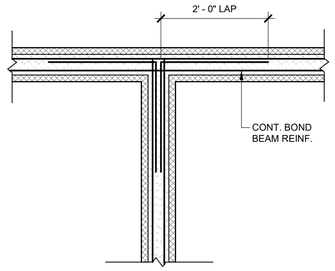

6 S300 TYP. BOND BEAM INTERSECTION
3/4" = 1'-0"

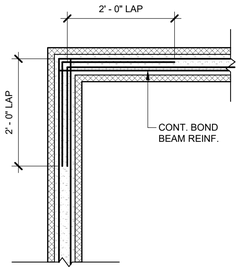

5 S300 TYP. BOND BEAM CORNER
3/4" = 1'-0"

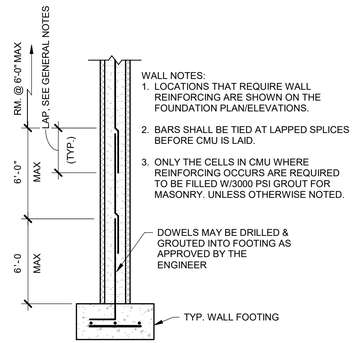

WALL NOTES:
1. LOCATIONS THAT REQUIRE WALL REINFORCING ARE SHOWN ON THE FOUNDATION PLAN/ELEVATIONS.
2. BARS SHALL BE TIED AT LAPPED SPLICES BEFORE CMU IS LAID.
3. ONLY THE CELLS IN CMU WHERE REINFORCING OCCURS ARE REQUIRED TO BE FILLED W/3000 PSI GROUT FOR MASONRY. UNLESS OTHERWISE NOTED.

4 S300 CMU WALL REINF. DETAIL
NTS

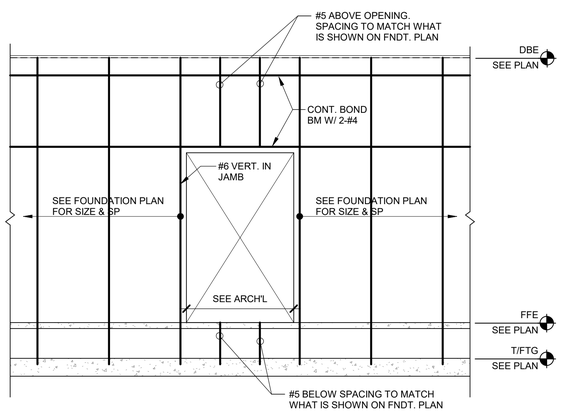

3 S300 TYP. WALL ELEVATION - AT INT. OPENING
1/4" = 1'-0"

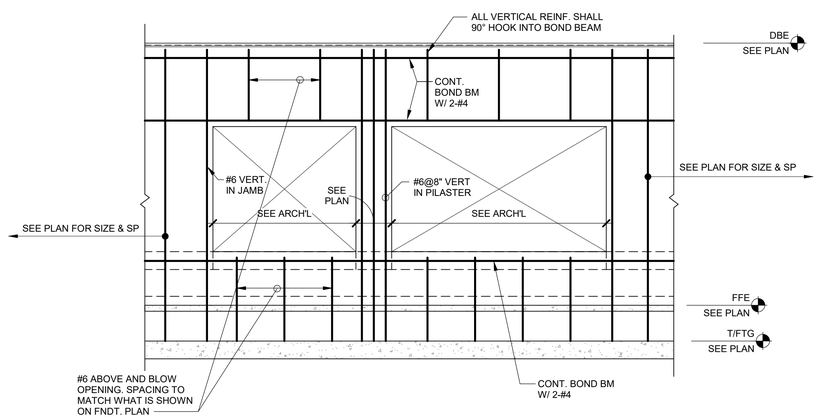

2 S300 TYP. EXTERIOR 8" CMU WALL ELEVATION @ OPENING
1/4" = 1'-0"

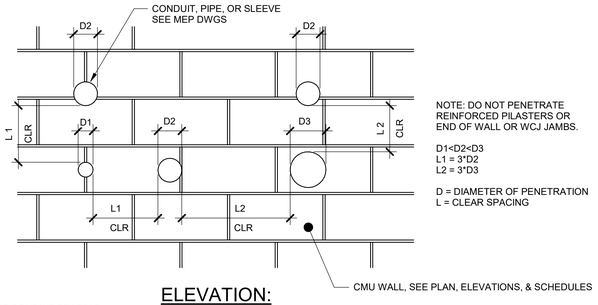

NOTE: DO NOT PENETRATE REINFORCED PILASTERS OR END OF WALL OR WCJ JAMBS.

D1<D2<D3
L1 = 3*D2
L2 = 3*D3

D = DIAMETER OF PENETRATION
L = CLEAR SPACING

ELEVATION:
REQUIRED PENETRATION SPACING

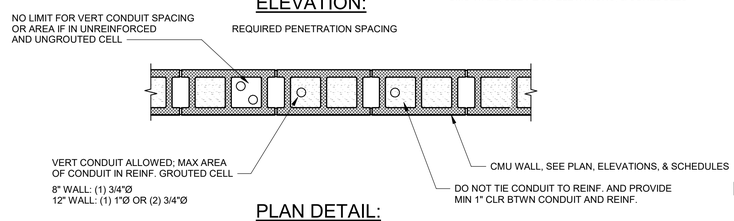

PLAN DETAIL:
EMBEDDED UTILITIES

NOTES:
1. REFER TO MEP DRAWINGS FOR ALL TELECOM, CONDUIT, AND PIPES 8"Ø AND SMALLER. CONTRACTOR TO FOLLOW DETAIL SPACING REQUIREMENTS FOR LAYOUT. IF SPACING CANNOT BE MAINTAINED, PENETRATIONS MUST BE GROUPED BELOW CMU LINTEL. NOTIFY THE EOR FOR LINTEL REQUIREMENTS.
2. CONDUITS SHALL NOT PENETRATE BOND BEAMS NOR LINTELS.
3. PIPES WITH LIQUID, GAS, OR VAPORS HIGHER THAT 150° ARE NOT PERMITTED VERTICALLY WITHIN WALLS.
4. PIPES WITH PRESSURE IN EXCESS OF 55 PSI ARE NOT PERMITTED VERTICALLY WITHIN WALLS.
5. PIPES WITH WATER OR LIQUID SUBJECT TO FREEZING ARE NOT PERMITTED VERTICALLY WITHIN WALLS.

1 S300 CMU WALL UTILITY PENETRATION AND EMBEDMENT TYPICAL DETAIL
1" = 1'-0"

Wagner Architecture, pllc
92 ELAM COURT
NEW HILL, NORTH CAROLINA 27562
TEL. (919) 612.5050

Kramer Engineering Services, pllc
5517 Cascade Dr., Chapel Hill, NC 27514
TEL (919)933-3350
email: donna@kesplic.com
Firm license: P-1099

bennett&pless
formerly LHC STRUCTURAL ENGINEERS
5430 Wade Park Blvd, Suite 400
Raleigh, NC 27607
Tel 919 832 5587

Copyright 2022 • Bennett & Pless, Inc.
All Rights Reserved

B & P Job Number 22.08.048

N|V|5
NV5 ENGINEERS AND CONSULTANTS, INC.
3300 REGENCY PARKWAY, STE 100
CARY, NC 27518
P: 919.851.1912 www.NV5.com
NC License #F-1333
formerly CKLR Engineers + Consultants

NORTH CAROLINA PROFESSIONAL SEAL 028237 ENGINEER ROBERT J. STEVENSON
5/18/23

PREPARED FOR
NORTH CAROLINA STATE UNIVERSITY
COLLEGE OF VETERINARY MEDICINE

TRUE NORTH
PLAN NORTH

TRANSLATIONAL RESEARCH FACILITY

revisions

building number

cadd file number

drawn by BM

checked by RS

date Issued for Construction - 05/18/23

project number
NCSU CODE: 42124
ITEM: 305
WA 202207
SCO#: 21-24030-01

TYP CMU WALL DETAILS

S300

sheet number: revision number:

Wagner Architecture, pllc
92 ELAM COURT
NEW HILL, NORTH CAROLINA 27562
TEL. (919) 612.5050

Kramer Engineering Services, pllc
5517 Cascade Dr., Chapel Hill, NC 27514
TEL (919)933-3350
email: donna@kesplic.com
Firm license: P-1099

bennett&pless
formerly LHC STRUCTURAL ENGINEERS
5430 Wade Park Blvd, Suite 400
Raleigh, NC 27607
Tel 919 832 5587
Copyright 2022 • **Bennett & Pless, Inc.**
All Rights Reserved
B & P Job Number 22.08.048

N|V|5
NV5 ENGINEERS AND CONSULTANTS, INC.
3300 REGENCY PARKWAY, STE 100
CARY, NC 27518
P: 919.851.1912 www.NV5.com
NC License #F-1333
formerly OLH Engineers + Consultants

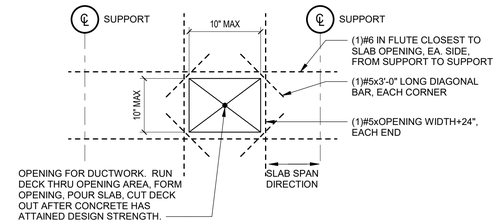

9 / S400 SLAB PENETRATION DETAIL
1/2" = 1'-0"

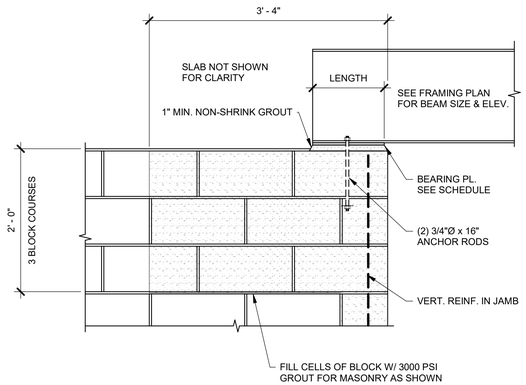

8 / S400 BEAM BEARING DETAIL
1" = 1'-0"

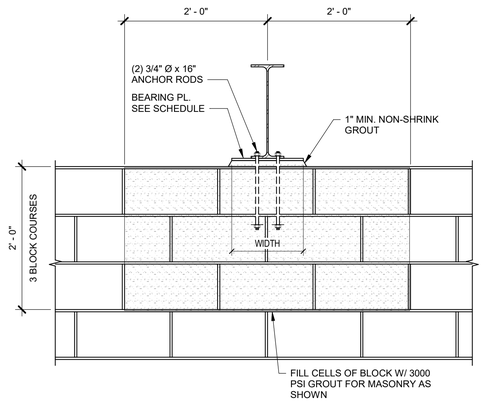

7 / S400 BEAM BEARING DETAIL
1" = 1'-0"

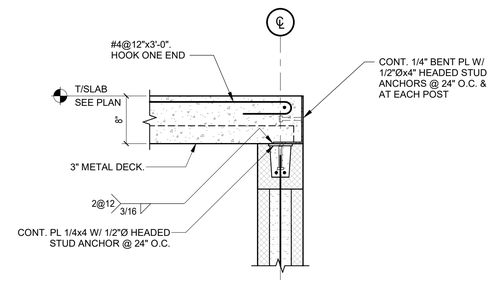

NOTE: SEE ARCH DWGS FOR KNEE WALL OPENING LOCATION AND EXTENT

6 / S400 SECTION AT KNEEWALL OPENING
1" = 1'-0"

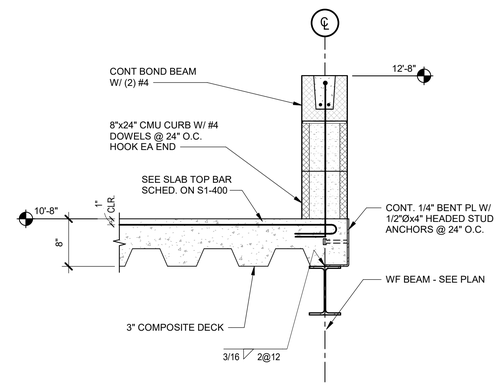

5 / S400 SECTION THRU MECH'L PLATFORM
1" = 1'-0"

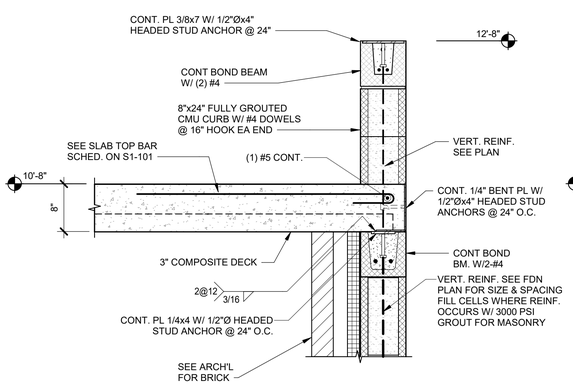

4 / S400 SECT. THRU WALL
1" = 1'-0"

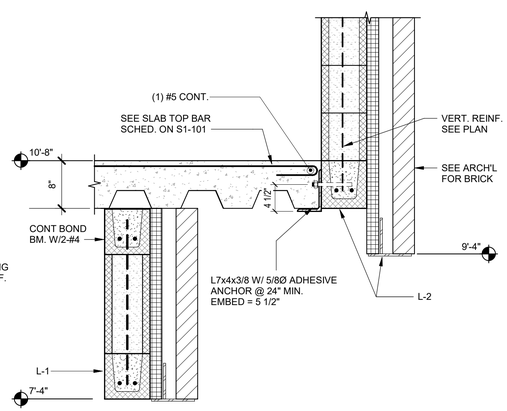

3 / S400 SECT. THRU WALL
1" = 1'-0"

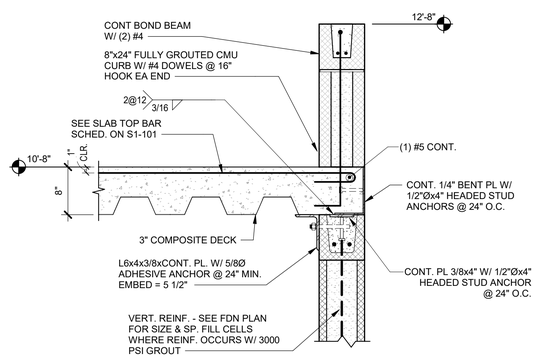

2 / S400 SECT. THRU WALL
1" = 1'-0"

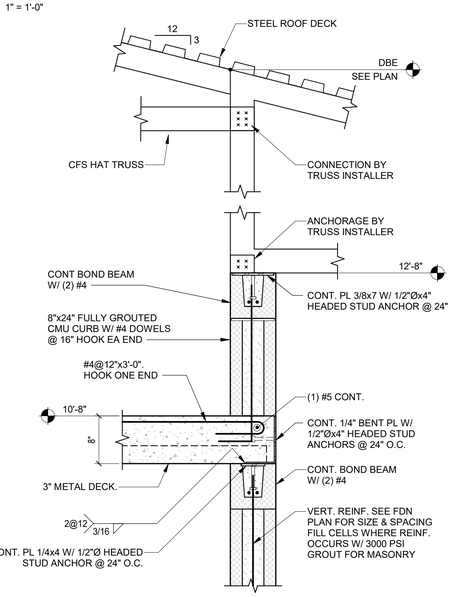

NOTE:
1. PROVIDE X-STRAP BRACING BETWEEN TRUSSES TO TRANSFER 10 KIPS (ASD) OF LATERAL LOAD TO CMU CURB. TRUSS SUPPLIER TO SUBMIT X-STRAP LOCATION FOR APPROVAL.
2. PROVIDE CONTINUOUS BRIDGING SPACED 5'-0" O.C. FOR ROTATIONAL SUPPORT. REDUCTIONS IN ALLOWABLE BENDING CAPACITY MUST BE INVESTIGATED SEPARATELY.

1 / S400 SECTION
1" = 1'-0"

NORTH CAROLINA PROFESSIONAL ENGINEER SEAL 028237 ROBERT J. STEVENSON
5/18/23

PREPARED FOR
NORTH CAROLINA STATE UNIVERSITY
COLLEGE OF VETERINARY MEDICINE

TRUE NORTH
PLAN NORTH

TRANSLATIONAL RESEARCH FACILITY

revisions

building number

cadd file number

drawn by BM

checked by RS

date Issued for Construction - 05/18/23

project number
NCSU CODE: 42124
ITEM: 305
WA 202207
SCO#: 21-24030-01

FRAMING DETAILS

S400

sheet number: revision number:

Wagner Architecture, pllc
92 ELAM COURT
NEW HILL, NORTH CAROLINA 27562
TEL. (919) 612.5050

Kramer Engineering Services, pllc
5517 Cascade Dr., Chapel Hill, NC 27514
TEL (919)933-3350
email: donna@kesplic.com
Firm license: P-1099

bennett&pless
formerly LHC STRUCTURAL ENGINEERS
5430 Wade Park Blvd, Suite 400
Raleigh, NC 27607
Tel 919 832 5587
Copyright 2022 • **Bennett & Pless, Inc.**
All Rights Reserved
B & P Job Number 22.08.048

N|V|5
NV5 ENGINEERS AND CONSULTANTS, INC.
3300 REGENCY PARKWAY, STE 100
CARY, NC 27518
P: 919.851.1912 www.NV5.com
NC License #F-1333
formerly CKLR Engineers + Consultants

NORTH CAROLINA PROFESSIONAL SEAL 028237 ENGINEER ROBERT J. STEVENSON
5/18/23

PREPARED FOR
NORTH CAROLINA
STATE UNIVERSITY
COLLEGE OF VETERINARY
MEDICINE

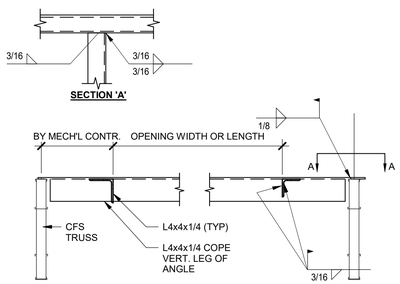

6 S401 ROOF OPENING DETAIL
1" = 1'-0"

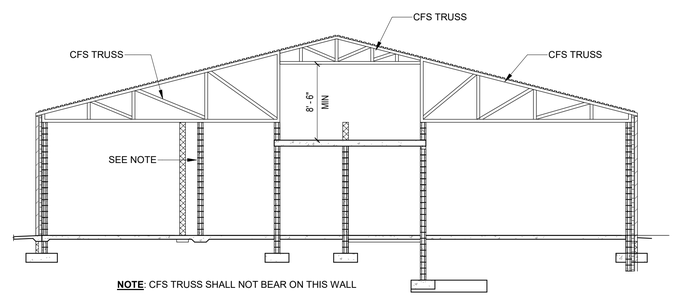

5 S401 BUILDING SECTION @ EXTENDED MEZZANINE
1/8" = 1'-0"

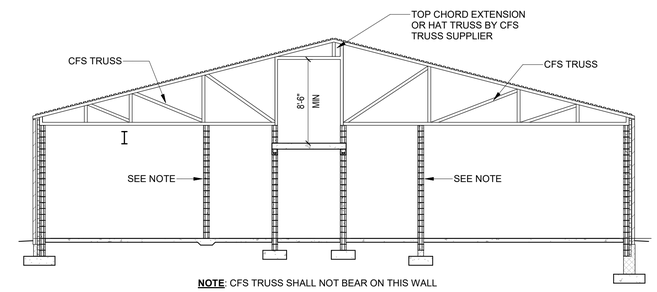

4 S401 TYPICAL BUILDING SECTION
1/8" = 1'-0"

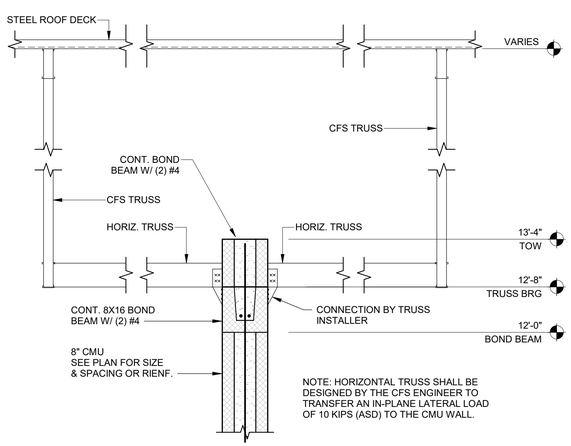

3 S401 SECTION
1" = 1'-0"

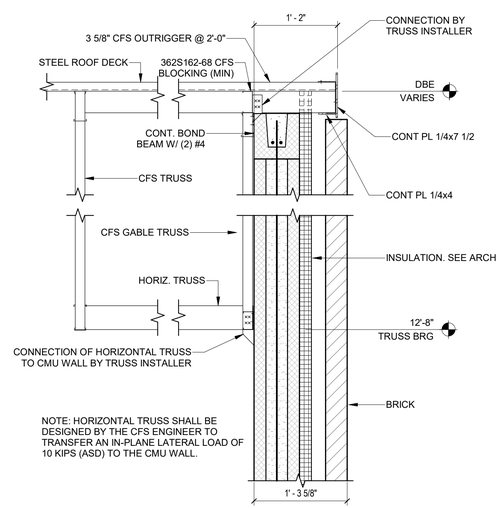

2 S401 SECTION
1" = 1'-0"

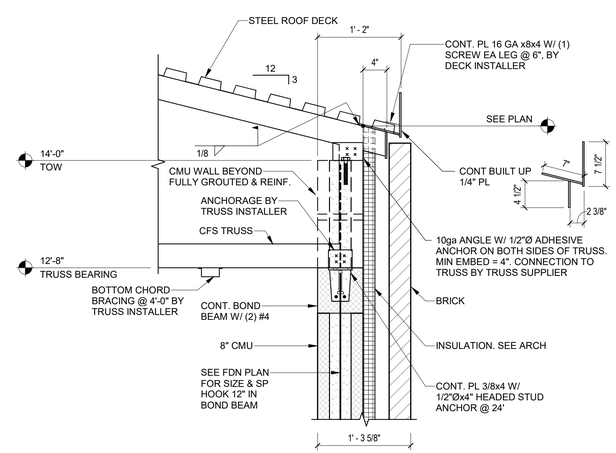

1 S401 SECTION
1" = 1'-0"

TRUE NORTH
PLAN NORTH

TRANSLATIONAL
RESEARCH FACILITY

revisions

building number

cadd file number

drawn by BM

checked by RS

date Issued for Construction - 05/18/23

project number
NCSU CODE: 42124
ITEM: 305
WA 202207
SCO#: 21-24030-01

FRAMING DETAILS

S401

sheet number: revision number:

Vicinity Map

Area Plan

PLAN NOTES:

1. PARKING IS LIMITED. SEE NCSU CONTRACTOR PARKING POLICY.
2. SEE "NORTH CAROLINA STATE UNIVERSITY INFORMAL GENERAL CONDITIONS" FOR FURTHER INFORMATION ON PARKING PERMITS. IF DUMPSTERS ARE TO BE PLACED, PLYWOOD MUST BE UNDERNEATH.
3. SEE C402 FOR LIMITS-OF-CONSTRUCTION (LOC).

Parking / Dumpster / Laydown Area / Security / Access

SYMBOLS

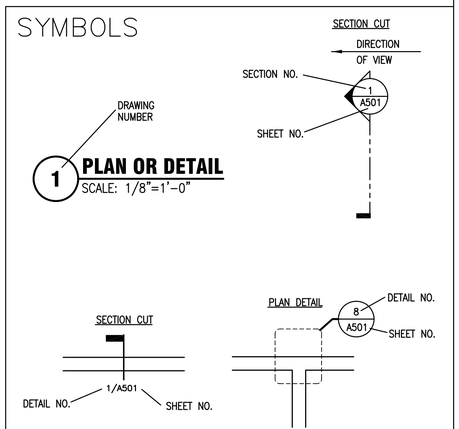

ABBREVIATIONS

@	AT		
L	ANGLE		
&	AND		
AB	ANCHOR BOLT	INT	INTERIOR
AD	AREA DRAIN	LFC	LABORATORY FURNISHINGS CONTRACTOR
ACT	ACOUSTIC TILE	LP	LOW POINT
AFF	ABOVE FINISH FLOOR	LVL	LEVEL
AL/ALUM	ALUMINUM	LVR	LOUVER
APPROX	APPROXIMATE	MAS	MASONRY
ARCH	ARCHITECTURAL	MAX	MAXIMUM
BLDG	BUILDING	MB	MARKER BOARD
BLKG	BLOCKING	MECH	MECHANICAL
BU	BUILT UP	MEZZ	MEZZANINE
CH	CHANNEL	MFR	MANUFACTURER
CB	CATCH BASIN	MH	MANHOLE
CG	CORNER GUARD	MIN	MINIMUM
CGR	CORRIDOR GUARD RAILS	MO	MASONRY OPENING
CI	CAST IRON	MP	MID POINT
CIP	CAST IN PLACE	MS	MACHINE SCREW
CER	CERAMIC	MTL	METAL
CFH	CHEMICAL FUME HOOD	No	NUMBER
CJ	CONTROL JOINT	NOM	NOMINAL
CL	CENTERLINE	NTS	NOT TO SCALE
CLG	CEILING	OC	ON CENTER
CMU	CONCRETE MASONRY UNIT	OD	OUTSIDE DIAMETER
COL	COLUMN	OFCI	OWNER FURNISHED, CONTRACTOR INSTALLED
COMP	COMPOSITE	OFOI	OWNER FURNISHED, OWNER INSTALLED
CONC	CONCRETE	OPNG	OPENING
CONT	CONTINUOUS	OPP	OPPOSITE
CONTR	CONTRACTOR	PCC	PRECAST CONCRETE
CT	CERAMIC TILE	PL	PLATE
CTR	CENTER	PNL	PANEL
DET	DETAIL	P-LAM	PLASTIC LAMINATED
DEMO	DEMOLISH	PLSTR	PLASTER
DIAG	DIAGONAL	PSF	POUNDS PER SQUARE FOOT
ø/DIA	DIAMETER	PSI	POUNDS PER SQUARE INCH
DMPFG	DAMPPROOFING	PT	PARTITION TYPE
DN	DOWN	PTD	PAINTED
DR	DOOR	RC	REINFORCED CONCRETE
DWG	DRAWING	RCP	REFLECTED CEILING PLAN
EJ	EXPANSION JOINT	RD	ROOF DRAIN
EL	ELEVATION	REF	REFERENCE
ELEC	ELECTRICAL	REQD	REQUIRED
ELEV	ELEVATOR	RJ	ROLLER JAMB
EMER	EMERGENCY	RM	ROOM
EPS	EXPANDED POLYSTYRENE	RO	ROUGH OPENING
EQ	EQUAL	SCHD	SCHEDULE
EQUIP	EQUIPMENT	SHT	SHEET
ETR	EXISTING TO REMAIN	SIM	SIMILAR
EXH	EXHAUST	SOG	SLAB ON GRADE
EXP	EXPANSION	SPEC	SPECIFICATION
EXT	EXTERIOR	SS	STAINLESS STEEL
EXIST	EXISTING	STD	STANDARD
EW	EYE WASH	STL	STEEL
FB	FACE BRICK	STRUC	STRUCTURAL/STRUCTURE
FBR	FABRIC	SYS	SYSTEM
FRP	FIBERGLASS REINFORCED PANEL	TB	TACKBOARD
FDN	FOUNDATION	TGL	TEMPERED GLASS
FD	FLOOR DRAIN	TOE	TROWELED-ON EPOXY
FE	FIRE EXTINGUISHER	TOS	TOP OF SLAB/TOP OF STEEL
FEC	FIRE EXTINGUISHER CABINET	TS	TUBE STEEL
FIN	FINISH	TWF	THRU WALL FLASHING
FFE	FURNITURE, FIXTURES & EQUIPMENT	TYP	TYPICAL
FL/FLR	FLOOR	UNO	UNLESS NOTED OTHERWISE
FR	FIRE RATING	VERT	VERTICAL
FVD	FIELD VERIFY DIMENSION	VS	VENT STACK
GA	GAUGE	VTR	VENT THRU ROOF
GC	GENERAL CONTRACTOR	W	WIDTH/WIDE FLANGE STEEL BEAM
GEN	GENERAL	W/	WITH
GAL	GALVANIZED	WAF	WELDED ANGLE FRAME
GL	GLASS	WD	WOOD
GWB	GYPSUM WALL BOARD	WDW	WINDOW
GYP	GYPSUM	WKP	WORK POINT
H	HEIGHT	W/O	WITHOUT
HM	HOLLOW METAL	WP	WEATHERPROOF/WEATHERPROOFING
HP	HIGH POINT	WR	WATER RESISTANT
ID	INSIDE DIAMETER	WSTP	WEATHERSTRIP
IN	INCHES		
INSUL	INSULATION		

PLAN LEGEND:

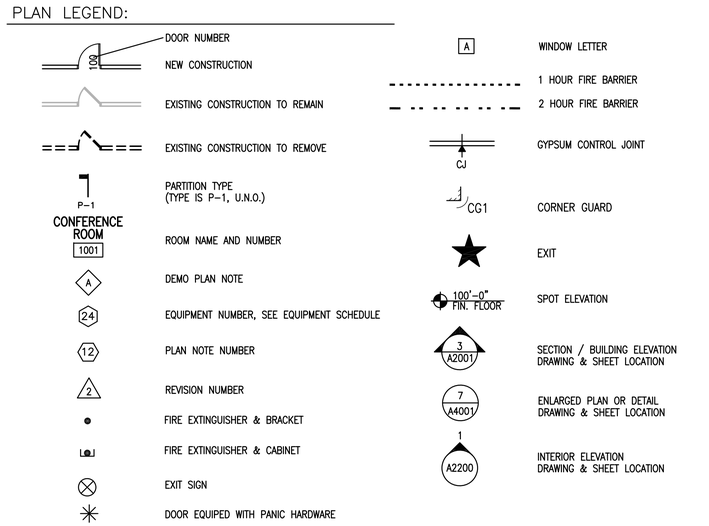

MATERIALS LEGEND:

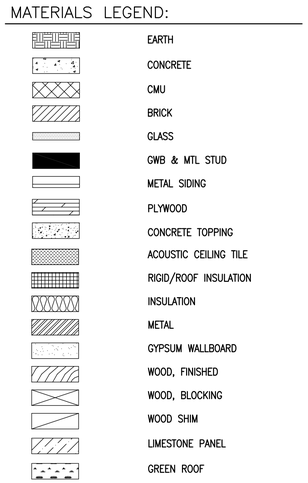

Wagner Architecture, pllc
92 ELAM COURT
NEW HILL, NORTH CAROLINA 27562
TEL. (919) 612.5050

Kramer Engineering Services, pllc
5517 Cascade Dr., Chapel Hill, NC 27514
TEL (919)933-3350
email: donna@kespllc.com
Firm license: P-1099

bennett&pless
formerly LHC STRUCTURAL ENGINEERS
5430 Wade Park Blvd, Suite 400
Raleigh, NC 27607
Tel 919 832 5587

Copyright 2022 • Bennett & Pless, Inc.
All Rights Reserved

B&P Job Number 22.08.048

NV5
NV5 ENGINEERS AND CONSULTANTS, INC.
3300 REGENCY PARKWAY, STE 100
CARY, NC 27518
P: 919.851.1912 www.NV5.com
NC License # F-1333
formerly CALYX Engineers + Consultants

KIMBERLY ANN WAGNER
REGISTERED ARCHITECT
10244
NORTH CAROLINA
CARNER, NC

WAGNER ARCHITECTURE PLLC
51882
North Carolina
CARNER, NC

PREPARED FOR
NORTH CAROLINA STATE UNIVERSITY
COLLEGE OF VETERINARY MEDICINE

TRUE NORTH
PLAN NORTH

TRANSLATIONAL RESEARCH FACILITY

revisions

building number

cadd file number

drawn by RFW

checked by KAW

date ISSUED FOR CONSTRUCTION-05/18/23

project number
NCSU CODE: 42124
ITEM: 305
WA 202207
SCO#: 21-24030-01A

ABBREVIATIONS, LEGENDS, SYMBOLS

sheet number: A000

revision number:

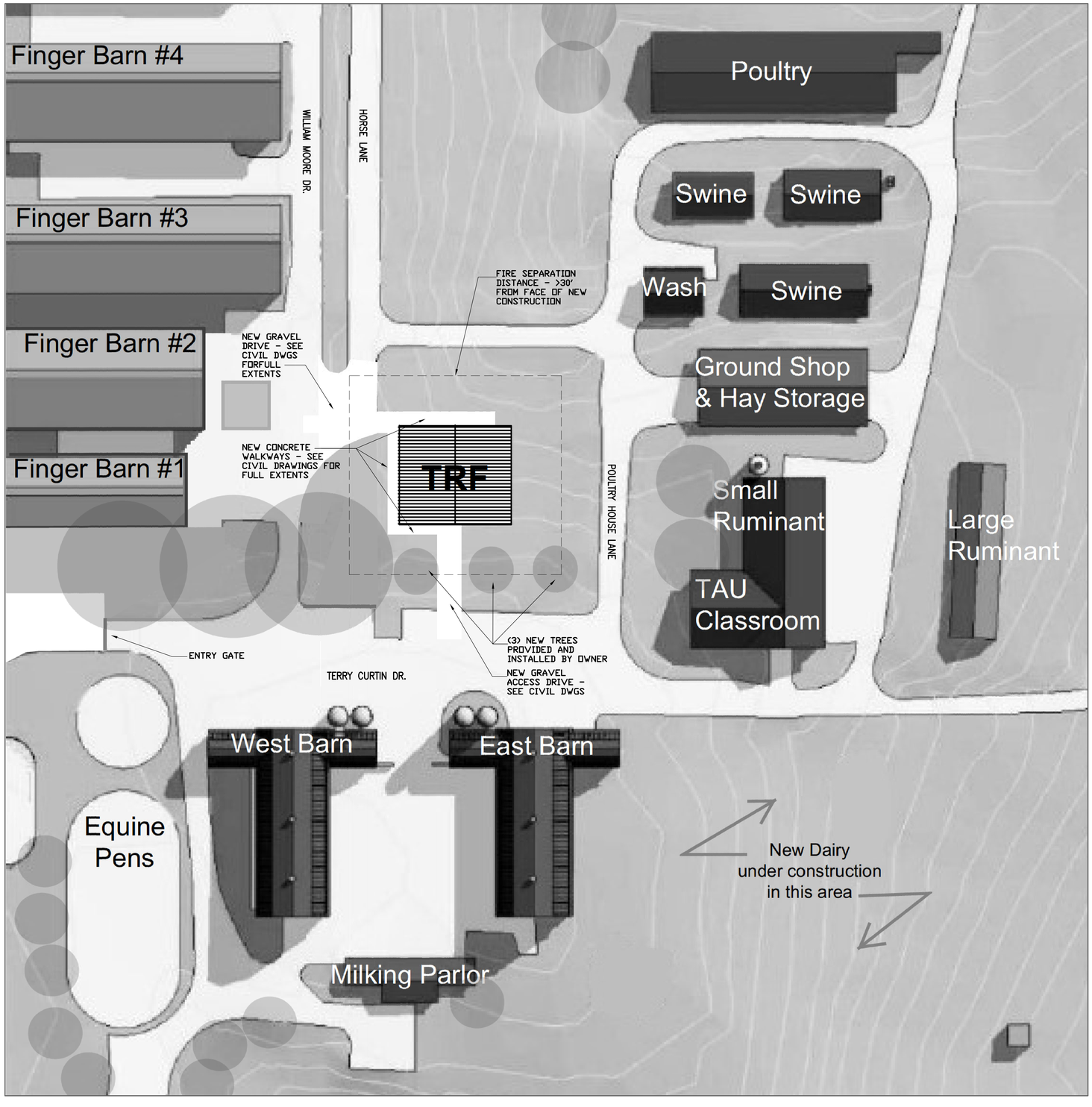

1 **ARCHITECTURAL SITE PLAN**
SCALE: 1/32"=1'-0"

ARCHITECTURAL SITE PLAN NOTES:

1. CONTRACTOR TO RFER TO SITE/CIVIL SHEETS AND PROJECT SPECIFICATIONS FOR LIMITS OF CONSTRUCTION, TREE PROTECTION, CONSTRUCTION FENCING REQUIREMENTS, AND SILT PROTECTION REEQUIRMENTS.
2. CONTRACTOR ON-CAMPUS PARKING AND LAYDOWN AREA SHALL BE WITHING THE PROJECTS LIMITS NOTED ON SHEET A000.

Wagner Architecture, pllc
92 ELAM COURT
NEW HILL, NORTH CAROLINA 27562
TEL. (919) 612.5050

Kramer Engineering Services, pllc
5517 Cascade Dr., Chapel Hill, NC 27514
TEL (919)933-3350
email: donna@kespllc.com
Firm license: P-1099

bennett&pless
formerly LHC STRUCTURAL ENGINEERS
5430 Wade Park Blvd, Suite 400
Raleigh, NC 27607
Tel 919 832 5587

Copyright 2022 ● Bennett & Pless, Inc.
All Rights Reserved

B&P Job Number 22.08.048

NV5
NV5 ENGINEERS AND CONSULTANTS, INC.
3300 REGENCY PARKWAY, STE 100
CARY, NC 27518
P: 919.851.1912 www.NV5.com
NC License # F-1333
formerly CALYX Engineers + Consultants

KIMBERLY ANN WAGNER REGISTERED ARCHITECT 10244 NORTH CAROLINA GARNER, NC

WAGNER ARCHITECTURE PLLC 51882 Registered Architecture North Carolina GARNER, NC

PREPARED FOR
NORTH CAROLINA
STATE UNIVERSITY
COLLEGE OF VETERINARY
MEDICINE

TRUE NORTH
PLAN NORTH

TRANSLATIONAL RESEARCH FACILITY

revisions

building number

cadd file number

drawn by RFW

checked by KAW

date ISSUED FOR CONSTRUCTION-05/18/23

project number
NCSU CODE: 42124
ITEM: 305
WA 202207
SCO#: 21-24030-01A

ARCHITECTURAL SITE PLAN

sheet number A001

revision number

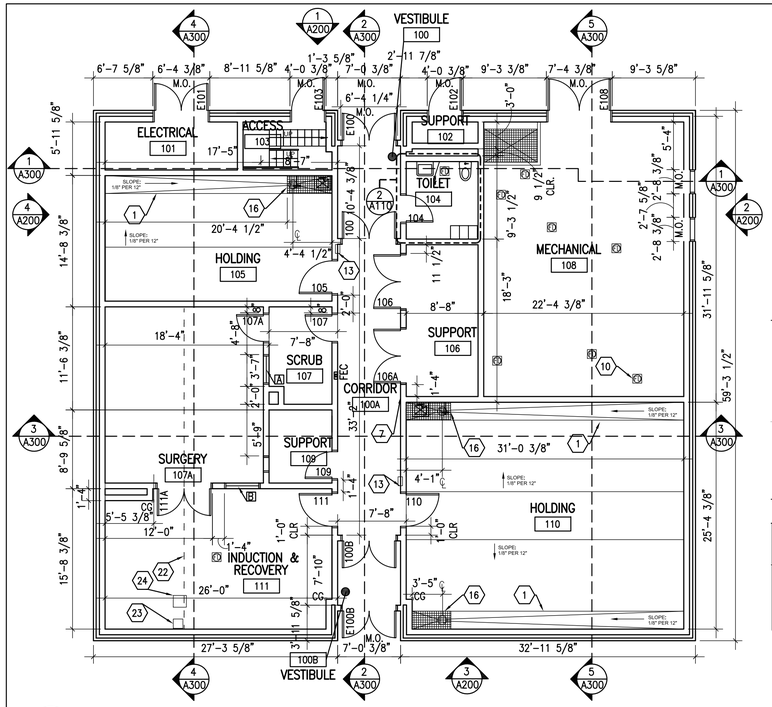

1 FLOOR PLAN
SCALE: 1/8"=1'-0"

SCALE: 1/8"=1'-0" (IN FEET) 0 4' 8' 16'

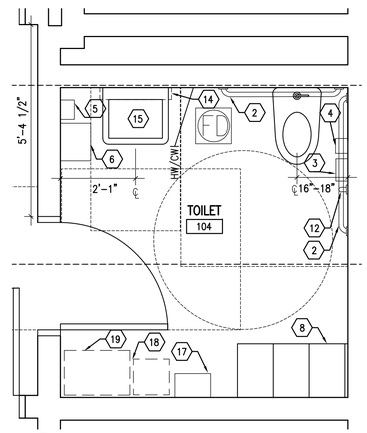

2 ENLARGED TOILET PLAN
SCALE: 1/2"=1'-0"

SCALE: 1/2"=1'-0" (IN FEET) 0 1' 2' 4'

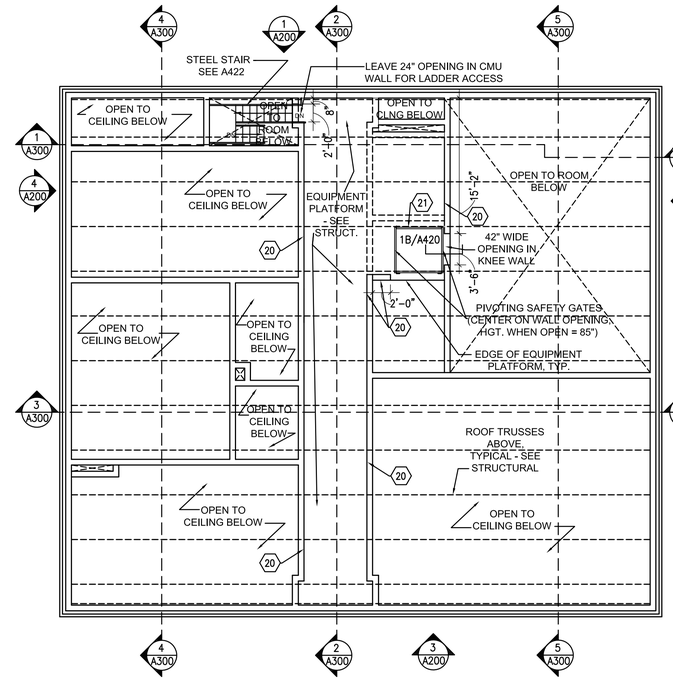

3 EQUIPMENT PLATFORM
SCALE: 1/8"=1'-0"

SCALE: 1/8"=1'-0" (IN FEET) 0 4' 8' 16'

FLOOR PLAN NOTES:

1. SEE SHEET G002 FOR LIFE SAFETY, CONSTRUCTION LIMITS, CODE INFORMATION, ABBREVIATIONS, AND SYMBOLS LEGEND.
2. DO NOT SCALE DRAWINGS. DIMENSIONS GOVERN. CONTRACTOR IS RESPONSIBLE FOR REVIEWING AND COORDINATING ALL DIMENSIONS AND OTHER CONDITIONS APPLICABLE TO THE WORK. SHOULD ANY DISCREPANCIES APPEAR, THE CONTRACTOR SHALL NOTIFY THE ARCHITECT BEFORE PROCEEDING WITH THE WORK. FIELD VERIFY ALL DIMENSIONS WITH EMPHASIS AT EXISTING BUILDING CONDITIONS.
3. ALL INTERIOR DIMENSIONS ARE FROM FACE OF MASONRY, FACE OF DRYWALL OR COLUMN LINE TO FACE OF MASONRY, FACE OF DRYWALL OR COLUMN LINE.
4. SEE A500 FOR PARTITION TYPES AND FRAMING INFORMATION. PARTITIONS ARE TYPE P1 UNLESS OTHERWISE NOTED.
5. SEAL ALL INTERSECTIONS BETWEEN PARTITIONS AND STRUCTURE. AVOID CUTTING BACK TO BACK OPENINGS IN ADJACENT WALLS.
6. RATED PARTITIONS AND WALLS ARE TO BE EFFECTIVELY AND PERMANENTLY MARKED ABOVE CEILING IN ACCORDANCE WITH NORTH CAROLINA BUILDING CODE. ALL PENETRATIONS IN RATED CONSTRUCTION SHALL COMPLY WITH FIRE PROTECTION REQUIREMENTS ON G002 AND RATED PENETRATION ASSEMBLIES ON G100.
7. INTERIOR FINISHES: SEE FINISH SCHEDULE SHEET A130. NOTIFY ARCHITECT OF ANY DISCREPANCIES BEFORE PROCEEDING WITH THE WORK.
8. LABORATORY FURNISHINGS: SEE SHEET A400 FOR FIXTURES, AND CASEWORK, TYP. NOTIFY ARCHITECT OF ANY DISCREPANCIES BEFORE PROCEEDING WITH THE WORK.
9. PROVIDE HORIZONTAL BLOCKING AT CASEWORK/MILLWORK INSTALLATIONS, WHERE REQUIRED.
10. ALL JOINTS ARE TO BE COMPLETELY AND CONTINUOUSLY SEALED WITH AND APPROPRIATE SEALANT. THIS INCLUDES, BUT IS NOT LIMITED TO CEILINGS/WALLS/FLOORS, DOOR FRAMES TO WALL, EQUIPMENT ENCLOSURES TO ADJACENT FINISHES, DIFFUSERS, LIGHTING FIXTURES, AND ACCESS PANELS TO CEILINGS, AND CASEWORK TO WALLS.

KEYNOTES:

1. SLOPE TO DRAIN AT 1/8" PER FOOT, TYP. MINIMUM TRENCH DEPTH 6" SEE STRUCTURAL.
2. HORIZONTAL GRAB BAR. SEE 3/A130 FOR TYPICAL MOUNTING HEIGHT.
3. CFCI SANITARY NAPKIN DISPOSAL. SEE 3/A130 FOR TYPICAL MOUNTING HEIGHT.
4. OFCI ADA TOILET TISSUE DISPENSER. SEE 3/A130 FOR TYPICAL MOUNTING HEIGHT.
5. OFCI SOAP DISPENSER. SEE 3/A130 FOR TYPICAL MOUNTING HEIGHT.
6. OFCI PAPER TOWEL DISPENSER. SEE A130 FOR TYPICAL MOUNTING HEIGHT.
7. RECESSED FEC
8. PAINTED METAL 2 TIER LOCKERS. SEE DETAIL 9/A500 FOR LOCKER BASE DETAIL.
9. 18" W X 18" D X 16" HIGH PASS BOX. MOUNT AT 40" AFF.
10. PROVIDE 12" X 12" AREA OF SLOPED SLAB TO DRAIN AT 1/8" PER FOOT AT ALL FLOOR DRAIN LOCATIONS SHOWN. COORDINATE LOCATIONS WITH ALL CURB LOCATIONS. PROVIDE AT 24" X 24" AT FLOOR SINK IN INDUCTION & RECOVERY 111.
11. NOT USED
12. MOUNT 18" VERTICAL SS GRAB BAR. SEE A130 FOR TYPICAL MOUNTING HEIGHT.
13. SEMI RECESSED LIGHTING CONTROL BOX. SEE ELECTRICAL FOR ADDITIONAL INFORMATION.
14. MIRROR. SEE 3/A130 FOR TYPICAL MOUNTING HEIGHT.
15. SINK HEIGHT 34" AFF MAX.
16. FIBERGLASS GRATE.
17. CFCI SANITARY NAPKIN DISPENSER.
18. OFOI WASTE RECEPTACLE.
19. OFOI COMPOST RECEPTACLE.
20. 1 5/8" SCHEDULE 40 PIPE RAIL AT 42" AFF IN BETWEEN MECHANICAL EQUIPMENT INSTALLATION LOCATIONS. SEE DETAIL 1/A420.
21. PIVOTING DUAL SAFETY GATE. BASIS OF DESIGN IS GARLOCK "LEDGEGUARD" OR EQUAL.
22. HOIST BEAM ABOVE. SEE STRUCTURAL.
23. CORD REEL – POWER CORD FOR HOIST.
24. HOIST

Wagner Architecture, pllc
92 ELAM COURT
NEW HILL, NORTH CAROLINA 27562
TEL. (919) 612.5050

Kramer Engineering Services, pllc
5517 Cascade Dr., Chapel Hill, NC 27514
TEL (919)933-3350
email: donna@kespllc.com
Firm license: P-1099

bennett&pless
formerly LHC STRUCTURAL ENGINEERS
5430 Wade Park Blvd, Suite 400
Raleigh, NC 27607
Tel 919 832 5587

Copyright 2022 • Bennett & Pless, Inc.
All Rights Reserved

B&P Job Number 22.08.048

NV5
NV5 ENGINEERS AND CONSULTANTS, INC.
3300 REGENCY PARKWAY, STE 100
CARY, NC 27518
P: 919.851.1912 www.NV5.com
NC License #F-1333
formerly CALYX Engineers + Consultants

KIMBERLY ANN WAGNER REGISTERED ARCHITECT 10244 NORTH CAROLINA GARNER, NC
WAGNER ARCHITECTURE PLLC Registered Architecture Firm 51882 North Carolina GARNER, NC
5-18-23

PREPARED FOR
NORTH CAROLINA STATE UNIVERSITY
COLLEGE OF VETERINARY MEDICINE

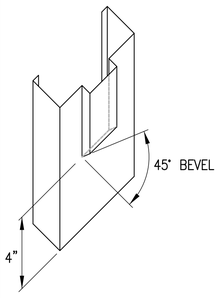

4 HOSPITAL STOP
NOT TO SCALE

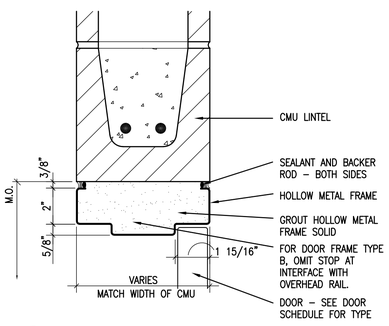

5 HOLLOW METAL DOOR FRAME - HEAD
3" = 1'-0"

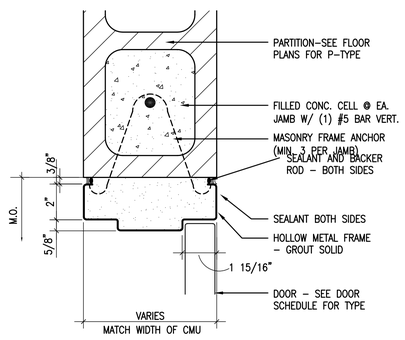

6 HOLLOW METAL DOOR FRAME - JAMB
3" = 1'-0"

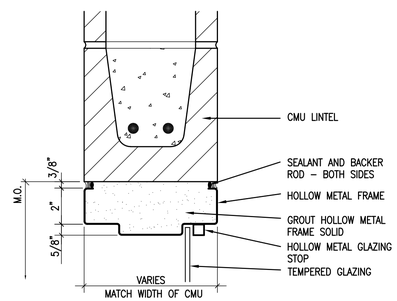

7 HOLLOW METAL WINDOW FRAME - HEAD
3" = 1'-0"

FRAME ELEVATIONS & TYPES

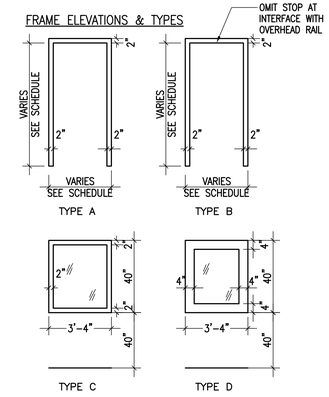

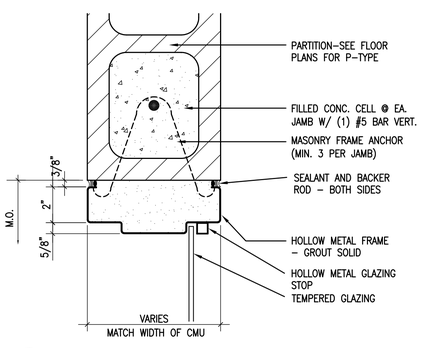

8 HOLLOW METAL WINDOW FRAME - JAMB
3" = 1'-0"

DOOR SCHEDULE

		DOOR					FRAME				DETAILS				
DOOR #	ROOM NAME	TYPE	MATERIAL	SIZE	FINISH	GLASS	ELEV	MATERIAL	FINISH	GLASS	HEAD	JAMB	TRANS	HDW	NOTES/LABEL
E100	VESTIBULE	D	HM	3'-0" X 7'-2" & 3'-0" X 7'-2"	PTD	–	A	HM	PTD	–	2/A421	1/A422	–	7	2
E100B	VESTIBULE	D	HM	3'-0" X 7'-2" & 3'-0" X 7'-2"	PTD	–	A	HM	PTD	–	2/A421	1/A422	–	7	2
E101	ELECTRICAL	D	HM	3'-0" X 7'-2" & 3'-0" X 7'-2"	PTD	–	A	HM	PTD	–	3A/A421	3B/A421	–	8	2
E102	SUPPORT	B	HM	3–8" X 7'-2"	PTD	–	A	HM	PTD	–	3A/A421	3B/A421	–	2	2
E103	ACCESS	B	HM	3'-8" X 7'-2"	PTD	–	A	HM	PTD	–	3A/A421	3B/A421	–	2	2
E108	MECHANICAL	D	HM	3'-6" X 7'-2" & 3'-6" X 7'-2"	PTD	–	A	HM	PTD	–	5/A110	6/A110	–	8	2
100	CORRIDOR	C	HM	3'-0" X 7'-2" & 3'-0" X 7'-2"	PTD	TGL	A	HM	PTD	–	5/A110	6/A110	–	3	1, 2
100B	VESTIBULE	C	HM	3'-0" X 7'-2" & 3'-0" X 7'-2"	PTD	TGL	A	HM	PTD	–	5/A110	6/A110	–	3	1, 2
104	TOILET	B	HM	3'-0" X 7'-2"	PTD	–	A	HM	PTD	–	5/A110	6/A110	–	9	1, 2
105	HOLDING	A	HM	3'-8" X 7'-2"	PTD	TGL	A	HM	PTD	–	5/A110	6/A110	–	1	1, 2
106	SUPPORT	D	HM	3'-0" X 7'-2" & 3'-0" X 7'-2"	PTD	–	A	HM	PTD	–	5/A110	6/A110	–	6	1, 2
106A	SUPPORT	D	HM	3'-0" X 7'-2" & 3'-0" X 7'-2"	PTD	–	A	HM	PTD	–	5/A110	6/A110	–	6	1, 2
107	SCRUB	A	HM	3'-0" X 7'-2"	PTD	TGL	A	HM	PTD	–	5/A110	6/A110	–	10	1, 2
107A	SURGERY	A	HM	3'-0" X 7'-2"	PTD	TGL	A	HM	PTD	–	5/A110	6/A110	–	5	1, 2
109	SUPPORT	A	HM	3'-0" X 7'-2"	PTD	TGL	A	HM	PTD	–	5/A110	6/A110	–	4	1, 2
110	HOLDING	A	HM	3'-8" X 7'-2"	PTD	TGL	A	HM	PTD	–	5/A110	6/A110	–	1	1, 2
111	INDUCTION & RECOVERY	A	HM	3'-8" X 7'-2"	PTD	TGL	A	HM	PTD	–	5/A110	6/A110	–	1	1, 2
111A	INDUCTION & RECOVERY	E	HM	3'-0" X 11'-11.5" & 3'-0" X 11'-11.5"	PTD	TGL	B	HM	PTD	–	5/A110	6/A110	–	11	1, 2

NOTES LEGEND:
1. HOSPITAL STOPS
2. ADD ALTERNATE #2 – GALVANIZE ALL HOLLOW METAL DOORS AND FRAMES.

WINDOW SCHEDULE

		FRAME				DETAILS		
WINDOW	ROOM NAME	ELEV	MATERIAL	FINISH	GLASS	HEAD	JAMB	NOTES/LABEL
A	SCRUB	C	HM	PTD	TGL	8/A110	–	1
B	INDUCTION & RECOVERY	D	HM	PTD	TGL	8/A110	6/A110	1

NOTES LEGEND:
1. GLAZING TO BE INSTALLED SCRUB AND INDUCTION & RECOVERY ROOM SIDES.

DOOR TYPES

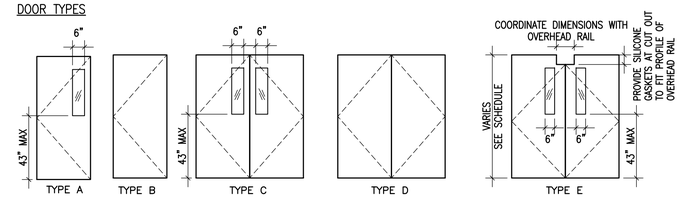

NOTE: 1/4" TEMPERED GLASS LITES.

LINETYPE LEGEND:
NEW PARTITION
EXISTING CONSTRUCTION

TRUE NORTH
PLAN NORTH

TRANSLATIONAL RESEARCH FACILITY

revisions

building number

cadd file number

drawn by RFW

checked by KAW

date ISSUED FOR CONSTRUCTION–05/18/23

project number
NCSU CODE: 42124
ITEM: 305
WA 202207
SCO#: 21–24030–01A

FLOOR PLAN & DOOR SCHEDULE

sheet number A110

revision number

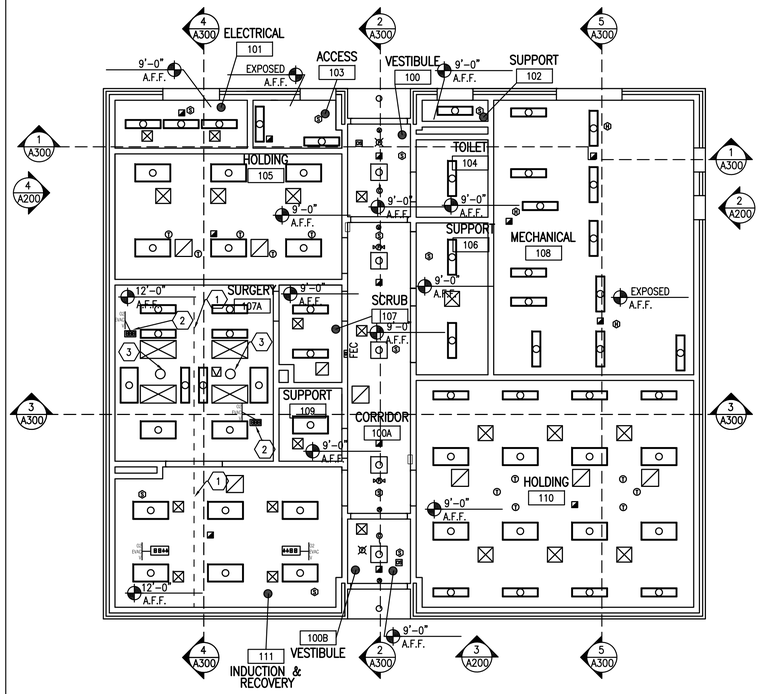

1 REFLECTED CEILING PLAN

SCALE: 1/8"=1'-0"

SCALE: 1/8"=1'-0" (IN FEET) 0 4' 8' 16'

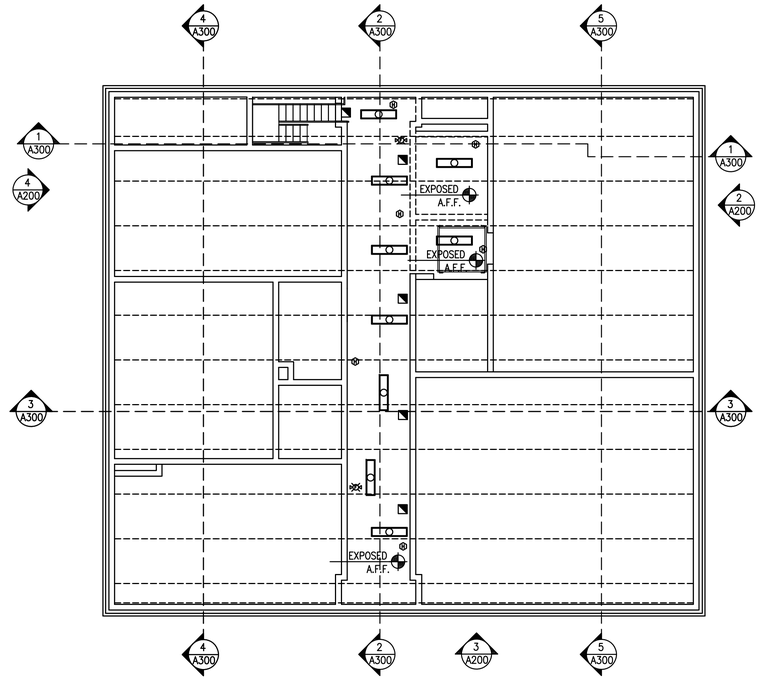

2 EQUIPMENT PLATFORM REFLECTED CEILING PLAN

SCALE: 1/8"=1'-0"

SCALE: 1/8"=1'-0" (IN FEET) 0 4' 8' 16'

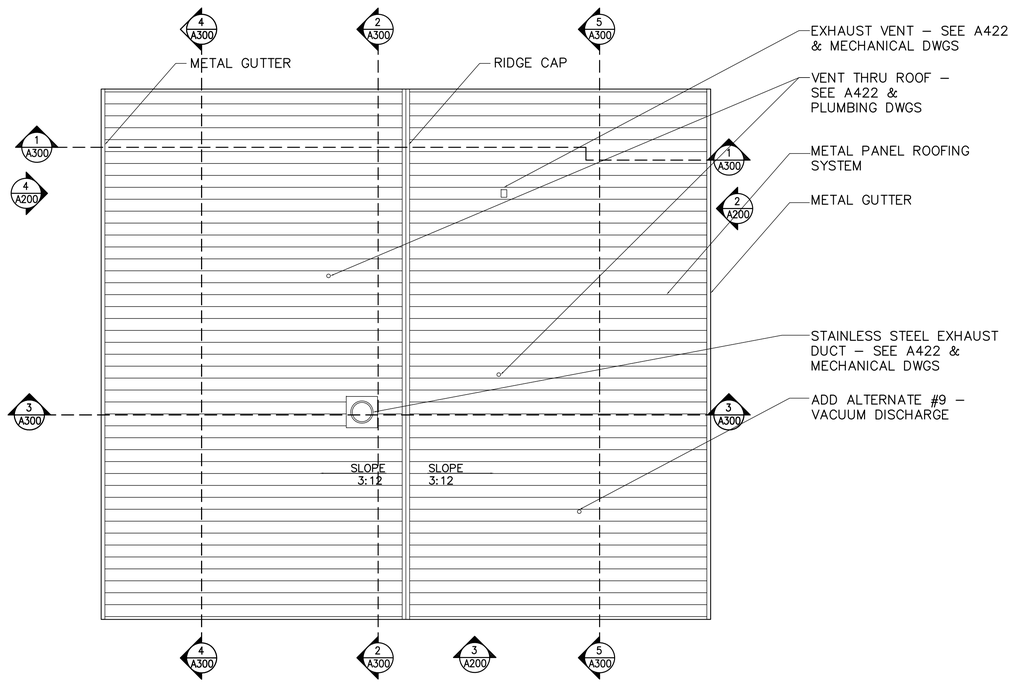

3 ROOF PLAN

SCALE: 1/8"=1'-0"

SCALE: 1/8"=1'-0" (IN FEET) 0 4' 8' 16'

REFLECTED CEILING PLAN KEYNOTES:

1. OVERHEAD HOIST & RAIL. SEE XXX.
2. MEDICAL GAS & ELECTRICAL CONNECTIONS, SEE MEP DRAWINGS.
3. OFCI SURGICAL LIGHTS. SEE A400 SERIES FOR ADDITIONAL INFORMATION.

REFLECTED CEILING PLAN GENERAL NOTES:

1. CEILING HEIGHTS ARE 9'–0" A.F.F. UNLESS OTHERWISE NOTED.
2. REFER TO ELECTRICAL DRAWINGS FOR LIGHTING FIXTURE LEGEND, TYP.
3. REFER TO HVAC DRAWINGS FOR DIFFUSER, SUPPLY FIXTURES, TYP.
4. UNO, ALIGN LIGHTS, DIFFUSERS & ACCESS PANELS IN GWB CEILINGS.

REFLECTED CEILING PLAN LEGEND:

- LAY–IN CEILING GRID, <APC–1> U.N.O.
- GWB CEILING, <GWB–1> U.N.O.
- <APC–1> 2'x2'x1" LAY IN ACOUSTIC PANEL CEILING
- <GYP–1> GYPSUM BOARD CEILING
- SUPPLY AIR DIFFUSER
- EXHAUST AIR REGISTER
- LIGHT FIXTURE
- LIGHT FIXTURE
- LIGHT FIXTURE
- SECURITY CAMERA
- TELEMETRY CAMERA
- EXIT SIGN
- UP LABORATORY UTILITY PANEL SEE 8/402
- OS OCCUPANCY SENSOR
- CEILING ACCESS PANEL
- S CEILING MOUNTED SMOKE DETECTOR
- H CEILING MOUNTED THERMAL DETECTOR
- S CEILING MOUNTED FIRE ALARM SPEAKER
- F CEILING MOUNTED FIRE ALARM HORN/STROBE
- F CEILING MOUNTED FIRE STROBE LIGHT
- WA WIRELESS ANTENNA OUTLET
- EXHAUST PENETRATIONS
- X'–XX" A.F.F. HEIGHT OF FINISHED CEILING ABOVE FINISH FLOOR ELEVATION

LINETYPE LEGEND:

- NEW PARTITION
- EXISTING CONSTRUCTION

Wagner Architecture, pllc
92 ELAM COURT
NEW HILL, NORTH CAROLINA 27562
TEL. (919) 612.5050

Kramer Engineering Services, pllc
5517 Cascade Dr., Chapel Hill, NC 27514
TEL (919)933-3350
email: donna@kespllc.com
Firm license: P-1099

bennett&pless
formerly LHC STRUCTURAL ENGINEERS
5430 Wade Park Blvd, Suite 400
Raleigh, NC 27607
Tel 919 832 5587

Copyright 2022 • Bennett & Pless, Inc.
All Rights Reserved

B&P Job Number 22.08.048

NV5
NV5 ENGINEERS AND CONSULTANTS, INC.
3300 REGENCY PARKWAY, STE 100
CARY, NC 27518
P: 919.851.1912 www.NV5.com
NC License # F-1333
formerly CALYX Engineers + Consultants

KIMBERLY ANN WAGNER REGISTERED ARCHITECT 10244 NORTH CAROLINA GARNER, NC

WAGNER ARCHITECTURE PLLC Registered Architectural Firm 51882 North Carolina GARNER, NC

5-18-23

PREPARED FOR
NORTH CAROLINA STATE UNIVERSITY
COLLEGE OF VETERINARY MEDICINE

TRUE NORTH

PLAN NORTH

TRANSLATIONAL RESEARCH FACILITY

revisions

building number

cadd file number

drawn by RFW

checked by KAW

date ISSUED FOR CONSTRUCTION–05/18/23

project number
NCSU CODE: 42124
ITEM: 305
WA 202207
SCO#: 21–24030–01A

REFLECTED CEILING PLANS & ROOF PLAN

sheet number: A120

revision number:

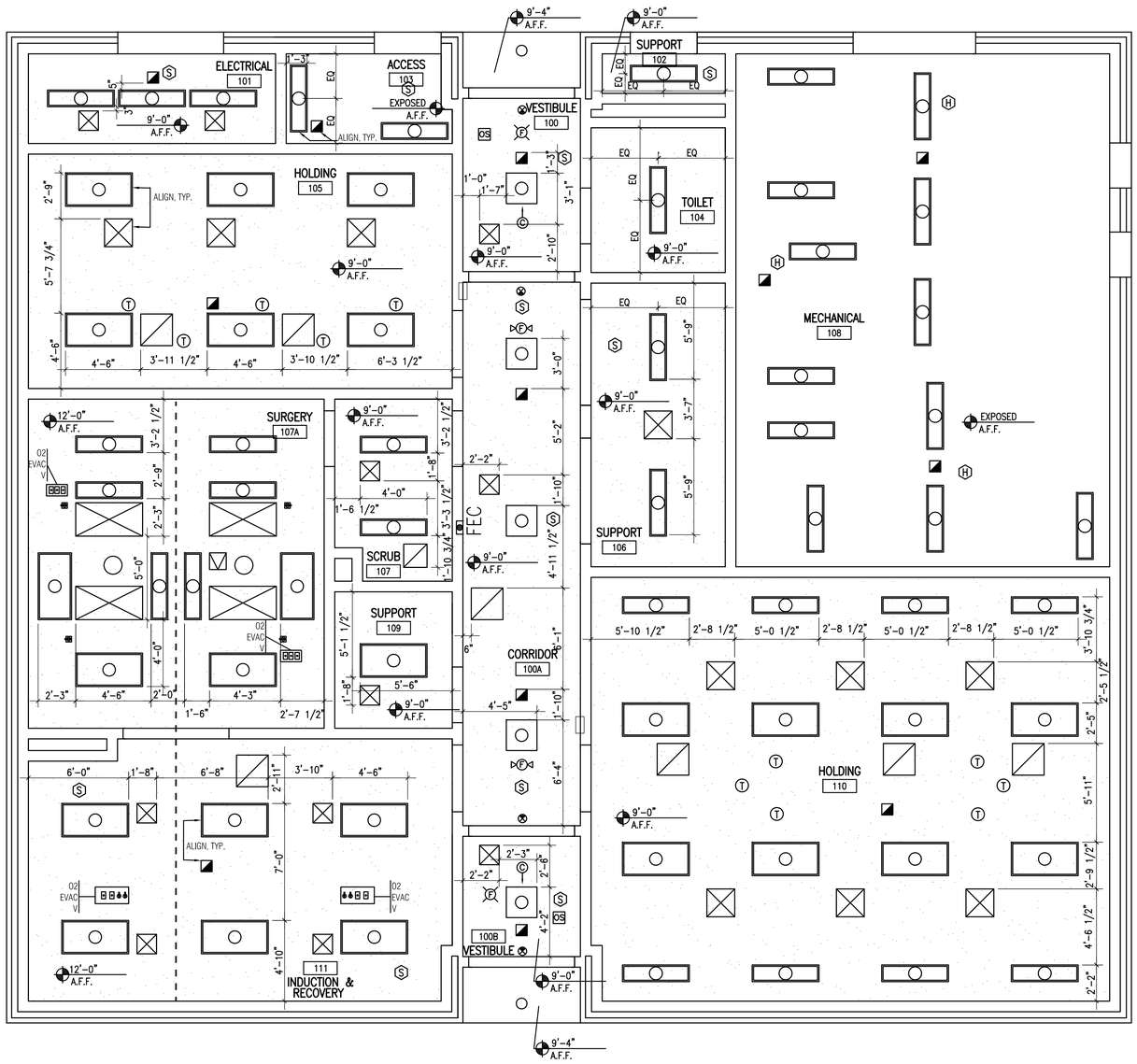

1 ENLARGED REFLECTED CEILING PLAN - DIMENSIONS

SCALE: 1/4"=1'-0"

SCALE: 1/4"=1'-0" (IN FEET) 0 2' 4' 8'

REFLECTED CEILING PLAN KEYNOTES:

1. OVERHEAD HOIST & RAIL. SEE XXX.
2. MEDICAL GAS & ELECTRICAL CONNECTIONS, SEE MEP DRAWINGS.
3. OFCI SURGICAL LIGHTS. SEE A400 SERIES FOR ADDITIONAL INFORMATION.

REFLECTED CEILING PLAN GENERAL NOTES:

1. CEILING HEIGHTS ARE 9'-0" A.F.F. UNLESS OTHERWISE NOTED.
2. REFER TO ELECTRICAL DRAWINGS FOR LIGHTING FIXTURE LEGEND, TYP.
3. REFER TO HVAC DRAWINGS FOR DIFFUSER, SUPPLY FIXTURES, TYP.
4. UNO, ALIGN LIGHTS, DIFFUSERS & ACCESS PANELS IN GWB CEILINGS.

REFLECTED CEILING PLAN LEGEND:

- LAY-IN CEILING GRID, <APC-1> U.N.O.
- GWB CEILING, <GWB-1> U.N.O.
- <APC-1> 2'x2'x1" LAY IN ACOUSTIC PANEL CEILING
- <GYP-1> GYPSUM BOARD CEILING
- SUPPLY AIR DIFFUSER
- EXHAUST AIR REGISTER
- LIGHT FIXTURE
- LIGHT FIXTURE
- LIGHT FIXTURE
- SECURITY CAMERA
- TELEMETRY CAMERA
- EXIT SIGN
- UP LABORATORY UTILITY PANEL SEE 8/402
- OS OCCUPANCY SENSOR
- CEILING ACCESS PANEL
- S CEILING MOUNTED SMOKE DETECTOR
- H CEILING MOUNTED THERMAL DETECTOR
- S CEILING MOUNTED FIRE ALARM SPEAKER
- F CEILING MOUNTED FIRE ALARM HORN/STROBE
- F CEILING MOUNTED FIRE STROBE LIGHT
- WA WIRELESS ANTENNA OUTLET
- EXHAUST PENETRATIONS
- X'-XX" A.F.F. HEIGHT OF FINISHED CEILING ABOVE FINISH FLOOR ELEVATION

LINETYPE LEGEND:

- NEW PARTITION
- EXISTING CONSTRUCTION

Wagner Architecture, pllc
92 ELAM COURT
NEW HILL, NORTH CAROLINA 27562
TEL. (919) 612.5050

Kramer Engineering Services, pllc
5517 Cascade Dr., Chapel Hill, NC 27514
TEL (919)933-3350
email: donna@kespllc.com
Firm license: P-1099

bennett&pless
formerly LHC STRUCTURAL ENGINEERS
5430 Wade Park Blvd, Suite 400
Raleigh, NC 27607
Tel 919 832 5587

Copyright 2022 • Bennett & Pless, Inc.
All Rights Reserved

B&P Job Number 22.08.048

NV5
NV5 ENGINEERS AND CONSULTANTS, INC.
3300 REGENCY PARKWAY, STE 100
CARY, NC 27518
P: 919.851.1912 www.NV5.com
NC License # F-1333
formerly CALYX Engineers + Consultants

KIMBERLY ANN WAGNER REGISTERED ARCHITECT 10244 NORTH CAROLINA GARNER, NC
WAGNER ARCHITECTURE PLLC Registered Architectural Firm 51882 North Carolina GARNER, NC
5-18-23

PREPARED FOR
NORTH CAROLINA STATE UNIVERSITY
COLLEGE OF VETERINARY MEDICINE

TRUE NORTH
PLAN NORTH

TRANSLATIONAL RESEARCH FACILITY

revisions

building number

cadd file number

drawn by RFW

checked by KAW

date ISSUED FOR CONSTRUCTION-05/18/23

project number
NCSU CODE: 42124
ITEM: 305
WA 202207
SCO#: 21-24030-01A

ENLARGED REFLECTED CEILING PLAN (MAIN FLOOR) - DIMENSIONS

sheet number: A121

revision number:

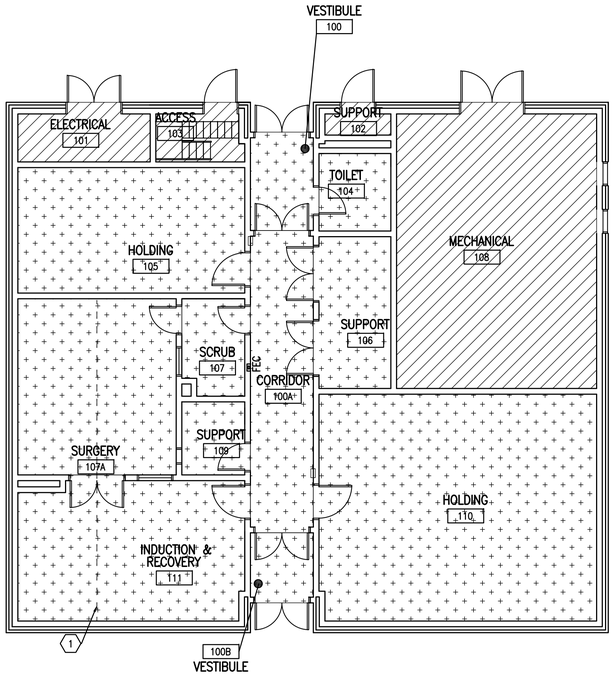

1 FINISH PLAN

SCALE: 1/8"=1'-0"

SCALE: 1/8"=1'-0" (IN FEET) 0 4' 8' 16'

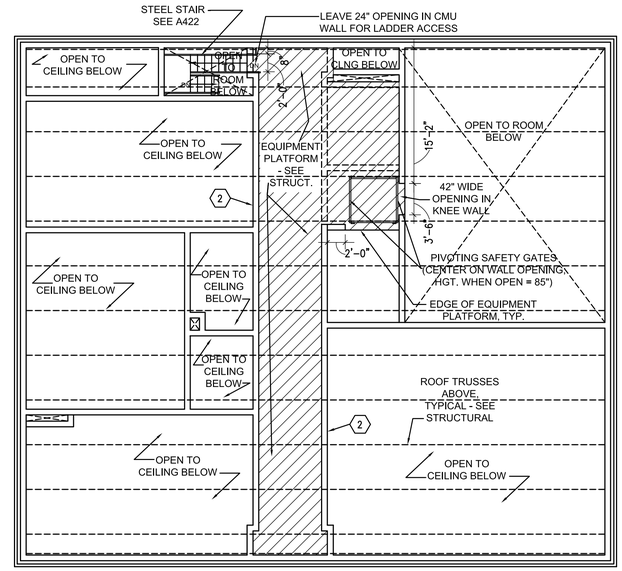

2 FINISH PLAN - EQUIPMENT PLATFORM

SCALE: 1/8"=1'-0"

SCALE: 1/8"=1'-0" (IN FEET) 0 4' 8' 16'

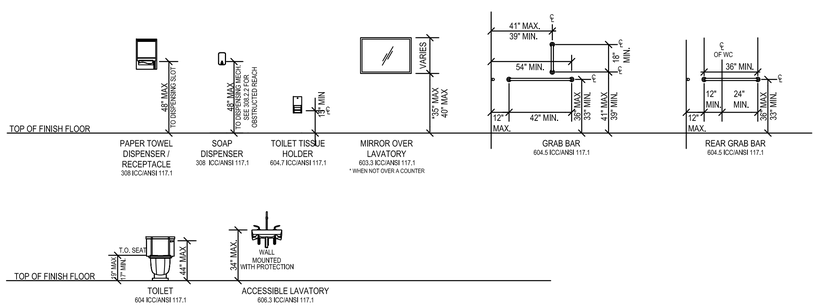

3 TOILET ACCESSORIES MOUNTING HEIGHTS

SCALE: NTS

FINISH PLAN KEYNOTES:

1. PAINT STEEL BEAM, HPC-1
2. PAINT STEEL BENT PLATE AT EDGE OF CONCRETE EQUIPMENT PLATFORM, HPC-1.

FINISH KEY:

RF-1

SC-1 – ADD ALTERNATE #4

FINISH SCHEDULE

RM #	ROOM NAME	FLOOR	BASE	WALLS NORTH	WALLS EAST	WALLS SOUTH	WALLS WEST	CEILING	REMARKS
100	VESTIBULE	RF-1	RF-1	HPC-1	HPC-1	HPC-1	HPC-1	HPC-1	–
100A	CORRIDOR	RF-1	RF-1	HPC-1	HPC-1	HPC-1	HPC-1	HPC-1	–
100B	VESTIBULE	RF-1	RF-1	HPC-1	HPC-1	HPC-1	HPC-1	HPC-1	–
101	ELECTRICAL	CONC.	–	EXPOSED	EXPOSED	EXPOSED	EXPOSED	EXPOSED	3
102	SUPPORT	CONC.	–	EXPOSED	EXPOSED	EXPOSED	EXPOSED	EXPOSED	3
103	ACCESS	CONC.	–	EXPOSED	EXPOSED	EXPOSED	EXPOSED	EXPOSED	3
104	TOILET	RF-1	RF-1	HPC-1	HPC-1	HPC-1	HPC-1	HPC-1	–
105	HOLDING	RF-1	RF-1	HPC-1	HPC-1	HPC-1	HPC-1	HPC-1	–
106	SUPPORT	RF-1	RF-1	HPC-1	HPC-1	HPC-1	HPC-1	HPC-1	–
107	SCRUB	RF-1	RF-1	HPC-1	HPC-1	HPC-1	HPC-1	HPC-1	–
107A	SURGERY	RF-1	RF-1	HPC-1	HPC-1	HPC-1	HPC-1	HPC-1	–
108	MECHANICAL	CONC.	–	EXPOSED	EXPOSED	EXPOSED	EXPOSED	EXPOSED	3
109	SUPPORT	RF-1	RF-1	HPC-1	HPC-1	HPC-1	HPC-1	HPC-1	–
110	HOLDING	RF-1	RF-1	HPC-1	HPC-1	HPC-1	HPC-1	HPC-1	–
111	INDUCTION & RECOVERY	RF-1	RF-1	HPC-1	HPC-1	HPC-1	HPC-1	HPC-1	–

GENERAL NOTES:
1. HM FRAMES WILL BE COATED A DIFFERENT COLOR, WITH HPC, AS CHOSEN BY THE ARCHITECT FROM THE MFGR'S FULL RANGE.
2. CEILING PLANE TO BE COATED CEILING WHITE WITH HPC.
3. ADD ALTERNATE #4 – FLOOR SHALL BE SEALED CONCRETE.

ABBREVIATIONS:
SV – SHEET VINYL
RF – RESINOUS FLOORING
SVB – SHEET VINYL BASE
RB – RUBBER BASE
CT – CERAMIC TILE
HPC – HIGH PERFORMANCE COATING
HPC-R – HIGH PERFORMANCE COATING, REINFORCED
CPT – CARPET TILE
VCT – VINYL COMPOSITION TILE
APC – ACOUSTICAL PANEL LAY IN CEILING
FRP – SUSPENDED SANITARY PLASTIC CEILING
CONC – SEALED CONCRETE

LINETYPE LEGEND:

NEW PARTITION

EXISTING CONSTRUCTION

Wagner Architecture, pllc
92 ELAM COURT
NEW HILL, NORTH CAROLINA 27562
TEL. (919) 612.5050

Kramer Engineering Services, pllc
5517 Cascade Dr., Chapel Hill, NC 27514
TEL (919)933-3350
email: donna@kespllc.com
Firm license: P-1099

bennett&pless
formerly LHC STRUCTURAL ENGINEERS
5430 Wade Park Blvd, Suite 400
Raleigh, NC 27607
Tel 919 832 5587
Copyright 2022 ● Bennett & Pless, Inc.
All Rights Reserved
B&P Job Number 22.08.048

NV5 ENGINEERS AND CONSULTANTS, INC.
3300 REGENCY PARKWAY, STE 100
CARY, NC 27518
P: 919.851.1912 www.NV5.com
NC License # F-1333
formerly CALYX Engineers + Consultants

KIMBERLY ANN WAGNER REGISTERED ARCHITECT 10244 NORTH CAROLINA GARNER, NC

WAGNER ARCHITECTURE PLLC 51882 North Carolina Registered Architectural Firm GARNER, NC

5-18-23

PREPARED FOR
NORTH CAROLINA STATE UNIVERSITY
COLLEGE OF VETERINARY MEDICINE

TRUE NORTH

PLAN NORTH

TRANSLATIONAL RESEARCH FACILITY

revisions

building number

cadd file number

drawn by RFW

checked by KAW

date ISSUED FOR CONSTRUCTION–05/18/23

project number
NCSU CODE: 42124
ITEM: 305
WA 202207
SCO#: 21–24030–01A

FINISH PLAN & SCHEDULE

sheet number: A130

revision number:

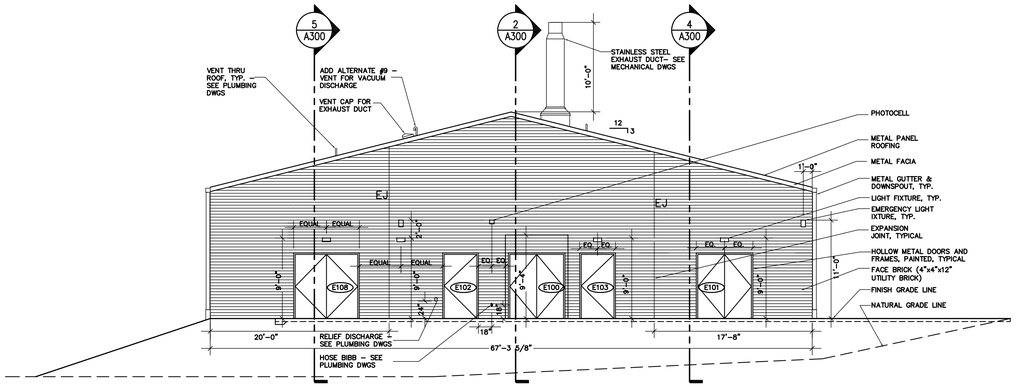

1 NORTH ELEVATION
SCALE: 1/8"=1'–0"

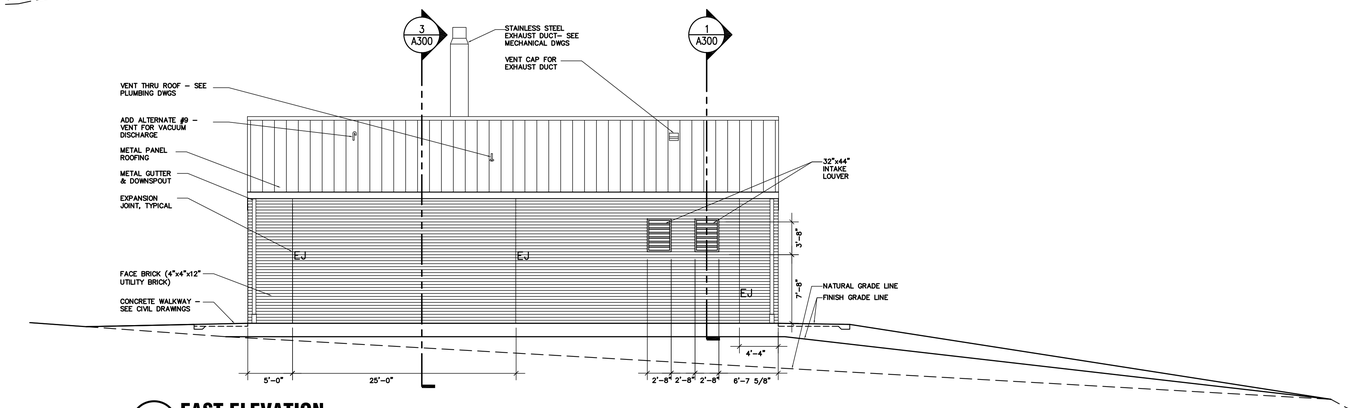

2 EAST ELEVATION
SCALE: 1/8"=1'–0"

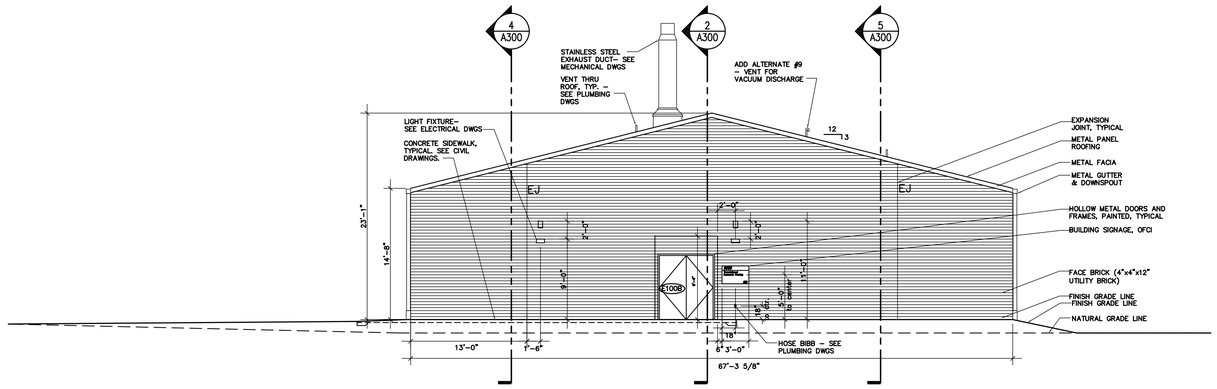

3 SOUTH ELEVATION
SCALE: 1/8"=1'–0"

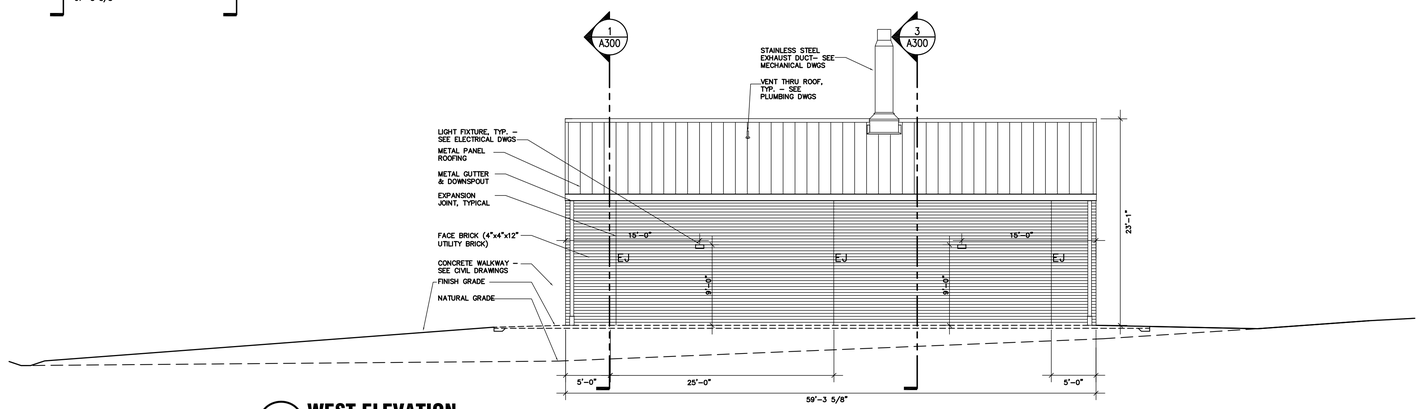

4 WEST ELEVATION
SCALE: 1/8"=1'–0"

Wagner Architecture, pllc
92 ELAM COURT
NEW HILL, NORTH CAROLINA 27562
TEL. (919) 612.5050

Kramer Engineering Services, pllc
5517 Cascade Dr., Chapel Hill, NC 27514
TEL (919)933-3350
email: donna@kespllc.com
Firm license: P-1099

bennett&pless
formerly LHC STRUCTURAL ENGINEERS
5430 Wade Park Blvd, Suite 400
Raleigh, NC 27607
Tel 919 832 5587

Copyright 2022 ● Bennett & Pless, Inc.
All Rights Reserved

B&P Job Number 22.08.048

NV5 ENGINEERS AND CONSULTANTS, INC.
3300 REGENCY PARKWAY, STE 100
CARY, NC 27518
P: 919.851.1912 www.NV5.com
NC License # F-1333
formerly CALYX Engineers + Consultants

KIMBERLY ANN WAGNER REGISTERED ARCHITECT 10244 NORTH CAROLINA GARNER, NC
WAGNER ARCHITECTURE PLLC Registered Architecture 51882 North Carolina GARNER, NC
5-18-23

PREPARED FOR
NORTH CAROLINA STATE UNIVERSITY
COLLEGE OF VETERINARY MEDICINE

TRUE NORTH
PLAN NORTH

TRANSLATIONAL RESEARCH FACILITY

revisions

building number

cadd file number

drawn by RFW

checked by KAW

date ISSUED FOR CONSTRUCTION–05/18/23

project number
NCSU CODE: 42124
ITEM: 305
WA 202207
SCO#: 21–24030–01A

BUILDING ELEVATIONS

sheet number: A200

revision number:

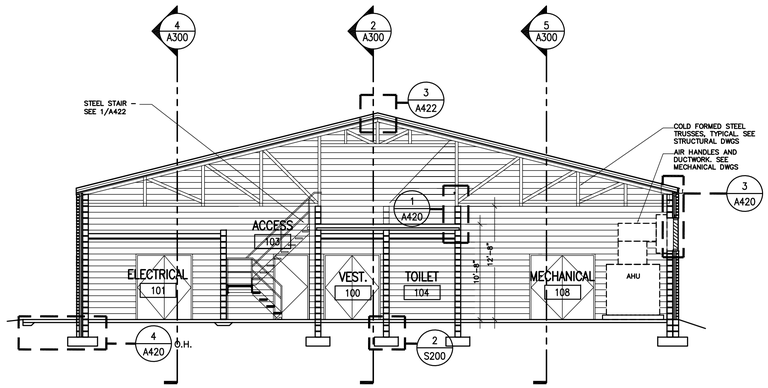

1 BUILDING SECTION - EAST/WEST
SCALE: 1/8"=1'-0"

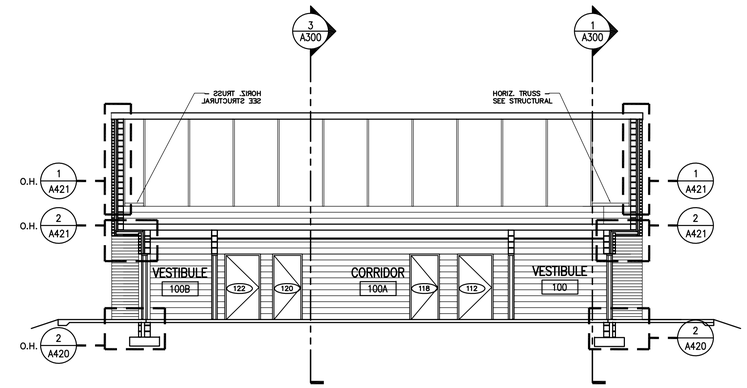

2 BUILDING SECTION - NORTH/SOUTH
SCALE: 1/8"=1'-0"

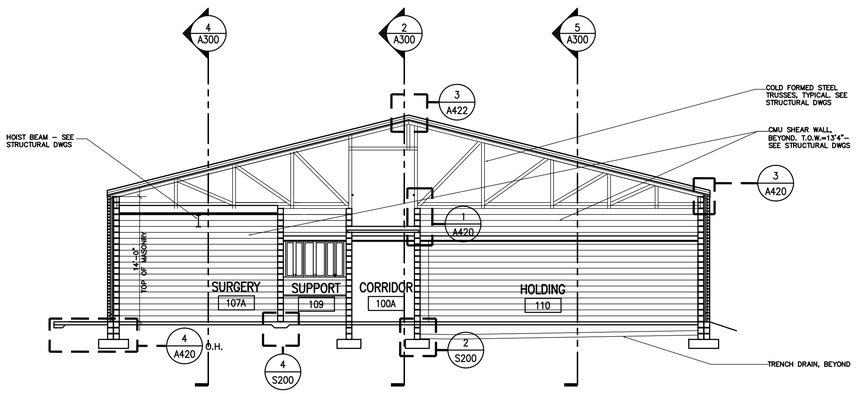

3 BUILDING SECTION - EAST/WEST
SCALE: 1/8"=1'-0"

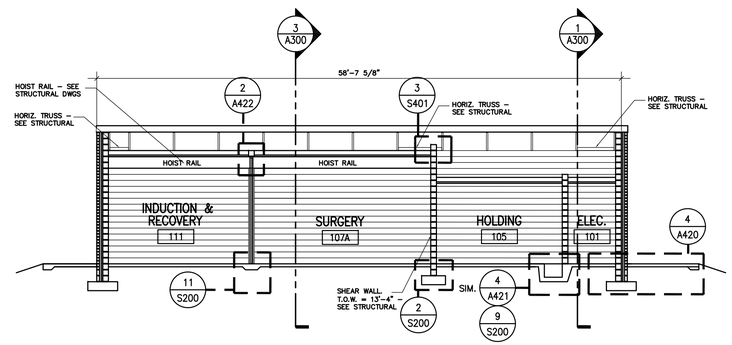

4 BUILDING SECTION - NORTH/SOUTH
SCALE: 1/8"=1'-0"

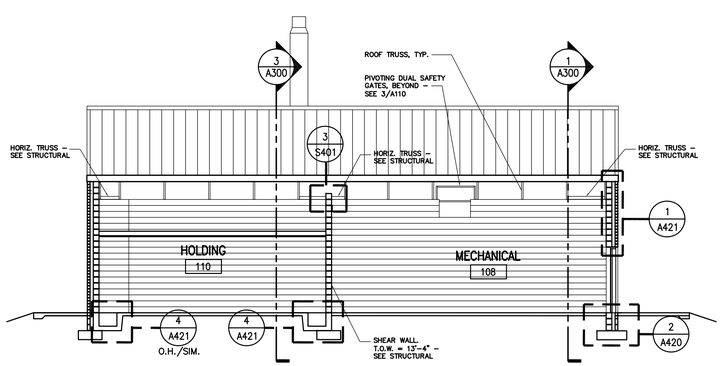

5 BUILDING SECTION - NORTH/SOUTH
SCALE: 1/8"=1'-0"

Wagner Architecture, pllc
92 ELAM COURT
NEW HILL, NORTH CAROLINA 27562
TEL. (919) 612.5050

Kramer Engineering Services, pllc
5517 Cascade Dr., Chapel Hill, NC 27514
TEL (919)933-3350
email: donna@kespllc.com
Firm license: P-1099

bennett&pless
formerly LHC STRUCTURAL ENGINEERS
5430 Wade Park Blvd, Suite 400
Raleigh, NC 27607
Tel 919 832 5587

Copyright 2022 ● Bennett & Pless, Inc.
All Rights Reserved

B&P Job Number 22.08.048

NV5
NV5 ENGINEERS AND CONSULTANTS, INC.
3300 REGENCY PARKWAY, STE 100
CARY, NC 27518
P: 919.851.1912 www.NV5.com
NC License # F-1333
formerly CALYX Engineers + Consultants

KIMBERLY ANN WAGNER REGISTERED ARCHITECT 10244 NORTH CAROLINA GARNER, NC
WAGNER ARCHITECTURE, PLLC 51882 North Carolina Registered Architectural Firm GARNER, NC
5-18-23

PREPARED FOR
NORTH CAROLINA STATE UNIVERSITY
COLLEGE OF VETERINARY MEDICINE

TRUE NORTH
PLAN NORTH

TRANSLATIONAL RESEARCH FACILITY

revisions

building number

cadd file number

drawn by RFW

checked by KAW

date ISSUED FOR CONSTRUCTION–05/18/23

project number
NCSU CODE: 42124
ITEM: 305
WA 202207
SCO#: 21–24030–01A

BUILDING SECTIONS

sheet number: A300

revision number:

CASEWORK: NOT TO SCALE

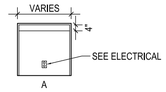

KNEE OPENINGS - KS

NOTES:
1. FIELD LOCATE GROMMETS AT ALL KS PER OWNER'S RQMTS.
2. SEE DETAIL 8/A500 FOR DETAILED INFORMATION.

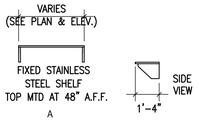

SHELVING - SH

NOTES: 1. PROVIDE WITH APPROPRIATE WALL MOUNTING RAILS PER MANUFACTURER.
2. QUANTITY OF SHELVES INDICATED BY SUFFIX "-Q#", WHERE # IS QUANTITY.

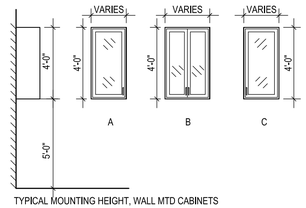

TYPICAL MOUNTING HEIGHT, WALL MTD CABINETS

WALL CABINET - W

16" DEEP U.N.O.

EQUPMENT SCHEDULE

MARK	SIZE W x D x H	NAME	ROOM	FURNISHED/ INSTALLED BY	MANUF.	MODEL	REMARKS
001	N/A	DUAL CEILING MOUNT SURGICAL LIGHTS	107A	OFCI	AVANTE	VISION LED GEN2 SURGERY LIGHT	WITH EXTENSION ARM FOR 12'-0" AFF CEILING HEIGHT.
002	SWITCH – 11.25" X 4.02" X 1.06" ROUTER – 20CM X 3.7CM X 13.6CM DEEP APR2 – 14CM X 10.5CM X 4CM	TELEMETRY EQUIPMENT	109	OFOI	–	–	–

CASEWORK FINISH SCHEDULE

CASEWORK	SHELVING	TALL CABINETS	COLOR	HARDWARE
PAINTED METAL	PAINTED METAL	N/A	TO BE SELECTED FROM MFGR'S FULL RANGE	SATIN CHROME WIRE PULLS AND STAINLESS STEEL HINGES

COUNTERTOP MATERIAL SCHEDULE

MARK	MATERIAL	REMARKS
S	STAINLESS STEEL	1" THICK CONTINUOUS TOP WITH MARINE EDGES.

SINK SCHEDULE

MARK	SIZE W x L x D	MATERIAL	MANUF.	MODEL	REMARKS
SK–1	32" W X 37" H X 27.5" D	SS	MAC MEDICAL	SS32–IR–IRD–EYE–TV–MB	–

NOTES:
1. REFER TO PLANS FOR FIXTURE CONFIGURATION AND PLACEMENT. SOME SINKS WILL NOT REQUIRE ALL FIXTURES LISTED.
2. REFER TO FIXTURE SCHEDULE.
3. ALL FITTINGS AND FIXTURES SCHEDULED ABOVE ARE BASIS OF DESIGN. SEE PROJECT MANUAL FOR ADDITIONAL INFORMATION AND ALTERNATE MANUFACTURERS.

CASEWORK DESIGNATIONS

EXAMPLES:

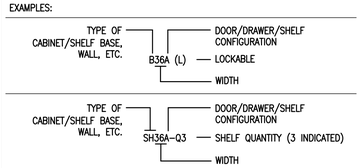

LABORATORY FURNISHINGS SYMBOLS

- LAB SINK WITH CORNER DRAIN
- LAB SINK WITH CENTER DRAIN
- FUME HOOD
- BIOSAFETY CABINET
- UPPER WALL CABINET
- UPPER WALL SHELVING (MOUNTED ON WALL RAILS)
- 026 — EQUIPMENT NUMBER
- E +36" — TOP MATERIAL: SEE COUNTERTOP MATERIAL LEGEND. DIMENSION IS HEIGHT AFF.
- DRYING RACK
- LEV
- EMERGENCY SHOWER AND EYEWASH (FLIP–DOWN)
- CG — CORNER GUARD
- 3 / A2001 — ELEVATION
- 1 / A2200 — INTERIOR ELEVATION DRAWING & SHEET LOCATION
- 22 — CASEWORK ELEVATION
- DWG. NO. / SHEET NO. — DETAIL SECTION
- 3 / A2200 — SECTION DRAWING & SHEET LOCATION
- 7 / A5.2 — ENLARGED PLAN OR DETAIL DRAWING & SHEET LOCATION

LAB FIXTURE GROUP SPACING

SEE PLANS FOR LOCATION, TYPE AND QUANTITY

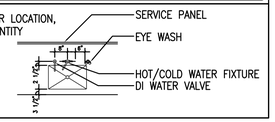

LABORATORY FURNISHINGS ABBREVIATIONS:

MARK	DESCRIPTION	FIXTURE COLOR*	FIXTURE CODE*
BSC	BIOSAFETY CABINET		
CA	HOUSE COMPRESSED AIR	ORANGE	AIR
CFH	CHEMICAL FUME HOOD		
CO2	CARBON DIOXIDE	PINK	CO2
CM	CONSTRUCTION MANAGER		
CSP	CEILING SERVICE PANEL		
CV	CONSTANT VOLUME		
CW	COLD WATER	DARK GREEN	CW
CYL	CYLINDER (REGULATED GAS)	LIGHT BLUE	
D	DATA, DATA OUTLET		
DI	PURIFIED WATER (DEIONIZED)	WHITE	DI
E	ELECTRICAL POWER		
EC	ELECTRICAL CONTRACTOR		
EP	EMERGENCY/BACKUP POWER		
ES	EMERGENCY SHOWER		
EVAC	MEDICAL VACUUM FOR ANESHETIC		
FP	FILLER PANEL		
FD	FLOOR DRAIN		
HW	HOT WATER	RED	HW
G	NATURAL GAS	DARK BLUE	GAS
LEV	LOCAL EXHAUST VENT		
LF	LAB FURNISHINGS		
LN	LIQUID NITROGEN		
LFC	LAB FURNISHINGS CONTRACTOR		
LPC	LAB PLUMBING CONTRACTOR		
MC	MECHANICAL CONTRACTOR		
NIC	NOT IN CONTRACT		
O2	MEDICAL OXYGEN GAS	LIGHT GREEN	OXY
RO	PURIFIED WATER (REVERSE OSMOSIS)	WHITE	RO
TW	TEPID (TEMPERED) WATER		
SK	SINK, SINK CABINET		
V	VACUUM	YELLOW	VAC

* SERVICE COLORS & CODES BASED ON SEFA 7 STANDARDS.

Wagner Architecture, pllc
92 ELAM COURT
NEW HILL, NORTH CAROLINA 27562
TEL. (919) 612.5050

Kramer Engineering Services, pllc
5517 Cascade Dr., Chapel Hill, NC 27514
TEL (919)933-3350
email: donna@kespllc.com
Firm license: P-1099

bennett&pless
formerly LHC STRUCTURAL ENGINEERS
5430 Wade Park Blvd, Suite 400
Raleigh, NC 27607
Tel 919 832 5587

Copyright 2022 ● Bennett & Pless, Inc.
All Rights Reserved

B&P Job Number 22.08.048

NV5 ENGINEERS AND CONSULTANTS, INC.
3300 REGENCY PARKWAY, STE 100
CARY, NC 27518
P: 919.851.1912 www.NV5.com
NC License # F-1333
formerly CALYX Engineers + Consultants

KIMBERLY ANN WAGNER REGISTERED ARCHITECT 10244 NORTH CAROLINA GARNER, NC
WAGNER ARCHITECTURE, PLLC Registered Architecture Firm 51882 North Carolina GARNER, NC
5-18-23

PREPARED FOR
NORTH CAROLINA STATE UNIVERSITY
COLLEGE OF VETERINARY MEDICINE

TRUE NORTH
PLAN NORTH

TRANSLATIONAL RESEARCH FACILITY

revisions

building number

cadd file number

drawn by RFW

checked by KAW

date ISSUED FOR CONSTRUCTION–05/18/23

project number
NCSU CODE: 42124
ITEM: 305
WA 202207
SCO#: 21–24030–01A

LABORATORY ABBREVIATIONS, SYMBOLS & SCHEDULES

sheet number: A400

revision number:

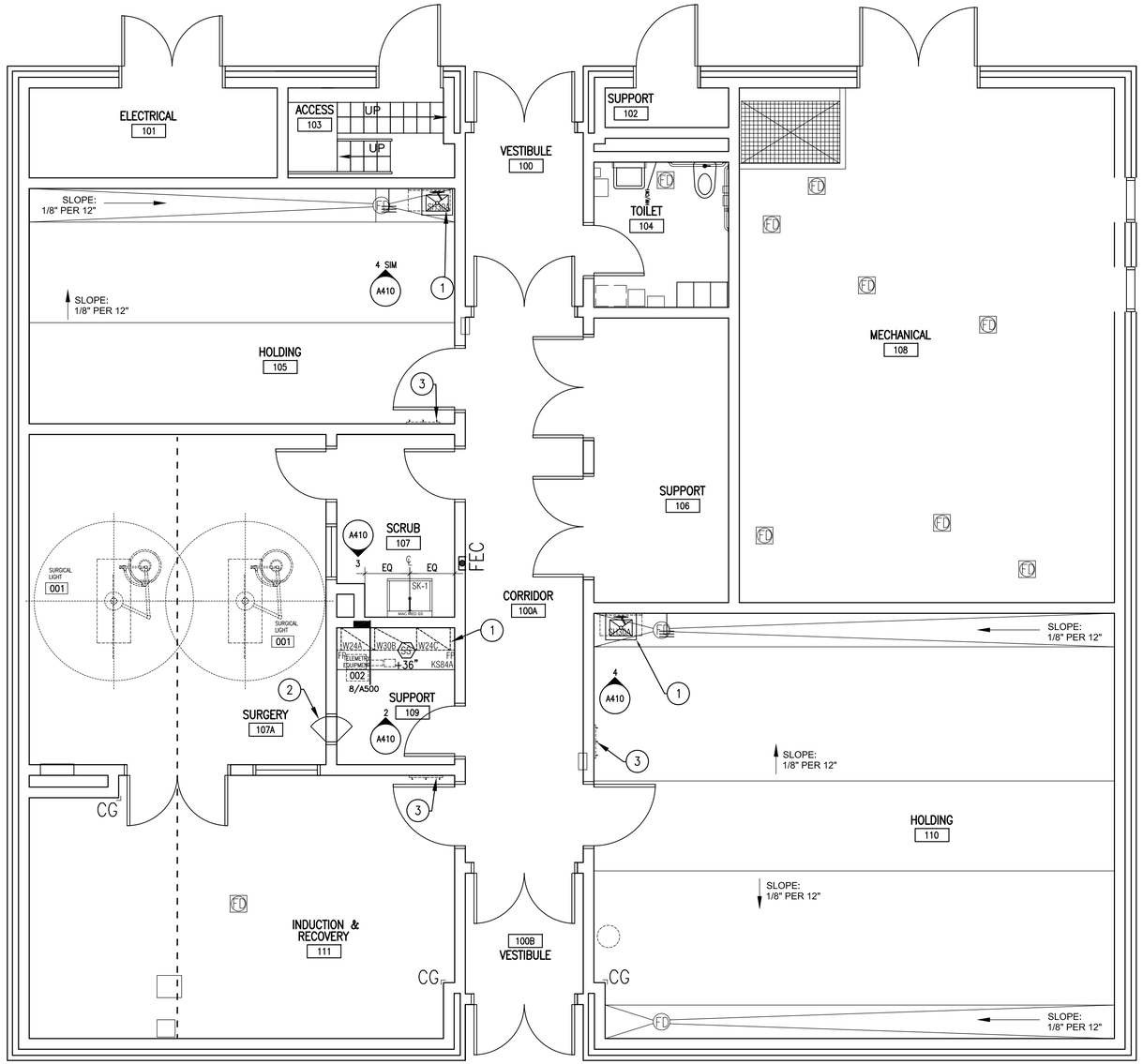

1 LABORATORY FURNISHINGS FLOOR PLAN

SCALE: 1/4"=1'-0"

SCALE: 1/4"=1'-0" (IN FEET)
0 2' 4' 8'

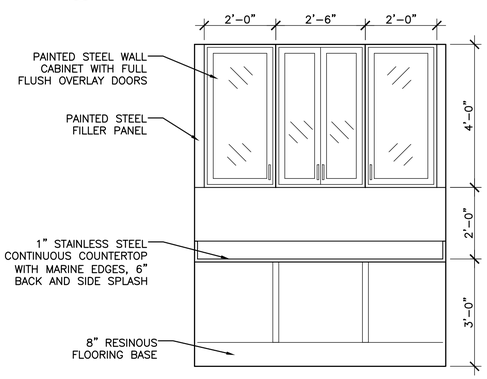

2 CASEWORK, ROOM 109

SCALE: 1/2"=1'-0"

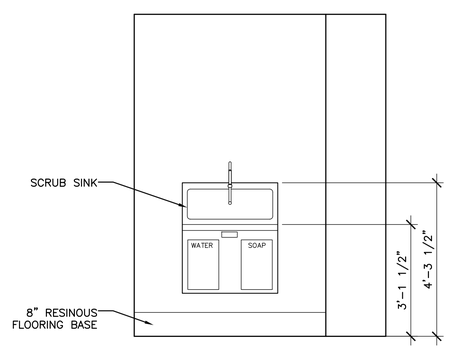

3 CASEWORK, ROOM 107

SCALE: 1/2"=1'-0"

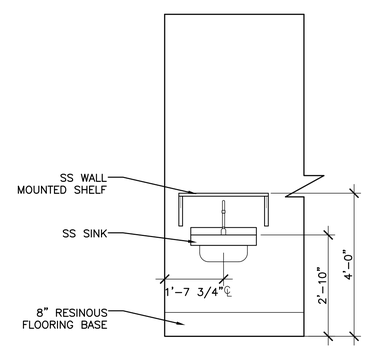

4 CASEWORK, ROOM 110 TYP

SCALE: 1/2"=1'-0"

KEYNOTES:

1. ADD ALTERNATE #4. CASEWORK.
2. SS PASS THROUGH (ADD ALT #4)
3. MOP RACK

LABORATORY FURNISHINGS GENERAL NOTES:

1. LAB FURNISHINGS DIVISION 11 CONTRACTOR SHALL CAREFULLY EXAMINE THE LABORATORY FURNISHINGS DRAWINGS AND ALL OTHER DRAWINGS TO PROPERLY DETERMINE CONTRACTUAL RESPONSIBILITIES.
2. FOR ACTUAL ROOM DIMENSIONS, REFER TO THE ARCHITECTURAL PLANS.
3. LAB FURNISHINGS DIVISION 11 CONTRACTOR SHALL FIELD VERIFY ALL DIMENSIONS BEFORE FABRICATION.
4. OVERALL LENGTH OF TOPS SHALL BE DETERMINED BY CASEWORK AND DIMENSIONS AS INDICATED ON PLANS. SUCH LENGTHS SHALL REMAIN CONSTANT REGARDLESS OF SUCCESSFUL BIDDER'S STANDARDS. TOPS TYPICAL SHALL OVERHANG 1" AT EACH END AND 1" FROM FRONT OF BASE CABINET. WHEN OVERALL DIMENSIONS ARE GIVEN, 1" OVERHANG IS INCLUDED.
5. ON WALL-TO-WALL CASEWORK ASSEMBLIES, THE "OPEN" SPACE DIMENSION SHALL BE DETERMINED IN THE FIELD. IF THERE IS MORE THAN ONE "OPEN" SPACE INDICATED, SPACE AVAILABLE FOR "OPEN" SPACE SHALL BE EVENLY DISTRIBUTED – U.N.O.
6. DIMENSIONS FOR COUNTERTOP HEIGHTS ARE NOMINAL WITHIN 3/4" OF THE REQUIRED HEIGHT.
7. ALL WALL BENCH TOPS SHALL BE 2'-9" DEEP INCLUDING THE BACKSPLASH, UNLESS OTHERWISE NOTED. ISLAND OR PENINSULA BENCHES SHALL BE 5'-6" WIDE UNLESS OTHERWISE NOTED ON DRAWINGS.
8. FILLER PANELS SHALL BE USED BETWEEN BACK OF CABINETS OR HOODS AND WALLS AT EXPOSED ENDS AND WHEN BASE CABINETS AND/OR HOODS ARE SET BACK-TO-BACK. FILLER PANELS SHALL ALSO BE USED AT THE ENDS OF BENCHES, ALL KNEE SPACES, AND AT ALL EXPOSED CORE AREAS.
9. ALL EXPOSED-TO-VIEW COUNTERTOP EDGES, BACKS OF SPLASHES, ALL EDGES OF TABLES, BACKS OF COUNTERTOPS AND SPLASHES SHALL BE CAULKED, FILLED, SEALED AND FINISHED.
10. ALL FURNITURE EXPOSED-TO-VIEW BACKS AND SIDES AND FILLER PANELS ARE TO BE FINISHED.
11. HIGH CASEWORK AND FREE-STANDING SHELVING SHALL BE RESTRAINED FROM OVERTURNING.
12. ARCHITECT WILL SELECT COLORS FOR ALL COMPONENTS OF PROJECT INDICATED IN DRAWINGS. COLOR SELECTION WILL BE FROM THE MANUFACTURER'S FULL RANGE OF COLORS.
13. ALL PENETRATIONS THROUGH COUNTERTOP SHALL BE CAULKED BY THE LAB FURNISHINGS DIVISION 11 CONTRACTOR WITH APPROVED ACID-RESISTANT SEALANT.
14. LOCATION OF EQUIPMENT, SUCH AS ISLAND BENCH SHELF SUPPORTS, OVERHEAD SERVICE CARRIERS, UMBILICAL ENCLOSURES, FUME HOODS, BRACES, OR ANY OTHER ITEMS THAT MAY INTERFERE WITH LIGHTING, STRUCTURAL OR MECHANICAL SYSTEMS SHALL BE CAREFULLY COORDINATED BY THE LAB FURNISHINGS DIVISION 11 CONTRACTOR, AND ANY DISCREPANCIES BROUGHT TO THE ARCHITECT'S ATTENTION IMMEDIATELY.
15. ANY TYPE OF UNISTRUT OR SLOTTED STANDARD FRAME SUPPORTS (USED FOR RACKS, SHELVING, ETC.) SHALL BE SPACED AND POSITIONED TO CLEAR FITTINGS, SINKS AND CUPSINKS.
16. ON WALLS WHERE UNISTRUTS OR SLOTTED STANDARDS RUN FULL HEIGHT AND INTERFERE WITH ELECTRICAL SERVICES, RACEWAYS SHALL BE WALL MOUNTED AND UNISTRUTS / STANDARDS CUT AS REQUIRED UNLESS OTHERWISE NOTED.
17. FOR LOCATION OF OVERHEAD SERVICE PANELS, LEVs, AND ANY OTHER FURNISHINGS THAT PENETRATE THE CEILING, SEE REFLECTED CEILING PLAN.
18. LAB SERVICE FITTINGS SHALL BE FURNISHED AND DELIVERED BY THE LF CONTRACTOR AND INSTALLED BY THE PLUMBING OR MECHANICAL PIPING CONTRACTORS. SINKS SHALL BE FURNISHED AND INSTALLED BY THE LF CONTRACTOR.
19. ALL PLUMBING/HVAC PIPING SYSTEM SUPPORTS SHALL BE FURNISHED AND INSTALLED BY THE PLUMBING/HVAC PIPING CONTRACTOR. SPACING, HANGERS, AND FASTENERS SHALL BE AS PER PIPE MANUFACTURER'S RECOMMENDATIONS.
20. DIVISION 32 CONTRACTOR SHALL FURNISH AND INSTALL ALL ELECTRICAL PLUG STRIPS. FOR INSTALLATION SEE ELECTRICAL AND LAB FURNISHINGS DETAILS DRAWINGS FOR QUANTITY, TYPE AND LOCATION.
21. UNLESS OTHERWISE NOTED, ALL UNISTRUT BRACKETS AND FITTINGS INDICATED ON THE LAB FURNISHINGS DOCUMENTS SHALL BE SUPPLIED, INSTALLED AND PAINTED BY THE LAB FURNISHINGS DIVISION 11 CONTRACTOR.
21. ALL JOINTS ARE TO BE COMPLETELY AND CONTINUOUSLY SEALED WITH AN APPROPRIATE SEALANT. THIS INCLUDES, BUT IS NOT LIMITED TO CEILINGS/WALLS/FLOORS, DOOR FRAMES TO WALL, EQUIPMENT ENCLOSURES TO ADJACENT FINISHES, DIFFUSERS, LIGHTING FIXTURES, AND ACCESS PANELS TO CEILINGS, AND CASEWORK TO WALLS. SEAL ALL DISSIMILAR MATERIALS.
22. IN ALL ANIMAL AREAS, ALL BLOCKING TO BE MANUFACTURED FROM A NON-ABSORPTIVE PRODUCT.

Wagner Architecture, pllc
92 ELAM COURT
NEW HILL, NORTH CAROLINA 27562
TEL. (919) 612.5050

Kramer Engineering Services, pllc
5517 Cascade Dr., Chapel Hill, NC 27514
TEL (919)933-3350
email: donna@kespllc.com
Firm license: P-1099

bennett&pless
formerly LHC STRUCTURAL ENGINEERS
5430 Wade Park Blvd, Suite 400
Raleigh, NC 27607
Tel 919 832 5587

Copyright 2022 ● Bennett & Pless, Inc.
All Rights Reserved

B&P Job Number 22.08.048

NV5
NV5 ENGINEERS AND CONSULTANTS, INC.
3300 REGENCY PARKWAY, STE 100
CARY, NC 27518
P: 919.851.1912 www.NV5.com
NC License # F-1333
formerly CALYX Engineers + Consultants

KIMBERLY ANN WAGNER REGISTERED ARCHITECT 10244 NORTH CAROLINA CARNER, NC

WAGNER ARCHITECTURE PLLC Registered Architecture Firm 51882 North Carolina CARNER, NC

5-18-23

PREPARED FOR
NORTH CAROLINA STATE UNIVERSITY
COLLEGE OF VETERINARY MEDICINE

TRUE NORTH
PLAN NORTH

TRANSLATIONAL RESEARCH FACILITY

revisions

building number

cadd file number

drawn by RFW

checked by KAW

date
ISSUED FOR CONSTRUCTION-05/18/23

project number
NCSU CODE: 42124
ITEM: 305
WA 202207
SCO#: 21-24030-01A

LABORATORY PLANS

sheet number: A410

revision number:

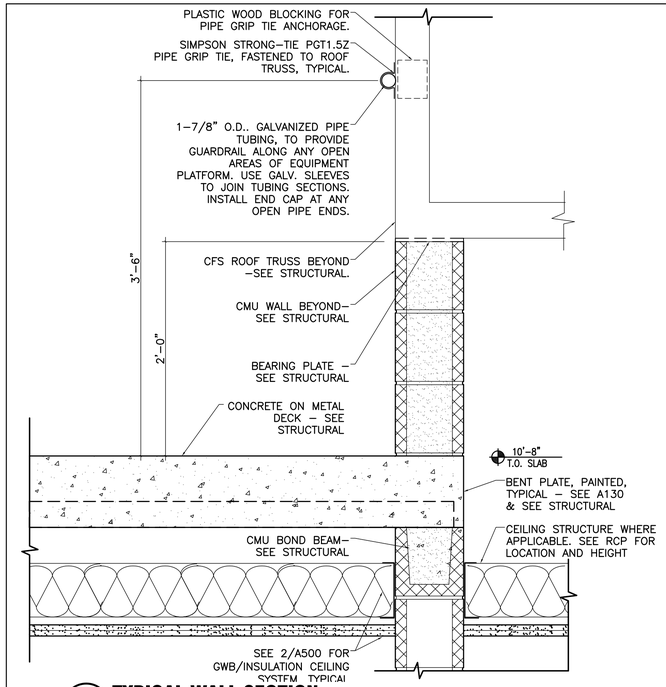

1A TYPICAL WALL SECTION
SCALE: 1 1/2" = 1'-0"

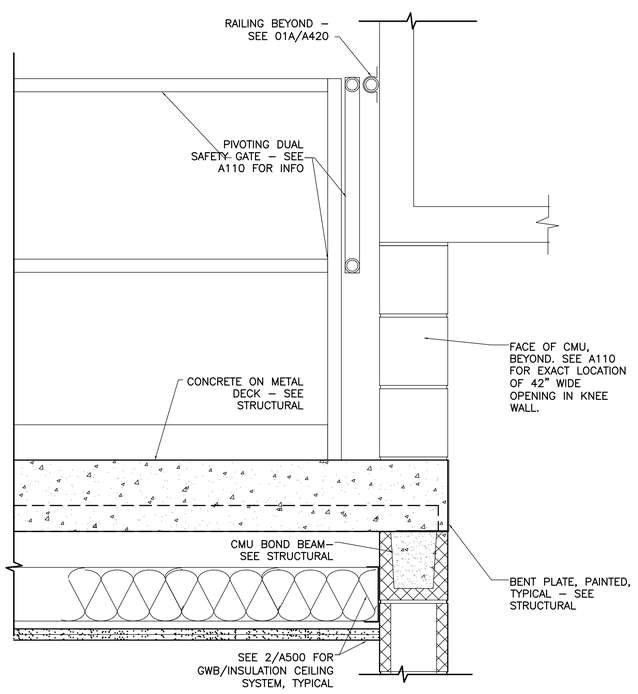

1B KNEE WALL OPENING & SAFETY GATE
SCALE: 1 1/2" = 1'-0"

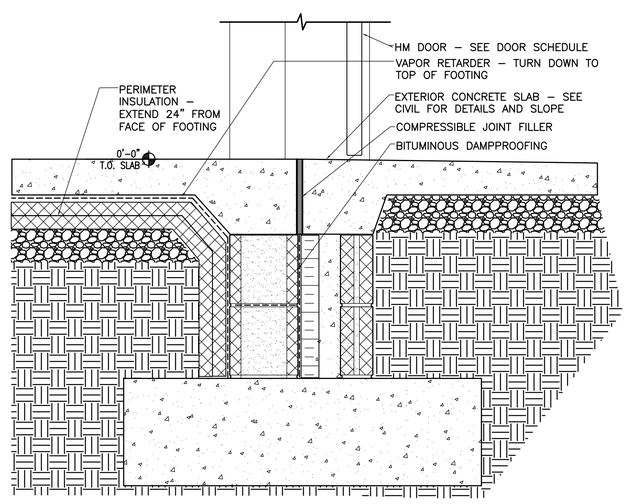

2 TYPICAL SECTION AT BOTTOM OF EXTERIOR DOOR
SCALE: 1 1/2" = 1'-0"

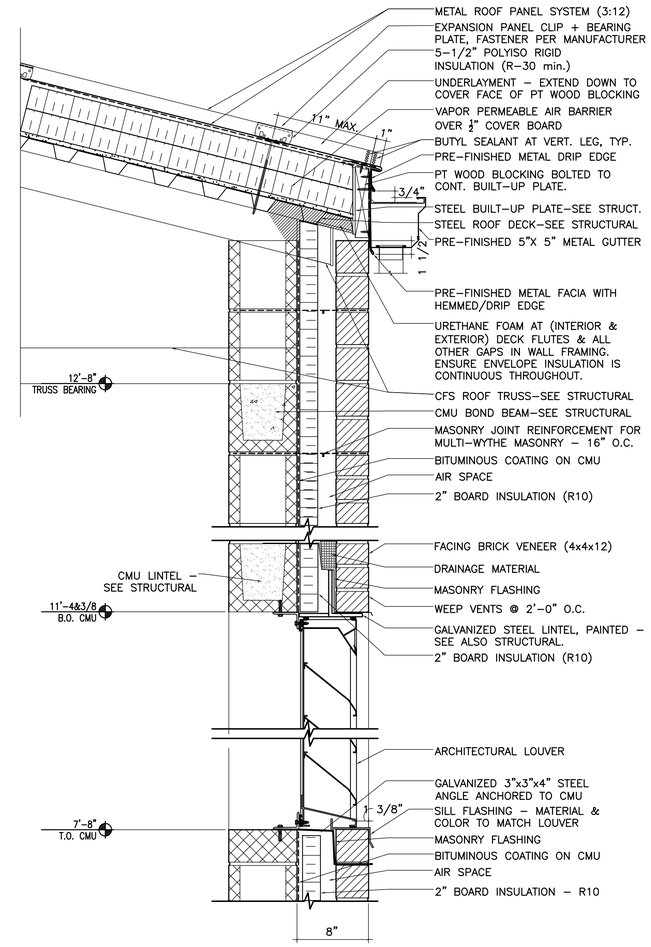

3 WALL SECTION AT TYPICAL EAVE AND AT LOUVER
SCALE: 1 1/2" = 1'-0"

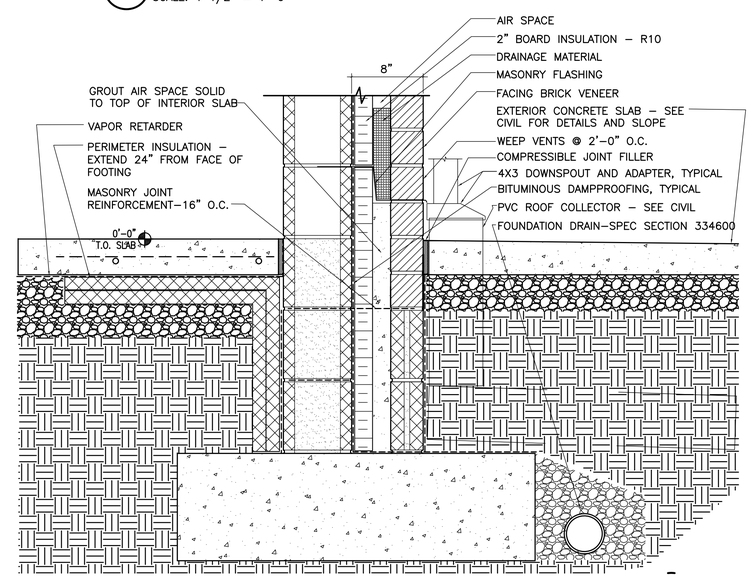

4 TYPICAL WALL SECTION
SCALE: 1 1/2" = 1'-0"

Wagner Architecture, pllc
92 ELAM COURT
NEW HILL, NORTH CAROLINA 27562
TEL. (919) 612.5050

Kramer Engineering Services, pllc
5517 Cascade Dr., Chapel Hill, NC 27514
TEL (919)933-3350
email: donna@kespllc.com
Firm license: P-1099

bennett&pless
formerly LHC STRUCTURAL ENGINEERS
5430 Wade Park Blvd, Suite 400
Raleigh, NC 27607
Tel 919 832 5587

Copyright 2022 ● Bennett & Pless, Inc.
All Rights Reserved

B&P Job Number 22.08.048

NV5
NV5 ENGINEERS AND CONSULTANTS, INC.
3300 REGENCY PARKWAY, STE 100
CARY, NC 27518
P: 919.851.1912 www.NV5.com
NC License # F-1333
formerly CALYX Engineers + Consultants

KIMBERLY ANN WAGNER REGISTERED ARCHITECT 10244 NORTH CAROLINA CARNER, NC
WAGNER ARCHITECTURE PLLC 51882 North Carolina Registered Architectural Firm CARNER, NC
5-18-23

PREPARED FOR
NORTH CAROLINA STATE UNIVERSITY
COLLEGE OF VETERINARY MEDICINE

TRUE NORTH
PLAN NORTH

TRANSLATIONAL RESEARCH FACILITY

revisions

building number

cadd file number

drawn by RFW

checked by KAW

date ISSUED FOR CONSTRUCTION-05/18/23

project number
NCSU CODE: 42124
ITEM: 305
WA 202207
SCO#: 21-24030-01A

WALL SECTIONS

sheet number: A420

revision number:

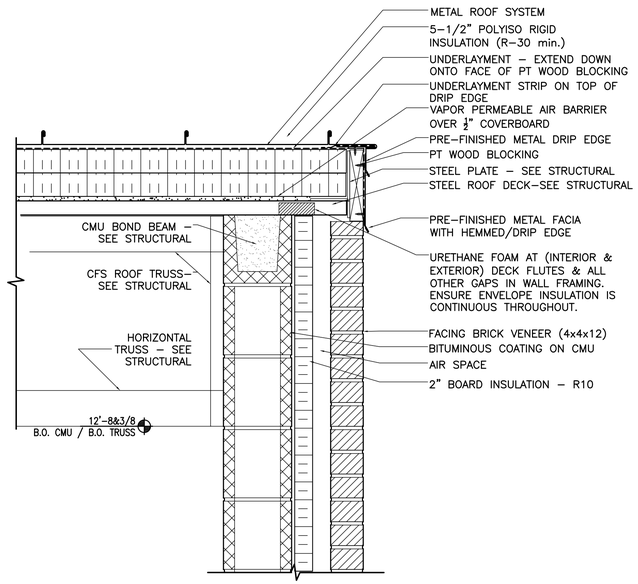

1 TYPICAL WALL SECTION
SCALE: 1 1/2" = 1'-0"

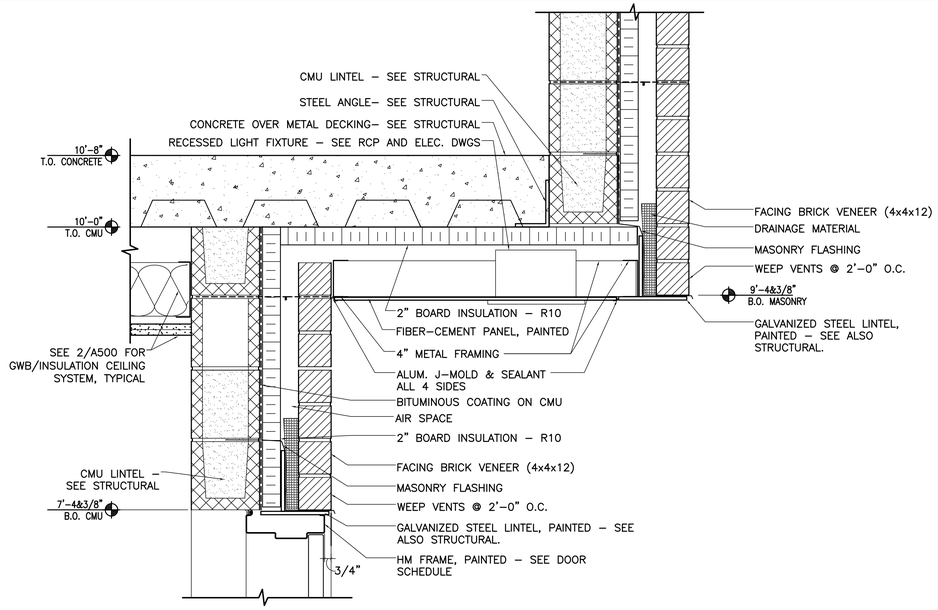

2 TYPICAL WALL SECTION A VESTIBULE
SCALE: 1 1/2" = 1'-0"

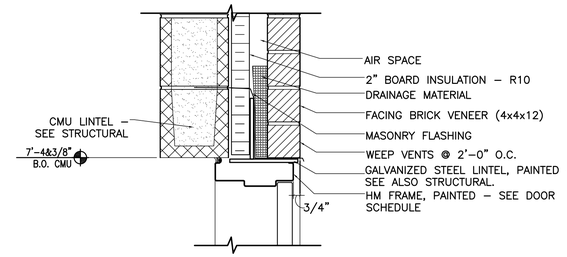

3A TYPICAL HEAD DETAIL AT EXT. DOOR
SCALE: 1 1/2" = 1'-0"

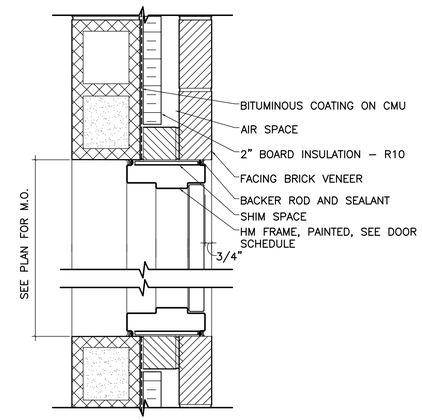

3B TYPICAL PLAN DETAIL AT EXT. DOOR
SCALE: 1 1/2" = 1'-0"

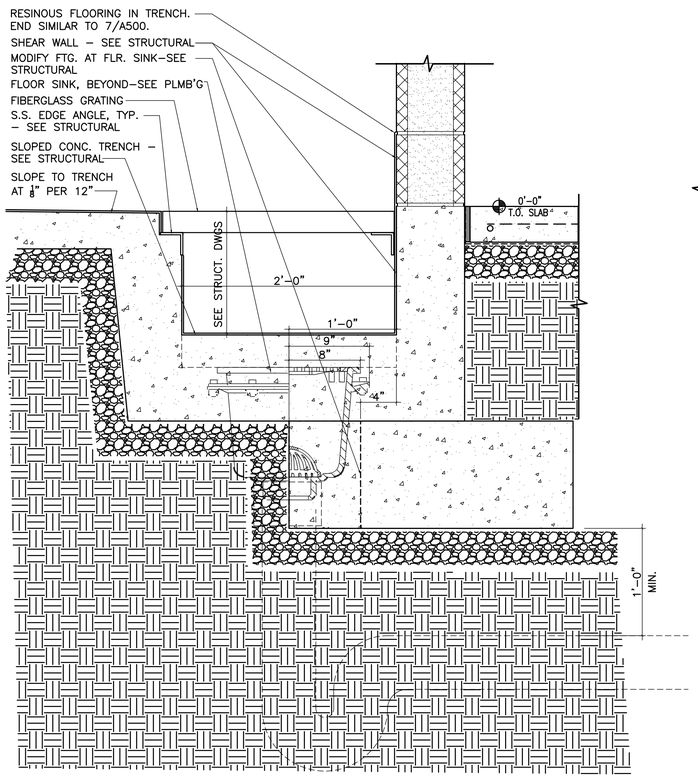

4 TYPICAL WALL SECTION AT TRENCH
SCALE: 1 1/2" = 1'-0"

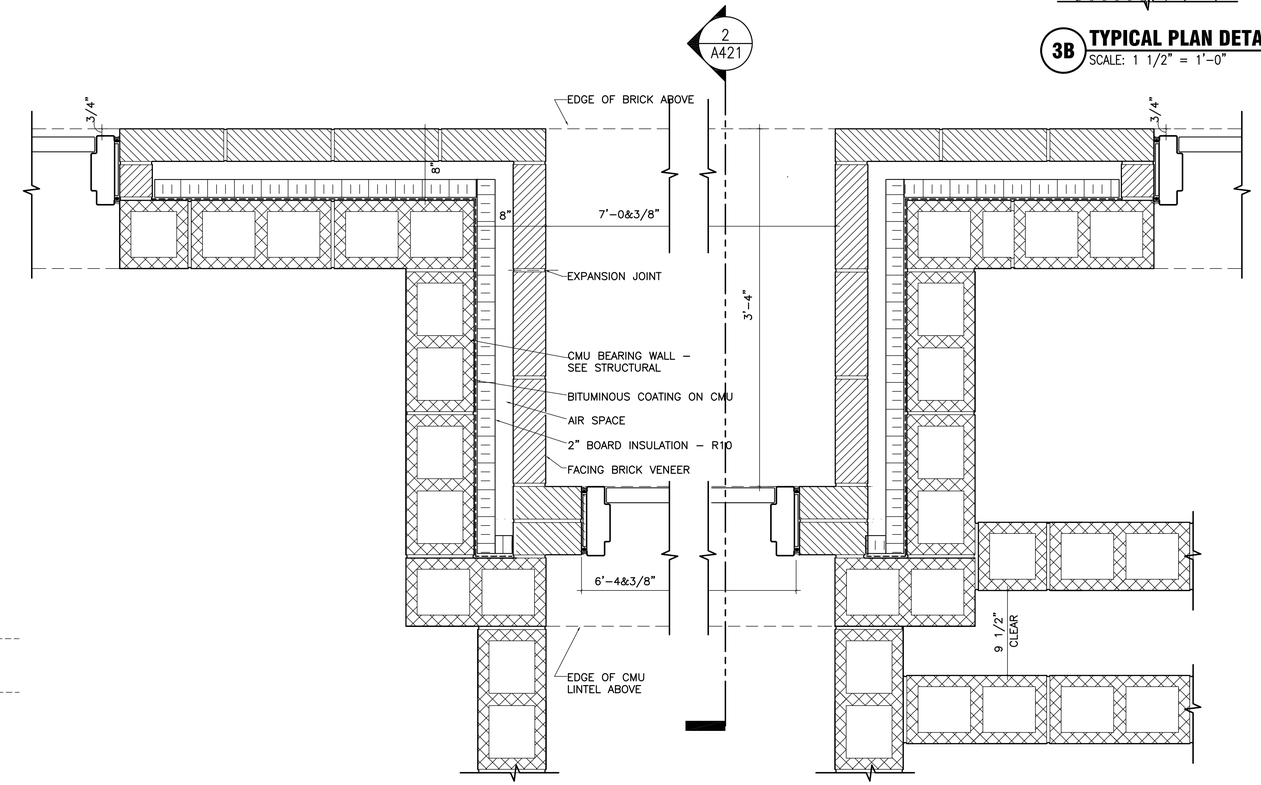

5 PLAN SECTION AT VESTIBULE
SCALE: 1 1/2" = 1'-0"

Wagner Architecture, pllc
92 ELAM COURT
NEW HILL, NORTH CAROLINA 27562
TEL. (919) 612.5050

Kramer Engineering Services, pllc
5517 Cascade Dr., Chapel Hill, NC 27514
TEL (919)933-3350
email: donna@kespllc.com
Firm license: P-1099

bennett&pless
formerly LHC STRUCTURAL ENGINEERS
5430 Wade Park Blvd, Suite 400
Raleigh, NC 27607
Tel 919 832 5587

Copyright 2022 • Bennett & Pless, Inc.
All Rights Reserved

B&P Job Number 22.08.048

NV5 ENGINEERS AND CONSULTANTS, INC.
3300 REGENCY PARKWAY, STE 100
CARY, NC 27518
P: 919.851.1912 www.NV5.com
NC License # F-1333
formerly CALYX Engineers + Consultants

KIMBERLY ANN WAGNER REGISTERED ARCHITECT 10244 NORTH CAROLINA CARNER, NC
WAGNER ARCHITECTURE PLLC Registered Architecture Firm 51882 North Carolina CARNER, NC
5-18-23

PREPARED FOR
NORTH CAROLINA STATE UNIVERSITY
COLLEGE OF VETERINARY MEDICINE

TRUE NORTH
PLAN NORTH

TRANSLATIONAL RESEARCH FACILITY

revisions

building number

cadd file number

drawn by RFW

checked by KAW

date ISSUED FOR CONSTRUCTION–05/18/23

project number
NCSU CODE: 42124
ITEM: 305
WA 202207
SCO#: 21–24030–01A

WALL SECTIONS

sheet number A421

revision number

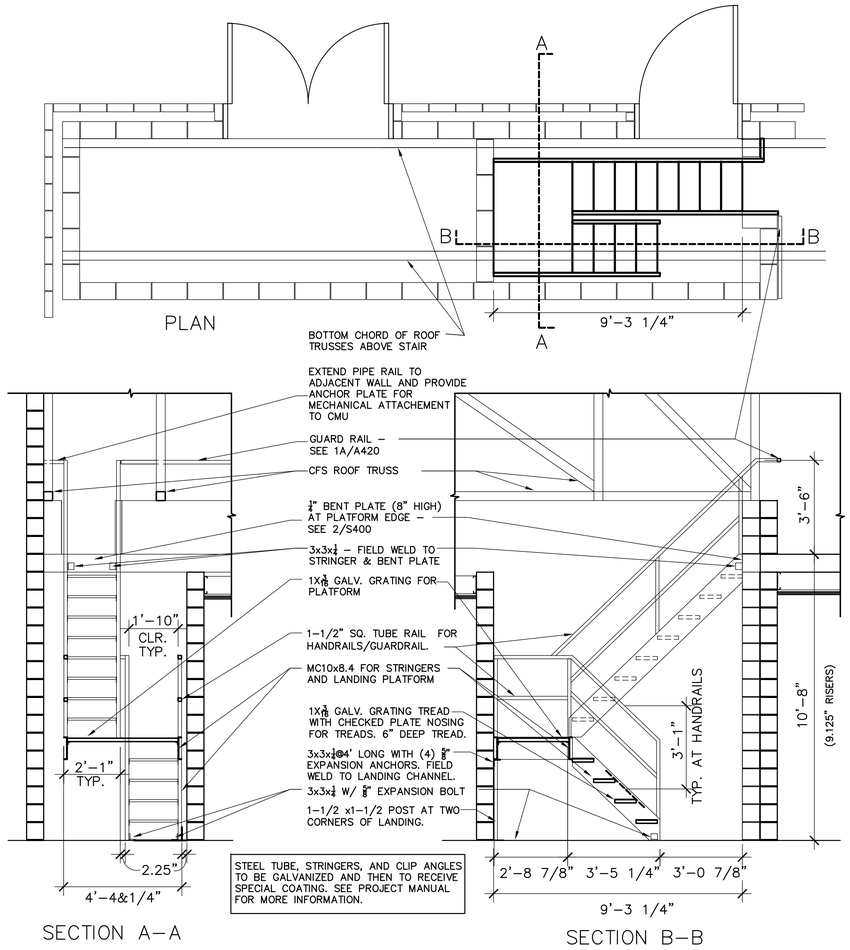

STEEL TUBE, STRINGERS, AND CLIP ANGLES TO BE GALVANIZED AND THEN TO RECEIVE SPECIAL COATING. SEE PROJECT MANUAL FOR MORE INFORMATION.

1 STEEL STAIR
SCALE: 3/8" = 1'-0"

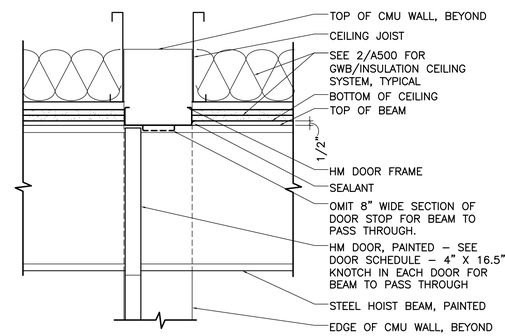

2 DOOR HEAD DETAIL AT HOIST BEAM
SCALE: 1 1/2" = 1'-0"

FLASHING LAP NOTE
LAP RIDGE/HIP 4" MIN W/ 2 ROWS OF BUTYL SEALANT.
DO NOT POP RIVET LAPPED FLASHINGS.

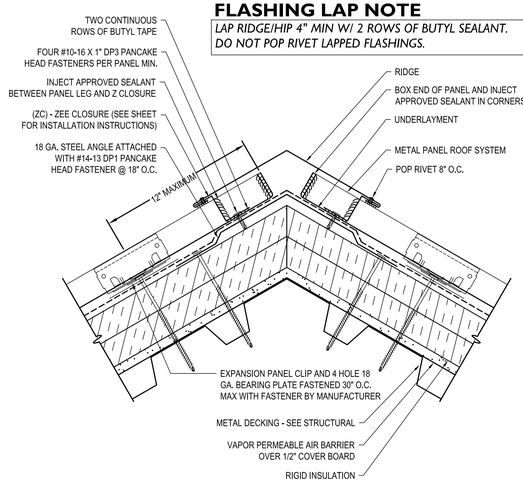

3 ROOF PEAK DETAIL
SCALE: N.T.S.

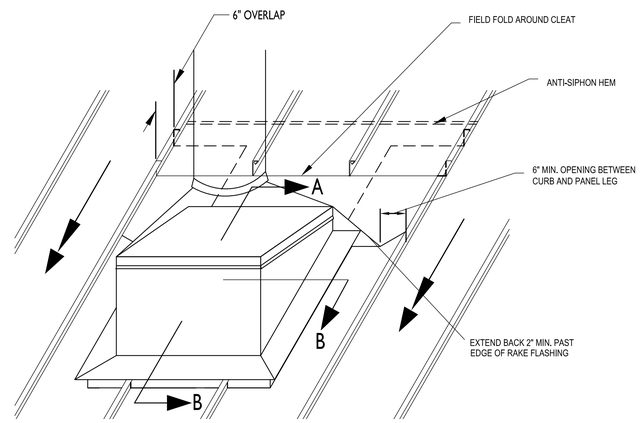

CURB DETAIL INSTRUCTIONS
4'-0" WIDTH OR LESS

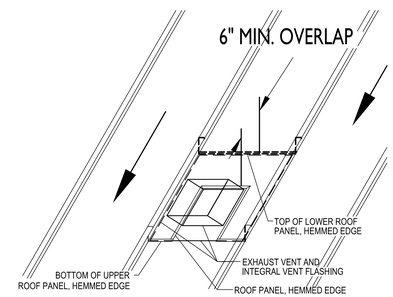

EXHAUST VENT -
LOCATE WITHIN SINGLE PANEL

6 EXHAUST VENT DETAIL
SCALE: N.T.S.

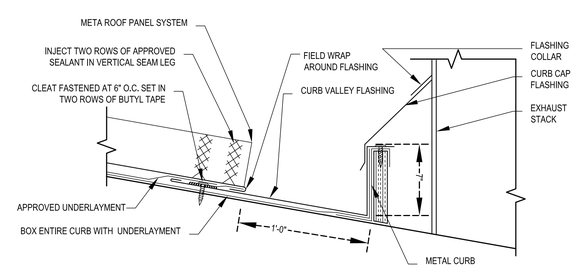

SECTION "A"

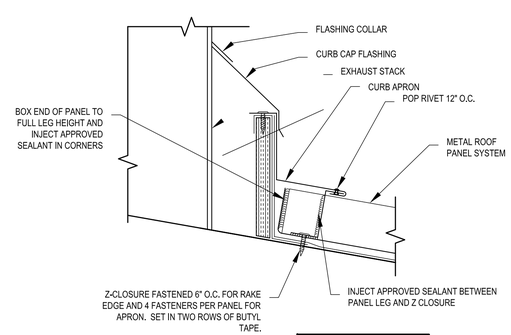

SECTION "B"

Step 1: Seam Panel
Step 2: Notch z–closure.
Step 3: Apply two rows of butyl tape to underside of z–closure.
Step 4: Install z–closure.
Step 5: Seal all contact points of z–closure and panel legs. Also seal over top of panel leg.

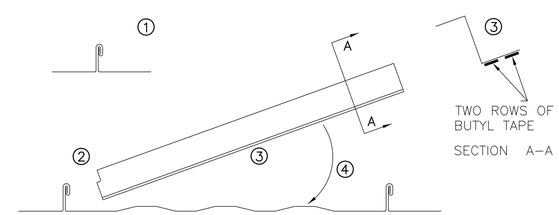

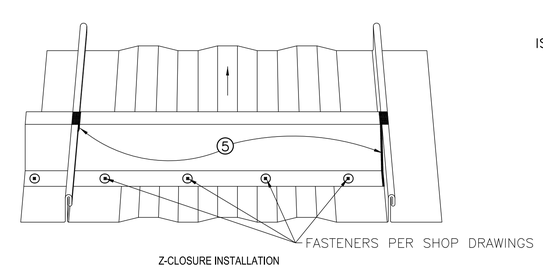

Z-CLOSURE INSTALLATION

5 ROOF CURB DETAILS
SCALE: N.T.S.

NOTE
DO NOT ATTACH INTO SOLID SUBSTRATE BELOW.
BOOT SHALL NOT INTERSECT STANDING SEAM VERTICAL LEG.
INSTALL IN FLAT AREA OF PANEL ONLY.
IF USING A SQUARE BOOT DETAIL BE SURE TO SET BOOT IN A DIAGONAL OR DIAMOND TO ALLOW WATER FLOW.

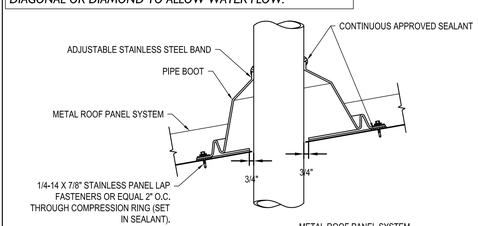

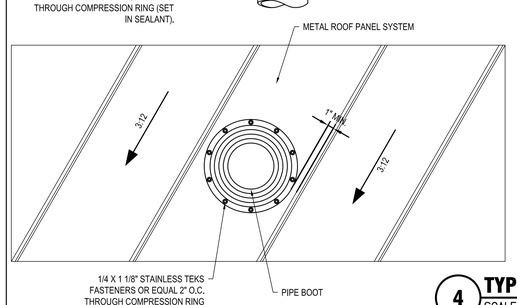

4 TYPICAL VENT THRU ROOF DETAIL
SCALE: N.T.S.

Wagner Architecture, pllc
92 ELAM COURT
NEW HILL, NORTH CAROLINA 27562
TEL. (919) 612.5050

Kramer Engineering Services, pllc
5517 Cascade Dr., Chapel Hill, NC 27514
TEL (919)933-3350
email: donna@kespllc.com
Firm license: P-1099

bennett&pless
formerly LHC STRUCTURAL ENGINEERS
5430 Wade Park Blvd, Suite 400
Raleigh, NC 27607
Tel 919 832 5587

Copyright 2022 ● Bennett & Pless, Inc.
All Rights Reserved

B&P Job Number 22.08.048

NV5
NV5 ENGINEERS AND CONSULTANTS, INC.
3300 REGENCY PARKWAY, STE 100
CARY, NC 27518
P: 919.851.1912 www.NV5.com
NC License # F-1333
formerly CALYX Engineers + Consultants

KIMBERLY ANN WAGNER REGISTERED ARCHITECT 10244 NORTH CAROLINA GARNER, NC
WAGNER ARCHITECTURE PLLC 51882 North Carolina Registered Architectural Firm GARNER, NC
5-18-23

PREPARED FOR
NORTH CAROLINA STATE UNIVERSITY
COLLEGE OF VETERINARY MEDICINE

TRUE NORTH
PLAN NORTH

TRANSLATIONAL RESEARCH FACILITY

revisions

building number

cadd file number

drawn by: RFW

checked by: KAW

date: ISSUED FOR CONSTRUCTION–05/18/23

project number: NCSU CODE: 42124
ITEM: 305
WA 202207
SCO#: 21–24030–01A

DETAILS

sheet number: A422

revision number:

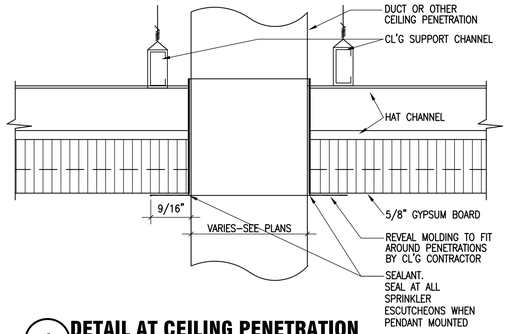

1 DETAIL AT CEILING PENETRATION
NOT TO SCALE

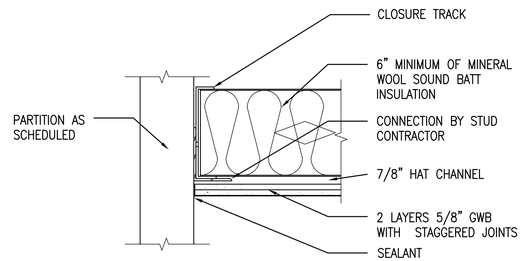

2 FRAMED GWB CEILING SYSTEM
SCALE: 1 1/2" = 1'–0"

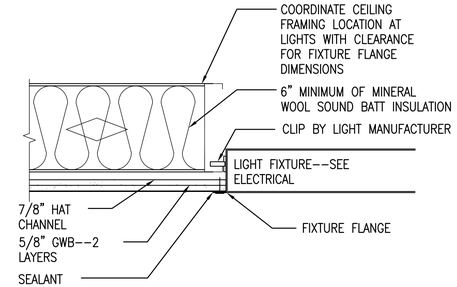

3 CEILING FRAMING AT FIXTURES
SCALE: 1 1/2" = 1'–0"

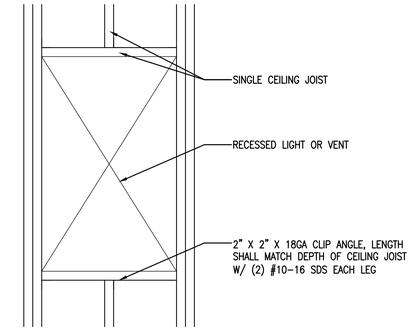

4 FRAMING AT RECESSED LIGHT OR VENT
SCALE: 3/4" = 1'–0"

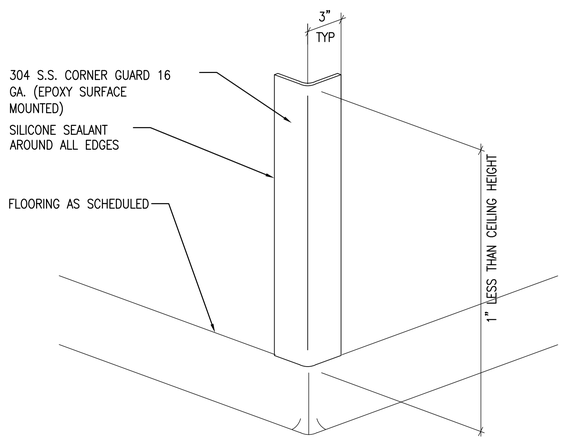

5 CORNER GUARD DETAIL (CG)
NOT TO SCALE

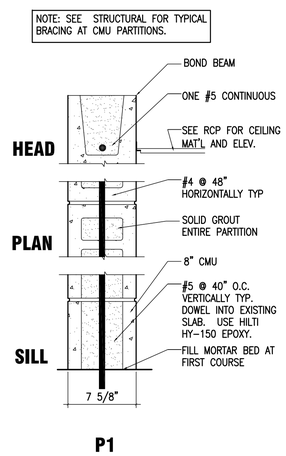

6 PARTITION DETAIL (P-1)
SCALE: 1 1/2" = 1'–0"

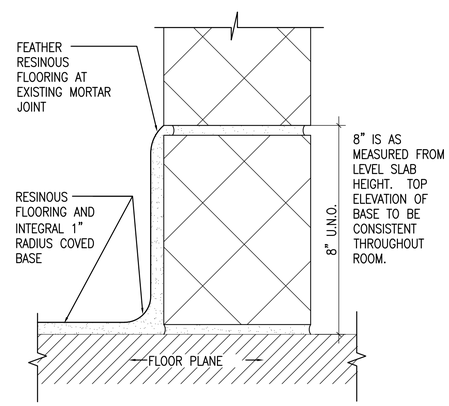

7 WALL BASE @ RESINOUS FLOOR W/ CMU WALL
NOT TO SCALE

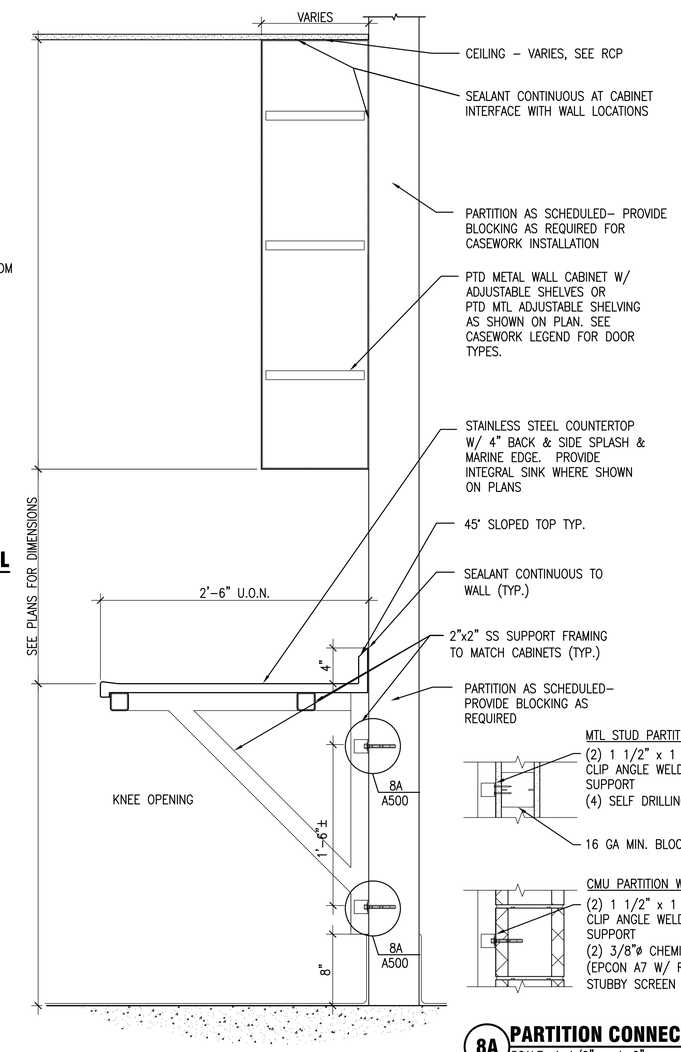

8 WALL MOUNTED COUNTERTOP
SCALE: 1 1/2" = 1'–0"

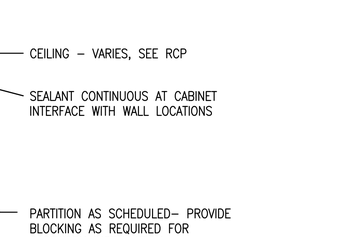

8A PARTITION CONNECTION
SCALE: 1 1/2" = 1–0"

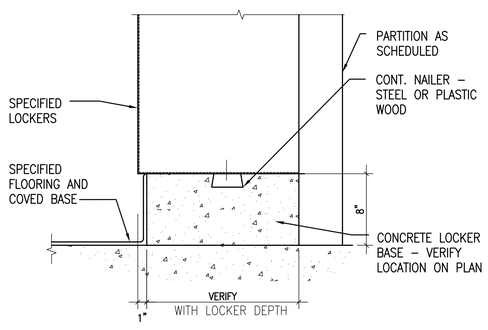

9 LOCKER BASE DETAIL
SCALE: 1 1/2" = 1'–0"

Wagner Architecture, pllc
92 ELAM COURT
NEW HILL, NORTH CAROLINA 27562
TEL. (919) 612.5050

Kramer Engineering Services, pllc
5517 Cascade Dr., Chapel Hill, NC 27514
TEL (919)933-3350
email: donna@kespllc.com
Firm license: P-1099

bennett&pless
formerly LHC STRUCTURAL ENGINEERS
5430 Wade Park Blvd, Suite 400
Raleigh, NC 27607
Tel 919 832 5587

Copyright 2022 ● Bennett & Pless, Inc.
All Rights Reserved

B&P Job Number 22.08.048

NV5
NV5 ENGINEERS AND CONSULTANTS, INC.
3300 REGENCY PARKWAY, STE 100
CARY, NC 27518
P: 919.851.1912 www.NV5.com
NC License # F-1333
formerly CALYX Engineers + Consultants

KIMBERLY ANN WAGNER REGISTERED ARCHITECT 10244 NORTH CAROLINA CARNER, NC
WAGNER ARCHITECTURE PLLC Registered Architecture Firm 51882 North Carolina CARNER, NC
5-18-23

PREPARED FOR
NORTH CAROLINA STATE UNIVERSITY
COLLEGE OF VETERINARY MEDICINE

TRUE NORTH
PLAN NORTH

TRANSLATIONAL RESEARCH FACILITY

revisions

building number

cadd file number

drawn by RFW

checked by KAW

date ISSUED FOR CONSTRUCTION–05/18/23

project number NCSU CODE: 42124
ITEM: 305
WA 202207
SCO#: 21–24030–01A

PARTITION TYPES AND CEILING DETAILS

sheet number A500

revision number

PIPING AND PLUMBING SYMBOLS

1/2"	1/2" COLD WATER
1/2"	1/2" HOT WATER
1/2"	1/2" HOT WATER RECIRC
2" HWR	HEATING HOT WATER RETURN WITH FLOW DIRECTION AND PIPE SIZE INDICATED
2" HWS	HEATING HOT WATER SUPPLY WITH FLOW DIRECTION AND PIPE SIZE INDICATED
1/2" DI	1/2" DE-IONIZED WATER
1/2" NP	1/2" NON-POTABLE WATER
1/2" ADW	ANIMAL DRINKING WATER
3/4" HPCW	HIGH PRESSURE COLD WATER WITH MAIN TAKE-OFF UPSTREAM OF BUILDING PRESSURE REGULATOR.
1/2" O2	1/2" MEDICAL GAS OXYGEN
3/4" VAC	3/4" MEDICAL VACUUM
3/4" WAGD	3/4" WAGD VACUUM
4"	4" SANITARY WASTE
4" AW	4" ACID-RESISTANT ANIMAL WASTE
2"	2" VENT
2" AV	2" ACID-RESISTANT ANIMAL VENT
RW	RAINWATER/STORM DRAIN
RWO	RAINWATER/STORM DRAIN OVERFLOW
RO	REVERSE OSMOSIS WATER PIPING
D	INDIRECT DRAIN PIPING
HPS	HIGH PRESSURE STEAM PIPING
HPR	HIGH PRESSURE CONDENSATE PIPING
LPS	LOW PRESSURE STEAM PIPING
LPR	LOW PRESSURE GRAVITY STEAM RETURN
CHWS	CHILLED WATER SUPPLY
CHWR	CHILLED WATER RETURN
PCR	PUMPED CONDENSATE RETURN
	CONCENTRIC PIPE REDUCER
	ECCENTRIC PIPE REDUCER
	BALL VALVE
	GATE VALVE
	REGULATING VALVE
	CHECK VALVE
	BUTTERFLY VALVE
	MOTOR OPERATED VALVE
	GLOBE VALVE
	F&T STEAM TRAP ASSEMBLY
	PIPE DOWN
	PIPE UP
	CONCENTRIC PIPE REDUCER
FS	FLOOR SINK
FD	FLOOR DRAIN
RD	ROOF DRAIN
FCO	FLOOR CLEANOUT (FCO)
	LINE CLEANOUT (CO), BASE CLEANOUT (BCO), WALL CLEANOUT (WCO)
	STRAINER
	UNION OR FLANGE
HB	HOSE BIB
WH	WALL HYDRANT (OR FREEZE-PROOF WALL HYDRANT, FPWH)
	WATER FILTER WITH INTEGRAL FLUSH VALVE

MV	MIXING VALVE
TMV	THERMOSTATIC MIXING VALVE
PT	TEMPERATURE AND PRESSURE RELIEF VALVE
P	PRESSURE RELIEF VALVE
VB	VACUUM BREAKER
	THERMOMETER
	PRESSURE GAUGE
B	WATER HAMMER ARRESTOR, PDI SIZE 'B'
	PUMP, SCHEMATIC SYMBOL
	BACKFLOW PREVENTER, RPZ-TYPE UNO
	AIR VENT
TP	TRAP PRIMER
FM	FLOW METER
M	WATER METER
HD	HUB DRAIN WITH P-TRAP
F	FLOW SWITCH

GENERAL SYMBOLS

	CONNECT TO EXISTING
	POINT OF CONNECTION BETWEEN EXISTING TO BE REMOVED AND EXISTING TO REMAIN
1 / P101	PLAN OR DETAIL NUMBER / DRAWING NUMBER
1 / P110	SECTION NUMBER / SHOWN ON DRAWING NUMBER
3	KEYED NOTE NUMBER
1	REVISION NUMBER
	1-HOUR FIRE BARRIER
	2-HOUR FIRE BARRIER
	PIPING OR EQUIPMENT TO BE DEMOLISHED
X-FS	PIPING OR EQUIPMENT SHOWN WITH A SCREENED LINETYPE OR DESIGNATED WITH AN 'X-' IS EXISTING
12x12 / 4" X	DASHED OR FADED LINE TYPE ON PIPING, DUCTWORK AND EQUIPMENT INDICATES EXISTING, TYPICAL
	BREAK LINE
OR	PIPE BREAK
1	REVISION CLOUD

CEILING MOUNTED DEVICES (BY OTHERS)

	WIRELESS OUTLET
DS	OCCUPANCY SENSOR
S	SMOKE DETECTOR
	HEPA FILTER SUPPLY BOX
	LIGHT FIXTURES
	CEILING ACCESS PANEL
C	SECURITY CAMERA
T	TELEMETRY DEVICE
	SUPPLY DIFFUSER
	EXHAUST GRILLE
	EMERGENCY LIGHT

PLUMBING ABBREVIATIONS

℄	CENTER LINE
∠	ANGLE
ø	ROUND, DIAMETER OR
PHASE	
#	POUNDS OR NUMBER
A	COMPRESSED AIR
ABB	ABBREVIATION
ABV	ABOVE
ABV CLG	ABOVE CEILING
ACCU	AIR COOLED CONDENSING UNIT
ACFM	AIR CHANGES PER HOUR
ACU	AIR CONDITIONING UNIT
AC/HR	AIR CHANGES PER HOUR
AD	ACCESS DOOR OR ARE
DRAIN	
ADC	AIR DIFFUSION COUNCIL
AFF	ABOVE FINISHED FLOOR
AFG	ABOVE FINISHED GRADE
AHU	AIR HANDLING UNIT
ALUM	ALUMINUM
ALT	ALTERNATE
AMCA	AIR MOVEMENT AND CONTROL ASSOCIATION
ANSI	AMERICAN NATIONAL STANDARD ASSOCIATION
AP	ACCESS PANEL
APPROX	APPROXIMATE
ARF	ABOVE RAISED FLOOR
ARCH	ARCHITECT/ARCHITECTURAL
ASHRAE	AMERICAN SOCIETY OF HEATING REFIGERATING AND AIR CONDITIONING ENGINEERS
ASME	AMERICAN SOCIETY OF MECHANICAL ENGINEERS
AUTO	AUTOMATIC
AV	ACID VENT
AW	ACID WASTE
AWWA	AMERICAN WATER WORKS ASSOCIATION
BBD	BOILER BLOWDOWN
BEL	BELOW
BF	BELOW FLOOR
BFP	BACKFLOW PREVENTER
BFW	BOILER FEED WATER
BHP	BRAKE HORSEPOWER
BLR	BOILER
BM	BEAM
BOD	BOTTOM OF DUCT
BOP	BOTTOM OF PIPE
BOT	BOTTOM
BTU	BRITISH THERMAL UNIT
BTUM	BRITISH THERMAL UNIT PER HOUR
CAP	CAPACITY
C	CELSIUS
CD	CONDENSATE DRAIN OR CEILING DIFFUSER
CF	CHEMICAL FEED
CFH	CUBIC FEET PER HOUR
CFM	CUBIT FEET PER MINUTE
CHWP	CHILLED WATER PUMP
CHWR	CHILLED WATER RETURN
CHWS	CHILLED WATER SUPPLY
CI	CAST IRON
CLE	CENTERLINE ELEVATION
CLG	CEILING
CO	CLEAN OUT
COL	COLUMN
CONC	CONCRETE
CONN	CONNECT/CONNECTION
CONST	CONSTRUCTION
CONTR	CONTRACTOR
COORD	COORDINATE
COP	COEFFICIENT OF PERFORMANCE
CT	COOLING TOWER
CTE	CONNECT TO EXISTING (AT THIS POINT)
CTR	CENTER
CU	COPPER
CU FT	CUBIC FOOT
CW	COLD WATER OR CITY WATER
CDWP	CONDENSER WATER PUMP
CDWR	CONDENSER WATER RETURN
CDWS	CONDENSER WATER SUPPLY
CU YD	CUBIC YARD
DAP	DUCT ACCESS PANEL
DB	DRY BULB
DG	DOOR GRILLE
DH	DUCT HEATER
DI	DUCTILE IRON DIA DIAMETER
DIA	DIAMETER
DN	DOWN
DD	DUCT MOUNTED SMOKE DETECTOR
DP	DIFFERENTIAL PRESSURE
DPR	DAMPER
DW	DISHWASHER
DWG	DRAWING
DX	DIRECT EXPANSION
EA	EACH, EXHAUST AIR
EAT	ENTERING AIR TEMPERATURE
EF	EXHAUST FAN
EFF	EFFICIENCY
EH	ELECTRONIC HEATER
EJ	EXPANSION JOINT
EL	ELEVATION
ELEC	ELECTRICAL
EQUIP	EQUIPMENT
ESP	EXTERNAL STATIC PRESSURE
EWC	ELECTRIC WATER COOLER
EWT	ENTERING WATER TEMPERATURE
EXH	EXHAUST
EXIST	EXISTING
F	FAHRENHEIT
FD	FIRE DAMPER, FLOOR DRAIN
FCU	FAN COIL UNIT
FF	FINISHED FLOOR
FFE	FINISHED FLOOR ELEVATION
FL, FLR	FLOOR
FLEX	FLEXIBLE
FOB	FLAT ON BOTTOM
FOR	FUEL OIL RETURN
FOS	FUEL OIL SUPPLY
FOT	FLAT ON TOP
FOV	FUEL OIL VENT
FPM	FEET PER MINUTE
FPS	FEET PER SECOND
FS	FLOOR SINK
FT	FOOT
FTG	FOOTING
FURN	FURNISH
FWG	FEET WATER GAUGE
G	NATURAL GAS
GA	GAGE
GAL	GALLONS
GALV	GALVANIZED
GC	GENERAL CONTRACTOR
GPH	GALLONS PER HOUR
GPM	GALLONS PER MINUTE
GR	GRADE
GWI	GALVANIZED WROUGHT IRON
HC	ACCESSIBLE
HD	HUB DRAIN OR HEAT DETECTOR
HGR	HANGER
HOA	HAND-OFF-AUTOMATIC
HORZ	HORIZONTAL
HP	HIGH PRESSURE OR HORSEPOWER
HPR	HIGH PRESSURE CONDENSATE RETURN
HPS	HIGH PRESSURE STEAM
H'STAT	HUMIDISTAT
HT	HEIGHT
HTG	HEATING
HVAC	HEATING, VENTILATING & AIR CONDITIONING
HWR	HEATING WATER RETURN
HWS	HEATING WATER SUPPLY
ID	INSIDE DIAMETER
IE	INVERT ELEVATION
IM	ICE MACHINE/ICE MAKER
IN	INCH
INV	INVERT
JST	JOIST
KIT	KITCHEN
KW	KILOWATT
KWH	KILOWATT HOUR
LAB	LABORATORY
LAT	LEAVING AIR TEMPERATURE
LAV	LAVATORY
LB/HR	POUNDS PER HOUR
LCD	LINEAR CEILING DIFFUSER
LP	LOW PRESSURE
LPR	LOW PRESSURE CONDENSATE RETURN
LPS	LOW PRESSURE STEAM
LWT	LEAVING WATER TEMPERATURE
M	MAIN AIR SUPPLY
MAX	MAXIMUM
MBH	BTUH X 1000
MECH	MECHANICAL
MEZZ	MEZZANINE
MFG	MANUFACTURING
MFR	MANUFACTURER
MH	MANHOLE
MIN	MINIMUM
MOD	MOTOR OPERATED DAMPER
MTD	MOUNTED
MVD	MANUAL VOLUME DAMPER
N	NITROGEN
NC	NORMALLY CLOSED
NEC	NATION ELECTRIC CODE
NEMA	NATIONAL ELECTRICAL MANUFACTURERS ASSOCIATION
NFPA	NATIONAL FIRE PROTECTION ASSOCIATION
NIC	NOT IN CONTRACT
NO	NORMALLY OPEN, NITROUS OXIDE, NUMBER
NOM	NOMINAL
NPSH	NET POSITIVE SUCTION HEAD
NRS	NON RISING STEM
NTS	NOT TO SCALE
O	OXYGEN
OA	OUTSIDE AIR
OBD	OPPOSED BLADE DAMPER
OC	ON CENTER
OD	OUTSIDE DAMPER
OFCI	OWNER FURNISHED, CONTRACTOR INSTALLED
OFOI	OWNER FURNISHED, OWNER INSTALLED
OPP	OPPOSITE
OSAY	OUTSIDE SCREW AND YOKE
P	PUMP
PBD	PARALLEL BLADE DAMPER
PDI	PLUMBING AND DRAINAGE INSTITUTE
PR	PUMPED CONDENSATE RETURN
PCHWP	PRIMARY CHILLED WATER PUMP
PD	PRESSURE DROP
PPH	POUNDS PER HOUR
PRV	PRESSURE REDUCING VALVE
PSI	POUNDS PER SQUARE INCH
PSIA	POUNDS PER SQUARE INCH ABSOLUTE
PSIG	POUNDS PER SQUARE INCH GAUGE
P SLV	PIPE SLEEVE
PT	POINT
PVC	POLYVINYL CHLORIDE
QTY	QUALITY
RA	RETURN AIR
RCU	REFRIGERANT CONDENSING UNIT
RD	ROUND, ROOF DRAIN
RECIRC	RECIRCULATING
RED	REDUCER
REINF	REINFORCING
REL	RELOCATE
REM	REMOVE
REQ'D	REQUIRED
RET	RETURN
REV	REVISION
RF	RETURN FAN
RH	RELATIVE HUMIDITY
RL	RAIN LEADER OR REFRIGERANT LIQUID
RM	ROOM
RPM	REVOLUTIONS PER MINUTE
RS	RISING STEAM OR REFRIGERANT SUCTION
SA	SUPPLY AIR
SCH	SCHEDULE
SCHWP	SECONDARY CHILLED WATER PUMP
SCFM	STANDARD CUBIC FEET PER MINUTE
SD	SMOKE DAMPER OR STORM DRAIN
SECT	SECTION
SF	SUPPLY FAN
SH	SHOWER
SHT	SHEET
SK	SERVICE SINK
SM	SHEET METAL
SMACHNA	SHEET METAL AND AIR CONDITIONING CONTRACTORS NATIONAL ASSOCIATION
SP	STATIC PRESSURE OF SURGE PROTECTED
SPEC	SPECIFICATION
SQ	SQUARE
SRV	SAFETY RELIEF VALVE
SS	SERVICE SINK, STATINLESS STEEL OR SANITARY SEWER
STA	STATION
STM	STEAM
SYM	SYMBOL OR SYMMETRICAL
SYS	SYSTEM
TEMP	TEMPERATURE
T & B	TOP AND BOTTOM
TAB	TEST AND BALANCE
TD	TRENCH DRAIN
TOC	TOP OF CURB
TOD	TOP OF DUCT
TOP	TOP OF PIPE
TOS	TOP OF STEEL
TP	TRAP PRIMER
TR	THROUGH ROOF
TS	TIGHT TO STRUCTURE
TSTAT	THERMOSTAT
TYP	TYPICAL
UC	UNDERCOUNTER
UF	UNDER FLOOR
UG	UNDERGROUND
UL	UNDERWRITERS LABORATORIES
UN	UNIT HEATER
UR	URINAL
V	VENT
VAC	VACUUM (SUCTION)
VERT	VERTICAL
VB	VACUUM BREAKER
VLV	VALVE
VOL	VOLUME
VTR	VENT THROUGH ROOF
W/	WITH
W/O	WITHOUT
WB	WET BULB
WC	WATER CLOSET
WG	WATER GAUGE
WP	WEATHERPROOF
WSV	WATER STACK VENT

COORDINATION NOTES:

1. PLUMBING CONTRACTOR SHALL COORDINATE INSTALLATION OF VALVES, BACKFLOW PREVENTERS, WATER HEATER, ETC. SUCH THAT THE WORK OF OTHER TRADES DOES NOT INTERFERE WITH REQUIRED/RECOMMENDED MAINTENANCE ACCESS OF PLUMBING EQUIPMENT.

2. DO NOT ROUTE PIPING DIRECTLY ABOVE ELECTRICAL PANELS, MOTOR DISCONNECTS, STARTERS OR VARIABLE SPEED DRIVES.

PLUMBING SHEET INDEX

DRAWING	DESCRIPTION
P001	PLUMBING LEGEND
P101	WASTE AND VENT PIPING PLAN
P201	WATER AND MEDICAL GAS PIPING PLAN
P202	EQUIPMENT PLATFORM - WATER AND MEDICAL GAS PIPING PLAN
P301	PLUMBING SCHEDULES
P401	PLUMBING DETAILS
P402	PLUMBING DETAILS

Wagner Architecture, pllc
92 ELAM COURT
NEW HILL, NORTH CAROLINA 27562
TEL. (919) 612.5050

Kramer Engineering Services, pllc
5517 Cascade Dr Chapel Hill, NC 27514
TEL (919)933-3350
email: donna@kespllc.com
Firm license: P-1099

bennett&pless
formerly LHC STRUCTURAL ENGINEERS

NV5
NV5 ENGINEERS AND CONSULTANTS, INC.
3300 REGENCY PARKWAY, STE 100
CARY, NC 27518
P: 919.851.1912 www.NV5.com
NC License # F-1333
formerly CALYX Engineers + Consultants

NORTH CAROLINA PROFESSIONAL SEAL 14917 ENGINEER DONNA D. KRAMER 2023

PREPARED FOR
NORTH CAROLINA STATE UNIVERSITY
COLLEGE OF VETERINARY MEDICINE

TRANSLATIONAL RESEARCH FACILITY

revisions

building number

cadd file number

drawn by EAP

checked by DDK

date ISSUED FOR CONSTRUCTION – 05/18/23

project number
NCSU CODE: 42124
ITEM: 305
WA 202207
SCO#: 21-24030-01A

PLUMBING LEGEND

sheet number: P001

revision number:

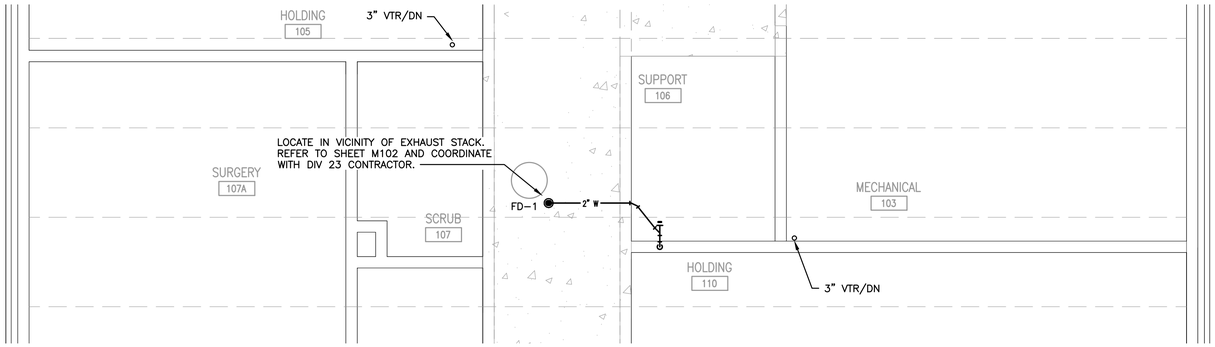

2 P101 PARTIAL EQUIPMENT PLATFORM PLAN – WASTE AND VENT PIPING
SCALE: 1/4" = 1'0"

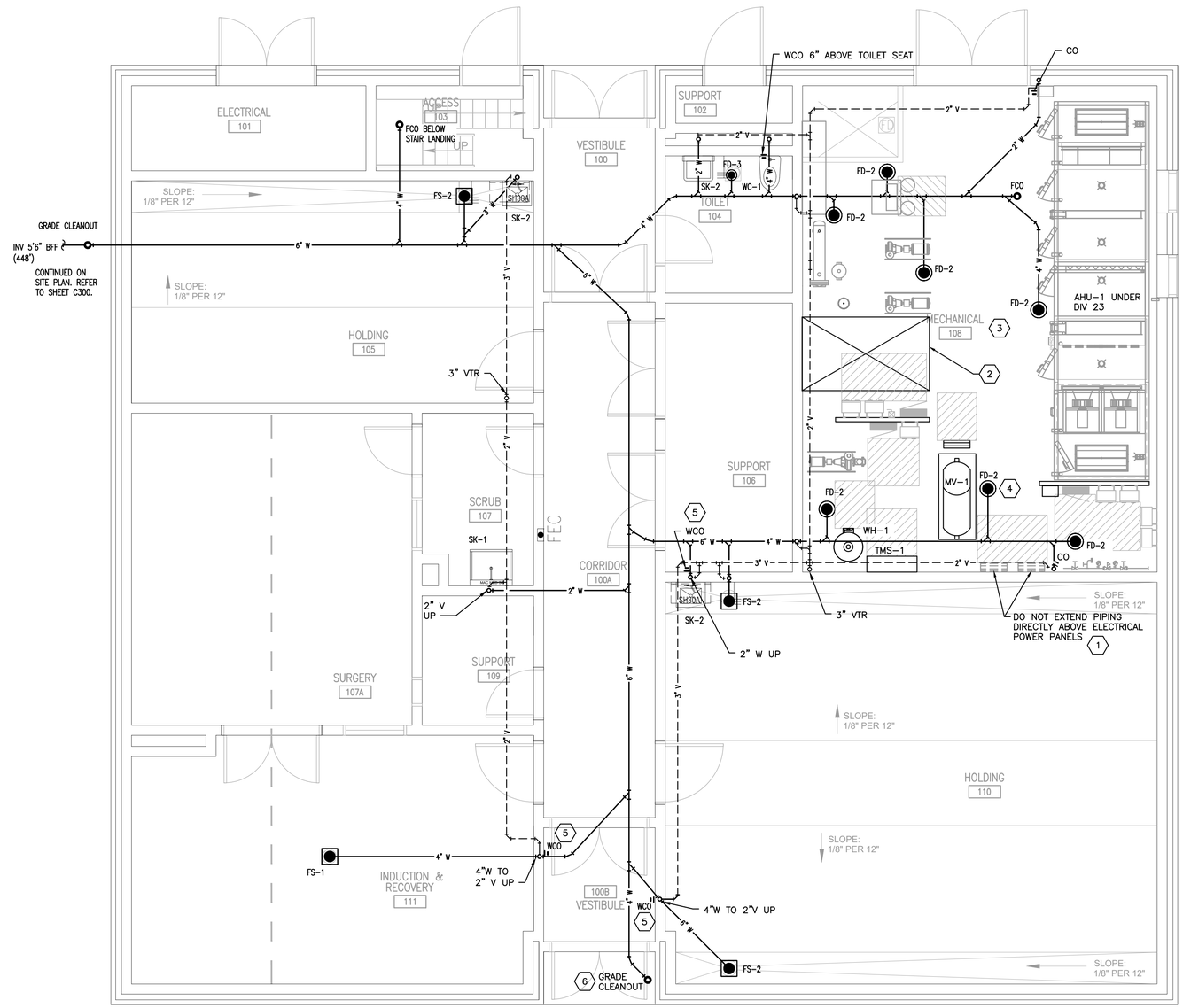

1 P101 FLOOR PLAN – WASTE AND VENT PIPING
SCALE: 1/4" = 1'0"

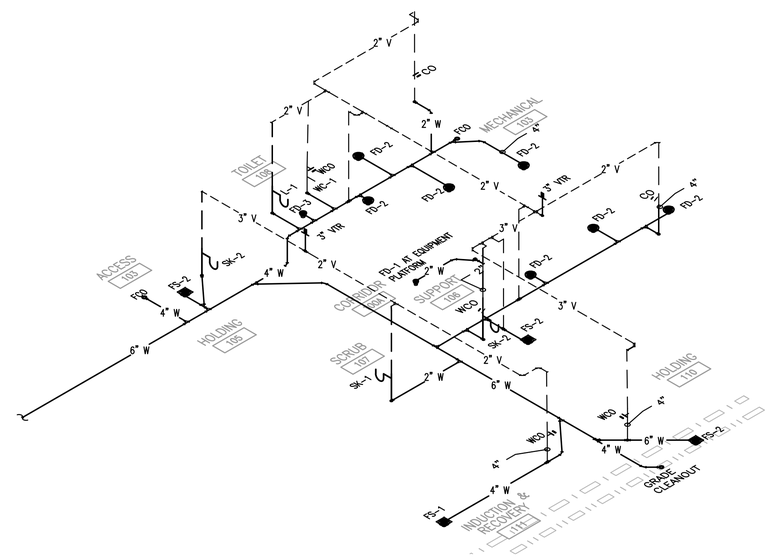

3 P101 WASTE AND VENT PIPING RISER
SCALE: NONE

SHEET KEYED NOTES

1. DO NOT INSTALL PIPING OR ANY DEVICES OR EQUIPMENT DIRECTLY ABOVE ELECTRICAL POWER PANELS. MAINTAIN A 30"WX36"DX6'6"H WORKING CLEARANCE IN FRONT OF ALL PANELS, VARIABLE SPEED DRIVES, CONTROL PANELS, DISCONNECTS, AND STARTERS.
2. MAINTAIN CLEAR AREA IN THIS VICINITY TO ALLOW FOR REMOVAL AND REPLACEMENT OF EQUIPMENT ON PLATFORM, ABOVE.
3. LOCATE DRAINS IN MECHANICAL ROOM SO THEY ARE NOT DIRECTLY ABOVE WALL FOOTINGS.
4. ADD ALTERNATE #9: ALL MEDICAL GAS PIPING AND EQUIPMENT SHALL BE PRICED AS AN ADD ALTERNATE. BASE BID SHALL INCLUDE THIS FLOOR DRAIN FOR FUTURE.
5. INSTALL STAINLESS STEEL CLEANOUT COVER.
6. SET GRADE CLEANOUT CLEAR OF ENTRYWAY TO THE EXTENT POSSIBLE.

SHEET GENERAL NOTES

1. WHERE PIPES PASS THROUGH FOUNDATION WALLS, INSTALL SCHEDULE 40 STEEL SLEEVE, TWO PIPE SIZES LARGER THAN PIPE. PIPE SHALL BE CENTERED IN SLEEVE AND THE ANNULAR SPACE SHALL BE SEALED.

2. WHERE PIPES MUST PASS BELOW FOOTINGS, THE TOP OF THE PIPE SHALL BE GREATER THAN 12" BELOW THE BOTTOM OF THE FOOTING. REFER ALSO TO STRUCTURAL DRAWINGS AND DETAILS FOR ACCOMMODATIONS AT FS-2, TRENCH DRAINS.

3. COORDINATE WITH DIVISION 23 CONTRACTOR FOR EXACT LOCATIONS OF FLOOR DRAINS IN MECHANICAL ROOM AND EQUIPMENT PLATFORM.

Wagner Architecture, pllc
92 ELAM COURT
NEW HILL, NORTH CAROLINA 27562
TEL. (919) 612.5050

Kramer Engineering Services, pllc
5517 Cascade Dr Chapel Hill, NC 27514
TEL (919)933-3350
email: donna@kespllc.com
Firm license: P-1099

bennett&pless
formerly LHC STRUCTURAL ENGINEERS

NV5
NV5 ENGINEERS AND CONSULTANTS, INC.
3300 REGENCY PARKWAY, STE 100
CARY, NC 27518
P: 919.851.1912 www.NV5.com
NC License # F-1333
formerly CALYX Engineers + Consultants

NORTH CAROLINA PROFESSIONAL SEAL 14917 ENGINEER DONNA D. KRAMER 2023

PREPARED FOR
NORTH CAROLINA STATE UNIVERSITY
COLLEGE OF VETERINARY MEDICINE

0 2' 4' 8'
SCALE: 1/4" = 1'-0"

TRUE NORTH
PLAN NORTH

TRANSLATIONAL RESEARCH FACILITY

revisions

building number
cadd file number
drawn by EAP
checked by DDK
date ISSUED FOR CONSTRUCTION – 05/18/23
project number
NCSU CODE: 42124
ITEM: 305
WA 202207
SCO#: 21-24030-01A

WASTE AND VENT PIPING PLAN

sheet number P101
revision number

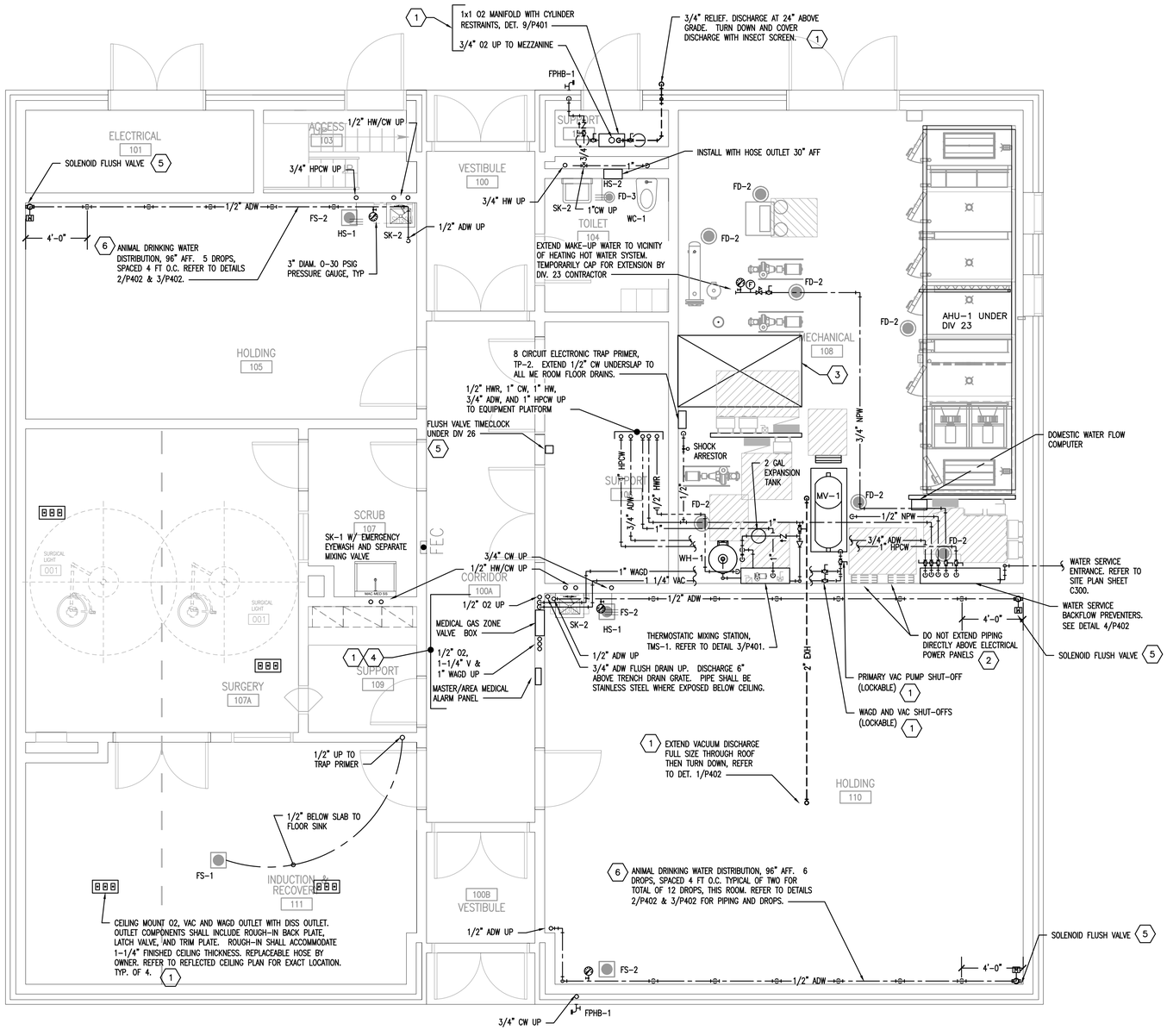

1 P201 FLOOR PLAN – WATER AND MEDICAL GAS PIPING (1)
SCALE: 1/4" = 1'0"

Wagner Architecture, pllc
92 ELAM COURT
NEW HILL, NORTH CAROLINA 27562
TEL. (919) 612.5050

Kramer Engineering Services, pllc
5517 Cascade Dr Chapel Hill, NC 27514
TEL (919)933-3350
email: donna@kespllc.com
Firm license: P-1099

bennett&pless
formerly LHC STRUCTURAL ENGINEERS

NV5
NV5 ENGINEERS AND CONSULTANTS, INC.
3300 REGENCY PARKWAY, STE 100
CARY, NC 27518
P: 919.851.1912 www.NV5.com
NC License # F-1333
formerly CALYX Engineers + Consultants

NORTH CAROLINA PROFESSIONAL SEAL 14917 ENGINEER DONNA D. KRAMER 2023

PREPARED FOR
NORTH CAROLINA STATE UNIVERSITY
COLLEGE OF VETERINARY MEDICINE

SHEET GENERAL NOTES

1. WITH THE EXCEPTION OF MECHANICAL ROOM 108 AND SUPPORT 102, PIPING ROUGH-INS SHALL BE CONCEALED WITHIN THE CORE OF CMU BLOCKS. COPPER PIPING INSTALLED UNDER SLAB AND WITHIN CMU BLOCKS SHALL BE PROTECTED WITH A 0.01" THICK POLYETHYLENE SLEEVE.
2. WITH THE EXCEPTION OF MECHANICAL AND ELECTRICAL ROOMS, ESCUTCHEONS IN FINISHED AREAS SHALL BE ONE PIECE STAINLESS STEEL, SEALED TO FINISH SURFACE. THE ANNULAR SPACE AROUND PIPE PENETRATIONS, BENEATH ESCUTCHEONS, SHALL BE FILLED WITH FLEXIBLE SEALANT AND FINISHED SMOOTH.
3. INCOMING WATER PRESSURE IS EXPECTED TO BE 88 PSI STATIC AND 70 PSI RESIDUAL. BUILDING PRESSURE REGULATOR SHALL BE SET TO 50 PSI.
4. ALL FLOOR MOUNTED EQUIPMENT, INCLUDING WATER HEATER AND VACUUM PUMP SHALL BE INSTALLED ON 4" CONCRETE EQUIPMENT PAD. REFER TO STRUCTURAL PLANS. DO NOT INSTALL EQUIPMENT PAD FOR VACUUM PUMP IF ALTERNATE 9 IS NOT ACCEPTED. SEE KEYED NOTE 1, BELOW.

SHEET KEYED NOTES

(1) ADD ALTERNATE #9: ALL MEDICAL GAS PIPING AND EQUIPMENT INCLUDING VACUUM PUMP, OXYGEN MANIFOLD, ALARM PANEL, VALVE BOX, OUTLETS PROVIDED AND CERTIFIED SPECIFICALLY FOR THE MEDICAL GAS SYSTEM SHALL BE PRICED AS AN ADD ALTERNATE.

(2) DO NOT INSTALL PIPING OR ANY DEVICES OR EQUIPMENT DIRECTLY ABOVE ELECTRICAL POWER PANELS. MAINTAIN A 30"WX36"DX6'6"H WORKING CLEARANCE IN FRONT OF ALL PANELS, VARIABLE SPEED DRIVES, CONTROL PANELS, DISCONNECTS, AND STARTERS.

(3) MAINTAIN CLEAR AREA IN THIS VICINITY TO ALLOW FOR REMOVAL AND REPLACEMENT OF EQUIPMENT ON PLATFORM, ABOVE.

(4) INSTALL ALARM PANEL AND VALVE BOX SO THAT BOTTOM LINES UP WITH BLOCK COURSE, 40"+/- AFF. ENCLOSURES SHALL BE RECESSED IN 6" CMU WALL.

(5) INSTALL FLUSHING LINE AT END OF ANIMAL WATERING BRANCH LINE. EXTEND DISCHARGE LINE TO CORNER AND DOWN TO 6" ABOVE FLOOD LEVEL RIM OF TRENCH DRAIN. INSTALL SOLENOID VALVE AT 5'6" AFF. SOLENOID SHALL BE CONTROLLED BY A TIMECLOCK LOCATED IN SUPPORT 106. TIMECLOCK SHALL BE PROGRAMMABLE AND SHALL INITIALLY BE PROGRAMMED TO OPEN THE NORMALLY CLOSED VALVES FOR 60 SECONDS, EVERY 12 HOURS. TIMECLOCK PROVIDED AND INSTALLED UNDER DIVISION 26. REFER TO SHEET E202 AND DETAIL 1/E407.

(6) EXPOSED ANIMAL DRINKING WATER (ADW) IN HOLDING ROOMS SHALL BE STAINLESS STEEL WITH THREADED FITTINGS. FINISH SHALL BE POLISHED, SATIN, OR BRUSHED FINISH. DO NOT APPLY INSULATION TO ADW, WHERE EXPOSED IN HOLDING ROOMS.

0 2' 4' 8'
SCALE: 1/4" = 1'-0"

TRUE NORTH
PLAN NORTH

TRANSLATIONAL RESEARCH FACILITY

revisions

building number
cadd file number
drawn by EAP
checked by DDK
date ISSUED FOR CONSTRUCTION – 05/18/23
project number
NCSU CODE: 42124
ITEM: 305
WA 202207
SCO#: 21-24030-01A

WATER AND MEDICAL GAS PIPING PLAN

sheet number P201
revision number

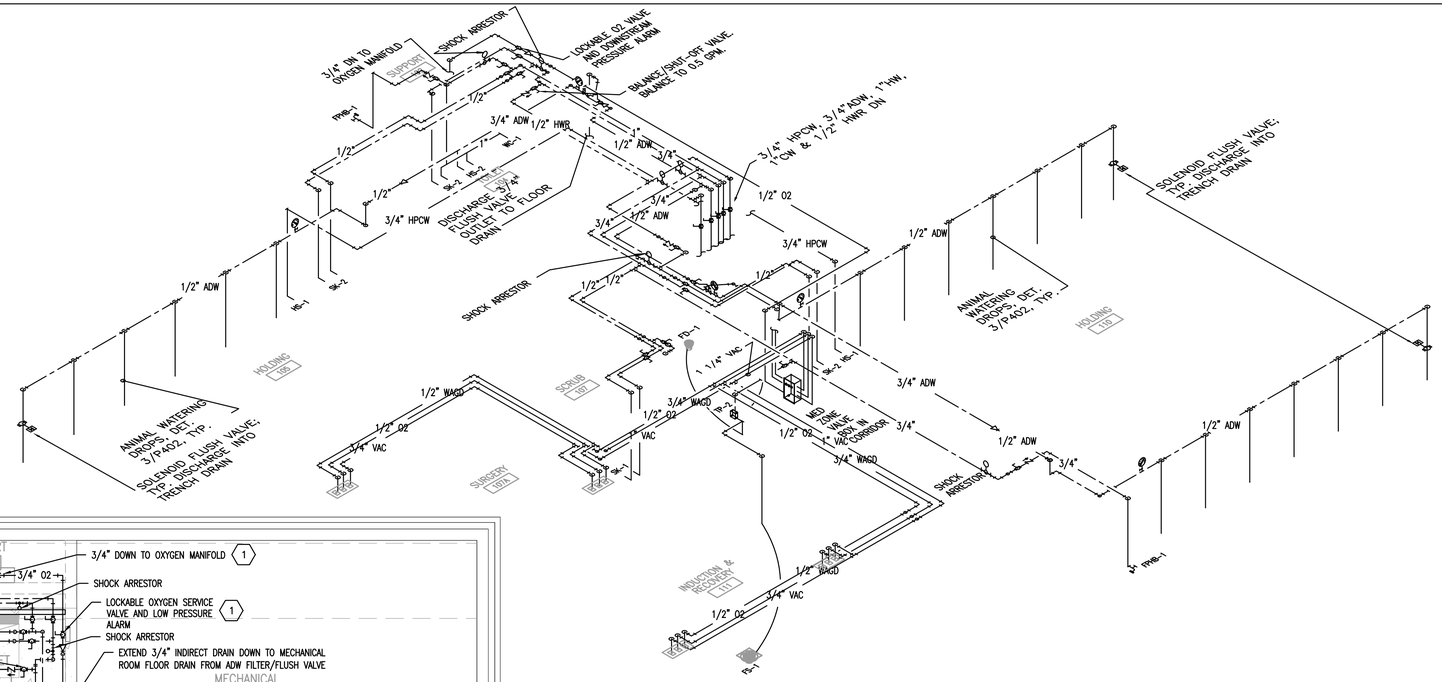

1 P202 WATER AND MEDICAL GAS PIPING RISER 1

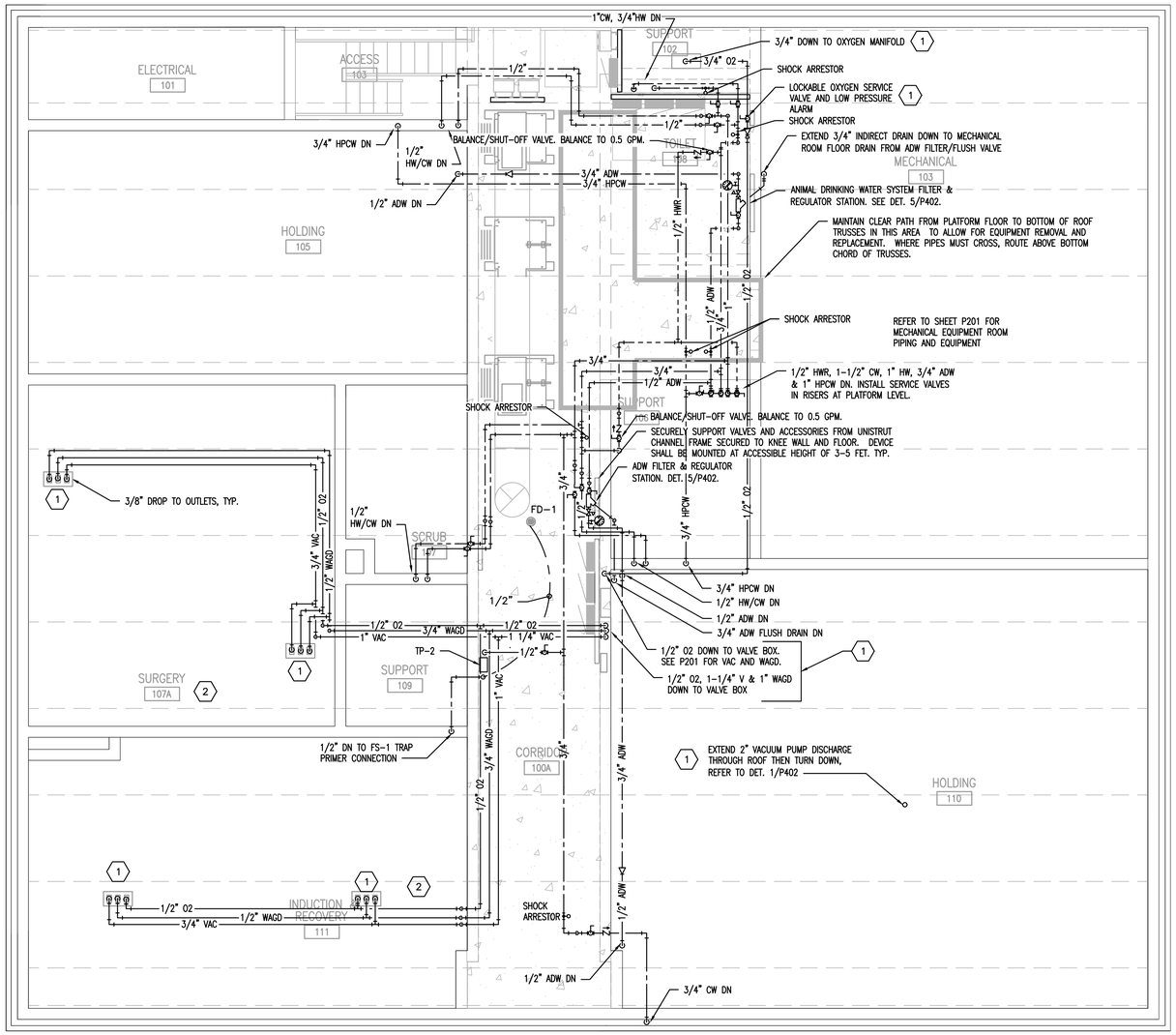

1 P202 EQUIPMENT PLATFORM – WATER AND MEDICAL GAS PIPING DISTRIBUTION 1
SCALE: 1/4" = 1'0"

SHEET KEYED NOTES

1. ADD ALTERNATE #9: ALL MEDICAL GAS PIPING AND EQUIPMENT INCLUDING VACUUM PUMP, OXYGEN MANIFOLD, ALARM PANEL, VALVE BOX, OUTLETS PROVIDED AND CERTIFIED SPECIFICALLY FOR THE MEDICAL GAS SYSTEM SHALL BE PRICED AS AN ADD ALTERNATE.
2. PIPING ABOVE INDUCTION/RECOVERY AND SURGERY ROOMS SHALL BE ROUTED ENTIRELY BETWEEN AND THROUGH TRUSSES. CEILINGS ARE 12'0"AFF TO ACCOMMODATE A HOIST.

Wagner Architecture, pllc
92 ELAM COURT
NEW HILL, NORTH CAROLINA 27562
TEL. (919) 612.5050

Kramer Engineering Services, pllc
5517 Cascade Dr Chapel Hill, NC 27514
TEL (919)933-3350
email: donna@kespllc.com
Firm license: P-1099

bennett&pless
formerly LHC STRUCTURAL ENGINEERS

NV5
NV5 ENGINEERS AND CONSULTANTS, INC.
3300 REGENCY PARKWAY, STE 100
CARY, NC 27518
P: 919.851.1912 www.NV5.com
NC License # F-1333
formerly CALYX Engineers + Consultants

NORTH CAROLINA PROFESSIONAL SEAL 14917 ENGINEER DONNA D. KRAMER 2023

PREPARED FOR
NORTH CAROLINA STATE UNIVERSITY
COLLEGE OF VETERINARY MEDICINE

0 2' 4' 8'
SCALE: 1/4" = 1'-0"

TRUE NORTH
PLAN NORTH

TRANSLATIONAL RESEARCH FACILITY

revisions

building number

cadd file number

drawn by EAP

checked by DDK

date ISSUED FOR CONSTRUCTION – 05/18/23

project number
NCSU CODE: 42124
ITEM: 305
WA 202207
SCO#: 21-24030-01A

EQUIPMENT PLATFORM - WATER AND MEDICAL GAS PIPING PLAN

sheet number: P202

revision number:

PLUMBING DRAIN SCHEDULE

ID	DESCRIPTION	HW	CW	WASTE	VENT
FS-1	FLOOR SINK - TYPE 316, 14 GA. STAINLESS STEEL. 12" SQUARE TOP, WITH FULL STAINLESS STEEL GRATE. DOME STRAINER, 6" DEEP. BOTTOM OUTLET; DEEP SEAL P-TRAP; FLASHING CLAMP; TRAP PRIMER CONNECTION ON DRAIN BODY OR P-TRAP. MFR - JAY R. SMITH MODEL 9692 OR EQUIVALENT BY ZURN, MIFAB, JONES, JOSAM, OR WADE.	-	-	4"	2"
FS-2	FLOOR SINK - HIGH CAPACITY 16X16X12" DEEP FLOOR SINK WITH ALUMINUM DOME STRAINER AND MEMBRANE FLASHING CLAMP; DEEP SEAL P-TRAP. EPOXY COATED CAST IRON INTERIOR. TRENCH DRAIN GRATE SHALL SERVE AS FLOOR SINK GRATE. MFR - JAY R. SMITH MODEL 3450-C-12(SS) OR EQUIVALENT BY ZURN, MIFAB, JONES, JOSAM, OR WADE.	-	-	6"	3"
FD-1	FLOOR DRAIN - GENERAL SERVICE, FLOOR DRAIN WITH ADJUSTABLE STRAINER. 6" DIAMETER, ROUND, NICKEL BRONZE TOP WITH FUNNEL TO ACCEPT INDIRECT WASTE. DURACOATED CAST IRON BODY WITH BOTTOM OUTLET; BODY OR PTRAP TO ACCEPT TRAP PRIMER CONNECTION; FLASHING CLAMP; MFR - JAY R. SMITH MODEL 2005Y OR EQUIVALENT BY ZURN, MIFAB, JONES, JOSAM, OR WADE.	-	-	AS NOTED	-
FD-2	GENERAL PURPOSE, DEEP BODY, MEDIUM DUTY FLOOR DRAIN - CAST IRON BODY WITH 12" ROUND, NICKEL BRONZE TOP, SEDIMENT BUCKET, BOTTOM OUTLET, AND FLASHING CLAMP. PROVIDE WITH TRAP PRIMER CONNECTION. MANUFACTURER: JAY R. SMITH 2240C-NB OR EQUIVALENT BY ZURN, MIFAB, JONES, JOSAM, OR WADE.	-	-	4"	2"
FD-3	FLOOR DRAIN - TOILET ROOM DRAIN. CAST IRON DRAIN TRIMMED WITH ADJUSTABLE 8" ROUND, NICKEL BRONZE TOP. REVERSIBLE FLASHING COLLAR. CAULK OUTLET. MFR - JAY R. SMITH MODEL 2010CA-NB OR EQUIVALENT BY ZURN, MIFAB, JONES, JOSAM, OR WADE.	-	-	4"	2"

PLUMBING FIXTURE SCHEDULES

ID	DESCRIPTION	HW	CW	WASTE	VENT
SK-1	SURGEON'S SCRUB SINK. SINGLE STATION, TYPE 304 STAINLESS STEEL, 16 GA., SCRUB SINK WITH INFRARED SOAP AND WATER DISPENSERS, TEMPERATURE REGULATING MIXING VALVE, EMERGENCY EYEWASH WITH SEPARATE THERMOSTATIC MIXING VALVE. MANUAL KNEE-OPERATION BYPASS FOR BOTH WATER AND SOAP. SWIVEL GOOSENECK SPOUT WITH LAMINAR FLOW, NON-AERATING SPOUT. 120V PLUG-IN POWER SUPPLY. PROVIDE ROUGH-IN AND CONNECTIONS AS FOLLOWS: 1-1/2" 17 GAUGE BRASS, DEEP SEAL P-TRAP WITH SLIP JOINTS AND BRASS CLEANOUT PLUG; CHROME PLATED FINISH. ANGLE STOPS WITH 0.5" SWEAT INLET AND FLEXIBLE TUBE RISER. INSTALL NEW BATTERIES PRIOR TO FINAL INSPECTION. MAC MEDICAL MODEL SS32-IR-IRD-EYE-TV-MB-LF OR EQUAL BY SKYTRON OR STERIS	1/2"	1/2"	2"	1-1/2"
SK-2	HANDWASH/LAVATORY SINK PROVIDED AND INSTALLED BY THIS CONTRACTOR. SINK SHALL BE TYPE 304, 18 GA STAINLESS STEEL WITH INTEGRAL BACKSPLASH AND STAINLESS STEEL SUPPORT BRACKETS. 22"X9"X5.5"D. HANDS-FREE, ELECTRONIC, GOOSENECK CONTROL SPOUT WITH LAMINAR FLOW, NON-AERATING OUTLET. SENSOR OPERATIONS SHALL BE PLUG-IN, 120VAC WITH BATTERY BACKUP. THERMOSTATIC MIXING VALVE. TYPE 316 STAINLESS STEEL STRAINER. MFR: ELKAY MODEL ELV2219 SINK, LKB721C SENSOR FAUCET, AND LK723 THERMOSTATIC MIXING VALVE. EQUIVALENT ACCEPTED BY JUST OR GRIFFIN. PROVIDE ROUGH-IN AND CONNECTIONS AS FOLLOWS: 1-1/2" 17 GAUGE BRASS, DEEP SEAL P-TRAP WITH SLIP JOINTS AND BRASS CLEANOUT PLUG; CHROME-PLATED FINISH. ANGLE STOPS WITH 0.5" SWEAT INLET AND FLEXIBLE TUBE RISER. INSTALL TO PROVIDE 31-1/2" FINISH FLOOR TO RIM HEIGHT. INSTALL NEW BATTERIES PRIOR TO FINAL INSPECTION.	1/2"	1/2"	1-1/2"	1-1/2"
HB-1	MECHANICAL ROOM HOSE BIBB. ANTI-SIPHON, VACUUM BREAKER PROTECTED, BRONZE VALVE BODY WITH METAL HANDLE AND 3/4" HOSE THREAD OUTLET. ZURN WILKINS 195XL VB OR EQUAL BY WOODFORD, T&S BRASS, OR CHICAGO.	-	3/4"	-	-
FPHB-1	FREEZE-PROOF HOSE BIBB. NON-FREEZE, ANTI-SIPHON, AUTOMATIC DRAINING HOSE BIBB. CHROME FINISH WITH BRASS CASING AND BRONZE INTERIOR. METAL WHEEL HANDLE. WALL FLANGE SUPPORT. 3/4" HOSE THREAD OUTLET. ZURN Z1345-CP3 OR EQUAL BY WOODFORD, T&S BRASS, OR CHICAGO.	-	3/4"	-	-
HS-1	HOSE STATION. WASHDOWN HOSE STATION FOR CONCEALED, TOP ENTRY PIPING. WALL MOUNTED WITH INTEGRAL HOSE RACK. BRONZE BODY, GLOBE VALVE, PROVIDE WITH STAINLESS STEEL WALL MOUNTING PLATE. UNIT SHALL BE STRAHMAN M-758 OR EQUIVALENT BY T&S BRASS OR CHICAGO FAUCET CO. INSTALL CHECK VALVE ON HOSE THREAD OUTLET.	3/4"	-	-	-
HS-2	HOSE STATION. HOT AND COLD WATER MIXING MIXING VALVE IN RECESSED BOX. LESS HOSE RACK. BRONZE BODY, GLOBE VALVES, HOT AND COLD CHECK VALVES, BLENDING CHAMBER. ALL EXPOSED FITTINGS STAINLESS STEEL. UNIT SHALL BE STRAHMAN M-159 RECESSED SERIES OR EQUIVALENT BY T&S BRASS OR CHICAGO FAUCET CO.	3/4"	3/4"	-	-
WC-1	WALL-HUNG ACCESSIBLE WATER CLOSET, VITREOUS CHINA, TOP SPUD, MOUNTING HEIGHT TO RIM 17". MFR - KOHLER K-4325-0, OR EQUAL BY CRANE, AMERICAN STANDARD OR ELJER. FLUSH VALVE: 1.28 GPM WITH SOLID RING PIPE SUPPORT AND SWEAT SOLDER ADAPTER KIT. VALVE SHALL BE SENSOR OPERATED, HARDWIRED WITH MECHANICAL OVERRIDE. 11.5" TO VALVE CENTERLINE. VALVE MFR - SLOAN, ROYAL 111-1.28-ESS-TMO WITH EL-154 120VAC/24VAC TRANSFORMER, OR EQUIVALENT BY ZURN OR AMERICAN STANDARD CHAIR CARRIER SHALL BE ADJUSTABLE, NARROW PROFILE, WITH CHROMIUM PLATED NUTS. ELONGATED HEAVY DUTY SEAT, OPEN FRONT. MFR: BEMIS 1955C, BENEKE 523 OR CHURCH 295C	-	1"	4"	2"
TP-2	TRAP PRIMER - MULTI-CIRCUIT ELECTRONIC TRAP PRIMING DEVICE. SURFACE MOUNT ENCLOSURE WITH HINGED ACCESS DOOR. INCLUDES SOLENOID VALVE, VACUUM BREAKER, AND TIMER SET TO DISCHARGE ONCE PER DAY. QUANTITY OF OUTLETS PAS INDICATED ON PLANS. INSTALL 12-18" AFF. MFR - JAY R. SMITH MODEL 270FM, 120V, WITH 1/2" INLET AND OUTLETS OR EQUIVALENT BY ZURN, MIFAB, JONES, JOSAM, OR WADE.	1/2"			

ELECTRIC WATER HEATER SCHEDULE

ID	MFR	MODEL	TANK CAPACITY	ELEMENT INPUT (W) EA.	VOLTS	PHASE	FLA	MIN GPM RECOVERY @100F	THERMOSTAT	ASME
WH-1	A.O. SMITH	DRE-52-12	50 GAL.	4,000	208	3	33.3	49	IMMERSION	150 PSI

NOTE: EQUIVALENT PRODUCTS BY RHEEM, BRADFORD WHITE, AND STATE SHALL BE ACCEPTED.

THERMOSTATIC MIXING STATION SCHEDULE

ID	DESCRIPTION	HW	CW	WASTE	VENT
TMS-1	MULTI-FIXTURE, PRESSURE BALANCED, ROUGH BRONZE, THERMOSTATIC MIXING VALVE FOR HOT WATER. PIPED WITH INLET/OUTLET SHUT-OFF VALVES, GAUGES, ETC. AS DETAILED ON PLANS; DIAL THERMOMETERS ON HOT, COLD AND OUTLET; INTEGRAL STRAINER CHECK STOPS; INTERNAL PARTS OF STAINLESS STEEL. MINIMUM FLOW 1 GPM; PRESSURE DROP OF 20 PSIG AT 36 GPM. LEONARD MODEL XL-52-LF-BDT-IT OR EQUAL BY BRADLEY, WATERSAVER, LAWLER, OR HAWS.	3/4"	3/4" 1" TEMPERED WATER OUTLET	-	-

PUMP SCHEDULE

ID	QTY	LOCATION	PURPOSE	FLUID	MFG	MODEL	SIZE	GPM	DYNAMIC HEAD, FT	MOTOR HP	VOLT/PH
CP-1	1	MECHANICAL 103	DOMESTIC HOT WATER CIRCULATING	WATER	B&G	ECOCIRC XL	36-45	1.5	15	0.075	120/1

MEDICAL VACUUM PUMP

ID	HP(QTY)	SCFM	RECEIVER (GAL)	DESCRIPTION	V/PH	SYSTEM F.L.A.
MV-1	3(2)	17.5	120	DUPLEX LIQUID RING MEDICAL VACUUM SYSTEM SHALL BE FULLY COMPLIANT WITH NFPA99. PACAGE SHALL INCLUDE TWO LIQUID RING VACUUM PUMPS, CONTROL PANEL, AND ALL ACCESSORIES. DUAL SERVICE WAGD AND MEDICAL VACUUM WITH DEDICATED LINES TO EACH SERVICE. PROVIDE OPTIONAL BIOHAZARD INLET FILTER PLUS ONE SPARE REPLACEMENT FILTER. PROVIDE FLEXIBLE CONNECTORS.	208	24
BEACONMEDAES MODEL LPV-3D-RC120V OR EQUAL BY AMICO, OHIO MEDICAL, BECKER OR PATTONS						

SYSTEM: MEDICAL GAS MASTER/AREA ALARM PANEL NOTE 2	OUTPUT								INPUT				ALARMS			BAS	
	DIGITAL				ANALOG				DIGITAL				DIGITAL				
POINT DESCRIPTION	Control Relay	Solenoid	Contactor, Note 1	2-Pos Actuator	Elect/PneuTransducr	Electric Actuator	4-20 mA	0-10 VDC	Current Sensing Switch	Switch Closure	Auxiliary Contact	Pressure Switch	Equipment Status	Maintenance	Pressure	Medical Gas Alarm; Note 1	COMMENTS
MASTER ALARMS																	
OXYGEN MANIFOLD																	
HIGH MAIN LINE PRESSURE			X									X			X	X	LOCATE AFTER MAIN SHUT-OFF. FACTORY SET AT 60 PSIG
LOW MAIN LINE PRESSURE			X									X			X	X	LOCATE AFTER MAIN SHUT-OFF. FACTORY SET AT 40 PSIG, TYP.
CHANGE FROM PRIMARY TO SECONDARY										X			X				LOCATED ON MANIFOLD.
RESERVE IN USE										X			X				LOCATED ON MANIFOLD
RESERVE LOW PRESSURE												X			X		LOCATED ON MANIFOLD
VACUUM/WAGD SOURCE																	
LOW VACUUM/WAGD PRESSURE			X									X			X	X	AFTER PUMP MAIN SHUT-OFF. 12"HG FACTORY SETTING, TYP.
LAG PUMP IN USE										X			X				ON VAC PUMP CONTROL PANEL
LOW VACUUM PRESSURE												X			X		AFTER VACUUM SOURCE SHUT-OFF NEAR PUMP
LOW WAGD PRESSURE												X			X		AFTER WAGD SOURCE SHUT-OFF NEAR PUMP
LOCAL/AREA ALARMS																	
LOW BRANCH OXYGEN PRESSURE												X			X		LOCATE AFTER EQUIPMENT PLATFORM SERVICE VALVE
HIGH ZONE OXYGEN PRESSURE												X			X		LOCATE AFTER ZONE VALVE IN VALVE BOX
LOW ZONE OXYGEN PRESSURE												X			X		LOCATE AFTER ZONE VALVE IN VALVE BOX
LOW VACUUM PRESSURE												X			X		LOCATE AFTER ZONE VALVE IN VALVE BOX
LOW WAGD PRESSURE												X			X		LOCATE AFTER ZONE VALVE IN VALVE BOX

Notes:
1. Dry contact output to Building Automation System (BAS) shall originate from either an interface relay module in the master alarm panel or from a separate pressure switch.
2. Medical gas system, including alarm devices, alarm panel, zone valves, and interface to the BAS shall be included as **Add Alternate #9**.

Wagner Architecture, pllc
92 ELAM COURT
NEW HILL, NORTH CAROLINA 27562
TEL. (919) 612.5050

Kramer Engineering Services, pllc
5517 Cascade Dr Chapel Hill, NC 27514
TEL (919)933-3350
email: donna@kespllc.com
Firm license: P-1099

bennett&pless
formerly LHC STRUCTURAL ENGINEERS

NV5
NV5 ENGINEERS AND CONSULTANTS, INC.
3300 REGENCY PARKWAY, STE 100
CARY, NC 27518
P: 919.851.1912 www.NV5.com
NC License # F-1333
formerly CALYX Engineers + Consultants

NORTH CAROLINA PROFESSIONAL SEAL 14917 ENGINEER DONNA D. KRAMER 2023

PREPARED FOR
NORTH CAROLINA STATE UNIVERSITY
COLLEGE OF VETERINARY MEDICINE

TRANSLATIONAL RESEARCH FACILITY

revisions

building number

cadd file number

drawn by EAP

checked by DDK

date ISSUED FOR CONSTRUCTION – 05/18/23

project number
NCSU CODE: 42124
ITEM: 305
WA 202207
SCO#: 21–24030–01A

PLUMBING SCHEDULES

sheet number: P301

revision number:

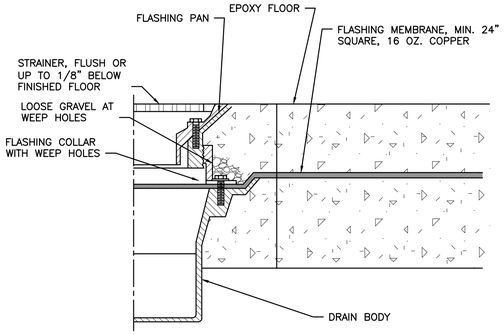

NOTES:
1. SLOPE MEMBRANE LINER 2% TO DRAIN.
2. PROVIDE FLASHING MEMBRANE WHEN DRAIN IS INSTALLED IN A NON-MEMBRANE FLOOR.

1 P401 FLOOR DRAIN OR FLOOR SINK DETAIL
NO SCALE

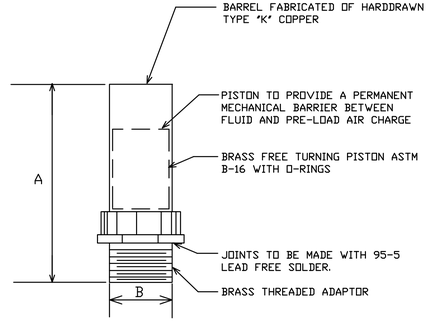

PIPE SIZE	P.D.I. SYMBOL	FIXTURE UNIT RATINGS	A DIM.	B DIM.
1/2"	A	1 - 11	5"	1/2"
3/4"	B	12 - 32	5"	3/4"
1"	C	33 - 60	7"	1"
1-1/4"	D	61 - 113	7"	1-1/4"
1-1/2"	E	114 - 154	9"	1-1/2"
2"	F	155 - 330	9"	2"

NOTE: REFER TO WATER PIPING PLANS FOR LOCATIONS OF SHOCK ABSORBERS.

2 P401 SHOCK ABSORBER DETAIL
NO SCALE

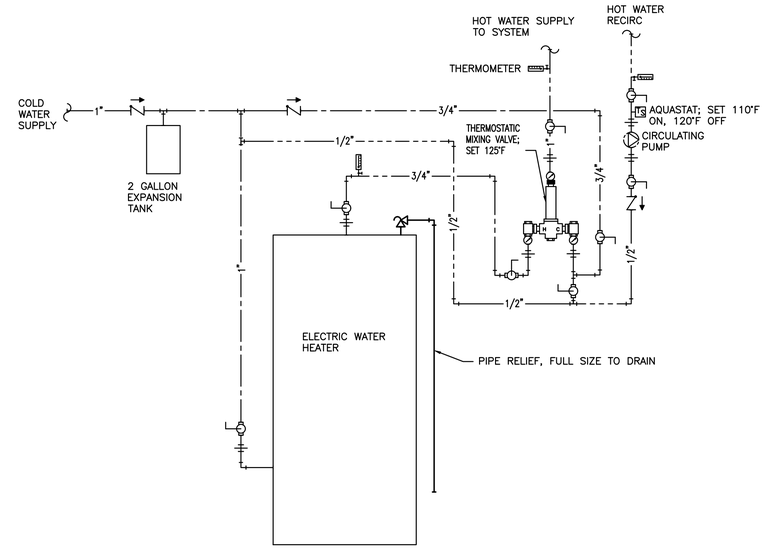

3 P401 DOMESTIC WATER HEATER AND MIXING VALVE SCHEMATIC
NO SCALE

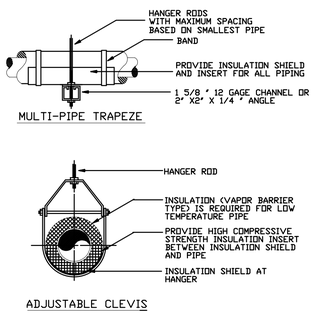

4 P401 PIPE HANGERS
SCALE: NONE

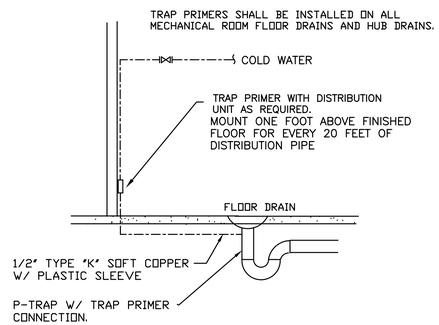

5 P401 TRAP PRIMER SCHEMATIC
NO SCALE

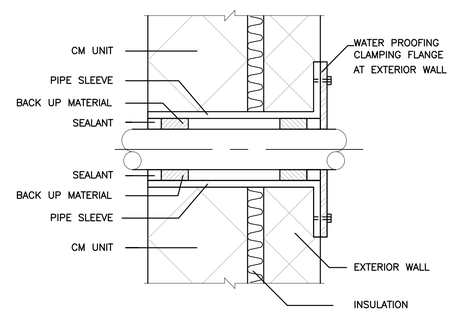

6 P401 PIPE SLEEVE THROUGH EXTERIOR OR FOUNDATION WALL, BELOW GRADE
NO SCALE

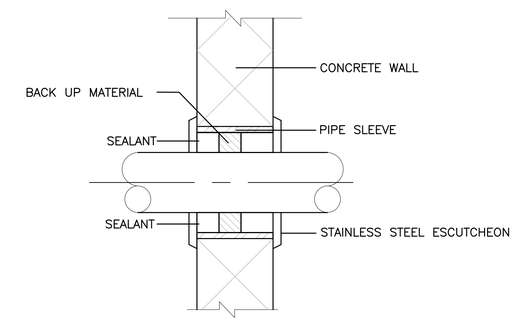

7 P401 PIPE SLEEVE THROUGH INTERIOR WALL, ABOVE GRADE
NO SCALE

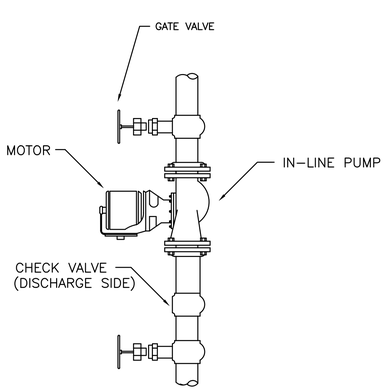

8 P401 DOMESTIC WATER RECIRCULATING PUMP
NO SCALE

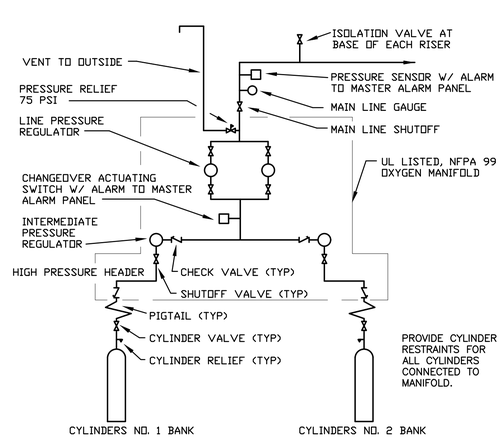

9 P401 MEDICAL GAS CYLINDER SUPPLY
NO SCALE

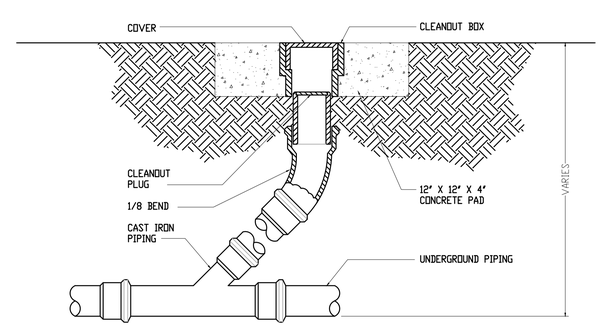

10 P401 YARD CLEANOUT
NO SCALE

Wagner Architecture, pllc
92 ELAM COURT
NEW HILL, NORTH CAROLINA 27562
TEL. (919) 612.5050

Kramer Engineering Services, pllc
5517 Cascade Dr Chapel Hill, NC 27514
TEL (919)933-3350
email: donna@kespllc.com
Firm license: P-1099

bennett&pless
formerly LHC STRUCTURAL ENGINEERS

NV5
NV5 ENGINEERS AND CONSULTANTS, INC.
3300 REGENCY PARKWAY, STE 100
CARY, NC 27518
P: 919.851.1912 www.NV5.com
NC License #F-1313
formerly CALN Engineers + Consultants

NORTH CAROLINA PROFESSIONAL SEAL 14917 ENGINEER DONNA D. KRAMER 2023

PREPARED FOR
NORTH CAROLINA STATE UNIVERSITY
COLLEGE OF VETERINARY MEDICINE

TRANSLATIONAL RESEARCH FACILITY

revisions

building number

cadd file number

drawn by EAP

checked by DDK

date ISSUED FOR CONSTRUCTION – 05/18/23

project number
NCSU CODE: 42124
ITEM: 305
WA 202207
SCO#: 21-24030-01A

PLUMBING DETAILS

sheet number: P401

revision number:

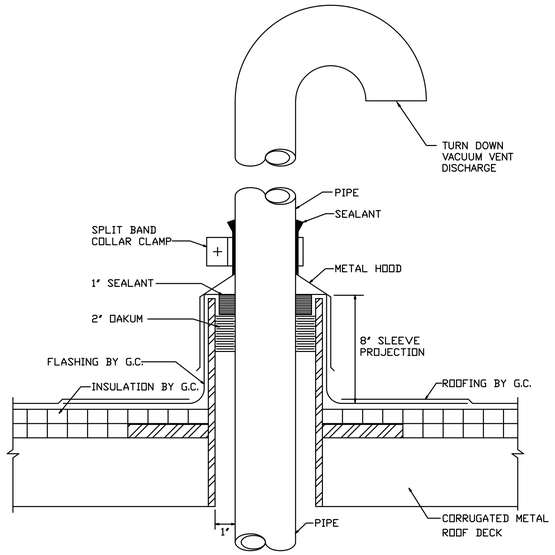

1 P402 TYPICAL PIPE/VENT THRU ROOF
NO SCALE

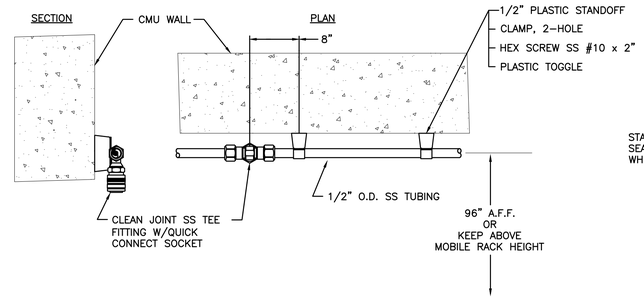

NOTES:
1. OFFSET PIPING AND PROTECTIVE CHANNEL 3/4"–1" FROM WALL TO ALLOW WALL CLEANING.
2. ALL EXPOSED PIPING IN HOLDING ROOMS SHALL BE STAINLESS STEEL WITH POLISHED OR BRUSHED FINISH.
3. INSTALL PRESSURE REDUCING AND FILTER STATION UPSTREAM OF ROOM DISTRIBUTION IN LOCATION NOTED ON PLANS. AT THE LOCATION WHERE ANIMAL WATERING ENTERS THE ROOM, INSTALL A 0–30 PSIG OUTLET GAGE.

2 P402 ROOM LEVEL DISTRIBUTION PIPING FOR ANIMAL WATERING
NO SCALE

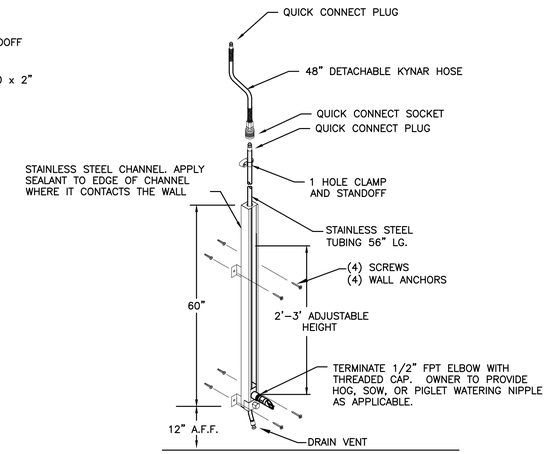

NOTE: COORDINATE EXACT LOCATIONS WITH OWNER OR ANIMAL CAGING MANUFACTURER.

3 P402 ADJUSTABLE HEIGHT ANIMAL WATERING OUTLET
NO SCALE

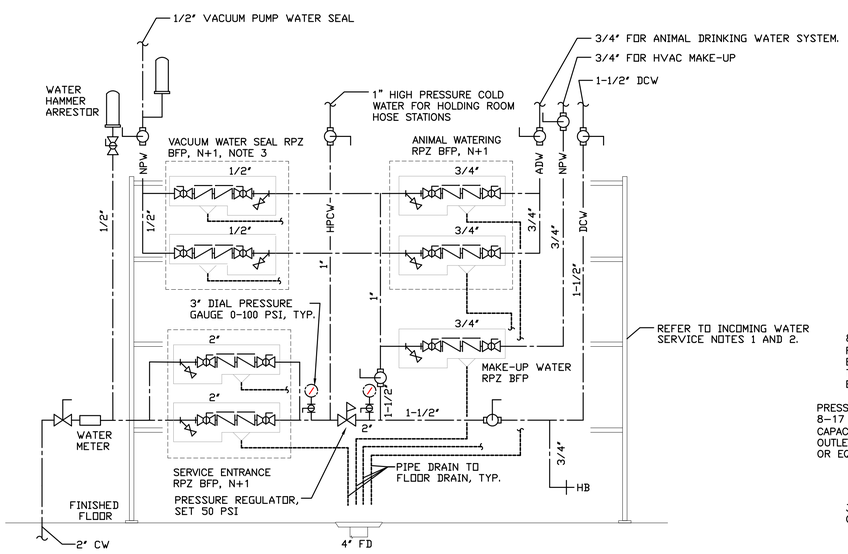

INCOMING WATER SERVICE NOTES:

1. MULTIPLE TIER SUPPORT RACK CONSTRUCTED OF 1-1/2"x1-1/2"x1/4" STEEL ANGLE, SHOP FABRICATED AND WELDED, FITTED WITH CROSS FRAME SUPPORT CHANNELS AND PIPE CRADLES FOR BFP ASSEMBLIES, VALVES, AND PIPING. CONTINUOUS WELD ALL CONTACT POINTS, CLEAN TO BRIGHT METAL, PRE-PAINT, AND COAT FINAL ASSEMBLY WITH TWO SEPARATE DRIED COATS OF HARD EPOXY PAINT.
2. ARRANGE HEADER TO COMPLY WITH STATE AND LOCAL CODES REGARDING ACCESS, TESTING, OPERATION, AND READABILITY FROM FINISHED FLOOR. PROVIDE MINIMUM 12" CLEARANCE ON EACH SIDE OF BACKFLOW DEVICES. INSTALL DEVICES MINIMUM 12" ABOVE FINISHED FLOOR AND AT A MAXIMUM HEIGHT OF 60" ABOVE FINISHED FLOOR.
3. MEDICAL GAS SYSTEM SHALL BE PRICED AS ADD ALTERNATE NUMBER 9, INCLUDING VACUUM WATER SEAL BACKFLOW PREVENTER. HOLD SPACE ON RACK FOR FUTURE INSTALLATION IF ALTERNATE IS NOT ACCEPTED.

4 P402 WATER SERVICE ENTRANCE DETAIL
NO SCALE

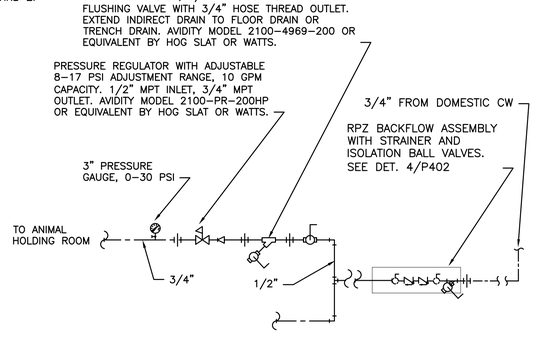

NOTES:
1. INSTALL ONE STATION PER HOLDING ROOM.
2. ALL PIPING EXPOSED WITHIN HOLDING ROOMS SHALL BE STAINLESS STEEL.
3. INSTALL ASSEMBLY ON CHANNEL SUPPORT RACK AT SERVICE HEIGHT OF 3–5 FT.

5 P402 ANIMAL WATERING FILTER/REGULATOR STATION SCHEMATIC
SCALE: NONE

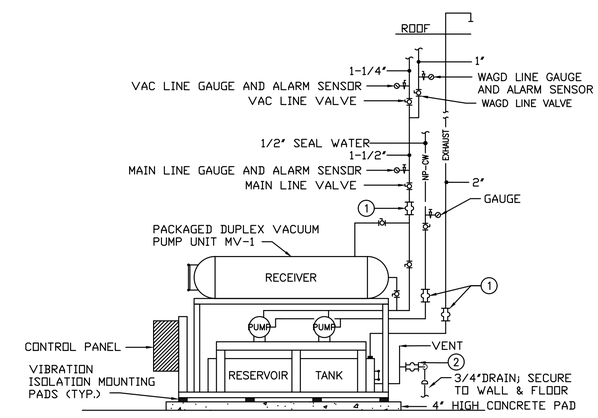

KEYED NOTES

1. POINT OF CONNECTION TO UNIT USING FLEX CONNECTION FURNISHED LOOSE WITH PACKAGED UNIT.
2. POINT OF CONNECTION TO RESERVOIR TANK DRAIN; CONTRACTOR TO FURNISH FLEXIBLE CONNECTOR.

GENERAL NOTES

A. PIPE ALL DRAINS & DISCHARGES FULL SIZE TO FLOOR DRAIN.
B. THE PACKAGED VACUUM PUMP UNIT IS SHOWN DIAGRAMMATIC ONLY & DOES NOT SHOW MANUFACTURER'S PIPING, VALVES, GAUGES, ETC.
C. BOLT VACUUM PUMP UNIT TO CONCRETE PAD USING ALL MOUNTING HOLES WITH MAXIMUM BOLT SIZE.
D. SECURE ALL PIPING TO WALLS, STRUCTURE, AND FLOOR.
E. VACUUM PUMP, ALARMS, INSTALLATION, AND CERTIFICATION SHALL MEET REQUIREMENTS OF NFPA–99 FOR A MEDICAL VACUUM SYSTEM.
F. VACUUM PUMP SHALL NOT BE INCLUDED IN THE BASE PRICE. ALTERNATE NO. 9 INCLUDES THE ENTIRETY OF THE MEDICAL GAS SYSTEM AND SHALL INCLUDE THE VACUUM PUMP, FOUNDATION PADS, ELECTRICAL CONNECTIONS, EXHAUST PIPING BETWEEN THE VACUUM PUMP AND THE FLEXIBLE CONNECTION, DRAINS, VACUUM PIPING, ALARM, AND COLD WATER PIPING

6 P402 VACUUM PUMP PIPING SCHEMATIC
SCALE: NONE

Wagner Architecture, pllc
92 ELAM COURT
NEW HILL, NORTH CAROLINA 27562
TEL. (919) 612.5050

Kramer Engineering Services, pllc
5517 Cascade Dr Chapel Hill, NC 27514
TEL (919)933-3350
email: donna@kespllc.com
Firm license: P-1099

bennett&pless
formerly LHC STRUCTURAL ENGINEERS

NV5
NV5 ENGINEERS AND CONSULTANTS, INC.
3300 REGENCY PARKWAY, STE 100
CARY, NC 27518
P: 919.851.1912 www.NV5.com
NC License #F-1313
formerly CALYX Engineers + Consultants

NORTH CAROLINA PROFESSIONAL SEAL 14917 ENGINEER DONNA D. KRAMER 2023

PREPARED FOR
NORTH CAROLINA STATE UNIVERSITY
COLLEGE OF VETERINARY MEDICINE

TRANSLATIONAL RESEARCH FACILITY

revisions

building number

cadd file number

drawn by EAP

checked by DDK

date ISSUED FOR CONSTRUCTION – 05/18/23

project number
NCSU CODE: 42124
ITEM: 305
WA 202207
SCO#: 21–24030–01A

PLUMBING DETAILS

sheet number P402

revision number

HVAC ABBREVIATIONS

℄	CENTER LINE
∠	ANGLE
ø	ROUND, DIAMETER OR PHASE
#	POUNDS OR NUMBER
A	COMPRESSED AIR
ABB	ABBREVIATION
ABV	ABOVE
ABV CLG	ABOVE CEILING
ACCU	AIR COOLED CONDENSING UNIT
ACFM	AIR CHANGES PER HOUR
ACU	AIR CONDITIONING UNIT
AC/HR	AIR CHANGES PER HOUR
AD	ACCESS DOOR OR ARE DRAIN
ADC	AIR DIFFUSION COUNCIL
AFF	ABOVE FINISHED FLOOR
AFG	ABOVE FINISHED GRADE
AHU	AIR HANDLING UNIT
ALUM	ALUMINUM
ALT	ALTERNATE
AMCA	AIR MOVEMENT AND CONTROL ASSOCIATION
ANSI	AMERICAN NATIONAL STANDARD ASSOCIATION
AP	ACCESS PANEL
APPROX	APPROXIMATE
ARF	ABOVE RAISED FLOOR
ARCH	ARCHITECT/ARCHITECTURAL
ASHRAE	AMERICAN SOCIETY OF HEATING REFIGERATING AND AIR CONDITIONING ENGINEERS
ASME	AMERICAN SOCIETY OF MECHANICAL ENGINEERS
AUTO	AUTOMATIC
AV	ACID VENT
AW	ACID WASTE
AWWA	AMERICAN WATER WORKS ASSOCIATION
BBD	BOILER BLOWDOWN
BEL	BELOW
BF	BELOW FLOOR
BFP	BACKFLOW PREVENTER
BFW	BOILER FEED WATER
BHP	BRAKE HORSEPOWER
BLR	BOILER
BM	BEAM
BOD	BOTTOM OF DUCT
BOP	BOTTOM OF PIPE
BOT	BOTTOM
BTU	BRITISH THERMAL UNIT
BTUM	BRITISH THERMAL UNIT PER HOUR
CAP	CAPACITY
C	CELSIUS
CD	CONDENSATE DRAIN OR CEILING DIFFUSER
CF	CHEMICAL FEED
CFH	CUBIC FEET PER HOUR
CFM	CUBIT FEET PER MINUTE
CHWP	CHILLED WATER PUMP
CHWR	CHILLED WATER RETURN
CHWS	CHILLED WATER SUPPLY
CI	CAST IRON
CLE	CENTERLINE ELEVATION
CLG	CEILING
CO	CLEAN OUT
COL	COLUMN
CONC	CONCRETE
CONN	CONNECT/CONNECTION
CONST	CONSTRUCTION
CONTR	CONTRACTOR
COORD	COORDINATE
COP	COEFFICIENT OF PERFORMANCE
CT	COOLING TOWER
CTE	CONNECT TO EXISTING (AT THIS POINT)
CTR	CENTER
CU	COPPER
CU FT	CUBIC FOOT
CW	COLD WATER OR CITY WATER
CDWP	CONDENSER WATER PUMP
CDWR	CONDENSER WATER RETURN
CDWS	CONDENSER WATER SUPPLY
CU YD	CUBIC YARD
DAP	DUCT ACCESS PANEL
DB	DRY BULB
DG	DOOR GRILLE
DH	DUCT HEATER
DI	DUCTILE IRON DIA DIAMETER
DIA	DIAMETER
DN	DOWN
DD	DUCT MOUNTED SMOKE DETECTOR
DP	DIFFERENTIAL PRESSURE
DPR	DAMPER
DW	DISHWASHER
DWG	DRAWING
DX	DIRECT EXPANSION
EA	EACH, EXHAUST AIR
EAT	ENTERING AIR TEMPERATURE
EF	EXHAUST FAN
EFF	EFFICIENCY
EH	ELECTRONIC HEATER
EJ	EXPANSION JOINT
EL	ELEVATION
ELEC	ELECTRICAL
EQUIP	EQUIPMENT
ESP	EXTERNAL STATIC PRESSURE
EWC	ELECTRIC WATER COOLER
EWT	ENTERING WATER TEMPERATURE
EXH	EXHAUST
EXIST	EXISTING
F	FAHRENHEIT
FD	FIRE DAMPER, FLOOR DRAIN
FCU	FAN COIL UNIT
FF	FINISHED FLOOR
FFE	FINISHED FLOOR ELEVATION
FL, FLR	FLOOR
FLEX	FLEXIBLE
FOB	FLAT ON BOTTOM
FOR	FUEL OIL RETURN
FOS	FUEL OIL SUPPLY
FOT	FLAT ON TOP
FOV	FUEL OIL VENT
FPM	FEET PER MINUTE
FPS	FEET PER SECOND
FS	FLOOR SINK
FT	FOOT
FTG	FOOTING
FURN	FURNISH
FWG	FEET WATER GAUGE
G	NATURAL GAS
GA	GAGE
GAL	GALLONS
GALV	GALVANIZED
GC	GENERAL CONTRACTOR
GPH	GALLONS PER HOUR
GPM	GALLONS PER MINUTE
GR	GRADE
GWI	GALVANIZED WROUGHT IRON
HC	HANDICAPPED
HD	HUB DRAIN OR HEAT DETECTOR
HGR	HANGER
HOA	HAND–OFF–AUTOMATIC
HORZ	HORIZONTAL
HP	HIGH PRESSURE OR HORSEPOWER
HPR	HIGH PRESSURE CONDENSATE RETURN
HPS	HIGH PRESSURE STEAM
H'STAT	HUMIDISTAT
HT	HEIGHT
HTG	HEATING
HVAC	HEATING, VENTILATING & AIR CONDITIONING
HWR	HEATING WATER RETURN
HWS	HEATING WATER SUPPLY
ID	INSIDE DIAMETER
IE	INVERT ELEVATION
IM	ICE MACHINE/ICE MAKER
IN	INCH
INV	INVERT
JST	JOIST
KIT	KITCHEN
KW	KILOWATT
KWH	KILOWATT HOUR
LAB	LABORATORY
LAT	LEAVING AIR TEMPERATURE
LAV	LAVATORY
LB/HR	POUNDS PER HOUR
LCD	LINEAR CEILING DIFFUSER
LP	LOW PRESSURE
LPR	LOW PRESSURE CONDENSATE RETURN
LPS	LOW PRESSURE STEAM
LWT	LEAVING WATER TEMPERATURE
M	MAIN AIR SUPPLY
MAX	MAXIMUM
MBH	BTUH X 1000
MECH	MECHANICAL
MEZZ	MEZZANINE
MFG	MANUFACTURING
MFR	MANUFACTURER
MH	MANHOLE
MIN	MINIMUM
MOD	MOTOR OPERATED DAMPER
MTD	MOUNTED
MVD	MANUAL VOLUME DAMPER
N	NITROGEN
NC	NORMALLY CLOSED
NEC	NATION ELECTRIC CODE
NEMA	NATIONAL ELECTRICAL MANUFACTURERS ASSOCIATION
NFPA	NATIONAL FIRE PROTECTION ASSOCIATION
NIC	NOT IN CONTRACT
NO	NORMALLY OPEN, NITROUS OXIDE, NUMBER
NOM	NOMINAL
NPSH	NET POSITIVE SUCTION HEAD
NRS	NON RISING STEM
NTS	NOT TO SCALE
O	OXYGEN
OA	OUTSIDE AIR
OBD	OPPOSED BLADE DAMPER
OC	ON CENTER
OD	OUTSIDE DAMPER
OFCI	OWNER FURNISHED, CONTRACTOR INSTALLED
OFOI	OWNER FURNISHED, OWNER INSTALLED
OPP	OPPOSITE
OSAY	OUTSIDE SCREW AND YOKE
P	PUMP
PBD	PARALLEL BLADE DAMPER
PDI	PLUMBING AND DRAINAGE INSTITUTE
PR	PUMPED CONDENSATE RETURN
PCHWP	PRIMARY CHILLED WATER PUMP
PD	PRESSURE DROP
PPH	POUNDS PER HOUR
PRV	PRESSURE REDUCING VALVE
PSI	POUNDS PER SQUARE INCH
PSIA	POUNDS PER SQUARE INCH ABSOLUTE
PSIG	POUNDS PER SQUARE INCH GAUGE
P SLV	PIPE SLEEVE
PT	POINT
PVC	POLYVINYL CHLORIDE
QTY	QUALITY
RA	RETURN AIR
RCU	REFRIGERANT CONDENSING UNIT
RD	ROUND, ROOF DRAIN
RECIRC	RECIRCULATING
RED	REDUCER
REINF	REINFORCING
REL	RELOCATE
REM	REMOVE
REQ'D	REQUIRED
RET	RETURN
REV	REVISION
RF	RETURN FAN
RH	RELATIVE HUMIDITY
RL	RAIN LEADER OR REFRIGERANT LIQUID
RM	ROOM
RPM	REVOLUTIONS PER MINUTE
RS	RISING STEAM OR REFRIGERANT SUCTION
SA	SUPPLY AIR
SCH	SCHEDULE
SCHWP	SECONDARY CHILLED WATER PUMP
SCFM	STANDARD CUBIC FEET PER MINUTE
SD	SMOKE DAMPER OR STORM DRAIN
SECT	SECTION
SF	SUPPLY FAN
SH	SHOWER
SHT	SHEET
SK	SERVICE SINK
SM	SHEET METAL
SMACHNA	SHEET METAL AND AIR CONDITIONING CONTRACTORS NATIONAL ASSOCIATION
SP	STATIC PRESSURE OF SURGE PROTECTED
SPEC	SPECIFICATION
SQ	SQUARE
SRV	SAFETY RELIEF VALVE
SS	SERVICE SINK, STATINLESS STEEL OR SANITARY SEWER
STA	STATION
STM	STEAM
SYM	SYMBOL OR SYMMETRICAL
SYS	SYSTEM
TEMP	TEMPERATURE
T & B	TOP AND BOTTOM
TAB	TEST AND BALANCE
TD	TRENCH DRAIN
TOC	TOP OF CURB
TOD	TOP OF DUCT
TOP	TOP OF PIPE
TOS	TOP OF STEEL
TP	TRAP PRIMER
TR	THROUGH ROOF
TS	TIGHT TO STRUCTURE
TSTAT	THERMOSTAT
TYP	TYPICAL
UC	UNDERCOUNTER
UF	UNDER FLOOR
UG	UNDERGROUND
UL	UNDERWRITERS LABORATORIES
UN	UNIT HEATER
UR	URINAL
V	VENT
VAC	VACUUM (SUCTION)
VERT	VERTICAL
VB	VACUUM BREAKER
VLV	VALVE
VOL	VOLUME
VTR	VENT THROUGH ROOF
W/	WITH
W/O	WITHOUT
WB	WET BULB
WC	WATER CLOSET
WG	WATER GAUGE
WP	WEATHERPROOF
WSV	WATER STACK VENT

DUCTWORK SYMBOLS

20x10	SHEET METAL DUCT DIMENSIONS, INCHES. FIRST DIMENSION IS WIDTH. DIMENSIONS ARE NET.
20x10 16x10	TRANSITION
	CHANGE IN DUCT ELEVATION RISE (R) DROP (D)
20x10	DIRECTION OF FLOW IN DUCT
20x10	SPIN–IN FITTING AND BALANCING DAMPER WITH LOCKING QUADRANT OPERATOR
VD	MANUAL VOLUME DAMPER
B	SLIDING BLAST GATE DAMPER, MOUNTED AT CEILING, UNO
RH–10	REHEAT COIL, ID RH–10
20x12 C 75	SIDEWALL SUPPLY GRILLE OR REGISTER, TYPE 'C', 75 CFM
20x12 D 100	SIDEWALL RETURN OR EXHAUST GRILLE OR REGISTER, TYPE 'D', 100 CFM
200 A	SUPPLY DIFFUSER, TYPE 'A', 200 CFM
300 B	EXHAUST GRILLE, TYPE 'B', 300 CFM
DES 300/ ACT 253	WHERE SHOWN ADJACENT TO AN EXISTING DIFFUSER OR GRILLE, INDICATES DESIGN CFM (E.G. 300) AND RECENTLY MEASURED OR ACTUAL CFM (E.G. 253)
A.D. OR	DUCT ACCESS DOOR
16x10	RADUIS ELBOW R=1.5D
16x10	MITERED ELBOW, WITH TURNING VANES
16x10	SUPPLY DUCT TURNING UP
16x10	SUPPLY DUCT TURNING DOWN
16x10	EXHAUST DUCT TURNING UP
16x10	EXHAUST DUCT TURNING DOWN
9"ø	FLEXIBLE DUCT
FD 16x16	FIRE DAMPER AT WALL (PROVIDE ACCESS DOOR)
FSD 16x16	COMBINATION SMOKE/FIRE DAMPER AT WALL (PROVIDE ACCESS DOOR)
DD 16x16	DUCT MOUNTED SMOKE DETECTOR (PROVIDE ACCESS DOOR)
TB–X	SINGLE DUCT TERMINAL BOX WITH HOT WATER REHEAT
	AIR CONTROL VALVE SAV = SUPPLY AIR VALVE GEV = GENERAL EXHAUST AIR VALVE FEV = FUME HOOD OR DUCTED BIOSAFETY CABINET AIR VALVE
OR	RELATIVE DIRECTION OF AIRFLOW FROM POSITIVE TO NEGATIVE

CEILING MOUNTED DEVICES (BY OTHERS)

	PENDANT SPRINKLER
	UPRIGHT SPRINKLER
	OCCUPANCY SENSOR
	SMOKE DETECTOR
	STEAM DAM (AKA EXHAUST HOOD) BY OTHERS WITH EXHAUST GRILLE BY MECHANICAL CONTRACTOR
	LIGHT FIXTURES
	CEILING ACCESS PANEL
	SECURITY CAMERA

PIPING SYMBOLS

MPS	MEDIUM PRESSURE STEAM PIPING
MPR	MEDIUM PRESSURE CONDENSATE PIPING
LPS	LOW PRESSURE STEAM PIPING
LPR	LOW PRESSURE GRAVITY STEAM RETURN
CHWS	CHILLED WATER SUPPLY
CHWR	CHILLED WATER RETURN
PCHWS	PROCESSED CHILLED WATER SUPPLY
PCHWR	PROCESSED CHILLED WATER RETURN
HWS	HEATING HOT WATER SUPPLY
HWR	HEATING HOT WATER RETURN
PCR	PUMPED CONDENSATE RETURN
D	INDIRECT GRAVITY DRAIN
V	PRESSURE RELIEF VENT
PT	TEMPERATURE AND PRESSURE RELIEF VALVE
P	PRESSURE RELIEF VALVE
	VACUUM BREAKER
	THERMOMETER
	PRESSURE GAUGE
	PUMP, SCHEMATIC SYMBOL
H–100	BACKFLOW PREVENTER VALVE
OR	CONCENTRIC PIPE REDUCER
	ECCENTRIC PIPE REDUCER
	BALL VALVE
	GATE VALVE
	PRESSURE REGULATING VALVE
	CHECK VALVE
	BUTTERFLY VALVE
	MOTOR OPERATED VALVE
	GLOBE VALVE
	F&T STEAM TRAP ASSEMBLY
B	BUCKET STEAM TRAP ASSEMBLY
	PIPE DOWN
	PIPE UP
	FLEXIBLE PIPE CONNECTOR
A M	AIR VENT, AUTOMATIC (A) OR MANUAL (M)
	PIPE STRAINER

CONTROLS AND SENSORS

T	PNEUMATIC THERMOSTAT, MOUNT ADJACENT TO LIGHT SWITCH AND AT SAME HEIGHT, MAX. 48" AFF TO TOP OF DEVICE
T	DIGITAL THERMOSTAT, MOUNT ADJACENT TO LIGHT SWITCH AND AT SAME HEIGHT, MAX. 48" AFF TO TOP OF DEVICE
	DUCT–MOUNTED, COMBINATION TEMPERATURE/HUMIDITY SENSOR
	DUCT–MOUNTED, TEMPERATURE SENSOR
	WALL–MOUNTED, TEMPERATURE SENSOR. NO USER ADJUSTMENT.
	WALL–MOUNTED, COMBINATION TEMPERATURE/HUMIDITY SENSOR
H	DIGITAL HUMIDITY SENSOR; DUCT OR WALL MOUNTED
F	FLOW METER
F	FLOW SWITCH
ΔP	DIFFERENTIAL PRESSURE SENSOR
EPT	ELECTRO–PNEUMATIC TRANSDUCER
	STARTER/DISCONNECT
	DISCONNECT
	STARTER
	BALL–IN–WALL AIRFLOW DIRECTION INDICATOR

GENERAL SYMBOLS

	CONNECT TO EXISTING
	POINT OF CONNECTION BETWEEN EXISTING TO BE REMOVED AND EXISTING TO REMAIN
1 M–101	PLAN OR DETAIL NUMBER DRAWING NUMBER
1 M–101	SECTION NUMBER SHOWN ON DRAWING NUMBER
3	KEYED NOTE NUMBER
1	REVISION NUMBER
	1–HOUR FIRE BARRIER
	2–HOUR FIRE BARRIER
	PIPING TO BE DEMOLISHED
18x14	EXISTING DUCT OR EQUIPMENT TO BE DEMOLISHED
X–FS	PIPING OR EQUIPMENT SHOWN WITH A SCREENED LINETYPE OR DESIGNATED WITH AN 'X–' IS EXISTING
12x12 4" X	DASHED OR FADED LINE TYPE ON PIPING, DUCTWORK AND EQUIPMENT INDICATES EXISTING, TYPICAL
	BREAK LINE
1	REVISION CLOUD

COORDINATION NOTES:

1. COORDINATE INSTALLATION WITH ELECTRICAL AND PLUMBING SUBCONTRACTORS TO MAINTAIN REQUIRED CLEARANCE TO EQUIPMENT, CONTROLLERS, VALVES, ETC., PARTICULARLY IN MECHANICAL ROOM AND PLATFORM WHERE EQUIPMENT OF MULTIPLE TRADES ARE INSTALLED.
2. COORDINATE INSTALLATION OF DUCTWORK TO PROVIDE ACCESS TO VALVES, CABLE TRAYS, AND OTHER EQUIPMENT REQUIRING SERVICE. PROVIDE RISES, DROPS, ETC. AS NEEDED AT DUCT CROSSINGS AND TO COORDINATE THE INSTALLATION WITH OTHER TRADES.
3. ACCESS TO BUILDINGS AND MECHANICAL ROOMS OF OTHER BUILDINGS MUST BE MAINTAINED AT ALL TIMES DURING THE COMPLETION OF SITE UTILITY WORK.

UTILITY SHUTDOWNS

4. ALL UTILITY SHUTDOWNS ON THE COLLEGE OF VETERINARY MEDICINE (CVM) CAMPUS MUST BE COORDINATED IN ADVANCE WITH THE OWNER WITH A MINIMUM 3 WEEK NOTICE.
5. BRIEF (UP TO 8 HOURS) UTILITY OUTAGES OF POWER, CHILLED WATER, STEAM, OR HOT WATER AFFECTING OTHER CVM BUILDINGS SHALL BE SCHEDULED AT NIGHT OR ON WEEKENDS AT NO ADDITIONAL COST TO THE OWNER.
6. IT IS EXPECTED THAT A PROLONGED (MULTI–DAY) INTERRUPTION OF CHILLED WATER SERVICE TO THE EXISTING FINGER BARNS WILL BE REQUIRED AND THIS WORK SHALL TAKE PLACE DURING THE HEATING SEASON. IF A PROLONGED OUTAGE TO STEAM SERVICE IS NECESSARY, THAT WORK SHALL OCCUR DURING THE COOLING SEASON.

GENERAL MECHANICAL NOTES:

1. STEAM AND HOT WATER BRANCH PIPING CONNECTIONS SHALL BE MADE FROM THE TOP OF MAINS. WHERE IT IS NOT FEASIBLE TO TAKE OFF FROM THE TOP OF MAINS, BRANCH PIPES MAY TAKE OFF FROM THE SIDE, BUT IN NO CASE SHALL TAKE OFF FROM THE BOTTOM.
2. ANY PENETRATIONS OF WALLS OR CEILINGS WITHIN THE VIVARIUM SHALL BE SEALED, WHETHER FIRE RATED OR NOT. SEALANT SHALL FILL THE ANNULAR SPACE AROUND PIPE PENETRATIONS, BELOW ESCUTCHEONS, AND FINISHED SMOOTH. SEALANT SHALL BE APPLIED TO PERIMETER OF DIFFUSERS AND GRILLE FRAMES, WITHIN FINISHED AREAS, WITH THE EXCEPTION OF MECHANICAL AND ELECTRICAL ROOMS/PLATFORMS.
3. REFER TO SPECIFICATION SECTION 01 2300, ALTERNATES, AND APPLICABLE SHEET NOTES FOR MECHANICAL ALTERNATES.

MECHANICAL SHEET INDEX

DRAWING	DESCRIPTION
M001	MECHANICAL LEGEND
M010	MECHANICAL UTILITIES - SITE DEMOLITION PLAN and SITE UTILITY NOTES
M015	STEAM SERVICE - SITE PLAN
M020	CHILLED WATER SERVICE - SITE PLAN
M021	SITE CHILLED WATER FLOW DIAGRAM
M101	FLOOR PLAN - MECHANICAL DUCTWORK AND EQUIPMENT
M102	MEZZANINE - MECHANICAL DUCTWORK AND EQUIPMENT
M201	FLOOR PLAN - MECHANICAL PIPING AND CONTROLS
M202	MEZZANINE - MECHANICAL PIPING AND CONTROLS
M401	MECHANICAL SCHEDULES
M501	MECHANICAL DETAILS
M502	MECHANICAL DETAILS
M503	MECHANICAL DETAILS
M601	HVAC CONTROLS LEGEND
M602	HVAC CONTROLS - AIR VALVES WITH HOT WATER REHEAT
M603	HVAC CONTROLS - EXHAUST SYSTEMS
M604	HVAC CONTROLS - FAN COIL UNITS
M605	HVAC CONTROLS - AIR HANDLING UNIT
M606	HVAC CONTROLS - HEATING HOT WATER CONTROLS
M607	HVAC CONTROLS - CHILLED WATER PUMP AND BYPASS
M608	HVAC CONTROLS - SEQUENCES OF CONTROL AND MISCELLANEOUS MONITORING

Wagner Architecture, pllc
92 ELAM COURT
NEW HILL, NORTH CAROLINA 27562
TEL. (919) 612.5050

Kramer Engineering Services, pllc
5517 Cascade Dr Chapel Hill, NC 27514
TEL (919)933-3350
email: donna@kespllc.com
Firm license: P-1099

bennett&pless
formerly LHC STRUCTURAL ENGINEERS

NV5 ENGINEERS AND CONSULTANTS, INC.
3300 REGENCY PARKWAY, STE 100
CARY, NC 27518
P: 919.851.1912 www.NV5.com
NC License # F-1333
formerly CALYX Engineers + Consultants

NORTH CAROLINA PROFESSIONAL SEAL 14917 ENGINEER DONNA D. KRAMER 2023

PREPARED FOR
NORTH CAROLINA STATE UNIVERSITY
COLLEGE OF VETERINARY MEDICINE

TRANSLATIONAL RESEARCH FACILITY

revisions

building number

cadd file number

drawn by EAP

checked by DDK

date ISSUED FOR CONSTRUCTION – 05/18/23

project number

NCSU CODE: 42124
ITEM: 305
WA 202207
SCO#: 21–24030–01A

MECHANICAL LEGEND

sheet number: M001

revision number:

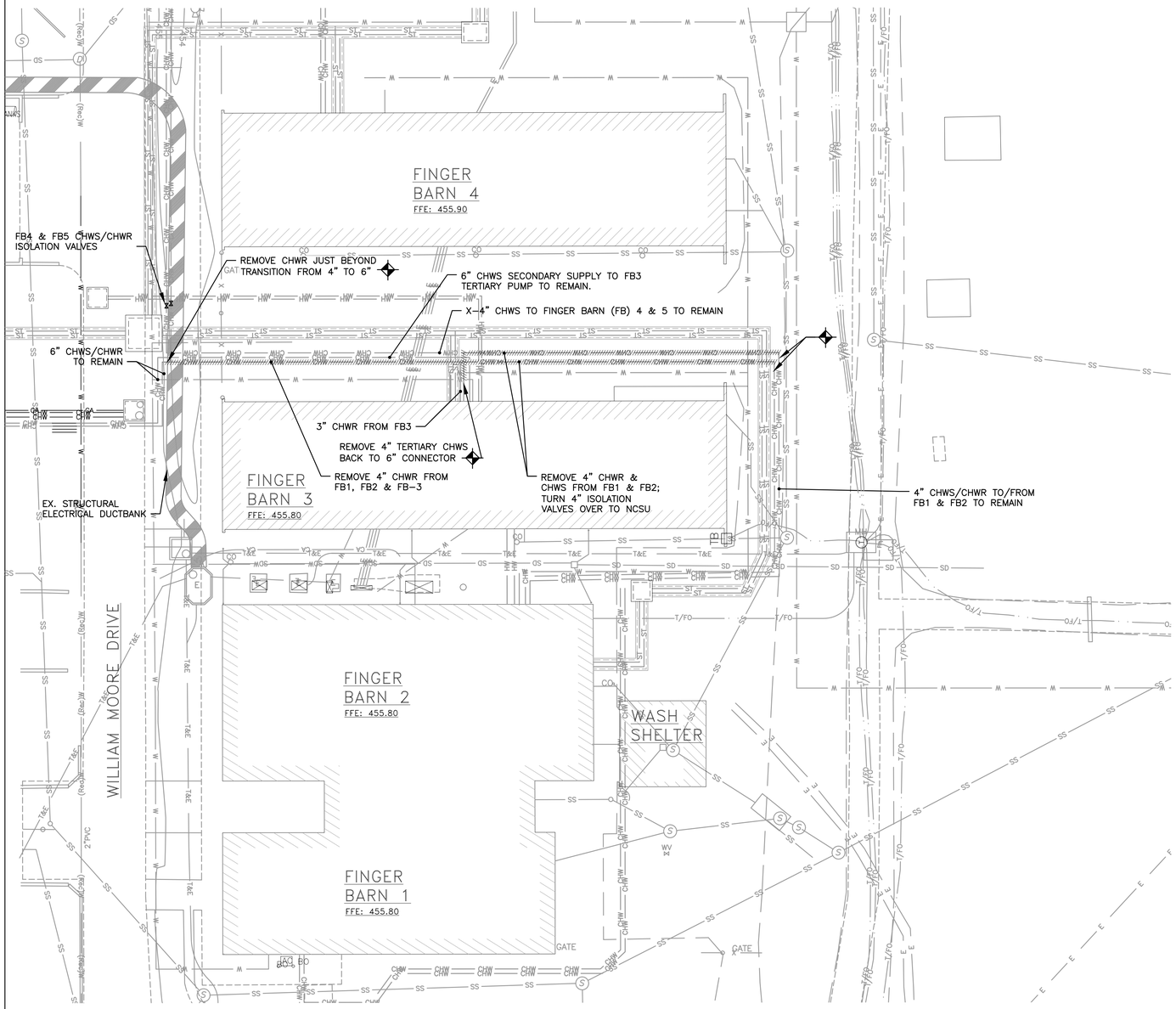

1 M010 MECHANICAL SYSTEM UTILITIES – SITE DEMOLITION PLAN
SCALE: 1"=20'

DRAWING LEGEND

EXISTING CONDITIONS LEGEND

SYMBOL	DESCRIPTION
	EXISTING BUILDING
	EX. CURB AND GUTTER
X	EX. FENCE
	EX. ASPHALT PAVEMENT
	EX. WALL
	EX. CONCRETE SIDEWALK
	EX. INTERMEDIATE CONTOUR
450	EX. INDEX CONTOUR
	EX. TREE
	EX. LIGHT POLE
	EX. STAIRS
CHW CHW	EX. CHILLED WATER SUPPLY OR RETURN
8" HPS ST ST 4" PC	EX. HIGH PRESSURE STEAM & PUMPED CONDENSATE PIPING
HW HW	EX. HEATING HOT WATER SUPPLY OR RETURN
	EX. STEAM MANHOLE
	EX. UTILITY TUNNEL
	EX. MANHOLE
SD	EX. STORM DRAIN
D	EX. STORM DRAIN MANHOLE
	EX. STORM DRAIN YARD INLET
SS	EX. SANITARY SEWER
S	EX. SANITARY SEWER MANHOLE
4-WAY 4" TELECOMM T/FO	EX. TELECOM/ FIBER OPTIC DUCTBANK
T	EX. TELECOMM MANHOLE
4-WAY 6" ELEC. E E	EX. ELECTRIC DUCTBANK
E	EX. ELECTRIC MANHOLE
6" WATER W	EX. WATER PIPING
	EX. WATER VALVE
FH	EX. FIRE HYDRANT
	DEMOLISH PIPE OR DUCTBANK
	REMOVE TO POINT INDICATED

Wagner Architecture, pllc
92 ELAM COURT
NEW HILL, NORTH CAROLINA 27562
TEL. (919) 612.5050

Kramer Engineering Services, pllc
5517 Cascade Dr Chapel Hill, NC 27514
TEL (919)933-3350
email: donna@kespllc.com
Firm license: P-1099

bennett&pless
formerly LHC STRUCTURAL ENGINEERS

NV5
NV5 ENGINEERS AND CONSULTANTS, INC.
3300 REGENCY PARKWAY, STE 100
CARY, NC 27518
P: 919.851.1912 www.NV5.com
NC License # F-1333
formerly CALYN Engineers + Consultants

NORTH CAROLINA PROFESSIONAL SEAL 14917 ENGINEER DONNA D. KRAMER 2023

PREPARED FOR
NORTH CAROLINA STATE UNIVERSITY
COLLEGE OF VETERINARY MEDICINE

TRUE NORTH
PLAN NORTH

TRANSLATIONAL RESEARCH FACILITY

revisions

building number

cadd file number

drawn by EAP

checked by DDK

date ISSUED FOR CONSTRUCTION – 05/18/23

project number
NCSU CODE: 42124
ITEM: 305
WA 202207
SCO#: 21-24030-01A

MECHANICAL UTILITIES - SITE DEMOLITION PLAN and SITE UTILITY NOTES

sheet number M010

revision number

GENERAL NOTES APPLICABLE TO ALL SITE WORK:

1. CONTRACTOR IS RESPONSIBLE FOR LOCATION OF ALL UTILITIES. LOCATIONS SHOWN ARE APPROXIMATE AND TAKEN FROM AVAILABLE RECORDS. CONTRACTOR SHALL BE RESPONSIBLE FOR PROTECTION OF ALL UNDERGROUND UTILITIES. CONTRACTOR SHALL CONTACT ALL LOCAL UTILITY AUTHORITIES, AS REQUIRED, AT LEAST 48 HOURS PRIOR TO ALL EXCAVATION.

2. INFORMATION CONCERNING EXISTING UNDERGROUND UTILITIES WAS OBTAINED FROM AVAILABLE RECORDS. CONTRACTOR IS RESPONSIBLE FOR THE EXACT LOCATION, ELEVATION, AND SIZE OF ALL EXISTING UNDERGROUND UTILITIES OR DUCT BANKS, AT ALL UTILITY CROSSINGS.

3. CONTRACTOR SHALL BE RESPONSIBLE FOR AND IMMEDIATELY NOTIFY THE OWNER UPON ANY OMISSIONS AND/OR ADDITIONS OF UTILITIES FOUND DURING EXCAVATION.

4. CONTRACTOR SHALL TAKE ALL NECESSARY PRECAUTIONS TO PROTECT THE EXISTING UTILITIES. ANY DAMAGE TO EXISTING UTILITIES DURING CONSTRUCTION SHALL BE THE SOLE RESPONSIBILITY OF THE CONTRACTOR AND SHALL NOT RESULT IN ANY EXTRA COST.

5. WHEN WORKING IN AND AROUND THE EXISTING BUILDINGS, EXTREME CARE SHALL BE EXERCISED WITH REGARD TO PROTECTION OF THE EXISTING STRUCTURE AND SERVICES WHICH WILL REMAIN. REPAIR, REPLACE, OR RESTORE TO THE SATISFACTION OF THE OWNER.

6. UPON COMPLETION OF WORK, CONTRACTOR SHALL REMOVE ALL EVIDENCE OF WORK INCLUDING DIRT, ASPHALT, TIRE TRACKS, ETC. AND LEAVE THE SITE IN A CLEAN AND SPOTLESS CONDITION. UPON COMPLETION, CONTRACTOR SHALL SWEEP ASPHALT PAVEMENT AND CONCRETE SIDEWALK, AND LEAVE THE SITE IN A NEAT AND ORDERLY CONDITION.

7. CONTRACTOR SHALL TOP SOIL, SEED AND MULCH ALL DISTURBED AREAS NOT ASPHALT, GRAVEL, OR CONCRETE.

8. CONTRACTOR SHALL BE REQUIRED TO RESTORE ALL PAVEMENTS, CURBS, GUTTERS, SIDEWALKS, SIGNS, AND PAVEMENT STRIPING TO THEIR ORIGINAL PRE CONSTRUCTION CONDITION FOR ALL DISTURBED AREAS.

9. SEE DRAWING A000 FOR STAGING & LAYDOWN AREAS.

10. ALL UTILITY OUTAGES ON THE CVM CAMPUS SHALL BE SCHEDULED AND COORDINATED IN ADVANCE. IN GENERAL, UTILITY OUTAGES WILL NEED TO OCCUR DURING NIGHTS AND WEEKENDS.
a. THE EXTENT OF CHILLED WATER WORK IS SUCH THAT IT IS EXPECTED THAT THE DEMOLITION AND NEW WORK IMPACTING THE FINGER BARNS WILL BE REQUIRED TO TAKE PLACE DURING THE COLDEST WEATHER AND WILL RESULT IN A MULTI-WEEK SHUT-DOWN.
b. THE EXTENT OF STEAM AND CONDENSATE WORK IS SUCH THAT IT IS EXPECTED THAT THE DEMOLITION AND NEW WORK IMPACTING THE FINGER BARNS WILL BE REQUIRED TO TAKE PLACE DURING THE WARMEST WEATHER AND WILL RESULT IN A MULTI-DAY SHUT-DOWN.

12. WORK IN THIS AREA THAT IS EXCESSIVELY NOISY MUST BE COORDINATED WITH CVM PERSONNEL.

13. EXCAVATION: ENSURE ALL EXCAVATIONS ARE DONE IN COMPLIANCE WITH 29CFR1926, SUBPART P, INCLUDING PROTECTION FROM LOADS DUE TO CONSTRUCTION EQUIPMENT AND VEHICLE TRAFFIC.
a. CONTRACTORS' EXCAVATION COMPETENT PERSONNEL SHALL DOCUMENT DAILY EXCAVATION INSPECTIONS.
b. AN EXCAVATION SAFETY PLAN SHALL BE SUBMITTED FOR REVIEW.

14. AUTHORIZED OWNER'S PERSONNEL MUST BE ABLE TO ACCESS EXISTING MECHANICAL ROOMS AT ALL TIMES IN ORDER TO SERVICE EQUIPMENT OR RESPOND TO EMERGENCIES. OF PARTICULAR CONCERN IS MAINTAINING ACCESS TO FINGER BARN 3 MECHANICAL ROOM WHILE CHILLED WATER PIPING EXTENSIONS ARE COMPLETED.

15. COORDINATE WITH OWNER FOR ISOLATION OF CHILLED WATER AND STEAM. CONTRACTOR SHALL PROVIDE LOCKS ON UPSTREAM VALVES AS NEEDED TO MAINTAIN SAFETY.

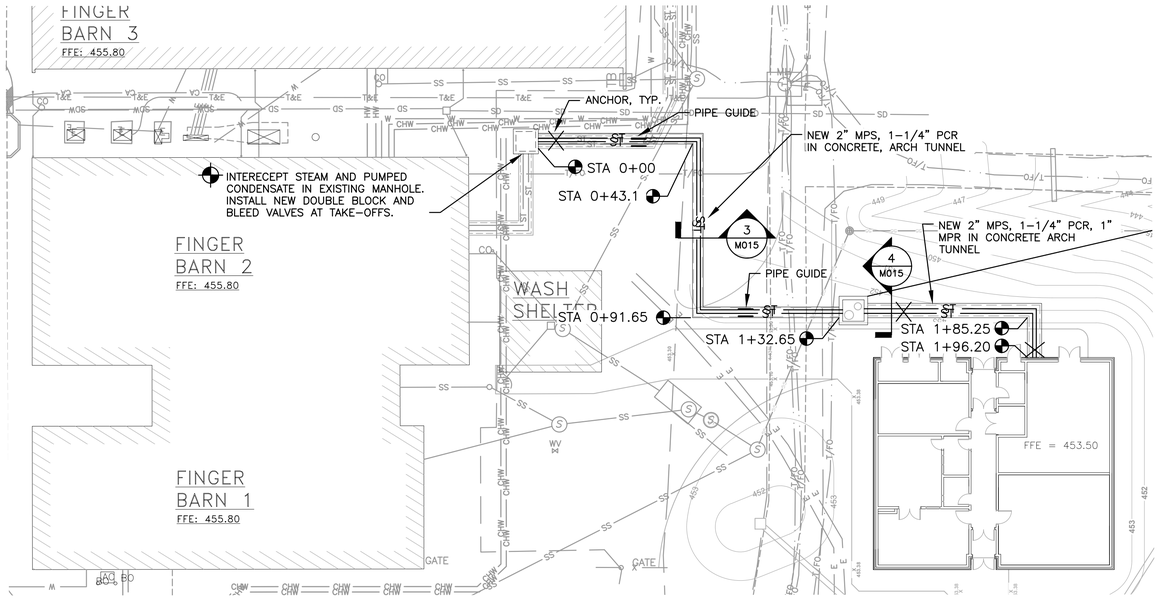

NOTES:
1. REFER TO STRUCTURAL DETAILS ON SHEET S201 FOR CONNECTION OF STEAM TUNNEL AT MECHANICAL ROOM PIT. SEAL OPENING BETWEEN STEAM TUNNEL AND FOUNDATION WALL TO PREVENT EXCESS HEAT FROM ENTERING THE MECHANICAL ROOM.
2. REFER TO GENERAL NOTES ON SHEET M010 FOR INFORMATION ABOUT UTILITY SHUTDOWNS, ACCESS TO EXISTING MECHANICAL ROOMS, COORDINATION, ETC.

1 M015 STEAM SERVICE SITE PLAN
SCALE: 1"=20'-0"

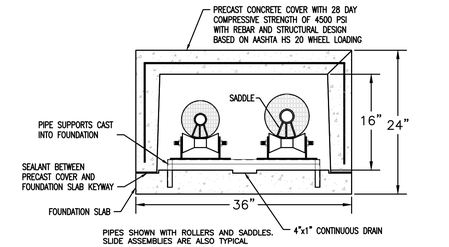

3 M015 TUNNEL SECTION
SCALE: 1"=1'0"

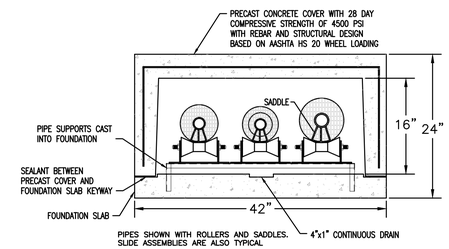

4 M015 TUNNEL SECTION
SCALE: 1" = 1'0"

SITE LEGEND

NEW WORK

SYMBOL	DESCRIPTION
4-WAY 4" TELECOMM T/FO	EX. TELECOM/ FIBER OPTIC DUCTBANK
T	EX. TELECOMM MANHOLE
4-WAY 6" ELEC. E E	EX. ELECTRIC DUCTBANK
E	EX. ELECTRIC MANHOLE
CHW	NEW CHILLED WATER SUPPLY OR RETURN
⊗	WATER VALVE
	NEW ARCH TUNNEL
ST	NEW HIGH PRESSURE STEAM OR PUMPED CONDENSATE RETURN
✥	CONNECT TO POINT INDICATED
E	NEW ELECTRIC SERVICE IN CONCRETE DUCTBANK
T	NEW TELECOM SERVICE IN CONCRETE DUCTBANK
◐	PROFILE STATION ID

Wagner Architecture, pllc
92 ELAM COURT
NEW HILL, NORTH CAROLINA 27562
TEL. (919) 612.5050

Kramer Engineering Services, pllc
5517 Cascade Dr Chapel Hill, NC 27514
TEL (919)933-3350
email: donna@kespllc.com
Firm license: P-1099

bennett&pless
formerly LHC STRUCTURAL ENGINEERS

NV5
NV5 ENGINEERS AND CONSULTANTS, INC.
3300 REGENCY PARKWAY, STE 100
CARY, NC 27518
P: 919.851.1912 www.NV5.com
NC License # F-1333
formerly CALYN Engineers + Consultants

NORTH CAROLINA PROFESSIONAL SEAL 14917 ENGINEER DONNA D. KRAMER 3/24/2023

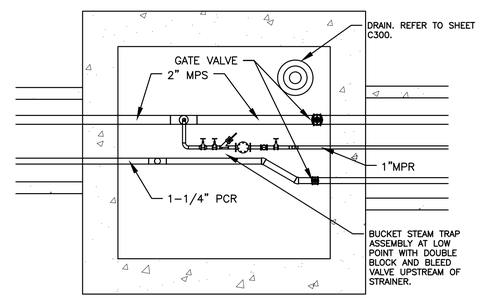

5 M015 MANHOLE PLAN
SCALE: 1/2" = 1'0"

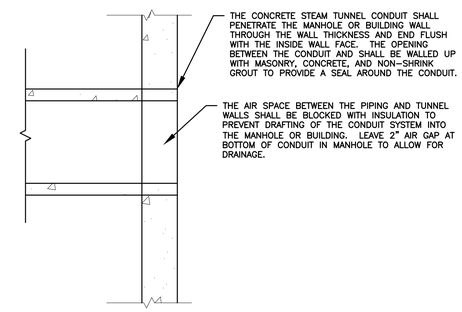

6 M015 TUNNEL PENETRATION OF MANHOLE OR BUILDING
SCALE: 1/2" = 1'0"

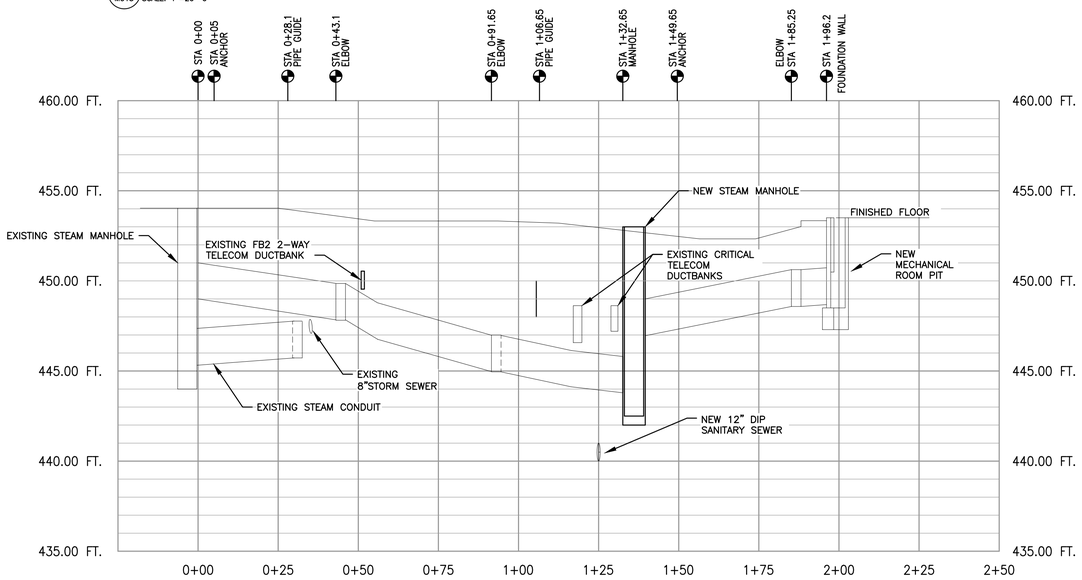

NOTE: LOCATIONS OF EXISTING BURIED UTILITIES ARE APPROXIMATE, BASED ON POTHOLE TEST DATA AND SURVEYS PROVIDED BY OTHERS. CONTRACTOR SHALL LOCATE AND PROTECT EXISTING UNDERGROUND INFRASTRUCTURE.

2 M015 STEAM CONDUIT PROFILE
SCALE: AS INDICATED

PIPE ANCHOR SCHEDULE

D	P	C	N	S	BOLT PATTERN
IN	IN	IN	IN	IN	
$2\frac{1}{2}$"	$\frac{3}{8}$"	$\frac{3}{8}$"	4"	$\frac{5}{8}$"	
2"	$\frac{3}{8}$"	$\frac{3}{8}$"	4"	$\frac{5}{8}$"	
1"–$1\frac{1}{2}$"	$\frac{3}{8}$"	$\frac{1}{4}$"	4"	$\frac{1}{2}$"	

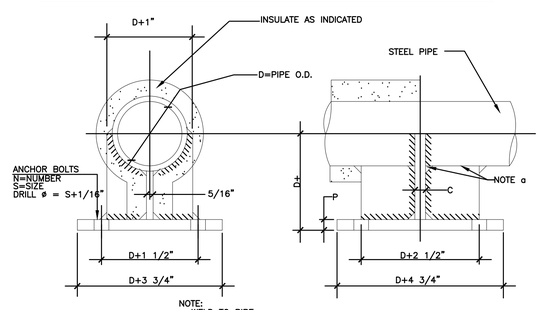

7 M015 SMALL PIPE ANCHOR
SCALE: NONE

PREPARED FOR
NORTH CAROLINA STATE UNIVERSITY
COLLEGE OF VETERINARY MEDICINE

TRUE NORTH
PLAN NORTH

TRANSLATIONAL RESEARCH FACILITY

revisions

building number

cadd file number

drawn by EAP

checked by DDK

date ISSUED FOR CONSTRUCTION – 05/18/23

project number

NCSU CODE: 42124
ITEM: 305
WA 202207
SCO#: 21-24030-01A

STEAM SERVICE - SITE PLAN

sheet number: M015

revision number:

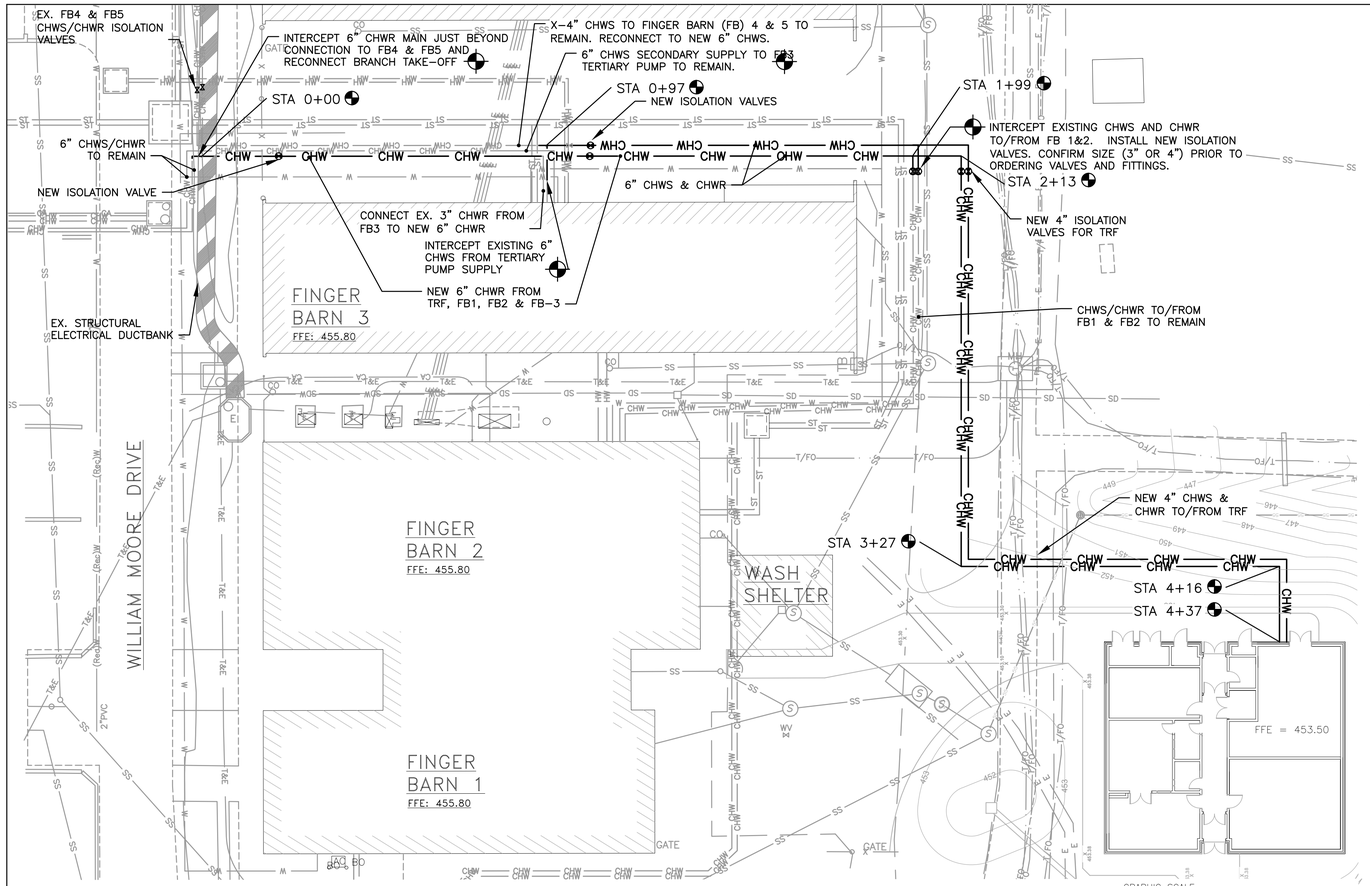

NOTES:
1. REFER TO GENERAL NOTES ON SHEET M010 FOR INFORMATION ABOUT UTILITY SHUTDOWNS, ACCESS TO EXISTING MECHANICAL ROOMS, COORDINATION, ETC.

1 M020 CHILLED WATER SERVICE SITE PLAN
SCALE: 1"=20'-0"

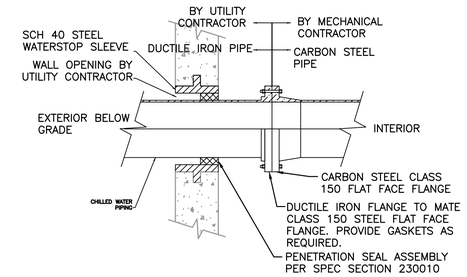

3 M020 CHILLED WATER PIPE PENETRATION DETAIL AT WALL
NO SCALE

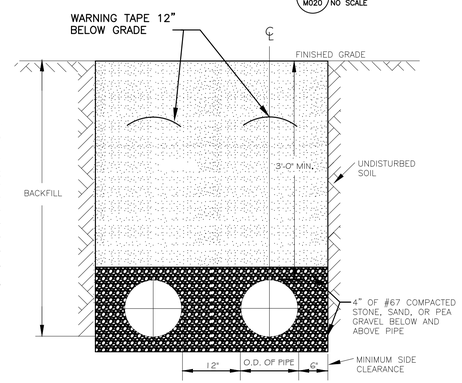

NOTES:
1. TRENCHES REQUIRING SHORING AND BRACING, DIMENSIONS SHALL BE TAKEN FROM THE INSIDE FACE OF THE SHORING AND BRACING.
2. NO ROCKS OR BOULDERS 4" OR LARGER TO BE USED IN BACKFILL.
3. ALL BACKFILL MATERIAL SHALL BE SUITABLE NATIVE MATERIAL.
4. BACKFILL SHALL BE TAMPED IN 6" LIFTS.
5. ACHIEVE 95% COMPACTION IN BACKFILL.

4 M020 CHILLED WATER PIPE TRENCH SECTION
NO SCALE

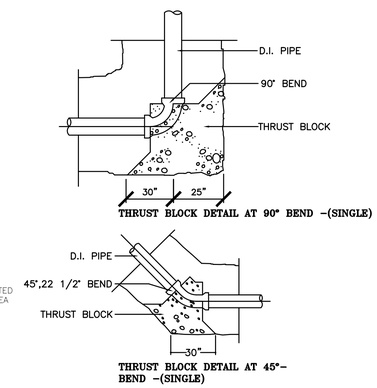

5 M020 THRUST BLOCK DETAILS
NO SCALE

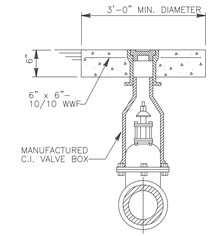

NOTE: "CHW" CAST INTO CENTER OF CAST IRON CAP OR CONCRETE LID.

6 M020 CHILLED WATER VALVE BOX DETAIL
NO SCALE

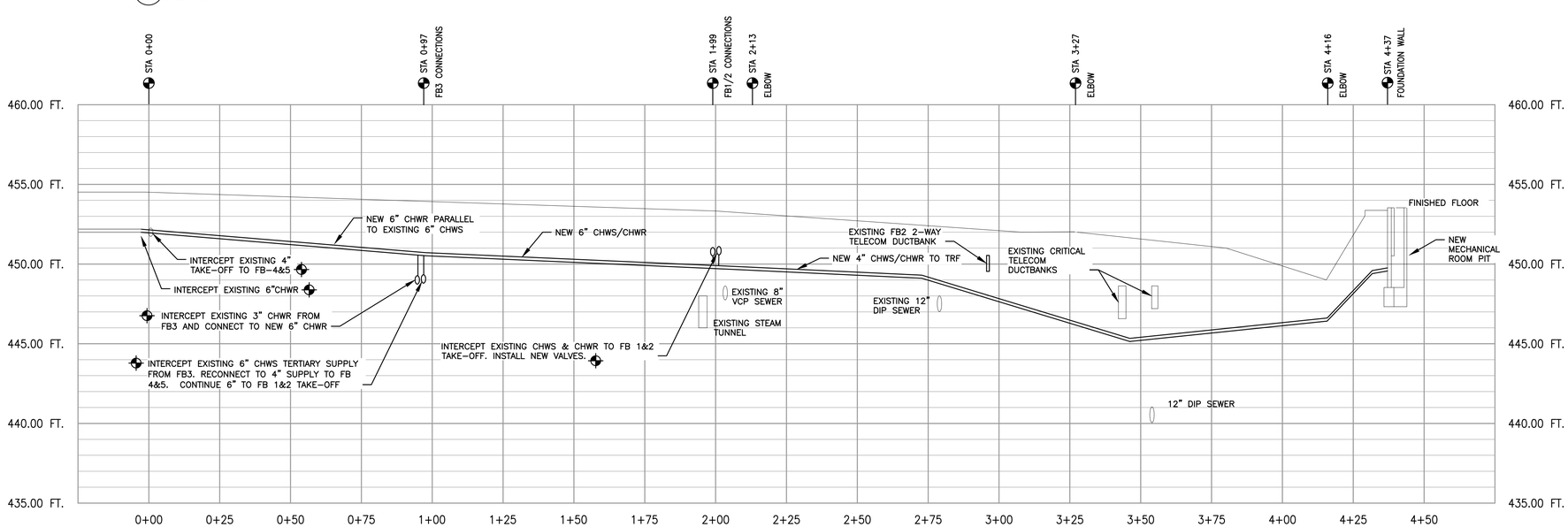

NOTE: LOCATIONS OF EXISTING BURIED UTILITIES ARE APPROXIMATE, BASED ON POTHOLE TEST DATA AND SURVEYS PROVIDED BY OTHERS. CONTRACTOR SHALL LOCATE AND PROTECT EXISTING UNDERGROUND INFRASTRUCTURE.

2 M020 CHILLED WATER PIPING PROFILE
SCALE: AS INDICATED

Wagner Architecture, pllc
92 ELAM COURT
NEW HILL, NORTH CAROLINA 27562
TEL. (919) 612.5050

Kramer Engineering Services, pllc
5517 Cascade Dr Chapel Hill, NC 27514
TEL (919)933-3350
email: donna@kespllc.com
Firm license: P-1099

bennett&pless
formerly LHC STRUCTURAL ENGINEERS

NV5 ENGINEERS AND CONSULTANTS, INC.
3300 REGENCY PARKWAY, STE 100
CARY, NC 27518
P: 919.851.1912 www.NV5.com
NC License # F-1333
formerly CALYN Engineers + Consultants

NORTH CAROLINA PROFESSIONAL SEAL 14917 ENGINEER DONNA D. KRAMER 2023

PREPARED FOR
NORTH CAROLINA STATE UNIVERSITY
COLLEGE OF VETERINARY MEDICINE

TRUE NORTH
PLAN NORTH

TRANSLATIONAL RESEARCH FACILITY

revisions

building number

cadd file number

drawn by EAP

checked by DDK

date ISSUED FOR CONSTRUCTION – 05/18/23

project number
NCSU CODE: 42124
ITEM: 305
WA 202207
SCO#: 21-24030-01A

CHILLED WATER SERVICE - SITE PLAN

sheet number: M020

revision number:

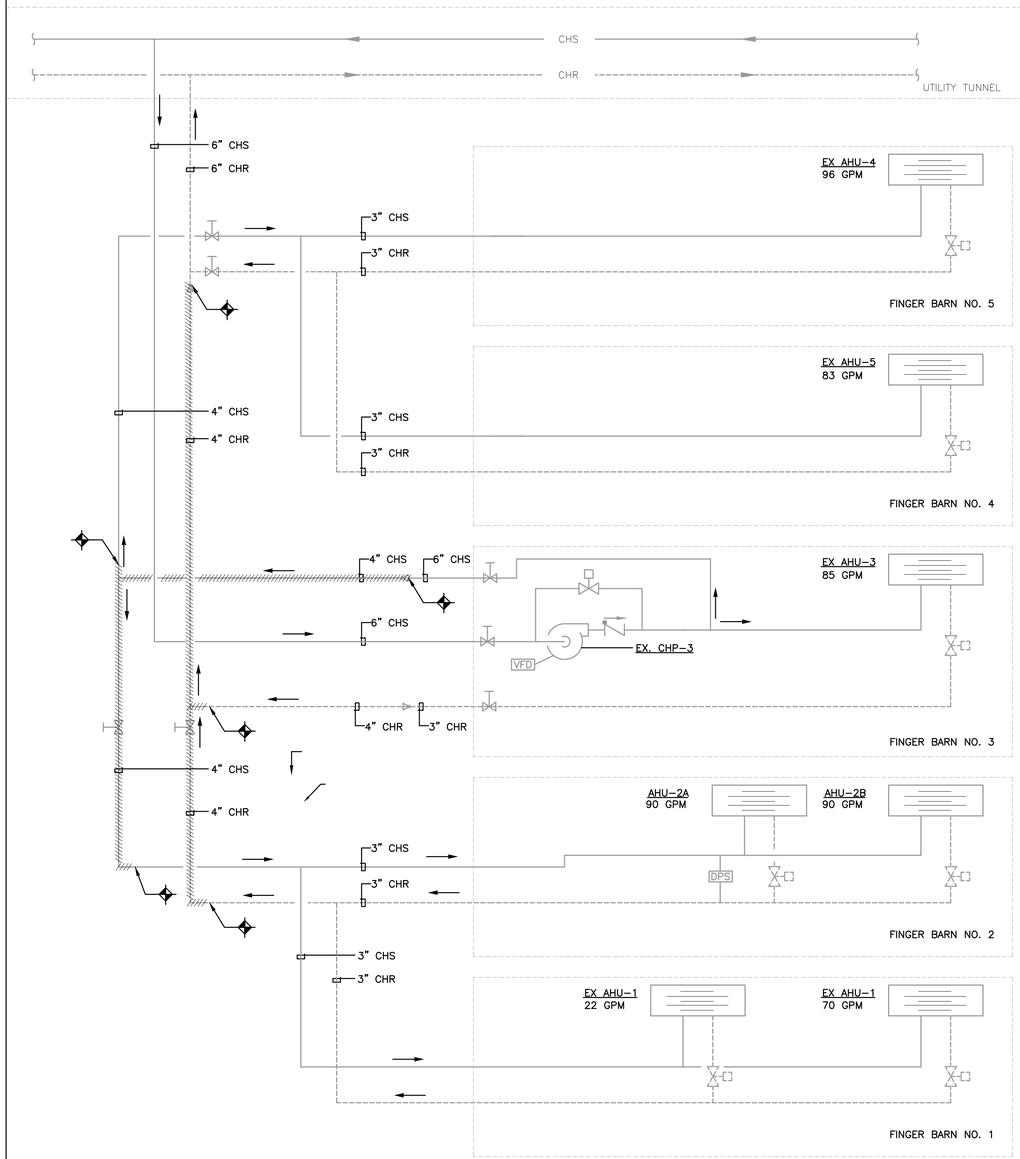

1 M021 CHILLED WATER SCHEMATIC DIAGRAM – DEMOLITION
NO SCALE

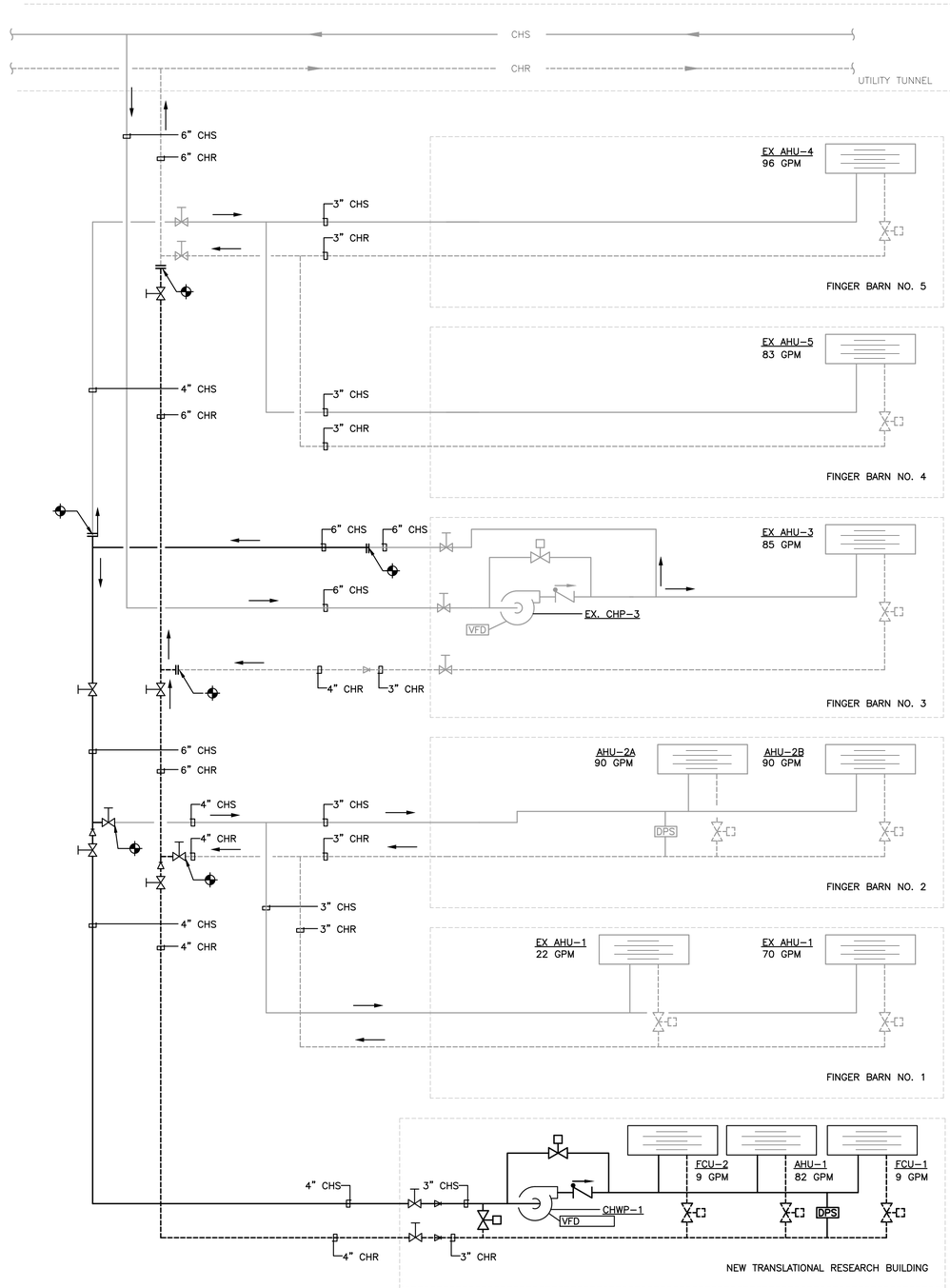

2 M021 CHILLED WATER SCHEMATIC DIAGRAM – NEW WORK
NO SCALE

Wagner Architecture, pllc
92 ELAM COURT
NEW HILL, NORTH CAROLINA 27562
TEL. (919) 612.5050

Kramer Engineering Services, pllc
5517 Cascade Dr Chapel Hill, NC 27514
TEL (919)933-3350
email: donna@kespllc.com
Firm license: P-1099

bennett&pless
formerly LHC STRUCTURAL ENGINEERS

NV5
NV5 ENGINEERS AND CONSULTANTS, INC.
3300 REGENCY PARKWAY, STE 100
CARY, NC 27518
P: 919.851.1912 www.NV5.com
NC License #F-1313
formerly CALYX Engineers + Consultants

NORTH CAROLINA PROFESSIONAL SEAL 14917 ENGINEER DONNA D. KRAMER 2023

PREPARED FOR
NORTH CAROLINA
STATE UNIVERSITY
COLLEGE OF VETERINARY
MEDICINE

TRANSLATIONAL RESEARCH FACILITY

revisions

building number

cadd file number

drawn by EAP

checked by DDK

date ISSUED FOR CONSTRUCTION – 05/18/23

project number
NCSU CODE: 42124
ITEM: 305
WA 202207
SCO#: 21–24030–01A

SITE CHILLED WATER FLOW DIAGRAM

sheet number: M021

revision number:

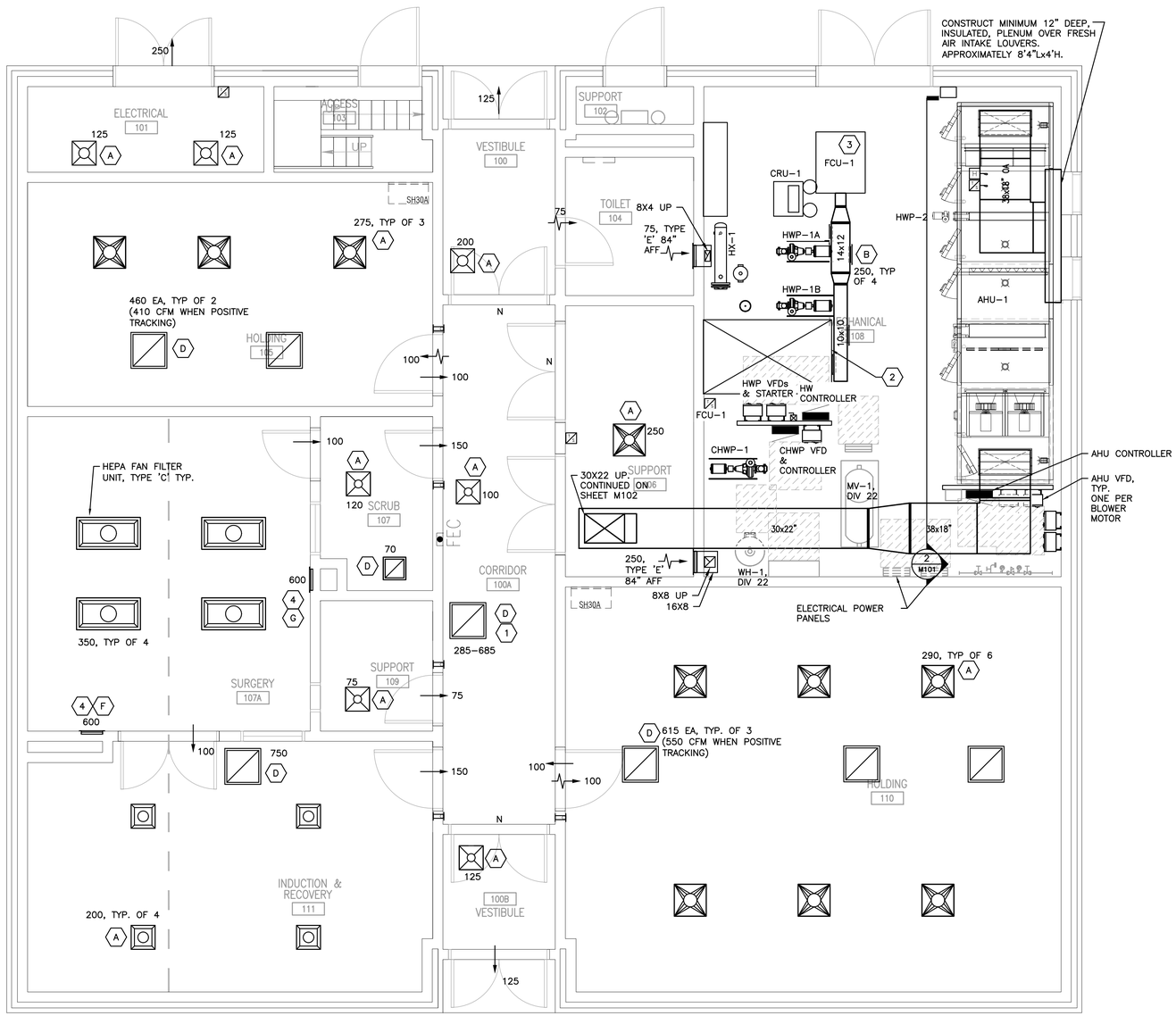

1 M101 FLOOR PLAN – MECHANICAL EQUIPMENT AND DUCTWORK
SCALE: 1/4" = 1'0"

AHU SECTIONS

(A) INLET SECTION OPENING H"XW": 18" X 38" CD50	(E) HUMIDIFIER SECTION
(B) COMBINED FILTER SECTION PRE FILTER DEPTH: 2" FINAL FILTER DEPTH: 12" FRAME MATERIAL: GALV QTY H"XW": 8 24"X24" QTY H"XW": 4 24"X12"	(F) CHILLED WATER COIL NUMBER OF COILS: 2
(C) ACCESS SECTION	(G) FAN SECTION QTY: 4 MOTOR POWER: 5.00 BHP
(D) HOT WATER COIL NUMBER OF COILS: 1	(H) OUTLET SECTION OPENING H"XW": 18" X 38"

ACCESS DOORS: 24.00" X 58.00" TYP.

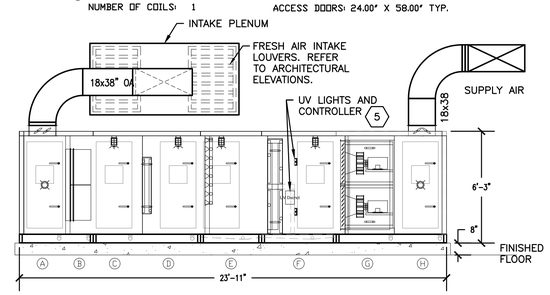

2 M101 SECTION AT AHU
SCALE: 1/4" = 1'0"

SHEET KEYED NOTES

1. EXHAUST SETPOINT IN CORRIDOR SHALL VARY, DEPENDING ON WHETHER HOLDING ROOMS ARE SET TO 'POSITIVE' OR 'NEGATIVE.' INITIAL START-UP SHALL HAVE HOLDING ROOMS SET TO NEGATIVE DIFFERENTIAL AIRFLOW AND CORRIDOR EXHAUST SETPOINT SHALL BE 285 CFM. FOR EACH ROOM THAT IS SWITCHED FROM NEGATIVE TO POSITIVE, CORRIDOR EXHAUST SETPOINT SHALL INCREASE BY 200 CFM TO MATCH THE CHANGE IN DIFFERENTIAL CFM OF THE ROOM.
2. MAINTAIN AREA CLEAR OF EQUIPMENT TO ALLOW FOR REMOVAL OR REPLACEMENT OF EQUIPMENT ON EQUIPMENT PLATFORM. REFER TO SHEET M102.
3. INSTALL FAN COIL UNIT AT ~9'0"AFF TO PROVIDE FULL ACCESS CLEARANCE ABOVE DOORS.
4. INSTALL BOTTOM OF GRILLE 12"-18" AFF.
5. UNDER ADD ALTERNATE #13 INCLUDE UV DISINFECTION LIGHTS AND CONTROLLER PER SPECIFICATION SECTION 23600.

GENERAL SHEET NOTES

1. ALL DIFFUSERS SHALL BE TYPE 'A' UNLESS OTHERWISE NOTED. ALL EXHAUST GRILLES SHALL BE TYPE 'D' UNLESS OTHERWISE NOTED.
2. ALL SUPPLY AND FRESH AIR INTAKE DUCTWORK SHALL BE TYPE G90 GALVANIZED STEEL. REFER TO SHEET M102 FOR EXHAUST AIR DUCTWORK.
3. AIR BALANCE SHALL BE COMPLETED TO WITHIN +/- 5% OF SETPOINT.
4. ALL FLOOR MOUNTED EQUIPMENT SHALL BE SET ON MINIMUM 4"H CONCRETE EQUIPMENT PADS INCLUDING PUMPS, TANKS, AND CHEMICAL SHOT FEEDERS. AHU SHALL BE SET ON 8"H PAD. REFER TO STRUCTURAL PLANS AND DETAILS.
5. REFER TO ARCHITECT'S REFLECTED CEILING PLAN FOR EXACT LOCATION OF CEILING DIFFUSERS AND GRILLES.
6. REFER TO SHEET M401, AIR VALVE AND REHEAT COIL SCHEDULE FOR REQUIRED AND ACTUAL AIR CHANGE RATES.

Wagner Architecture, pllc
92 ELAM COURT
NEW HILL, NORTH CAROLINA 27562
TEL. (919) 612.5050

Kramer Engineering Services, pllc
5517 Cascade Dr Chapel Hill, NC 27514
TEL (919)933-3350
email: donna@kespllc.com
Firm license: P-1099

bennett&pless
formerly LHC STRUCTURAL ENGINEERS

NV5
NV5 ENGINEERS AND CONSULTANTS, INC.
3300 REGENCY PARKWAY, STE 100
CARY, NC 27518
P: 919.851.1912 www.NV5.com
NC License # F-1333
formerly CALYX Engineers + Consultants

NORTH CAROLINA PROFESSIONAL SEAL 14917 ENGINEER DONNA D. KRAMER
2023

PREPARED FOR
NORTH CAROLINA STATE UNIVERSITY
COLLEGE OF VETERINARY MEDICINE

0 2' 4' 8'
SCALE: 1/4" = 1'-0"

TRUE NORTH
PLAN NORTH

TRANSLATIONAL RESEARCH FACILITY

revisions

building number
cadd file number
drawn by EAP
checked by DDK
date ISSUED FOR CONSTRUCTION – 05/18/23
project number
NCSU CODE: 42124
ITEM: 305
WA 202207
SCO#: 21-24030-01A

FLOOR PLAN-
MECHANICAL EQUIPMENT
AND DUCTWORK

sheet number: M101
revision number:

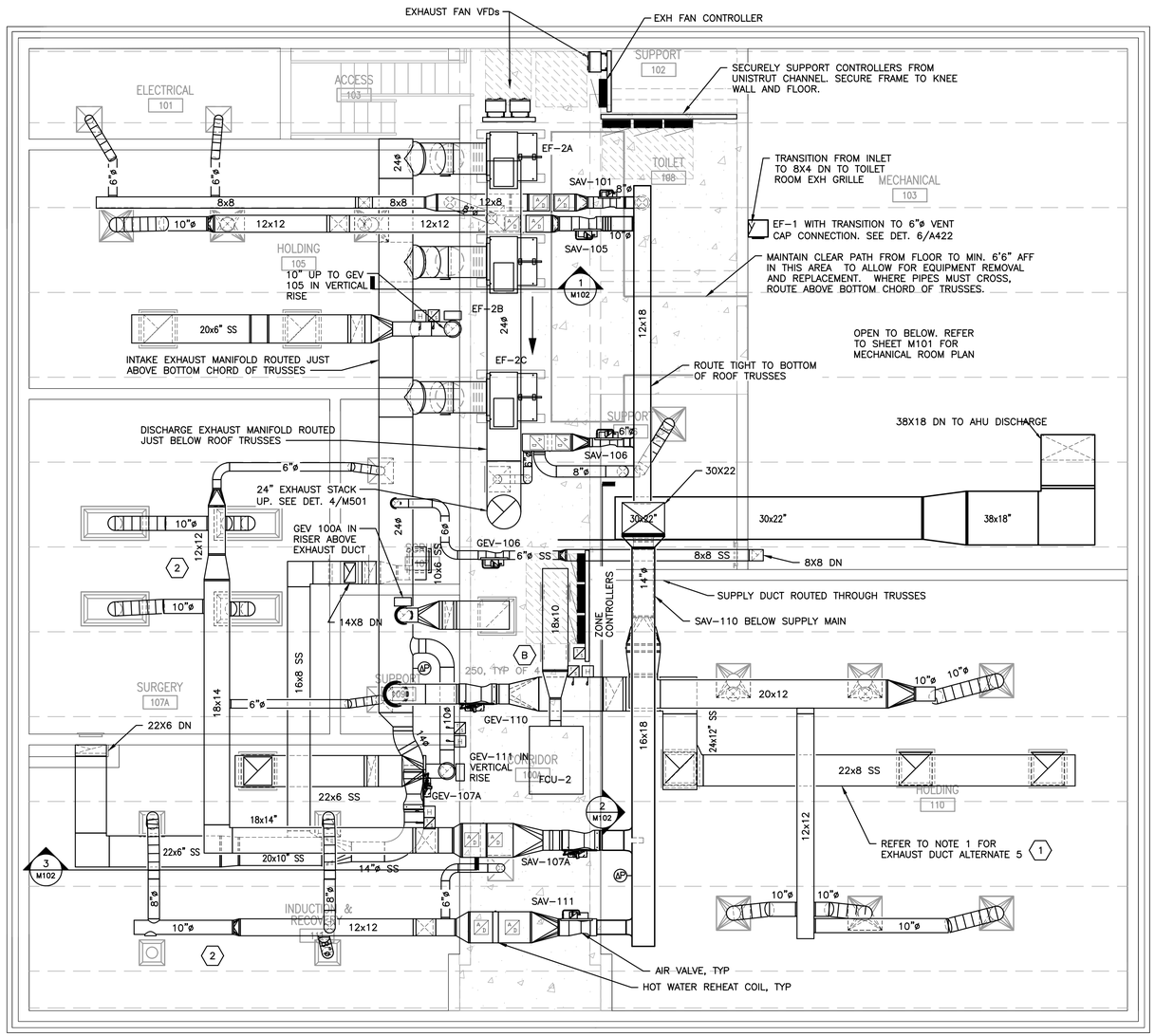

1 M102 EQUIPMENT PLATFORM – MECHANICAL DUCTWORK AND EQUIPMENT
SCALE: 1/4" = 1'0"

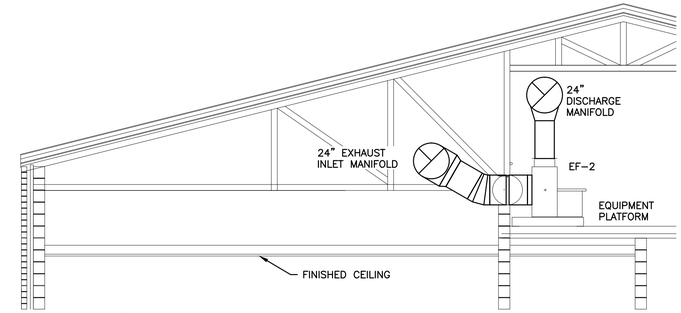

1 M102 SECTION
SCALE: 1/4" = 1'0"

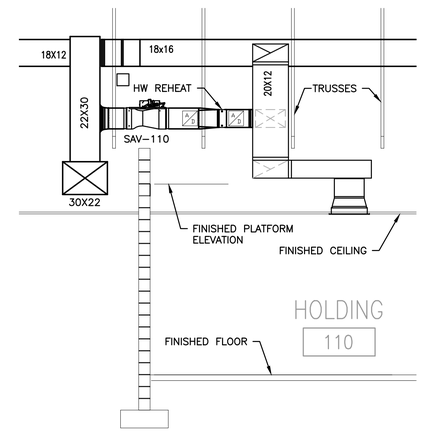

2 M102 SECTION
SCALE: 1/4" = 1'0"

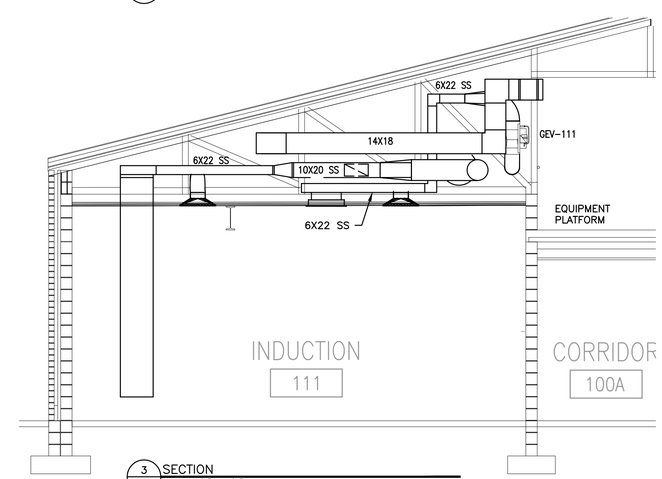

3 M102 SECTION
SCALE: 1/4" = 1'0"

SHEET KEYED NOTES

1. BASE BID:EXHAUST DUCTWORK FROM EXHAUST GRILLES THROUGH AIR VALVES SHALL BE TYPE 304 STAINLESS STEEL. EXHAUST DUCT FROM AIR VALVE THROUGH EXHAUST FANS TO CONNECTION TO EXHAUST STACK SHALL BE G90 GALVANIZED STEEL. EXHAUST STACK, FROM BASE THROUGH ROOF SHALL BE TYPE 316 STAINLESS STEEL.

   UNDER ADD ALTERNATE NO 5, ALL EXHAUST DUCT SHALL BE TYPE 316 STAINLESS STEEL.

   ACCESS DOORS, DAMPERS, AND OTHER DUCT ACCESSORIES SHALL MATCH DUCT MATERIAL.

2. DUCTWORK ABOVE INDUCTION/RECOVERY AND SURGERY ROOMS SHALL BE ROUTED ENTIRELY BETWEEN AND THROUGH TRUSSES. CEILINGS ARE 12'0"AFF TO ACCOMMODATE A HOIST.

SHEET GENERAL NOTES

1. LOCATE AIR VALVES, SENSORS, REHEAT COILS, AND OTHER DUCT MOUNTED DEVICES SUCH THAT THEY WILL BE SERVICEABLE FROM THE PLATFORM.

Wagner Architecture, pllc
92 ELAM COURT
NEW HILL, NORTH CAROLINA 27562
TEL. (919) 612.5050

Kramer Engineering Services, pllc
5517 Cascade Dr Chapel Hill, NC 27514
TEL (919)933-3350
email: donna@kespllc.com
Firm license: P-1099

bennett&pless
formerly LHC STRUCTURAL ENGINEERS

NV5
NV5 ENGINEERS AND CONSULTANTS, INC.
3300 REGENCY PARKWAY, STE 100
CARY, NC 27518
P: 919.851.1912 www.NV5.com
NC License # F-1333
formerly CALYX Engineers + Consultants

NORTH CAROLINA PROFESSIONAL SEAL 14917 ENGINEER DONNA D. KRAMER 2023

PREPARED FOR
NORTH CAROLINA STATE UNIVERSITY
COLLEGE OF VETERINARY MEDICINE

0 2' 4' 8'
SCALE: 1/4" = 1'-0"

TRUE NORTH
PLAN NORTH

TRANSLATIONAL RESEARCH FACILITY

revisions

building number

cadd file number

drawn by EAP

checked by DDK

date ISSUED FOR CONSTRUCTION – 05/18/23

project number
NCSU CODE: 42124
ITEM: 305
WA 202207
SCO#: 21–24030–01A

EQUIPMENT PLATFORM - MECHANICAL DUCTWORK AND EQUIPMENT

sheet number: M102

revision number:

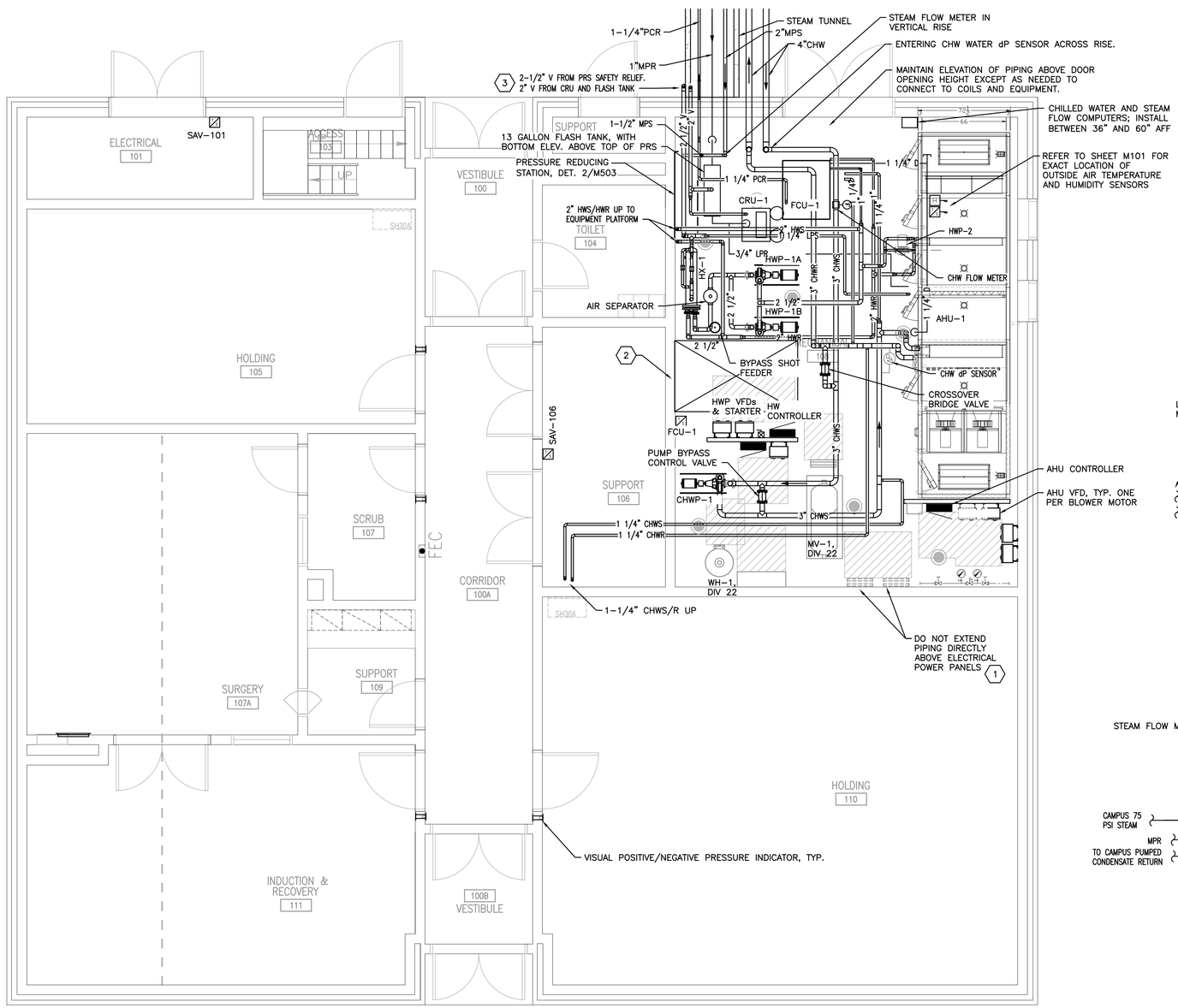

1 M201 FLOOR PLAN – MECHANICAL PIPING AND CONTROLS
SCALE: 1/4" = 1'0"

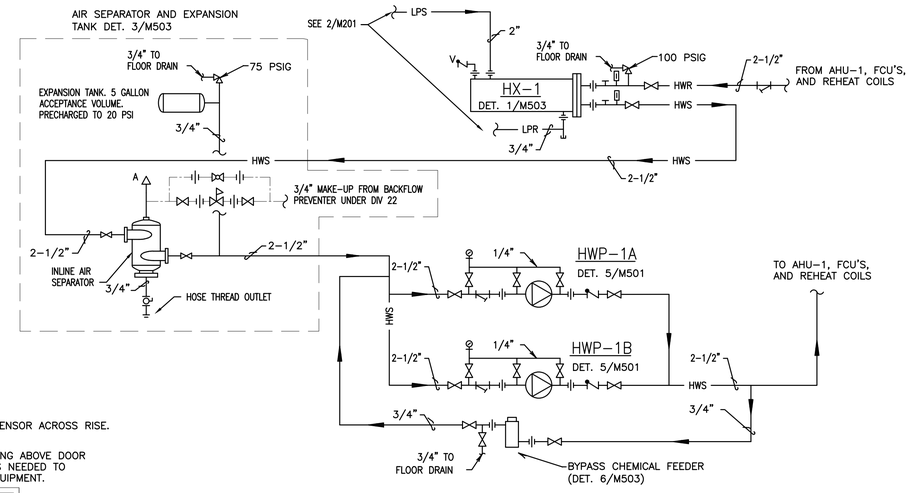

NOTE: REFER TO CONTROL DRAWINGS FOR ADDITIONAL SENSORS

2 M201 HEATING WATER FLOW SCHEMATIC
NO SCALE

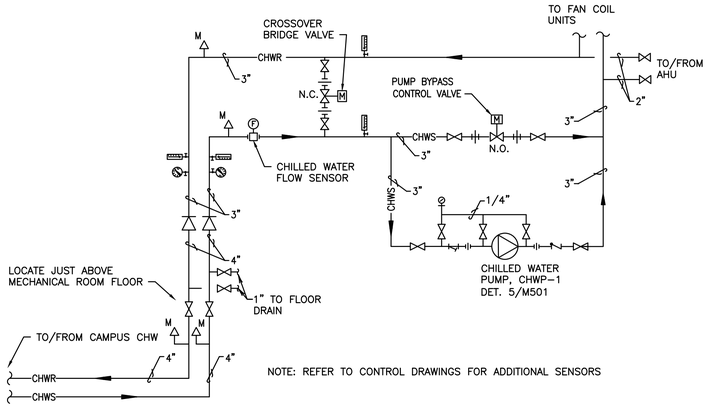

NOTE: REFER TO CONTROL DRAWINGS FOR ADDITIONAL SENSORS

3 M201 CHILLED WATER FLOW SCHEMATIC
NO SCALE

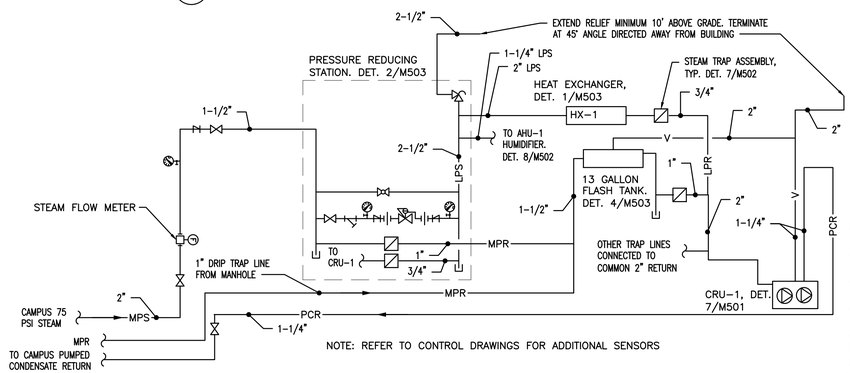

NOTE: REFER TO CONTROL DRAWINGS FOR ADDITIONAL SENSORS

4 M201 STEAM FLOW SCHEMATIC
NO SCALE

SHEET KEYED NOTES

1. DO NOT INSTALL PIPING OR ANY DEVICES OR EQUIPMENT DIRECTLY ABOVE ELECTRICAL POWER PANELS. MAINTAIN A 30"WX36"DX6'6"H WORKING CLEARANCE IN FRONT OF ALL PANELS, VARIABLE SPEED DRIVES, CONTROL PANELS, DISCONNECTS, AND STARTERS.
2. MAINTAIN CLEAR AREA IN THIS VICINITY TO ALLOW FOR REMOVAL AND REPLACEMENT OF EQUIPMENT ON PLATFORM, ABOVE.
3. EXTEND RELIEF A MINIMUM OF 10 FT ABOVE GRADE, TURN UP AND ANGLE AT 45°, DIRECTEWD AWAY FROM BUILDING.

Wagner Architecture, pllc
92 ELAM COURT
NEW HILL, NORTH CAROLINA 27562
TEL. (919) 612.5050

Kramer Engineering Services, pllc
5517 Cascade Dr Chapel Hill, NC 27514
TEL (919)933-3350
email: donna@kespllc.com
Firm license: P-1099

bennett&pless
formerly LHC STRUCTURAL ENGINEERS

NV5 ENGINEERS AND CONSULTANTS, INC.
3300 REGENCY PARKWAY, STE 100
CARY, NC 27518
P: 919.851.1912 www.NV5.com
NC License # F-1333
formerly CALYX Engineers + Consultants

NORTH CAROLINA PROFESSIONAL SEAL 14917 ENGINEER DONNA D. KRAMER 2023

PREPARED FOR
NORTH CAROLINA STATE UNIVERSITY
COLLEGE OF VETERINARY MEDICINE

0 2' 4' 8'
SCALE: 1/4" = 1'-0"

TRUE NORTH
PLAN NORTH

TRANSLATIONAL RESEARCH FACILITY

revisions

building number

cadd file number

drawn by: EAP

checked by: DDK

date: ISSUED FOR CONSTRUCTION – 05/18/23

project number: NCSU CODE: 42124 ITEM: 305 WA 202207 SCO#: 21-24030-01A

FLOOR PLAN- MECHANICAL PIPING AND CONTROLS

sheet number: M201

revision number:

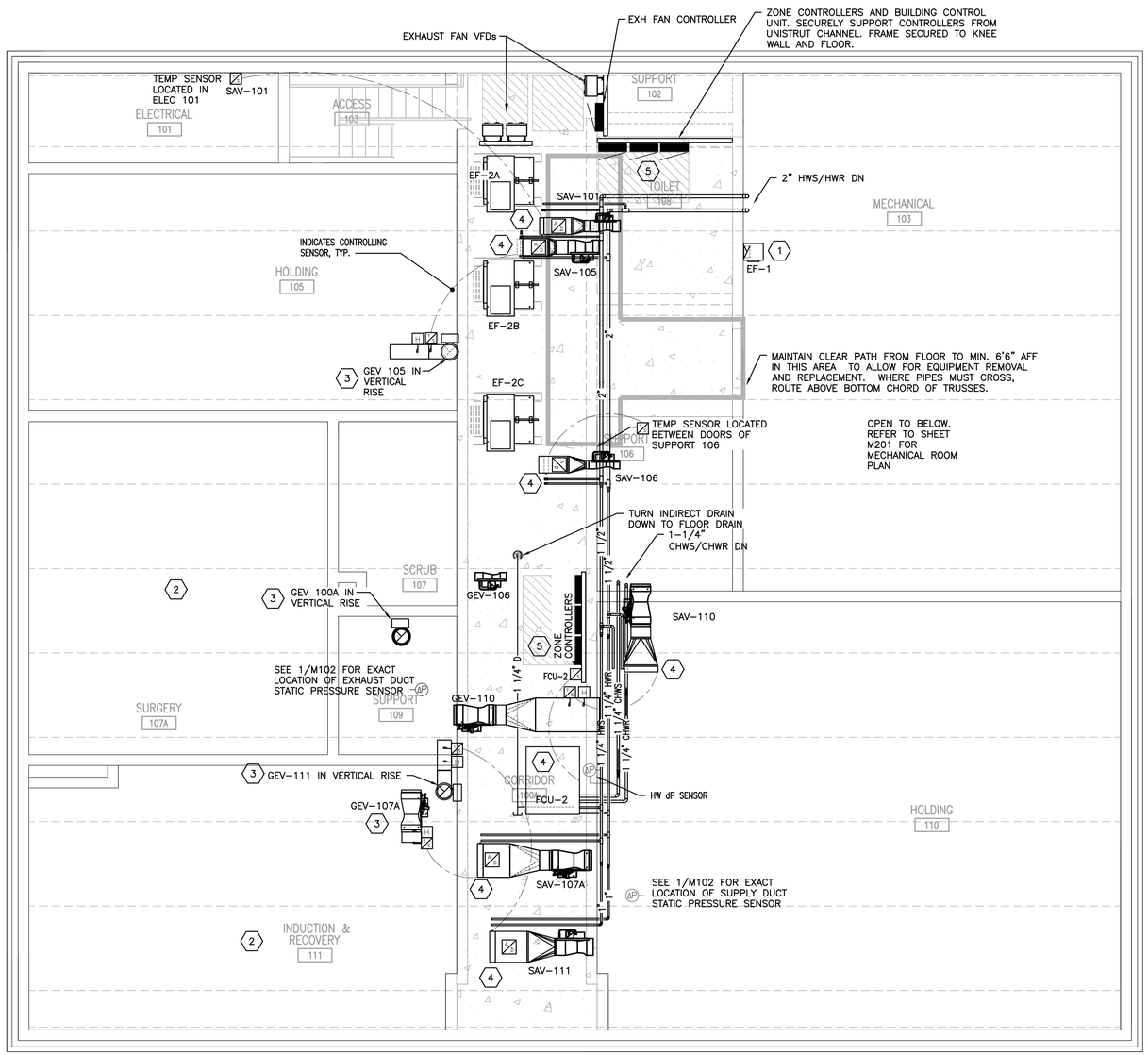

1 M202 EQUIPMENT PLATFORM – MECHANICAL PIPING AND CONTROLS
SCALE: 1/4" = 1'0"

SHEET KEYED NOTES

1. INTERLOCK TOILET EXHAUST FAN WITH TOILET ROOM LIGHT SWITCH.
2. ANY PIPING INSTALLED ABOVE INDUCTION/RECOVERY AND SURGERY ROOMS SHALL BE ROUTED ENTIRELY BETWEEN AND THROUGH TRUSSES DUE TO CEILING ELEVATION. CEILINGS ARE 12'0"AFF TO ACCOMMODATE HOIST.
3. LOCATE EQUIPMENT AND SENSORS WHICH MUST BE SERVICED AS NEAR TO PLATFORM AS FEASIBLE.
4. INSTALL DISCHARGE AIR SENSOR DOWNSTREAM OF REHEAT COIL, MIN. DISTANCE 2'0" BUT STILL ACCESSIBLE FROM PLATFORM.
5. ZONE CONTROLLERS MAY BE CONSOLIDATED INTO FEWER ENCLOSURES AS NEEDED. ROOM NAME AND NUMBER FOR THE APPLICABLE CONTROLLER(S) SHALL BE IDENTIFIED WITH AN ENGRAVED LABEL ON THE ENCLOSURE COVER.

Wagner Architecture, pllc
92 ELAM COURT
NEW HILL, NORTH CAROLINA 27562
TEL. (919) 612.5050

Kramer Engineering Services, pllc
5517 Cascade Dr Chapel Hill, NC 27514
TEL (919)933-3350
email: donna@kespllc.com
Firm license: P-1099

bennett&pless
formerly LHC STRUCTURAL ENGINEERS

NV5
NV5 ENGINEERS AND CONSULTANTS, INC.
3300 REGENCY PARKWAY, STE 100
CARY, NC 27518
P: 919.851.1912 www.NV5.com
NC License # F-1333
formerly CALYX Engineers + Consultants

NORTH CAROLINA PROFESSIONAL SEAL 14917 ENGINEER DONNA D. KRAMER
2023

PREPARED FOR
NORTH CAROLINA STATE UNIVERSITY
COLLEGE OF VETERINARY MEDICINE

0 2' 4' 8'
SCALE: 1/4" = 1'-0"

TRUE NORTH
PLAN NORTH

TRANSLATIONAL RESEARCH FACILITY

revisions

building number

cadd file number

drawn by: EAP

checked by: DDK

date: ISSUED FOR CONSTRUCTION – 05/18/23

project number
NCSU CODE: 42124
ITEM: 305
WA 202207
SCO#: 21-24030-01A

EQUIPMENT PLATFORM - MECHANICAL PIPING AND CONTROLS

sheet number: M202

revision number:

AIR HANDLING UNIT SCHEDULE

BUILDING	TRF
SYSTEM NO.	AHU-1
LOCATION	MECHANICAL ROOM 108
DESIGN (MAX) CFM / NORMAL FULL LOAD CFM	7000 / 5900
PERCENT OUTSIDE AIR	100
FILTER	
FILTER ARRANGEMENT (DRAWTHROUGH/BLOWTHROUGH)	DRAWTHROUGH
TYPE OF FILTER (BAG/CARTRIDGE/ETC.)	CARTRIDGE
FILTER EFFICIENCY % (PROVIDE LONG-LIFE FINAL FILTERS)	MERV 7 PRE-FILTER MERV 14 FINAL FILTER
DEPTH OF FILTERS	PRE - 2" PLEATED MERV 14 -12" CARTRIDGE
MAXIMUM FACE VELOCITY IN F.P.M.	500
PREFILTER MAX AIR PRESSURE DROP (CLEAN/DIRTY)	0.15/0.70
MERV 14 MAX AIR PRESSURE DROP (CLEAN/DIRTY)	0.65/1.00
REMARKS: PRODUCTS BY FLANDERS, AAF, FARR, CAMFIL, OR AIRGUARD ARE ACCEPTABLE	
PRE-HEAT COIL - DESIGN CFM	7,000
COIL ARRANGEMENT (DRAWTHROUGH/BLOWTHROUGH)	DRAWTHROUGH
TYPE OF HEATING (STEAM/HOT WATER/HEAT PUMP)	HOT WATER
E.A.T. DEGREES F. DB	15
L.A.T. DEGREES F. DB	55
TOTAL CAPACITY (MBTUH)	302
EWT/LWT	180/160
MAXIMUM GPM	31
NO. OF ROWS	1
FINS PER INCH	6.75
AIR PRESSURE DROP	0.09"
CONNECTION SIZE (COIL QTY)	1.5" (1)
REMARKS: STAINLESS STEEL CASING	
HUMIDIFIER - DESIGN CFM	7,000
WINTER DESIGN CONDITIONS (DB/RH)	72/50%
LOAD (LB/HR)	203
LOAD PLUS LOSS (LB/HR)	234
STEAM PRESSURE (PSI)	15
MAXIMUM ABSORPTION DISTANCE (INCHES)	7
REMARKS: DISPERSION TUBES SHALL BE INSULATED. ULTRA-SORB LV OR EQUAL BY NORTEC OR ARMSTRONG	
COOLING COIL - DESIGN CFM	7,000
COIL ARRANGEMENT (DRAWTHROUGH/BLOWTHROUGH)	DRAWTHROUGH
TYPE OF COOLING (CHILLED WATER/DX)	CHILLED WATER
FINS PER INCH	7
MAXIMUM NO OF ROWS	6
MAXIMUM FACE VELOCITY	420
AIR PRESSURE DROP	0.37"
E.A.T. DEGREES F. DB/WB	95/78
L.A.T. DEGREES F. DB/WB	55.0/54.8
TOTAL CAPACITY (MBTUH)	570
SENS. CAPACITY (MBTUH)	303
E.W.T.	44
L.W.T.	58
GPM	82
CONNECTION SIZE (COIL QTY)	2" (2)
REMARKS STAINLESS STEEL CASING; COPPER HEADER CHW CONTROL VALVE SHALL BE PRESSURE INDEPENDENT WATER VELOCITY AT FULL LOAD SHALL BE 4-6 FPS	
SUPPLY FANS (QTY IN ARRAY, N+1)	4
CFM (TOTAL) PER AHU	7,000
CFM/FAN (CFM/FAN AT N-1)	1,750 (2,333)
TOTAL STATIC PRESSURE (INCLUDES 1.7" FILTER ALLOWANCE)	5.00"
EXTERNAL STATIC PRESSURE	2.50"
WHEEL DIAMETER	15"
FAN RMP AT DESIGN (FAN RPM AT N-1)	3,042 (3,498)
FAN CLASS (ONE FAN CLASS ABOVE REQUIRED)	III
BHP AT DESIGN (BHP AT N-1)	2.2 (3.2)
TOTAL OPERATING POWER AT DESIGN/ HP PER FAN	8.81/5
MOTOR DRIVE/RPM	DIRECT/3500
VOLTAGE/PHASE/CYCLES	208/3/60
TYPE FAN	HOUSED PLENUM ARRAY
REMARKS: UNIT SHALL BE PROVIDED WITH UV AIR DISINFECTION SYSTEM AS **ADD ALTERNATE #13.** INTERNAL STATIC PRESSURE SHALL BE SUBMITTED AND INCLUDE FILTERS, INLET AND DISCHARGE DAMPERS, HOUSING, PREHEAT COIL, COOLING COIL, AND HUMIDIFIER SPACE CONDITIONS: SUMMER 70F-75F, 50%RH WINTER 68-72F, 50%RH FANS ARE DIRECT DRIVE WITH VARIABLE SPEED DRIVE; FAN CLASS AND MOTOR SHALL BE SELECTED SO AS NOT TO TRIP IF VFD IS OPERATED IN BYPASS MODE AT 3500 RPM. PROVIDE LOW-LEAKAGE INLET AND OUTLET DAMPERS. PROVIDE BACKDRAFT DAMPERS AT EACH FAN.	

DIFFUSER AND GRILLE SCHEDULE

ID	TYPE	MFR	MODEL	CFM	NECK SIZE	DESCRIPTION
A	SUPPLY	NAILOR	6250- -O---S-SR	TO 125 TO 210 TO 325 TO 550 TO 650	9x9 TO 6" 9x9 TO 8" 15x15 TO 10" 15x15 TO 12" 15x15 TO 14"	LOUVERED DIFFUSER WITH ADJUSTABLE PATTERN CONTROLLER. ALUMINUM CONSTRUCTION WITH REINFORCED CORNERS. BAKED, WHITE ENAMEL FINISH. PLASTER FRAME FOR GYPSUM BOARD CEILING. SQUARE-TO-ROUND TRANSITION COLLAR. OPPOSED BLADE DAMPER, ADJUSTABLE THROUGH FACE OF DIFFUSER. 4-WAY BLOW UNO
B	SUPPLY	NAILOR	61DH-O--S	TO 350 TO 500	16X6 16X8	DOUBLE DEFLECTION, CORROSION RESISTANT STEEL, SIDEWALL OR DUCT MOUNTED REGISTER. INTEGRAL OPPOSED BLADE DAMPER. WHITE, BAKED ENAMEL FINISH.
C	SUPPLY	NAILOR	92FFD-316SS-RMBC	TO 400	24X48	FAN FILTER DIFFUSER WITH HEPA FILTER; TYPE 316 STAINLESS STEEL; ROOM SIDE REPLACEABLE FILTER, MOTOR, AND CONTROLS. 120V/1 PH.
D	EXHAUST	NAILOR	67FB45-H-O	TO 100 TO 250 TO 425 TO 750	10"X10" 14"X14" 20"X14" 20"X20"	LOUVERED STAINLESS STEEL GRILLE, FIXED BLADES, 45 DEG ANGLE, HINGED FACE. PLASTER FRAME FOR GYPSUM CEILING; SHALL ACCOMMODATE 1" DISPOSABLE FILTER; SIZED FOR STANDARD FILTER. OPPOSED BLADE DAMPER.
E	EXHAUST	NAILOR	6145H-O	TO 350 TO 500	16"X6" 16"X8"	LOUVERED GRILLE, FIXED 45 DEG BLADES, FRAME FOR SIDEWALL MOUNTING. STEEL WITH APPLIANCE WHITE FINISH. OPPOSED BLADE DAMPER.
F	EXHAUST	NAILOR	6755H-HD-O	TO 600	22"X16"	HEAVY DUTY STAINLESS STEEL GRILLE, FIXED 45 BLADES, FRAME FOR SIDEWALL MOUNTING. BLADES HORIZONTAL TO LONG DIMENSION. OPPOSED BLADE DAMPER.
G	EXHAUST	NAILOR	6755V-HD-O	TO 600	14"X24"	HEAVY DUTY STAINLESS STEEL GRILLE, FIXED 45 BLADES, FRAME FOR SIDEWALL MOUNTING. BLADES HORIZONTAL TO SHORT DIMENSION. OPPOSED BLADE DAMPER.

NOTES:
1. EQUIVALENT PRODUCTS BY TITUS, PRICE, METALAIRE, KRUEGER, OR TUTTLE & BAILEY SHALL BE ACCEPTED.
2. AT PROJECT COMPLETION, INSTALL PLEATED FILTERS IN ALL FILTER GRILLE UNITS.

STEAM PRESSURE REGULATING AND RELIEF VALVE

INLET PRESSURE (PSIG)	OUTLET PRESSURE (PSIG)	SIZE	RELIEF VALVE SET PRESSURE (PSIG)	MINIMUM REGULATOR VALVE Cv	REGULATOR VALVE CAPACITY (LB/HR)	MINIMUM RELIEF VALVE CAPACITY (LB/HR)
75	15	1-1/4"	25	8	1200	1650

NOTE: UNDER ALTERNATE NO 12, REGULATING VALVE SHALL BE SPENCE MODEL ED2.

CONDENSATE RECOVERY PUMP SCHEDULE

ID	QTY	EDR	CAPACITY GPM	DISCHARGE PRESSURE	RECEIVER CAPACITY	DISCH SIZE	RETURN SIZE	VENT SIZE	RPM	MOTOR HP	VOLT/PH
CRU-1	1	6,000	9	40 PSIG	21 GAL	1-1/4"	2"	1-1/4"	3500	1.5	208/3

NOTES:
1. PUMP SHALL BE DUPLEX, FLOAT SWITCH OPERATED WITH INTERGRAL CONTROL PANEL, AND CAST IRON TANK. PUMPS BY ARMSTRONG, SPIRAX SARCO, SHIPCO, PEERLESS, WEIL, WEINMAN, OR B&G SHALL BE ACCEPTED.
2. PROVIDE WITH ISOLATION VALVES BETWEEN RECEIVER AND PUMPS.

AIR VALVE AND REHEAT COIL SCHEDULE

ROOM NO.	SERVICE	ID[a]	AIR HANDLER	EXHAUST SYSTEM	SUPPLY OR EXHAUST	DESIGN CFM[b]	POS OR NEG[d e]	TRACKING or DIFFERENTIAL CFM[e]	AIR VALVE OR TB SIZE	ROOM VOLUME (CF)	MIN AIR CHANGE RATE/HR[f]	ACTUAL AIR CHANGE RATE/HR[i]	REHEAT COIL CAPACITY (MBH)[g]	COIL GPM	PIPE RUNOUT SIZE (INCHES)	REHEAT VALVE CV
101, 100	ELECTRICAL, VESTIBULE	SAV-101	AHU-1A/B		SUPPLY	450	POS		8	-	-	-	19.0	2.00	-	-
104	TOILET			EF-1		75										
106, 100A	SUPPORT	GEV-106	-	EF-2	EXHAUST	250	-	100	6	-	-	-	-	-	-	-
	SUPPORT, CORRIDOR	SAV-106	AHU-1A/B	-	SUPPLY	350	POS	-	6	1350	6 SUPPORT	10	15.1	1.50	3/4"	0.67
100A[h]	CORRIDOR	GEV-100A		EF-2	EXHAUST	285-685		VARIES	10	-						
110	LARGE HOLDING[k]	GEV-110	-	EF-2	EXHAUST	1650 or 1845	SW	-	14	-	-	-	-	-	-	-
		SAV-110	AHU-1A/B	-	SUPPLY	1740	-	100	14	7020	15	15	75.0	7.50	1"	3.34
105	SMALL HOLDING[k]	GEV-105	-	EF-2	EXHAUST	725 OR 925	SW	-	10	-	-	-	-	-	-	-
		SAV-105	AHU-1A/B	-	SUPPLY	825	-	100	10	3258	15	15	35.0	3.50	3/4"	1.56
107A 107 109	SURGERY, SCRUB & SUPPORT	GEV-107A	-	EF-2	EXHAUST	1275	-	320	12	-	-	-	-	-	-	-
		SAV-107A	AHU-1A/B	-	SUPPLY	1595	POS	-	14	4200	20 SURGERY	20	65.0	6.50	1"	2.89
111, 100B	INDUCTION/RECOVERY & VESTIBULE[k]	GEV-111	-	EF-2	EXHAUST	750	-	175	10	-	-	-	-	-	-	-
		SAV-111	AHU-1A/B	-	SUPPLY	925	POS	-	10	4656	10 IND/REC	10	35.0	3.50	3/4"	1.56

NOTES:
1. ALL UNITS SHALL BE PRESSURE INDEPENDENT
2. AIR VALVES WHICH MEASURE AIRFLOW INDEPENDENT OF AVAILABLE STATIC PRESSURE BY TEK-AIR, ACCUVALVE, OR PHOENIX SHALL BE ACCEPTED
3. TERMINAL BOXES SHALL:
   A. BE FULLY LINED WITH NON-POROUS, FIBER FREE, CLOSED CELL ELASTOMERIC FOAM LINER, 3/4" THICK, WITH MECHANICAL FASTENERS.
   B. HAVE INSULATED, BOTTOM ACCESS DOOR WITH CAMLOCK LATCHES WHICH MAY BE REMOVED WITHOUT USE OF TOOLS.
   C. MULTI-POINT FLOW SENSOR SHALL BE REMOVABLE.
5. COORDINATE WITH CONTROLS SUBCONTRACTOR FOR HOT WATER AND AIRFLOW CONTROLS. PROVIDE TOGGLE DISCONNECT ON UNIT-MOUNTED CONTROLLERS.
6. ALL HOT WATER COILS SHALL BE MINIMUM 2 ROW STANDARD COILS WITH 1/2" COPPER TUBES AND ALUMINUM FINS.
7. INSTALL REDUCING FITTINGS AS NEEDED BETWEEN BRANCH RUNOUT, CONTROL VALVE, AND HOT WATER COIL CONNECTION.
8. AIR VALVE AIR PRESSURE DROP AT MAX DESIGN CFM SHALL NOT EXCEED 0.3"WG; REHEAT COIL AIR PRESSURE DROP SHALL NOT EXCEED 0.20"WG; TERMINAL BOX AIR PRESSURE DROP SHALL NOT EXCEED 0.40"WG.
9. AIR AND WATER BALANCE SHALL BE +/- 5%.

FOOTNOTES:
[a] SAV = SUPPLY AIR VALVE WITH FACTORY INSULATION GEV = GENERAL EXHAUST AIR VALVE, STAINLESS STEEL TB = TERMINAL BOX WITH HOT WATER REHEAT
[b] DESIGN CFM CLACULATED TO MAINTAIN MINIMUM AIR CHANGE RATE.
[d] POS = POSITIVE; NEG = NEGATIVE; SW = SWITCHABLE BETWEEN POSITIVE AND NEGATIVE; NEUT = NEAUTRAL BALANCE
[e] IN POSITIVE ROOMS, EXHAUST AIR VALVE SETPOINT SHALL TRACK SUPPLY AIR CFM BY TRACKING CFM AMOUNT. IN NEGATIVE ROOMS, SUPPLY AIR VALVE SETPOINT SHALL TRACK EXHAUST AIR CFM BY TRACKING CFM AMOUNT
[f] PER NIH DRM
[g] BASED ON 180°F EWT
[h] GEV-100A SETPOINT SHALL VARY DEPENDING ON HOW MANY SWITCHABLE ROOMS ARE POSITIVE OR NEGATIVE. BOTH ROOMS NEGATIVE, SETPOINT =285; ONE ROOM NEGATIVE, SETPOINT = 485; BOTH ROOMS POSITIVE, SETPOINT = 685.
[i] CALCULATED FOR THE PRIMARY USE ROOM (E.G. ACTUAL AIR CHANGE RATE IS INDICATED FOR SURGERY, NOT SUPOORT AND SCRUB WHICH ARE SUPPLIED BY THE SAME AIR VALVE AS SURGERY BUT HAVE LOWER REQUIRED AND ACTUAL AIR CHANGE RATES).
[k] REDUCE AIR CHANGE RATE TO 5 DURING SEASONAL SETBACK SUCH AS DURING WINTER BREAK WHEN NO ANIMALS ARE HOUSED AND NO SURGERIES ARE TAKING PLACE.

PUMP SCHEDULE

ID	QTY	LOCATION	PURPOSE	FLUID	MFG	MODEL	SIZE	IMPELLER DIAM (IN.)	GPM	DYNAMIC HEAD, FT	DESIGN RPM	MOTOR RPM	DESIGN BHP	MOTOR HP	VOLT/PH	REMARKS
HWP-1A, 1B	2	MECHANICAL 108	HEATING HOT WATER	WATER	B&G	E-1510	1.25BC	8.875	63	65	1594	1800	1.8	3.0	208/3	VARIABLE SPEED, VARIABLE FLOW, N+1 REDUNDANCY. PROVIDE SUCTION DIFFUSER AND VFD DUTY MOTOR.
CHWP-1	1	MECHANICAL 108	CHW TERTIARY	WATER	B&G	E-1510	2BD	8.5	100	60	1572	1800	2.24	5.0	208/3	VARIABLE SPEED, VARIABLE FLOW. PROVIDE SUCTION DIFFUSER AND VFD DUTY MOTOR.
HWP-2	1	MECHANICAL 108	AHU-1 HW PRE-HEAT COIL	WATER	B&G	E-90	1AAB	4.125	20	15	1725	1800	0.14	0.25	208/1	CONSTANT SPEED.

NOTES
1. EQUIVALENT PUMPS BY AURORA, PACO, PATTERSON, OR TACO SHALL BE ACCEPTED.

FAN COIL UNIT SCHEDULE

ID	LOCATION	STYLE	MFR (NOTE 2)	MODEL	COOLING COIL ROWS	COOLING BTU/HR (TOT/SENS)	COOLING GPM	HEATING COIL ROWS	HEATING BTU/HR	HEATING GPM	TOTAL CFM	VOLT/ PHASE	FLA
FCU-1	MECHANICAL ROOM 103	HORIZONTAL, DIRECT DRIVE, CABNET UNIT	DAIKIN	BCHD012	6	43,700/30,800	8.7	3	86,000	6.0	1000	120/1	4.9
FCU-2	MEZZANINE	HORIZONTAL, DIRECT DRIVE, CABNET UNIT	DAIKIN	BCHD012	6	43,700/30,800	8.7	3	86,000	6.0	1000	120/1	4.9

NOTES:
1. VALVE PACKAGE SHALL BE PIPED EXTERNAL TO THE UNIT FOR EASIER MAINTENANCE.
2. EQUIVALENT PRODUCTS BY TRANE, MCQUAY, CLIMATEMASTER, DAIKIN, JCI/YORK, OR ENVIROTEC SHALL BE ACCEPTED.
3. DIRECT DRIVE MOTOR WITH EXTERNAL FUSED DISCONNECT.
4. UNIT MOUNTED FAN 'OFF-SPEED CONTROL' SWITCH. CFM IS BASED ON HIGH SPEED.
5. FILTERS: HORIZONTAL CABINET - 2" PLEATED, REPLACEABLE FROM SIDE OR BOTTOM OF UNIT. PROVIDE ONE SET OF SPARE FILTERS AT PROJECT COMPLETION.
6. UNIT SHALL BE PROVIDED WITH STAINLESS PRIMARY AND SECONDARY DRAIN PANS WITH OVERFLOW SWITCH. EXTEND 1-1/4" PRIMARY DRAIN TO FLOOR DRAIN OR TO BUILDING EXTERIOR.
7. COIL HOOK-UP KITS: BY MFR OR CONTRACTOR; SHALL BE EXTERNAL TO UNITS WITH UNION ENDS.
   RETURN LINE KIT: BALL VALVE, FLOW-LIMITING STAINLESS STEEL FLOW CARTRIDGE, TWO P/T PLUGS, AND AIR VENT.
   MODULATING CONTROL VALVE (75 PSIG CLOSE-OFF) SHALL BE PROVIDED BY SCHNEIDER ELECTRIC.
   SUPPLY LINE KIT: BALL VALVE, STRAINER, DRAIN VALVE WITH 3/4" CAPPED HOSE THREAD OUTLET, AND P/T PLUG.
   DRAIN VALVE WITH 3/4" CAPPED HOSE THREAD OUTLET, AND P/T PLUG.
   ASSEMBLIES SHALL BE GRISWOLD CPP-2IRIS WHICH INCLUDES ISOLATOR 'S', ISOLATOR 'R', UNION 'U' OR EQUAL BY FDI OR B&G.
   OR EQUAL BY FDI, IMI OR B&G.
8. COORDINATE WITH CONTROLS SUBCONTRACTOR TO INTEGRATE ROOM SENSOR, CONTROL VALVE, OVERFLOW SWITCH, AND FAN START-STOP INTO BUILDING AUTOMATION SYSTEM.
9. CABINET DESIGN SHALL BE FOR EXPOSED LOCATIONS WITH HORIZONTAL DISCHARGE DUCT CONNECTION.

EXHAUST FAN SCHEDULE

ID	PURPOSE	QTY	MANUFACTURER	MODEL	TYPE	WHEEL DIAMETER	FAN CLASS	CFM	TSP (IN. WG)	VOLT/PH	FAN RPM	MOTOR RPM	BHP	MOTOR HP	REMARKS
EF-1	TOILET ROOM EXHAUST	1	COOK	70SQND-EC	OPEN - ELEC COMMUTATED	-		80	0.25	120/1	1395	1725	-	1/6	NOTES 1, 10-12
EF-2A, -2B, -2C	VIVARIUM EXHAUST	3	COOK	180CA-SWSI	CENT. UTIL SET	18	II	3000	2"	208/3	1512	1725	1.33	2	NOTES 1-10

NOTES:
1 UL LISTED
2 FAN IS INTENDED FOR CONTINUOUS OPERATION. START-STOP AND MONITORING THROUGH EMCS.
3 MOTORS SHALL BE NEMA PREMIUM EFFICIENCY, VFD RATED, TEFC, WITH THERMAL OVERLOADS, SHAFT GROUNDING RING, AND CLASS F INSULATION.
4 EXTRA-LONG LIFE BEEARINGS WITH MINIMUM L10 BEARING LIFE OF 80000 HOURS.
5 PROVIDE ADJUSTABLE SHEAVES FOR BALANCING. REPLACE WITH FIXED SHEAVE AFTER BALANCING IS COMPLETE.
6 PROVIDE THE FOLLOWING OPTIONS: FAN DRAIN WITH THREADED CAP, HINGED ACCESS COVER WITH GASKET, INLET AND OUTLET FLANGES, INLET PIEZOMETER RING, EXTENDED LUBE LINES, EPOXY COATED DRIVE FRAME, BELT GUARD, MECHANICAL SHAFT SEAL, AND HOUSED SPRING ISOLATORS ON ISOLATION BASE.
7 MOTOR CASING SHALL BE CAST IRON WITH CLASS F INSULATION, CLASS B TEMPERATURE RISE, BY WEGG, TECO, WESTINGHOUSE, OR TOSHIBA.
8 PROVIDE STAINLESS STEEL SHAFT
9 COORDINATE WITH MECHANICAL CONTRACTOR FOR ARRANGEMENT. INLET AND OUTLET DAMPERS CONTROLLED BY BAS SUBCONTRACTOR
10 PRODUCTS BY GREENHECK, BUFFALO, LOREN COOK, OR TWIN CITY SHALL BE APPROVED.
11 PROVIDE FAN MOUNTED SPEED CONTROL, NEMA 1 DISCONNECT, RUBBER-IN-SHEAR ISOLATORS, EPOXY COATED ROOF CAP WITH BIRD SCREEN, AND GRAVITY BACKFLOW DAMPER.
12 FAN SHALL BE INTERLOCKED WITH WALL SWITCH.

AHU PIC VALVE SCHEDULE

LOCATION	TYPE	FAIL-SAFE	CAPACITY (GPM)	CV	CLOSE-OFF PRESSURE	STEAM ENTERING PRESURE	CONTROL	PRESSURE CLASS	ACTUATION
AHU-1 CHILLED WATER	BALL	N.O.	82	35.8	75 PSIG	N/A	PID	200	ELECTRONIC
AHU-1 PREHEAT	BALL	N.O.	31	15	50 PSIG	N/A	PID	200	ELECTRONIC

NOTE: VALVES SHALL BE MANUFACTURED WITH TEST PORTS ON INLET AND OUTLET

STEAM-TO-HOT WATER HEAT EXCHANGER SCHEDULE

ID	MANUFACTURER	MODEL	SHELL DIAM.	BUNDLE LENGTH	WATER NPT	STEAM NPT	CONDENSATE NPT	HEATING SURFACE AREA	MIN. EXCESS SURFACE AREA	NO. OF PASSES SHELL/TUBE	GPM	MBH	EWT	LWT	MAX WATER dP	STEAM PRESSURE	STEAM LB/HR
HX-1	BELL & GOSSET	SU-64-2	6.63"	48"	2"	2"	0.5"	17.9 FT^2	20%	1/2	63	615	160	180	1 PSIG	15 PSIG	648

NOTES:
1. 3/4" DIAM. COPPER TUBES
2. HOT WATER EXPANSION TANK SHALL BE ASME RATED, DIAPHRAGM TYPE SIMILAR TO B&G D-15V.
3. PROVIDE WITH VACUUM BREAKER AND MOUNTING SADDLES.
4. EQUIVALENT PRODUCTS BY ARMSTRONG OR TACO SHALL BE ACCEPTED.

Wagner Architecture, pllc
92 ELAM COURT
NEW HILL, NORTH CAROLINA 27562
TEL. (919) 612.5050

Kramer Engineering Services, pllc
5517 Cascade Dr Chapel Hill, NC 27514
TEL (919)933-3350
email: donna@kespllc.com
Firm license: P-1099

bennett&pless
formerly LHC STRUCTURAL ENGINEERS

NV5 ENGINEERS AND CONSULTANTS, INC.
3300 REGENCY PARKWAY, STE 100
CARY, NC 27518
P: 919.851.1912 www.NV5.com
NC License # F-1313
formerly CALYX Engineers + Consultants

NORTH CAROLINA PROFESSIONAL SEAL 14917 ENGINEER DONNA D. KRAMER 2023

PREPARED FOR
NORTH CAROLINA STATE UNIVERSITY
COLLEGE OF VETERINARY MEDICINE

TRANSLATIONAL RESEARCH FACILITY

revisions

building number

cadd file number

drawn by: EAP

checked by: DDK

date: ISSUED FOR CONSTRUCTION – 05/18/23

project number: NCSU CODE: 42124
ITEM: 305
WA 202207
SCO#: 21–24030–01A

MECHANICAL SCHEDULES

sheet number: M401

revision number:

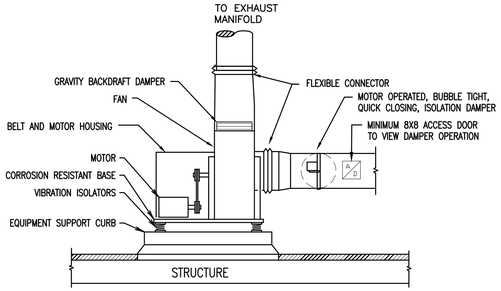

1 M501 **CENTRIFUGAL UTILITY SET**
NO SCALE

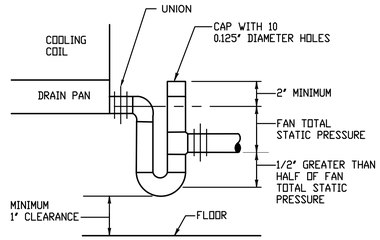

NOTES:
1. PIPING SHALL BE FULL SIZE OF DRAIN CONNECTION.
2. EXTEND DRAIN PIPING TO NEAREST FLOOR DRAIN.
3. WHERE SUPPORTED, ISOLATE DRAIN PIPING FROM CLAMPS WITH TYPE PI ISOLATORS.

2 M501 **CONDENSATE DRAIN FOR DRAW-THROUGH COOLING COILS**
NO SCALE

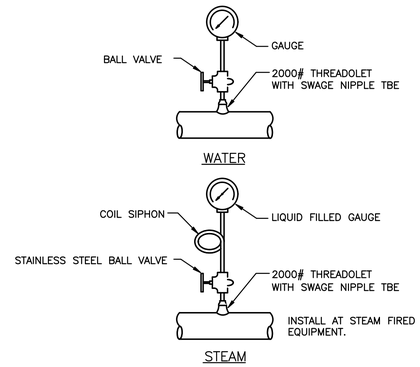

3 M501 **TYPICAL PRESSURE GAUGE**
NO SCALE

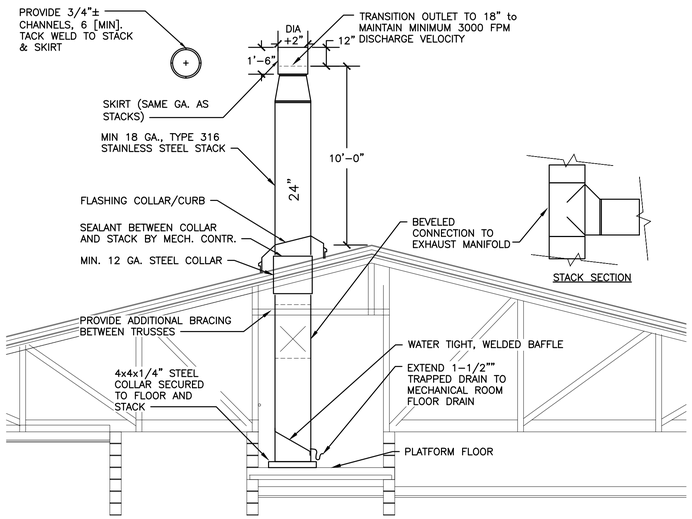

4 M501 **EXHAUST STACK DETAIL**
1/4" = 1'0"

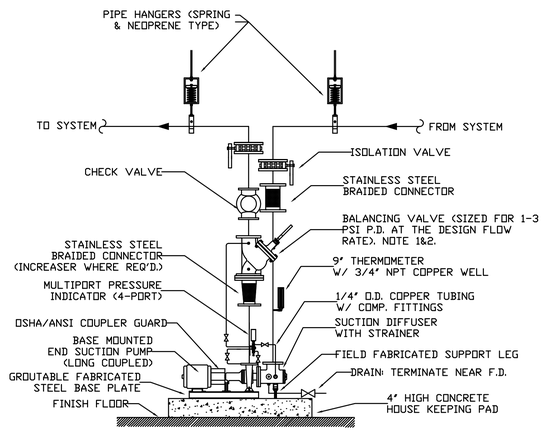

NOTES:
1. TRIPLE DUTY VALVES SHALL NOT BE SUBSTITUTED FOR SEPARATE ISOLATION, CHECK AND BALANCING VALVES.
2. PUMPS CONTROLLED WITH VARIABLE SPEED DRIVES SHALL BE BE PROVIDED WITH BALANCING VALVES.

5 M501 **END SUCTION PUMP DETAIL**
SCALE: NONE

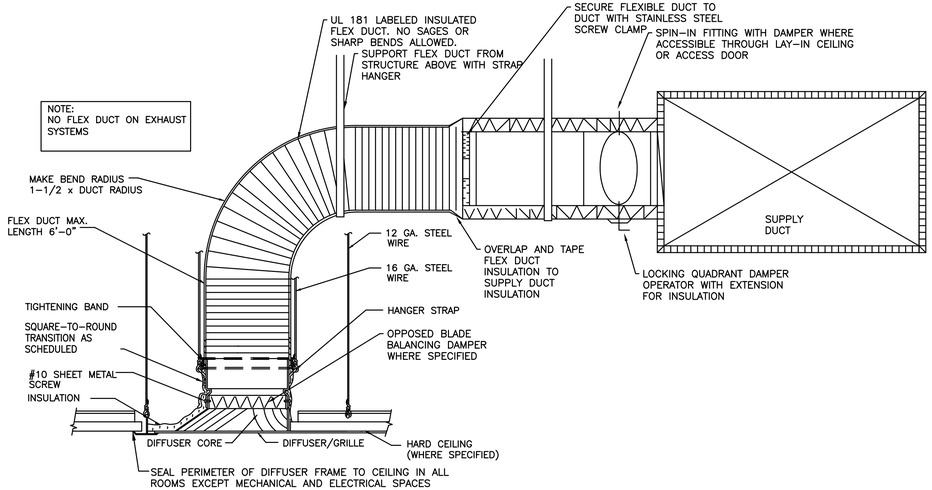

6 M501 **TYPICAL CEILING DIFFUSER TAKE-OFF DETAIL**
NO SCALE

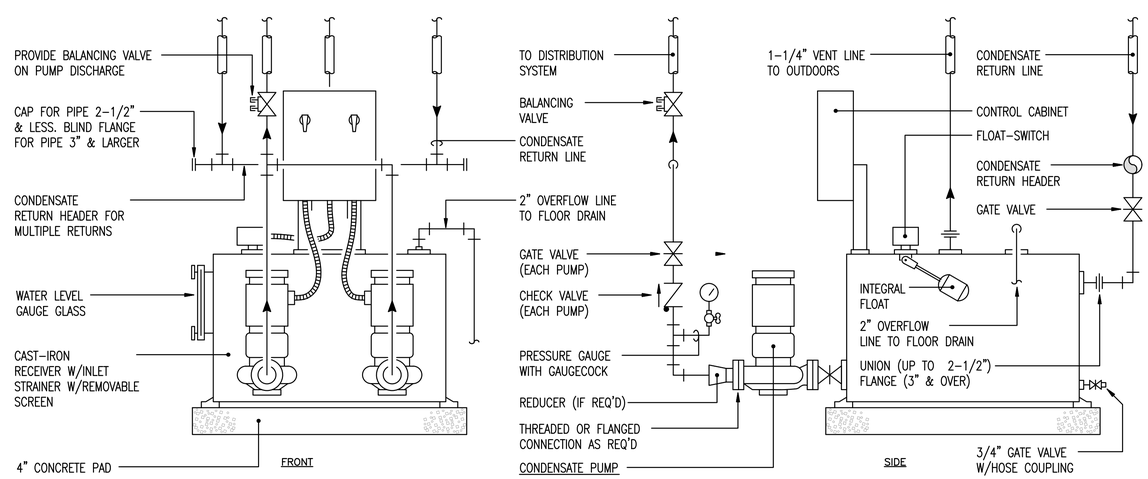

7 M501 **DUPLEX CONDENSATE PUMP & RECEIVER**
NO SCALE

Wagner Architecture, pllc
92 ELAM COURT
NEW HILL, NORTH CAROLINA 27562
TEL. (919) 612.5050

Kramer Engineering Services, pllc
5517 Cascade Dr Chapel Hill, NC 27514
TEL (919)933-3350
email: donna@kespllc.com
Firm license: P-1099

bennett&pless
formerly LHC STRUCTURAL ENGINEERS

NV5
NV5 ENGINEERS AND CONSULTANTS, INC.
3300 REGENCY PARKWAY, STE 100
CARY, NC 27518
P: 919.851.1912 www.NV5.com
NC License # F-1313
formerly CALYX Engineers + Consultants

NORTH CAROLINA PROFESSIONAL SEAL 14917 ENGINEER DONNA D. KRAMER 2023

PREPARED FOR
NORTH CAROLINA STATE UNIVERSITY
COLLEGE OF VETERINARY MEDICINE

TRANSLATIONAL RESEARCH FACILITY

revisions

building number

cadd file number

drawn by: EAP

checked by: DDK

date: ISSUED FOR CONSTRUCTION – 05/18/23

project number: NCSU CODE: 42124
ITEM: 305
WA 202207
SCO#: 21-24030-01A

MECHANICAL DETAILS

sheet number: M501

revision number:

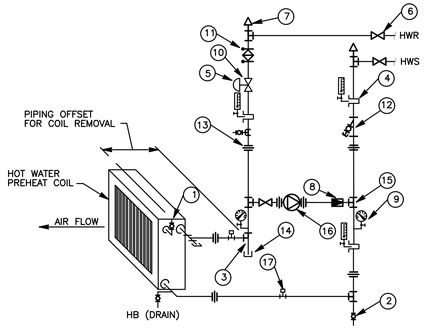

LEGEND

1. MANUAL VENT
2. DRAIN VALVE WITH HOSE COUPLING
3. DIRT LEG 3/4"x 4" LONG
4. THERMOMETER WITH SEPARABLE SOCKET
5. TWO-WAY CONTROL VALVE
6. GATE VALVE, TYP.
7. MANUAL AIR VENT VALVE, TYP.
8. TRIPLE DUTY VALVE
9. PRESSURE GAUGE WITH VALVE
10. PIPING AT TWO-WAY VALVE SHALL BE SAME SIZE AS PORTS
11. CALIBRATED BALANCING VALVE WITH FLOW CHECKING TAPS
12. STRAINER WITH BALL VALVE DRAIN
13. UNION, TYP.
14. PIPE CAP, TYP.
15. PIPE TEE, TYP.
16. PUMP
17. (PETES) PLUG

NOTES:
1. COILS W/2 ROWS OR GREATER SHALL BE PIPED FOR COUNTER FLOW OF WATER AND AIR.
2. PROVIDE PIPING REDUCERS AS REQUIRED.
3. PIPE NIPPLES CONNECTING TO AHU COILS SHALL BE SCHEDULE 80 STEEL OR BRONZE.
4. FOR MULTI-SECTION COILS INSTALL THE FOLLOWING FOR EACH COIL SECTION:
   4.1. DRAIN AND VENT
   4.2. ISOLATION VALVES AND UNIONS OR FLANGES TO PERMIT REMOVAL OF INDIVIDUAL COILS.
   4.3. PETE'S PLUG ON BOTH SUPPLY AND RETURN.

1 / M502 AIR HANDLER HOT WATER PREHEAT COIL PIPING SCHEMATIC
NO SCALE

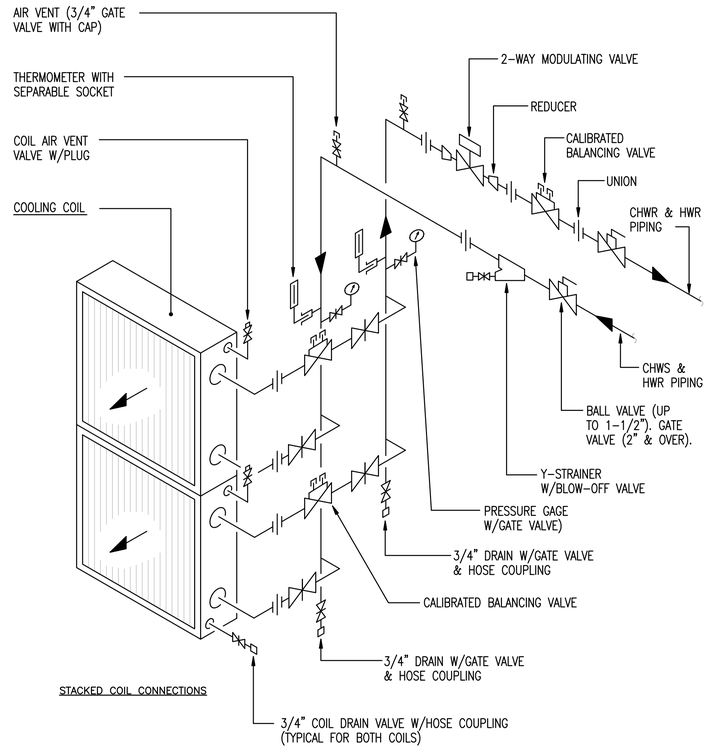

2 / M502 AIR HANDLER CHILLED WATER COIL PIPING
NO SCALE

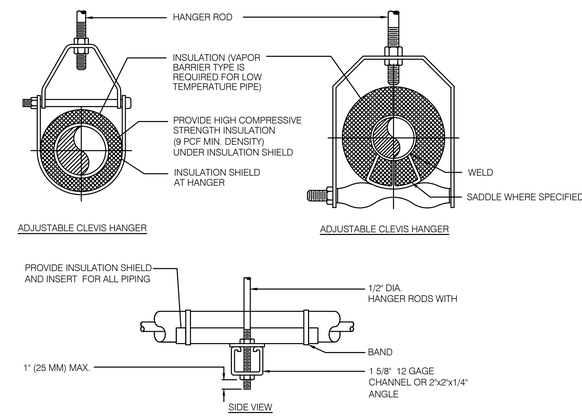

3 / M502 PIPE HANGER DETAIL
NO SCALE

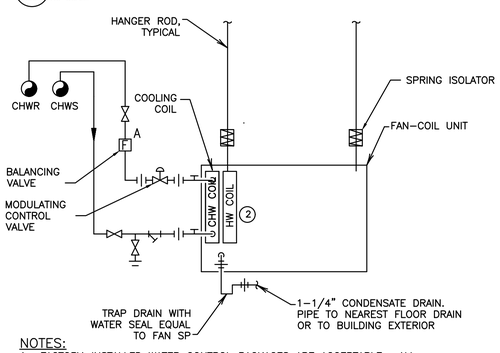

NOTES:
1. FACTORY-INSTALLED WATER CONTROL PACKAGES ARE ACCEPTABLE. ALL COMPONENTS SHALL MEET THE SPECIFICATION REQUIREMENTS. REFER TO SCHEDULES AND SPECIFICATION. VALVE PACKAGES SHALL BE MOUNTED EXTERNAL TO THE UNIT.
2. CONNECTION & PIPING TO HW COIL SIMILAR TO CHILLED WATER COIL WHERE HOT WATER COILS ARE SCHEDULED.
3. PROVIDE CONDENSATE PAN OVERFLOW SWITCH. REFER ALSO TO SCHEDULE AND CONTROLS.

4 / M502 FAN COIL UNIT
NO SCALE

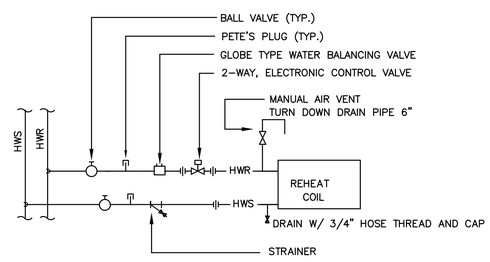

5 / M502 HOT WATER REHEAT COILS
NO SCALE

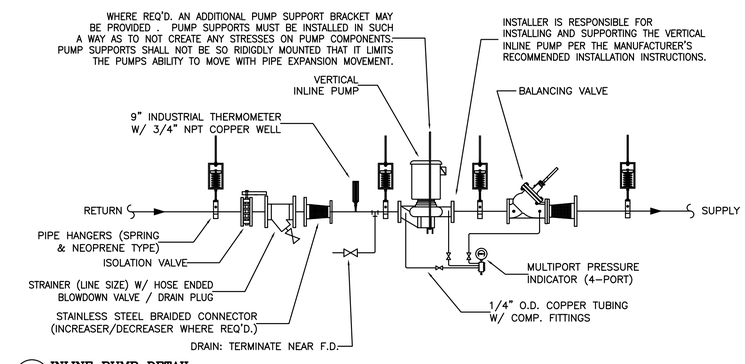

6 / M502 INLINE PUMP DETAIL
NO SCALE

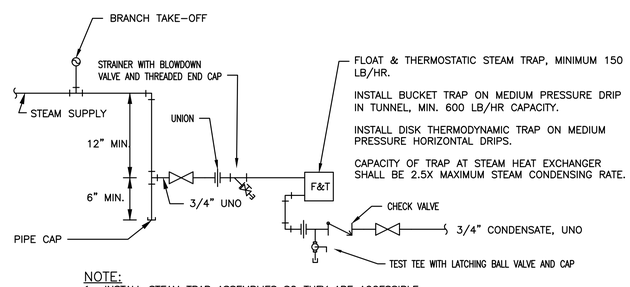

NOTE:
1. INSTALL STEAM TRAP ASSEMBLIES SO THEY ARE ACCESSIBLE FOR SERVICE.

7 / M502 STEAM TRAP ASSEMBLY
NO SCALE

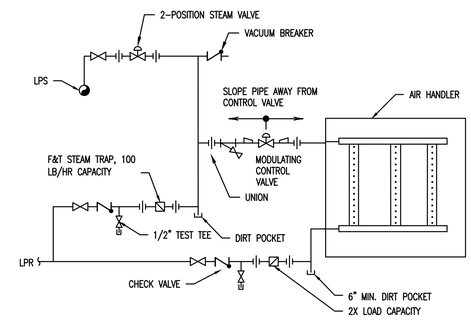

NOTES:
1. PIPING SHALL BE INSTALLED TO PERMIT GRAVITY DRAIN OF COIL WITH NO MOTIVE STEAM PRESSURE.
2. PIPING SHALL SLOPE AWAY FROM CONTROL VALVES.

8 / M502 STEAM GRID HUMIDIFIERS
NO SCALE

Wagner Architecture, pllc
92 ELAM COURT
NEW HILL, NORTH CAROLINA 27562
TEL. (919) 612.5050

Kramer Engineering Services, pllc
5517 Cascade Dr Chapel Hill, NC 27514
TEL (919)933-3350
email: donna@kespllc.com
Firm license: P-1099

bennett&pless
formerly LHC STRUCTURAL ENGINEERS

NV5
NV5 ENGINEERS AND CONSULTANTS, INC.
3300 REGENCY PARKWAY, STE 100
CARY, NC 27518
P: 919.851.1912 www.NV5.com
NC License # F-1313
formerly CALN Engineers • Consultants

NORTH CAROLINA PROFESSIONAL SEAL 14917 ENGINEER DONNA D. KRAMER 2023

PREPARED FOR
NORTH CAROLINA STATE UNIVERSITY
COLLEGE OF VETERINARY MEDICINE

TRANSLATIONAL RESEARCH FACILITY

revisions

building number

cadd file number

drawn by: EAP

checked by: DDK

date: ISSUED FOR CONSTRUCTION – 05/18/23

project number: NCSU CODE: 42124 ITEM: 305 WA 202207 SCO#: 21-24030-01A

MECHANICAL DETAILS

sheet number: M502

revision number:

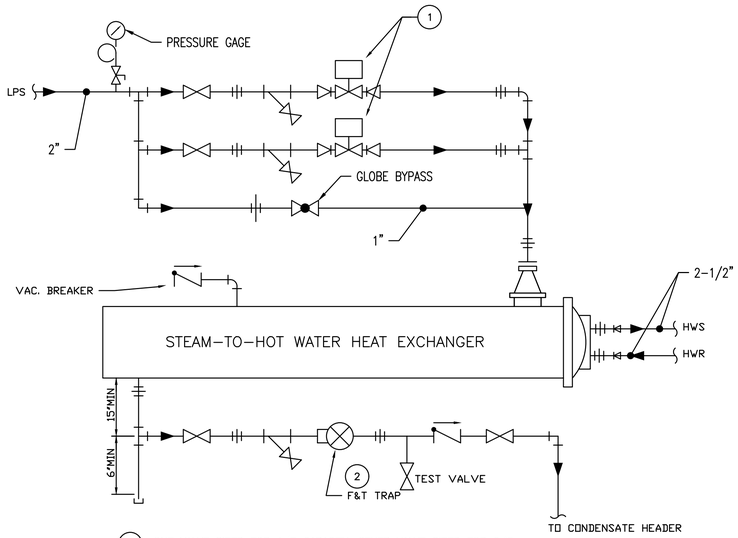

1 ONE VALVE SIZED FOR 1/3 CAPACITY. OTHER VALVE SIZED FOR 2/3 CAPACITY. MODULATING VALVES SHALL BE CHARACTERIZED BALL VALVES.

2 SIZE TRAP FOR 2.5X STEAM DESIGN CONDENSING FLOW RATE.

1 M503 **STEAM CONVERTOR PIPING**
NO SCALE

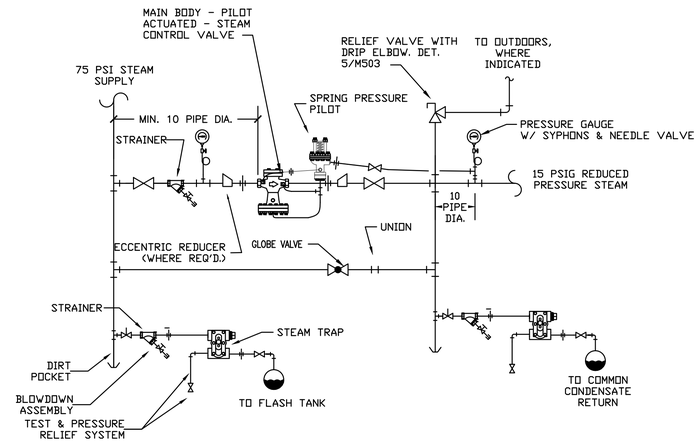

2 M503 **STEAM PRESSURE REDUCING STATION**
NO SCALE

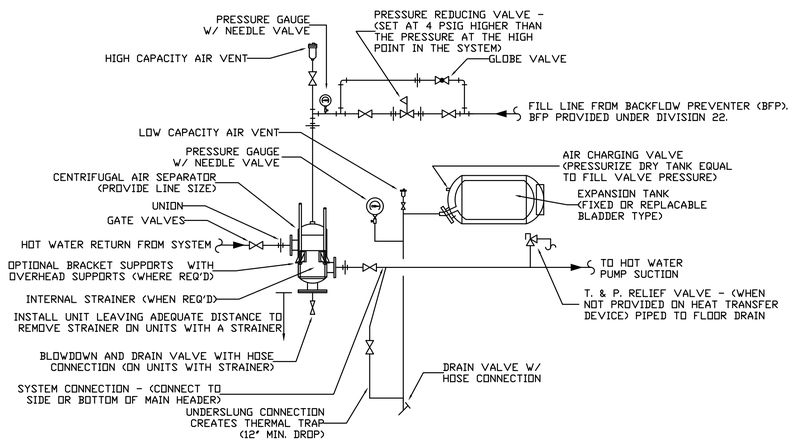

3 M503 **AIR SEPARATOR AND EXPANSION TANK DETAIL**
NO SCALE

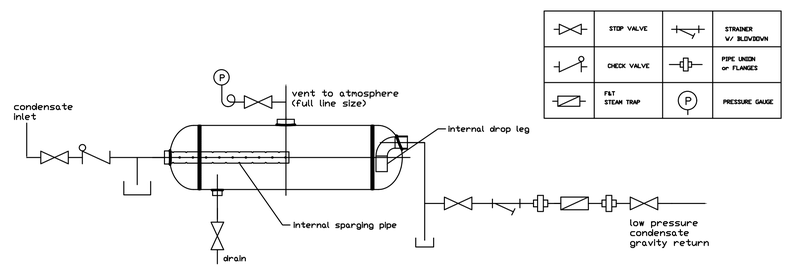

4 M503 **HORIZONTAL FLASH TANK DETAIL**
NO SCALE

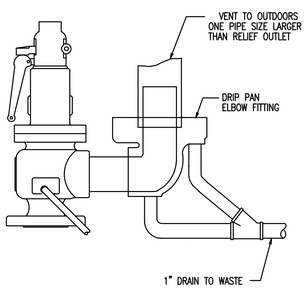

5 M503 **STEAM RELIEF VENT DRIP PAN**
NO SCALE

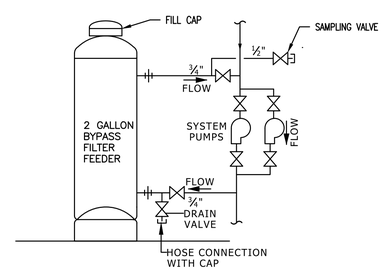

THE FEEDER SHALL NOT BE SUPPORTED BY THE SUPPLY AND RETURN PIPING. THE FEEDER TOP OPENING SHALL NOT BE MORE THAN 48 INCHES ABOVE THE FLOOR TO AVOID ANY SPLASHING OF CHEMICALS ON THE OPERATOR.

6 M503 **MANUAL BYPASS CHEMICAL FEEDER**
NO SCALE

Wagner Architecture, pllc
92 ELAM COURT
NEW HILL, NORTH CAROLINA 27562
TEL. (919) 612.5050

Kramer Engineering Services, pllc
5517 Cascade Dr Chapel Hill, NC 27514
TEL (919)933-3350
email: donna@kespllc.com
Firm license: P-1099

bennett&pless
formerly LHC STRUCTURAL ENGINEERS

NV5
NV5 ENGINEERS AND CONSULTANTS, INC.
3300 REGENCY PARKWAY, STE 100
CARY, NC 27518
P: 919.851.1912 www.NV5.com
NC License # F-1313
formerly CALYX Engineers + Consultants

NORTH CAROLINA PROFESSIONAL SEAL 14917 ENGINEER DONNA D. KRAMER 2023

PREPARED FOR
NORTH CAROLINA STATE UNIVERSITY
COLLEGE OF VETERINARY MEDICINE

TRANSLATIONAL RESEARCH FACILITY

revisions

building number

cadd file number

drawn by EAP

checked by DDK

date ISSUED FOR CONSTRUCTION - 05/18/23

project number
NCSU CODE: 42124
ITEM: 305
WA 202207
SCO#: 21-24030-01A

MECHANICAL DETAILS

sheet number: M503

revision number:

DDC FUNCTION BLOCK LOGIC SYMBOLS

SYMBOL	DESCRIPTION
POINT NAME AO ADDRESS	OUTPUT POINT – TRANSMITS A VALUE FROM THE FB TO A PHYSICAL OUTPUT CHANNEL ON THE CONTROLLER. DESCRIPTOR – CONTROLLER ADDRESS, POINTNAME AND POINT TYPE AO – ANALOG OUTPUT DO – DIGITAL OUTPUT
ADDRESS AI POINT NAME	INPUT POINT – READS A VALUE FROM A PHYSICAL INPUT ON THE CONTROLLER AND CONVERTS FOR USE INSIDE THE FB. DESCRIPTOR – CONTROLLER ADDRESS, POINTNAME AND POINT TYPE AI – ANALOG INPUT DI – DIGITAL INPUT
POINT–NAME VP	VIRTUAL POINT – ANALOG OR DIGITAL VALUE USED WITHIN A FB OR BROADCAST ACROSS THE LAN.
	DIGITAL WIRE – DIGITAL LOGIC CONNECTION BETWEEN FB'S
	ANALOG WIRE – ANALOG LOGIC CONNECTION BETWEEN FB'S
CONST	CONSTANT – CONSTANT VALUE INPUTS
G	GRAPHIC INTERFACE – VALUE APPEARS ON ENTERPRISE BUILDING MANAGEMENT SYSTEM (EBMS) GRAPHIC SCREEN.
A#	ALARM & PRIORITY – TRANSMITS AN ALARM AND ALARM PRIORITY TO THE ENTERPRISE BUILDING MANAGEMENT SYSTEM (EBMS).
M#	MESSAGE AND NUMBER – TRANSMITS A MESSAGE AND MESSAGE NUMBER TO THE ENTERPRISE BUILDING MANAGEMENT SYSTEM (EBMS).
	TREND – ESTABLISHES TREND IN CONTROLLER.
RTM	RUN TIME MONITOR – ACCUMULATES RUNTIME FOR DIGITAL OUTPUT AND CONVERTS TIME TO HOURS.
REF#	REFERENCE FLAG – USED AS CONNECTION TO FB'S BY REFERENCE INSTEAD OF WIRES.
AND	DIGITAL AND GATE– OUTPUT IS ON IF ALL INPUTS ARE TRUE
OR	DIGITAL OR GATE – OUTPUT IS ON IF ANY INPUT IS TRUE.
XOR	DIGITAL EXCLUSIVE OR GATE – OUTPUT IS ON IF ONLY ONE INPUT IS TRUE.
N	INVERSE (NOT)– IF INPUT = ON, OUTPUT = OFF; CONVERSELY IF INPUT =OFF, OUTPUT =ON
RST LATCH0	LATCH OFF– OUTPUT IS OFF WHENEVER INPUT IS ON. OUTPUT REMAINS OFF UNTIL RESET CHANGES FROM OFF TO ON.
RST LATCH1	LATCH ON– OUTPUT IS ON WHENEVER INPUT IS ON. OUTPUT REMAINS ON UNTIL RESET CHANGES FROM OFF TO ON.
ON/OFF # DELAY	ON/OFF DELAY TIMER– AFTER INPUT IS ON, OUTPUT IS ON/OFF AFTER A PREDETERMINED TIME (#) HAS ELAPSED.
CYCLE # DELAY	CYCLE DELAY TIMER – WHEN SET TIME HAS ELAPSED, THE FIRST TIME INPUT IS ON, OUTPUT IS ON AND TIMER RESETS. BEFORE SET TIME HAS ELAPSED, OUTPUT IS OFF WHEN INPUT IS OFF. IF INPUT GOES FROM OFF TO ON BEFORE SET TIME HAS ELAPSED, OUTPUT WILL REMAIN OFF.
PWR	POWER FLAG – ON WHEN CONTROLLER IS INITIALLY POWERED ON AND NO PHASE LOSS IS DETECTED
R FF	FLIP FLOP – CHANGE STATE OF OUTPUT WHEN INPUT CHANGES FROM OFF TO ON: OUTPUT SET TO OFF WHEN RESET (R) GOES CHANGES FROM OFF TO ON
OPTIMUM DB HI I O INC LO	SETPOINT OPTIMIZATION – RESET OF OUTPUT FROM A MAXIMUM VALUE TO A MINIMUM VALUE BASED ON VALUES OR REQUESTS) DB – DEAD BAND INC – INCREMENT/DECREMENT VALUE HI – MAXIMUM RESET VALUE LO – MINIMUM RESET VALUE
SP INTVL MX > +IE+OA I S & B O < –IE–OA MN	SAMPLE & BUMP – CHANGE IN OUTPUT (WITH DEFINED MINIMUM & MAXIMUM VALUES) BY A DEFINED AMOUNT WHEN INPUT DEVIATES FROM SETPOINT (SP) BY A DEFINED AMOUNT AT A DEFINED INTERVAL. I – INPUT O – OUTPUT MX – MAXIMUM OUTPUT MN – MINIMUM OUTPUT INTVL – INTERVAL > +IE, +OA – WHEN INPUT RISES ABOVE SETPOINT BY AMOUNT '+IE', OUTPUT IS INCREASED BY AMOUNT '+OA' < –IE, –OA – WHEN INPUT FALLS BELOW SETPOINT BY AMOUNT '–IE', OUTPUT IS REDUCED BY AMOUNT '–OA'

SYMBOL	DESCRIPTION
SP P I D O I DA	PID CONTROLLER – PROPORTIONAL, INTEGRAL, DERIVATIVE LOOPS USE STANDARD ALGORITHMS TO CALCULATE AN OUTPUT BASED ON A VARIABLE INPUT. PROPORTIONAL IS BASED ON THE DIFFERENCE BETWEEN THE INPUT AND THE SETPOINT. INTEGRAL IS BASED ON THE THE TIME THE INPUT DEVIATES FROM THE SETPOINT. DERIVATIVE IS BASED ON THE THE RATE THE INPUT IS APPROACHING THE SETPOINT. THE PID CAN BE EITHER DIRECT ACTING (DA) OR REVERSE ACTING (RA). IN A DA PID WHEN THE INPUT INCREASES THE OUTPUT INCREASES. IN A RA PID WHEN THE INPUT INCREASES THE OUTPUT DECREASES. OPTIONALLY, AN ADDITIONAL DIGITAL TRIGGER MAY BE ASSIGNED TO THE INPUT SECTION THAT WILL ENABLE/DISABLE CALCULATION OF THE PID LOOP.
SP F L T DA Inc D C I	FLOATING CONTROLLER – OUTPUT WILL INCREASE OR DECREASE INCREMENTALLY AS INPUT DEVIATES FROM SETPOINT. IN A DA CONTROLLER WHEN THE INPUT INCREASES THE OUTPUT INCREASES. IN A RA CONTROLLER WHEN THE INPUT INCREASES THE OUTPUT DECREASES.
RESET 100 180 I O 0 100	RESET CONTROLLER – USER DEFINED OUTPUT VALUE WILL RESET IN A LINEAR RELATIONSHIP BASED ON USER DEFINED INPUT VALUE.
OFF SR ON	SWITCHING RELAY – SWITCHES OUTPUT BETWEEN TWO INPUTS WHEN DIGITAL PILOT INPUT IS ON. SWITCH SHOWN IN NORMAL POSITION
OFF DSR > SP2 ON < SP1	DEADBAND SWITCHING RELAY – DIGITAL OUTPUT CHANGES WHEN INPUT VALUE RISES/FALLS ABOVE/BELOW SETPOINT 1 (SP1). DIGITAL OUTPUT RESTORES TO NORMAL WHEN INPUT RISES/FALLS ABOVE/BELOW SETPOINT 2 (SP2). SWITCH SHOWN IN NORMAL POSITION
I IF > SP O	LOGICAL IF EXPRESSION – THE OUTPUT IS ON IF THE INPUT MEETS THE CONDITION OF THE SETPOINT.
RAMP chng% Max I O # Sec MIN	RAMP CONTROLLER – LIMITS THE RATE OF CHANGE OF AN OUTPUT ON AN INCREASE IN VALUE OR A DECREASE IN VALUE. CHNG% – % OF TOTAL MAXIMUM OUTPUT VALUE ALLOWED FOR OUTPUT CHANGE # = TIME IN SECONDS MAX = MAXIMUM OUTPUT VALUE MIN = MINIMUM OUTPUT VALUE
TMR I O 2HRT	TIMER – OUTPUT IS ON FOR A USER SPECIFIED TIME AFTER INPUT CHANGES FROM OFF TO ON
ATS I O OVRT flag	AUTOMATIC TIME SCHEDULER – INCLUDES SCHEDULES ENTERED INTO CONTROLLER FOR 7 DAY SCHEDULING WITH HOLIDAYS AND OVERRIDE SCHEDULES. INCLUDES OVERRIDE INPUT FOR UNSCHEDULED OVERRIDE. OUTPUTS REFERENCE FLAGS CAN INCLUDE : HEATING SETBACK, COOLING SETBACK, AND UNOCCUPIED
OS/S I O OVRT flag	OPTIMUM START/STOP TIME SCHEDULER – INCLUDES SCHEDULES ENTERED INTO CONTROLLER FOR 7 DAY SCHEDULING WITH HOLIDAYS AND OVERRIDE SCHEDULES. INCLUDES OPTIMUM START STOP ROUTINE. OUTPUTS REFERENCE FLAGS CAN INCLUDE : WARM–UP, COOL–DOWN, HEATING SETBACK, COOLING SETBACK, AND UNOCCUPIED. INCLUDES OVERRIDE INPUT (OVR) FOR UNSCHEDULED OVERRIDE
I CALC O	CALCULATION BLOCK – OUTPUT IS EQUAL TO CALCULATION USING INPUT(S). EQUATION CAN BE MATHEMATICAL OR A PREDEFINED INDUSTRY STANDARD ALGORITHM (ie. CFM, VELOCITY PRESSURE, ENTHALPY, DEW POINT ETC.)
HI	HIGH SELECTOR – SELECTS HIGHER OF INPUT VALUES
LO	LOW SELECTOR – SELECTS LOWER OF INPUT VALUES
AVE	AVERAGING BLOCK – MATHEMATICALLY AVERAGES INPUT VALUES.
DLY MTR COM PROOF RST ALM NML	PROOFING MODULE – GENERATES VALUES BASED ON A COMPARISON OF COMMAND AND MONITORING INPUTS. DLY – PROOFING DELAY PERIOD MTR – MONITOR (INPUT FOR PROOF) COM – COMMAND (INPUT FOR PROOF) RST – RESET (IF LATCHING IS USED) ALM – (ON WHEN MONITOR INPUT IS NOT EQUAL TO COMMAND INPUT) NML – OUTPUT IS ON WHEN MONITOR AND COMMAND INPUTS ARE ON AND NORMAL CONDITIONS ARE MET
	TIME AVERAGE BLOCK – OUTPUT IS EQUAL TO SUM OF INPUTS FROM USER SPECIFIED PREVIOUS TIME PERIOD (OR NUMBER OF SCANS) TO CURRENT TIME (OR SCAN) DIVIDED BY NUMBER OF DISCRETE POINTS IN THE SUMMATION PERIOD. OUTPUT IS A ROLLING TIME BASED AVERAGE OF THE INPUT VALUE.
REQUEST ALCK BLCK CLCK DLCK STAGER A B C D ROTATE	STAGER BLOCK – OUTPUT IS EQUAL TO SUM OF REQUESTS FROM USER SPECIFIED INPUTS. ROTATION SHALL BE DETERMINED BY USER DEFINED PARAMETERS. EACH INDIVIDUAL OUTPUT CAN BE LOCKED OUT BY USER DEFINED INDIVIDUAL INPUTS. LOCKED OUT OUTPUTS SHALL BE SKIPPED IN ROTATION. (SEE SEQUENCE OF OPERATION FOR DETAILS)
PWR ACK SWAP OUTA FAILA FAILB OUTB LEAD/STANDBY	LEAD/STANDBY BLOCK – ON RUN COMMAND, LEAD OUTPUT IS SELECTED. LEAD OUTPUT CAN BE SWAPPED MANUALLY OR BY A TIME SCHEDULE. WHEN THE LEAD EQUIPMENT FAILS, THE STANDBY OUTPUT IS SELECTED. (SEE SEQUENCE OF OPERATION FOR DETAILS)

GENERAL COORDINATION NOTES:

1. ALL CONTROL SYSTEMS RELAYS, TRANSFORMERS, POWER SUPPLIES, AND OTHER COMPONENTS WHICH REQUIRE 120V POWER SHALL BE CONSOLIDATED IN CONTROL PANELS UNLESS SPECIFICALLY GRANTED OTHERWISE BY DESIGNER OR WHERE CONTROLLERS ARE INTEGRAL TO THE CONTROLLED DEVICE AND ARE UNIT–MOUNTED (E.G. PACKAGED FCU CONTROLLERS).
2. CONTROL PANELS SHALL BE LOCATED AS SHOWN ON DRAWINGS, OR SHALL BE COORDINATED WITH DESIGNER PRIOR TO INSTALLATION. WHERE ADDITIONAL CONTROL PANELS ARE REQUIRED THEY SHALL BE LOCATED IN VICINITY OF CONTROL PANELS AS SHOWN ON CONSTRUCTION DOCUMENTS. WHERE SIDE–BY–SIDE MOUNTING OF MULTIPLE CONTROL PANELS OF THE SAME TYPE IS NOT FEASIBLE, PANELS SHALL BE STACKED ONE ABOVE THE OTHER WITH AN INVERTED 'L' WIRING GUTTER FOR CONTROL WIRE ROUTING.
3. THE CONTROLS CONTRACTOR SHALL COORDINATE LOCATIONS AND POWER REQUIREMENTS WITH THE DESIGNER UPON DETERMINATION OF REQUIREMENT FOR ADDITIONAL CONTROL PANELS OR CIRCUITS.
4. WHERE LOCATIONS OR NUMBER OF CONTROL PANELS VARIES FROM THOSE INDICATED ON CONSTRUCTION DOCUMENTS, THEY SHALL BE LOCATED ON A FLOOR PLAN AND SUBMITTED WITH SHOP DRAWINGS DURING THE SHOP DRAWING/SUBMITTAL PROCESS.
5. WHERE EQUIPMENT FROM MULTIPLE VENDORS SHARE UTILITY CORRIDORS, CLOSETS, RACKS, AND/OR CABLE TRAYS, EQUIPMENT AND PANEL LOCATIONS SHALL BE COORDINATED. LOW VOLTAGE SENSOR OR CONTROL CABLE INSTALLED IN COMMON CABLE TRAYS SHALL HAVE UNIQUE JACKET COLOR BASED ON THE SYSTEM UNDER CONTROL. SUCH UNIQUE SYSTEMS MAY INCLUDE, BUT NOT BE LIMITED TO: BUILDING AUTOMATION, ACCESS CONTROL/SECURITY, AND TELEMETRY

CONTROL SYMBOLS

SYMBOL	DESCRIPTION	SYMBOL	DESCRIPTION
AI POINT NAME POINT NAME AO	DDC POINT DESCRIPTOR WITH NAME AI – ANALOG INPUT DI – DIGITAL INPUT AO – ANALOG OUTPUT DO – DIGITAL OUTPUT		DISCONNECT SWITCH
TS1	TEMPERATURE SENSOR WITH AVERAGING ELEMENT	480V 120V	CONTROL TRANSFORMER
TS1	TEMPERATURE SENSOR WITH SINGLE POINT ELEMENT	MS EP1 S	RELAY COILS
TS1	TEMPERATURE SENSOR WITH PIPE WELL		FUSE
TS1	SPACE TEMPERATURE SENSOR	OL	THERMAL OVERLOAD
HS1	HUMIDITY SENSOR		NORMALLY OPEN AND NORMALLY CLOSED CONTACTS
	CURRENT SENSOR	HAND AUTO OFF	HAND–OFF–AUTO SELECTOR SWITCH
SD1	SMOKE DETECTOR		WIRING DESIGNATION. (NO. OF HATCHES INDICATES NO. OF CONDUCTORS)
DPS2	DIFFERENTIAL PRESSURE SWITCH		WIRING CONNECTION
FS1	WATER FLOW SWITCH	ON–OFF	ON–OFF SELECTOR SWITCH
V1 N.C.	TWO WAY CONTROL VALVE	V2 C. N.C. N.O.	THREE WAY CONTROL VALVE
D1	DAMPER ACTUATOR	LS1	LIMIT SWITCH
DPT1 0–5" w.c.	AIR DIFFERENTIAL PRESSURE TRANSMITTER (0 – 5" RANGE)	D–1	CONTROL DAMPER
VSD	VARIABLE SPEED DRIVE	DP	HYDRONIC DIFFERENTIAL PRESSURE TRANSMITTER
FZ	FREEZESTAT	FM1	HYDRONIC FLOWMETER
AFMS1	AIRFLOW MEASURING STATION	TS1	THERMOSTAT
AFMS1	FAN INLET AIRFLOW MEASURING STATION	EPT	ELECTRO–PNEUMATIC TRANSDUCER

ABBREVIATIONS

ALM	ALARM	NC	NORMALLY CLOSED
AH	AIR HANDLER	NO	NORMALLY OPEN
BLDG	BUILDING	OA	OUTSIDE AIR
C	COMMON	OVRD	OVERRIDE
CL	COOL	RA	RETURN AIR
CHPS	CHILLED WATER PUMP, SECONDARY	REQ	REQUEST
CHWP	CHILLED WATER PUMP	RF	RETURN FAN
CHWR	CHILLED WATER RETURN	RH	RELATIVE HUMIDITY
CHWS	CHILLED WATER SUPPLY	RLF	RELIEF FAN
CW	CONDENSER WATER	S/S	START / STOP
CWP	CONDENSER WATER PUMP	SA	SUPPLY AIR
CWR	CONDENSER WATER RETURN	SD	SMOKE DETECTOR
CWS	CONDENSER WATER SUPPLY	SEC	SECONDARY OR SECONDS
DD	DOWN–DUCT	SF	SUPPLY FAN
DP	DIFFERENTIAL PRESSURE	SCHWR	SECONDARY CHILLED WATER RETURN
EF	EXHAUST FAN	SCHWS	SECONDARY CHILLED WATER SUPPLY
FBK	FEEDBACK	SHWR	SECONDARY HOT WATER RETURN
FC	FAN COIL	SHWS	SECONDARY HOT WATER SUPPLY
HOA	HAND – OFF – AUTOMATIC	T	TEMPERATURE
HT	HEAT	TB	TERMINAL BOX
HWP	HOT WATER PUMP	TW	TEMPERED WATER
HWPS	HOT WATER PUMP, SECONDARY	TWP	TEMPERED WATER PUMP
HWR	HOT WATER RETURN	TWR	TEMPERED WATER RETURN
HWS	HOT WATER SUPPLY	TWS	TEMPERED WATER SUPPLY
ISO	ISOLATION	VP	VELOCITY PRESSURE
MA	MIXED AIR	VSD	VARIABLE SPEED DRIVE
		VHP	VAPORIZED HYDROGEN PEROXIDE

LEGEND

DESIGNATIONS	DESCRIPTION
	TUBING / BRANCH CONTROL AIR
M	20 PSIG MAIN CONTROL AIR
	WIRING

Wagner Architecture, pllc
92 ELAM COURT
NEW HILL, NORTH CAROLINA 27562
TEL. (919) 612.5050

Kramer Engineering Services, pllc
5517 Cascade Dr Chapel Hill, NC 27514
TEL (919)933-3350
email: donna@kespllc.com
Firm license: P-1099

bennett&pless
formerly LHC STRUCTURAL ENGINEERS

NV5 ENGINEERS AND CONSULTANTS, INC.
3300 REGENCY PARKWAY, STE 100
CARY, NC 27518
P: 919.851.1912 www.NV5.com
NC License # F-1333
formerly CALYX Engineers + Consultants

NORTH CAROLINA PROFESSIONAL SEAL 14917 ENGINEER DONNA D. KRAMER 2023

PREPARED FOR
NORTH CAROLINA STATE UNIVERSITY
COLLEGE OF VETERINARY MEDICINE

TRANSLATIONAL RESEARCH FACILITY

revisions

building number

cadd file number

drawn by EAP

checked by DDK

date ISSUED FOR CONSTRUCTION – 05/18/23

project number

NCSU CODE: 42124
ITEM: 305
WA 202207
SCO#: 21–24030–01A

HVAC CONTROLS LEGEND

sheet number: M601

revision number:

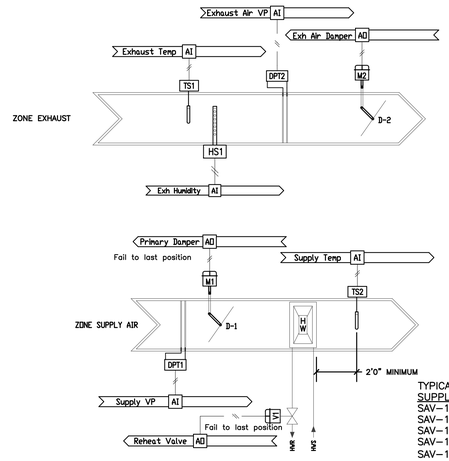

TYPICAL OF MATCHING PAIRS:

SUPPLY	EXHAUST	ROOM
SAV-105	GEV-105	HOLDING 105
SAV-106	GEV-106	SUPPORT 106
SAV-110	GEV-110	HOLDING 110
SAV-107A	GEV-107A	SURGERY 107A
SAV-111	GEV-110	INDUCTION/RECOVERY 111

AIR VALVE WITH HW REHEAT & FLOW MATCHING

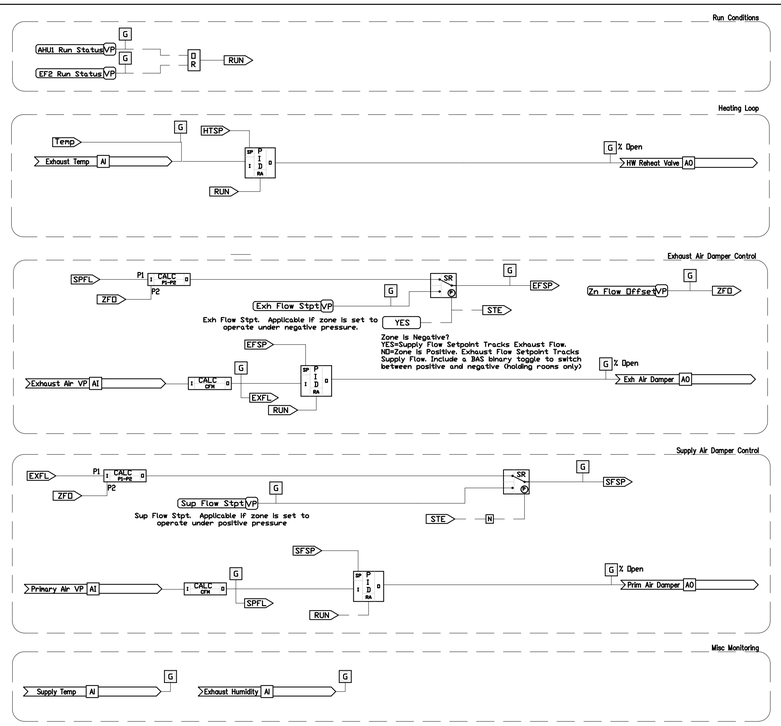

LOGIC DIAGRAMS FOR AIR VALVE WITH HOT WATER REHEAT AND FLOW MATCHING

POINTS LIST

ADDRESS	POINT DESCRIPTOR	DI	AI	DO	AO	VP	REMARKS
	Space Temp		•				Located in Exhaust
	Prim Air Damper				•		
	Primary Air VP		•				
	Supply Air Temp		•				
	HW Reheat Valve				•		
	Setpoint Adjust		•				Where Applicable
	Space Humidity		•				Located in Exhaust
	Exh Air Damper				•		
	Exhaust Air VP		•				

LOGIC VARIABLES

BINARY	ANALOG	DESCRIPTION
RUN		ON WHEN AHU-1 OR EF-2 ARE PROVE ON
	Temp	VARIABLE VALUE OF SPACE TEMPERATURE
	HTSP	HEATING SETPOINT
	EFSP	VARIABLE CALCULATED VALUE OF ACTIVE EXHAUST FLOW SETPOINT
	SFSP	VARIABLE CALCULATED VALUE OF ACTIVE SUPPLY FLOW SETPOINT
STE		SUPPLY TRACKS EXHAUST; ON WHEN ROOM IS SET FOR NEGATIVE AIRFLOW
	ZFD	ZONE FLOW OFFSET

NOTES REGARDING FLOW TRACKING:

1. Refer to sheet M101 for positive or negative airflow direction. Refer to air valve schedule on sheet M401 for zone tracking flow offset. The two holding rooms may switch between negative and positive.
2. When a zone is negative, the supply flow setpoint will track the exhaust flow (minus the zone offset). The exhaust flow setpoint will be set to the normal setpoint indicated on the exhaust air valve schedule.
3. When a zone is positive, the supply air setpoint will be the normal setpoint indicated on the terminal unit schedule and the exhaust flow setpoint will track the supply flow (minus an offset).
4. Dampers and hot water valves shall fail to last position.
5. GEV-100A exhaust air valve setpoint varies based on the number of holding rooms that are positive of negative. Refer to air valve schedule.

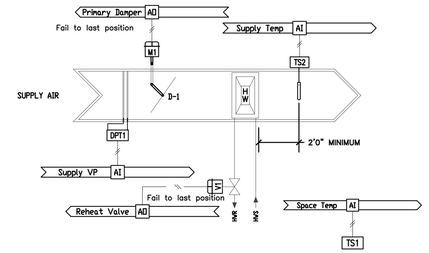

TYPICAL OF:
SAV-101, ELECTRICAL RM 101/VESTIBULE

ADDRESS	POINT DESCRIPTOR	DI	AI	DO	AO	VP	REMARKS
	Space Temp		•				
	Supply VP		•				
	Primary Damper				•		
	Supply Temp		•				
	Reheat Valve				•		

LOGIC VARIABLES

BINARY	ANALOG	DESCRIPTION
Run		ON WHEN AHU-1 OR EF-2 ARE PROVE ON
	Temp	VARIABLE VALUE OF SPACE TEMPERATURE
	HTSP	HEATING SETPOINT
	HPCT	VARIABLE VALUE OF HEATING LOOP OUTPUT %
	SPxFL	VARIABLE CALCULATED VALUE OF SUPPLY FLOW (CFM) FOR SUPPLY VALVE x
	ZSSP	ZONE SUPPLY SETPOINT (CFM) FOR AIR VALVE

CONSTANT VOLUME AIR VALVE WITH HW REHEAT

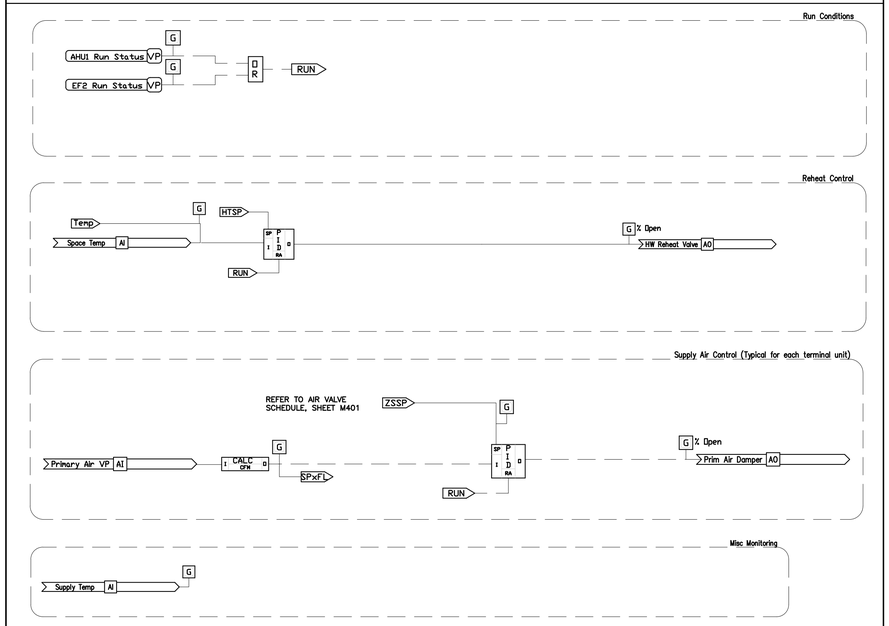

LOGIC DIAGRAMS FOR AIR VALVE WITH HOT WATER REHEAT

Wagner Architecture, pllc
92 ELAM COURT
NEW HILL, NORTH CAROLINA 27562
TEL. (919) 612.5050

Kramer Engineering Services, pllc
5517 Cascade Dr Chapel Hill, NC 27514
TEL (919)933-3350
email: donna@kespllc.com
Firm license: P-1099

bennett&pless
formerly LHC STRUCTURAL ENGINEERS

NV5
NV5 ENGINEERS AND CONSULTANTS, INC.
3300 REGENCY PARKWAY, STE 100
CARY, NC 27518
P: 919.851.1912 www.NV5.com
NC License # F-1333
formerly CALYX Engineers + Consultants

NORTH CAROLINA PROFESSIONAL SEAL 14917 ENGINEER DONNA D. KRAMER 2023

PREPARED FOR
NORTH CAROLINA STATE UNIVERSITY
COLLEGE OF VETERINARY MEDICINE

TRANSLATIONAL RESEARCH FACILITY

revisions

building number

cadd file number

drawn by EAP

checked by DDK

date ISSUED FOR CONSTRUCTION – 05/18/23

project number
NCSU CODE: 42124
ITEM: 305
WA 202207
SCO#: 21-24030-01A

HVAC CONTROLS - AIR VALVES WITH HOT WATER REHEAT

sheet number: M602

revision number:

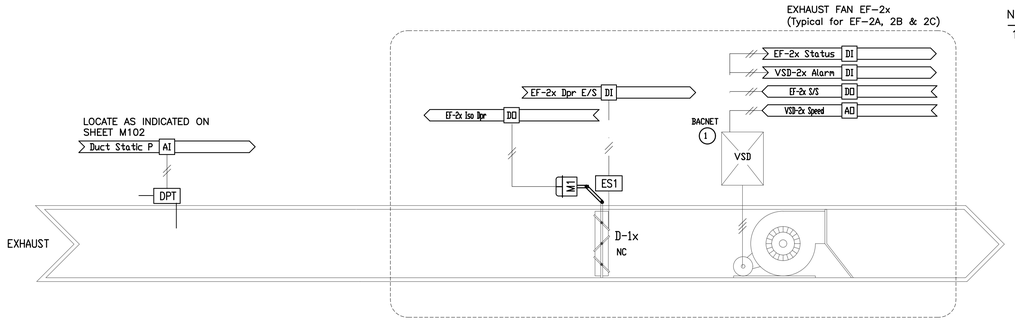

NOTES

1. Provide BacNet communications interface to the control system for diagnostic point information including: VSD fault, VSD Fault Code, VSD Feedback, VSD KW, VSD KWH, and VSD Bypass.

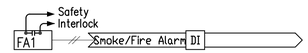

VIVARIUM EXHAUST FANS EF-2A, 2B & 2C

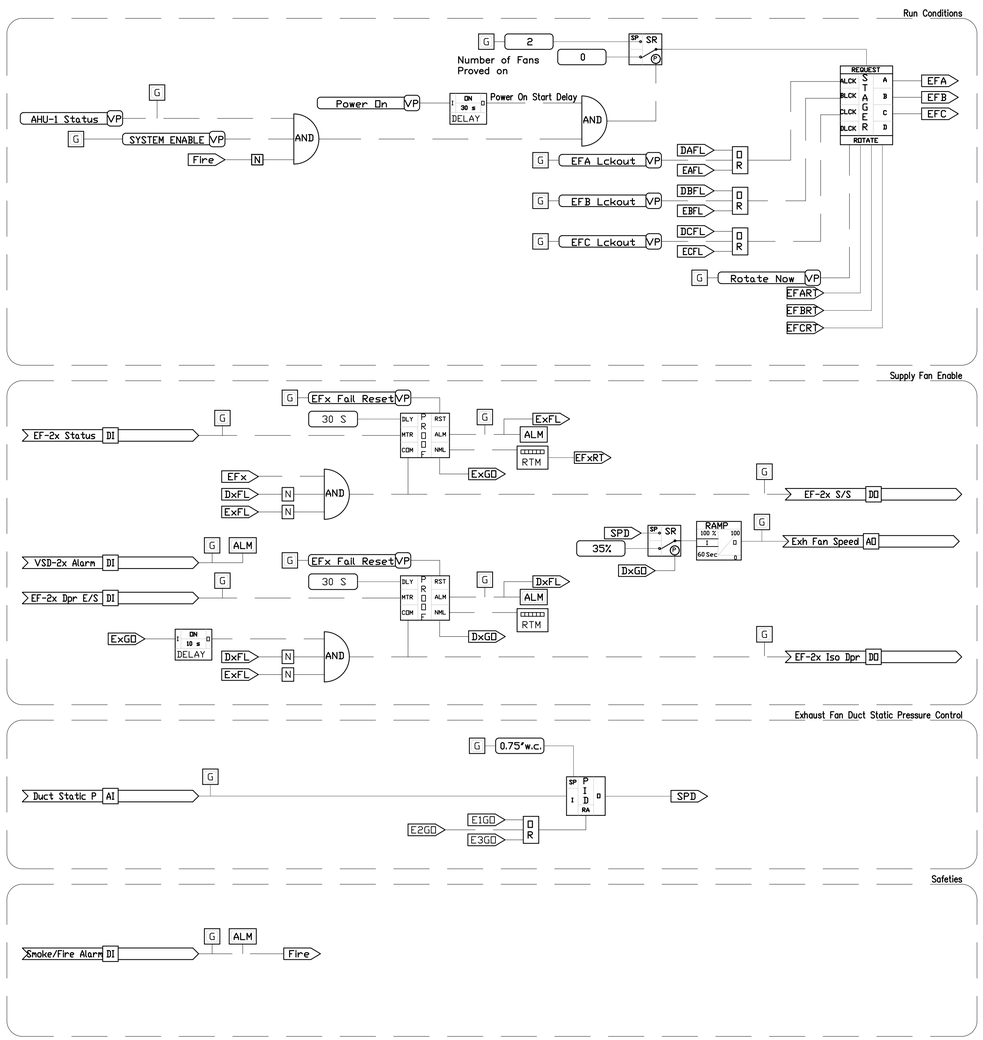

VIVARIUM EXHAUST FANS EF-2A, -2B, AND -2C; VARIABLE SPEED

Software Logic Diagrams

POINTS LIST

ADDRESS	POINT DESCRIPTOR	DI	AI	DO	AO	VP	REMARKS
	EF-2x S/S			•			Typ each EF Fan
	EF-2x Status	•					Typ each EF Fan
	VSD-2x Speed	•					Typ each VSD
	VSD-2x Speed				•		Typ each VSD
	EF-2x Dpr E/S	•					Typ each EF Fan
	EF-2x Iso Dpr			•			Typ each EF Fan
	Duct Static Pres		•				Vivarium Gen Exh System
	Smoke/Fire Alarm	•					

LOGIC VARIABLES

BINARY	ANALOG	DESCRIPTION
RUN		ON WHEN UNIT REQUESTED TO START
SysGO		ON WHEN THE EXHAUST SYSTEM IS ENABLED
SGO		ON WHEN AHU-1 SUPPLY FAN ENERGIZED AND STATUS PROVEN
Fire		ON WHEN FIRE ALARM IS ACTIVE
EFx		ON WHEN EXHAUST FANx IS REQUESTED TO RUN
ExFL		ON WHEN EXHAUST FANx PROOF HAS FAILED
ExGO		ON WHEN EXHAUST FANx IS COMMANDED AND PROVEN ON
DxFL		ON WHEN ISOLATION DAMPERx PROOF HAS FAILED
DxGO		ON WHEN ISOLATION DAMPERx IS COMMANDED AND PROVEN OPEN
ExPF		ON WHEN EXHAUST FANx IS PROVEN ON
	SPD	VARIABLE CALCULATED LOOP OUTPUT VALUE FOR VSD SPEED
	EFxRT	VARIABLE CALCULATED VALUE FOR EXHAUST FAN x RUNTIME

ELECTRIC LADDER DIAGRAMS

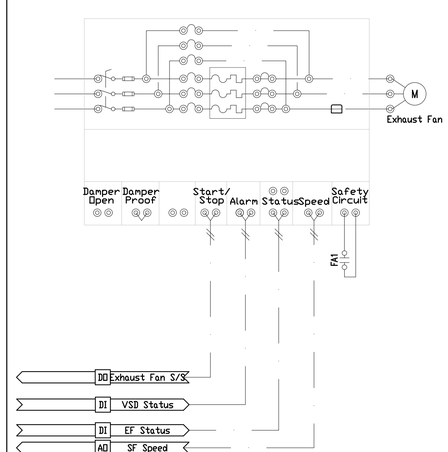

EXHAUST FAN VSD- TYPICAL OF THREE

Wagner Architecture, pllc
92 ELAM COURT
NEW HILL, NORTH CAROLINA 27562
TEL. (919) 612.5050

Kramer Engineering Services, pllc
5517 Cascade Dr Chapel Hill, NC 27514
TEL (919)933-3350
email: donna@kespllc.com
Firm license: P-1099

bennett&pless
formerly LHC STRUCTURAL ENGINEERS

NV5
NV5 ENGINEERS AND CONSULTANTS, INC.
3300 REGENCY PARKWAY, STE 100
CARY, NC 27518
P: 919.851.1912 www.NV5.com
NC License # F-1333
formerly CALYX Engineers + Consultants

NORTH CAROLINA PROFESSIONAL SEAL 14917 ENGINEER DONNA D. KRAMER 2023

PREPARED FOR
NORTH CAROLINA STATE UNIVERSITY
COLLEGE OF VETERINARY MEDICINE

TRANSLATIONAL RESEARCH FACILITY

revisions

building number

cadd file number

drawn by: EAP

checked by: DDK

date: ISSUED FOR CONSTRUCTION – 05/18/23

project number: NCSU CODE: 42124
ITEM: 305
WA 202207
SCO#: 21-24030-01A

HVAC CONTROLS - EXHAUST SYSTEM

sheet number: M603

revision number:

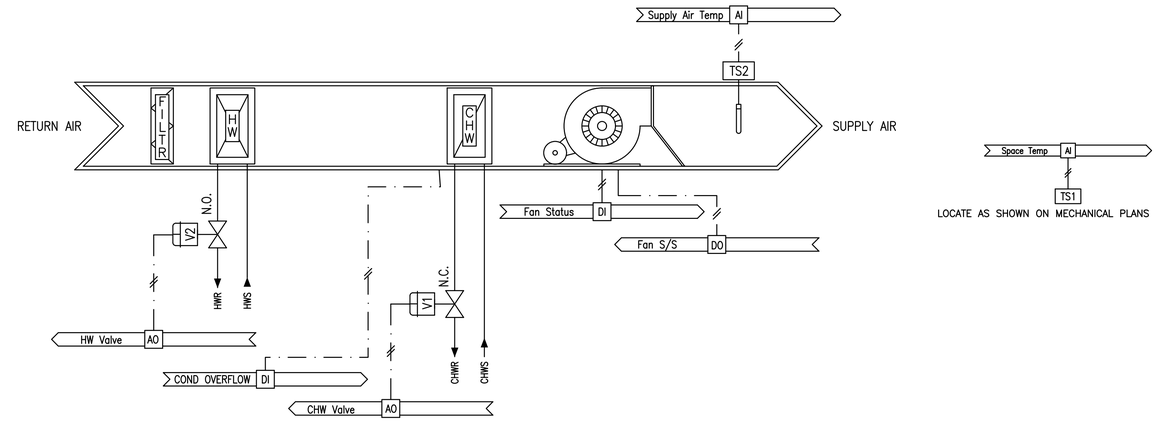

HEATING/COOLING FAN COIL UNITS

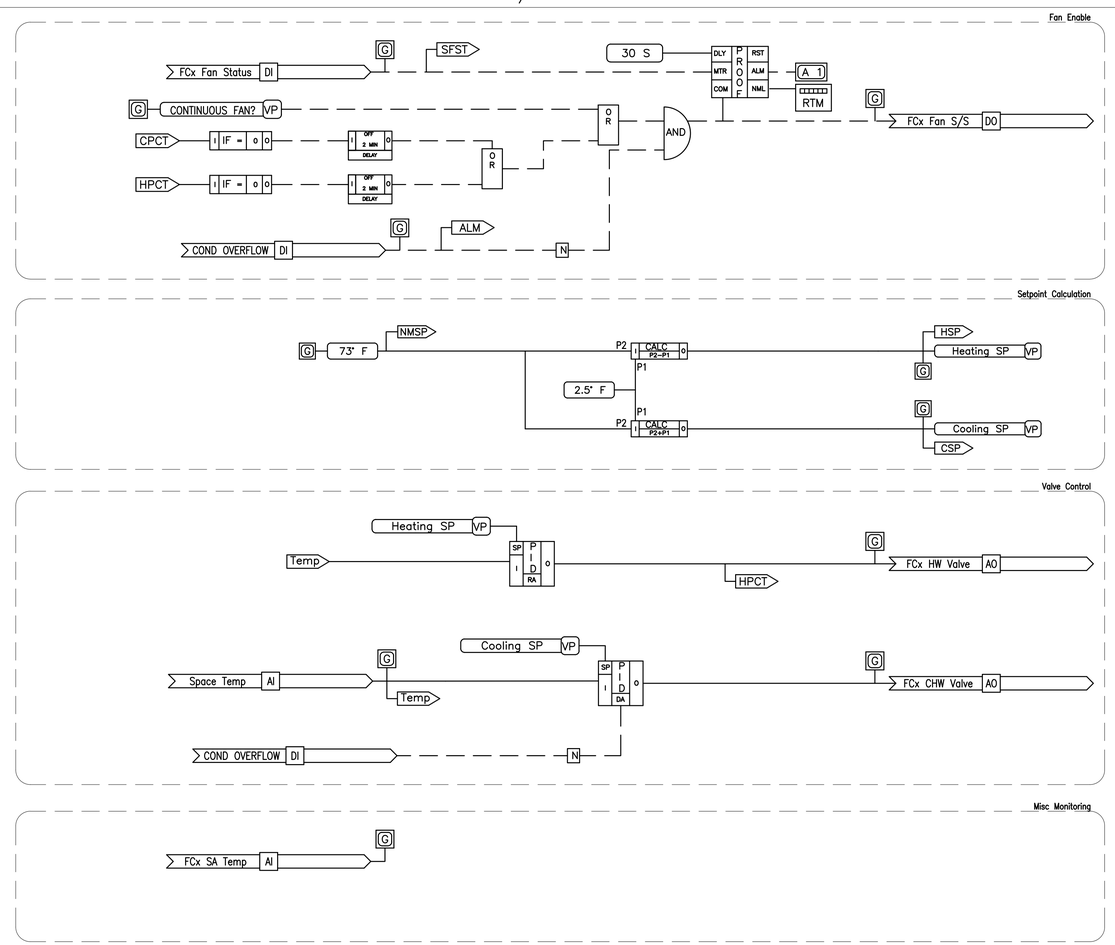

POINTS LIST

ADDRESS	POINT DESCRIPTOR	POINT TYPE DI	AI	DO	AO	VP	REMARKS
	Space Temp		•				
	CHW Valve				•		
	Supply Air Temp		•				
	HW Valve				•		
	Fan S/S			•			
	Fan Status	•					
	FCU Supply Air T		•				
	Condensate Overflow	•					

LOGIC VARIABLES

BINARY	ANALOG	DESCRIPTION
	Temp	VARIABLE VALUE OF SPACE TEMPERATURE
	CSP	VARIABLE VALUE OF COOLING SET POINT
	HSP	VARIABLE VALUE OF HEATING SET POINT
	NMSP	VARIABLE VALUE OF NOMINAL SET POINT
	HPCT	VARIABLE VALUE OF HEATING OUTPUT %
	CPCT	VARIABLE VALUE OF COOLING OUTPUT %
SFST		ON WHEN FAN STATUS IS ON
ALM		ON WHEN IN ALARM

ELECTRIC LADDER DIAGRAM

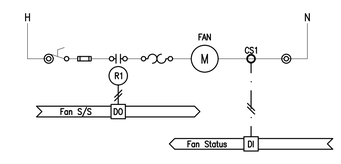

Software Logic Diagram

Wagner Architecture, pllc
92 ELAM COURT
NEW HILL, NORTH CAROLINA 27562
TEL. (919) 612.5050

Kramer Engineering Services, pllc
5517 Cascade Dr Chapel Hill, NC 27514
TEL (919)933-3350
email: donna@kespllc.com
Firm license: P-1099

bennett&pless
formerly LHC STRUCTURAL ENGINEERS

NV5 ENGINEERS AND CONSULTANTS, INC.
3300 REGENCY PARKWAY, STE 100
CARY, NC 27518
P: 919.851.1912 www.NV5.com
NC License # F-1313
formerly CALYX Engineers + Consultants

NORTH CAROLINA PROFESSIONAL SEAL 14917 ENGINEER DONNA D. KRAMER 2023

PREPARED FOR
NORTH CAROLINA STATE UNIVERSITY
COLLEGE OF VETERINARY MEDICINE

TRANSLATIONAL RESEARCH FACILITY

revisions

building number

cadd file number

drawn by EAP

checked by DDK

date ISSUED FOR CONSTRUCTION – 05/18/23

project number
NCSU CODE: 42124
ITEM: 305
WA 202207
SCO#: 21–24030–01A

HVAC CONTROLS - FAN COIL UNITS

sheet number: M604

revision number:

NOTES

1. Provide multiple Freezestats as required to achieve 1 ft of element for each 1 sq.ft of coil face area.
2. Provide communications interface to the control system for diagnostic point information including: VSD fault, VSD Fault Code, VSD Feedback, VSD KW, VSD KWH, and VSD Bypass.
3. Set Supply Isolation Damper end switches to make at ~50% open. Adjust as necessary to limit backspin of one supply fan that is starting with the other already running.

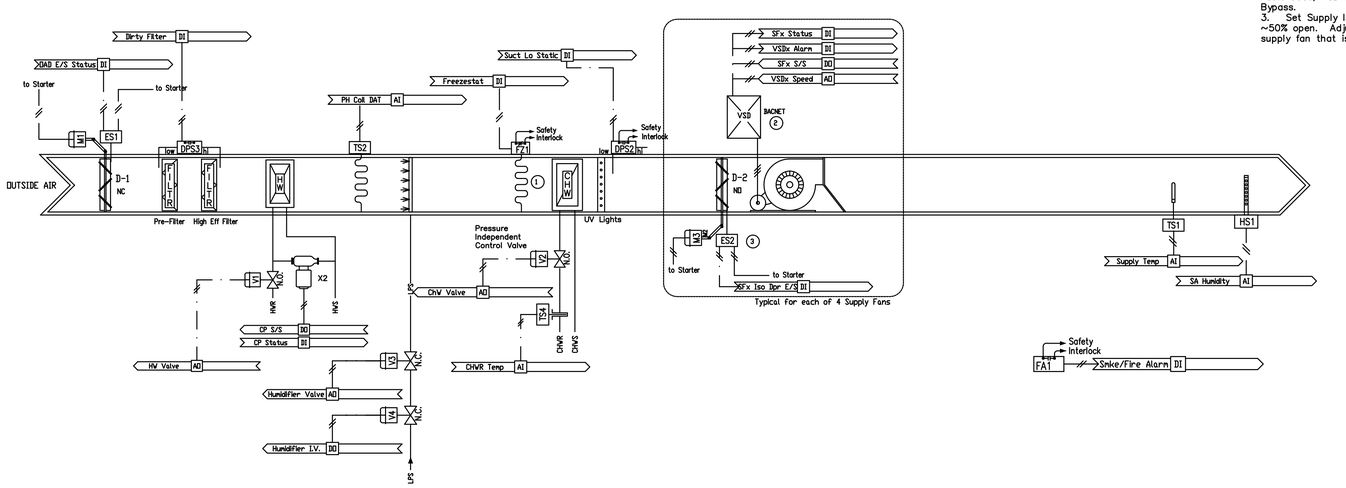

100% OA AHU WITH HW PREHEAT, STEAM HUMIDIFIER AND CHW COIL

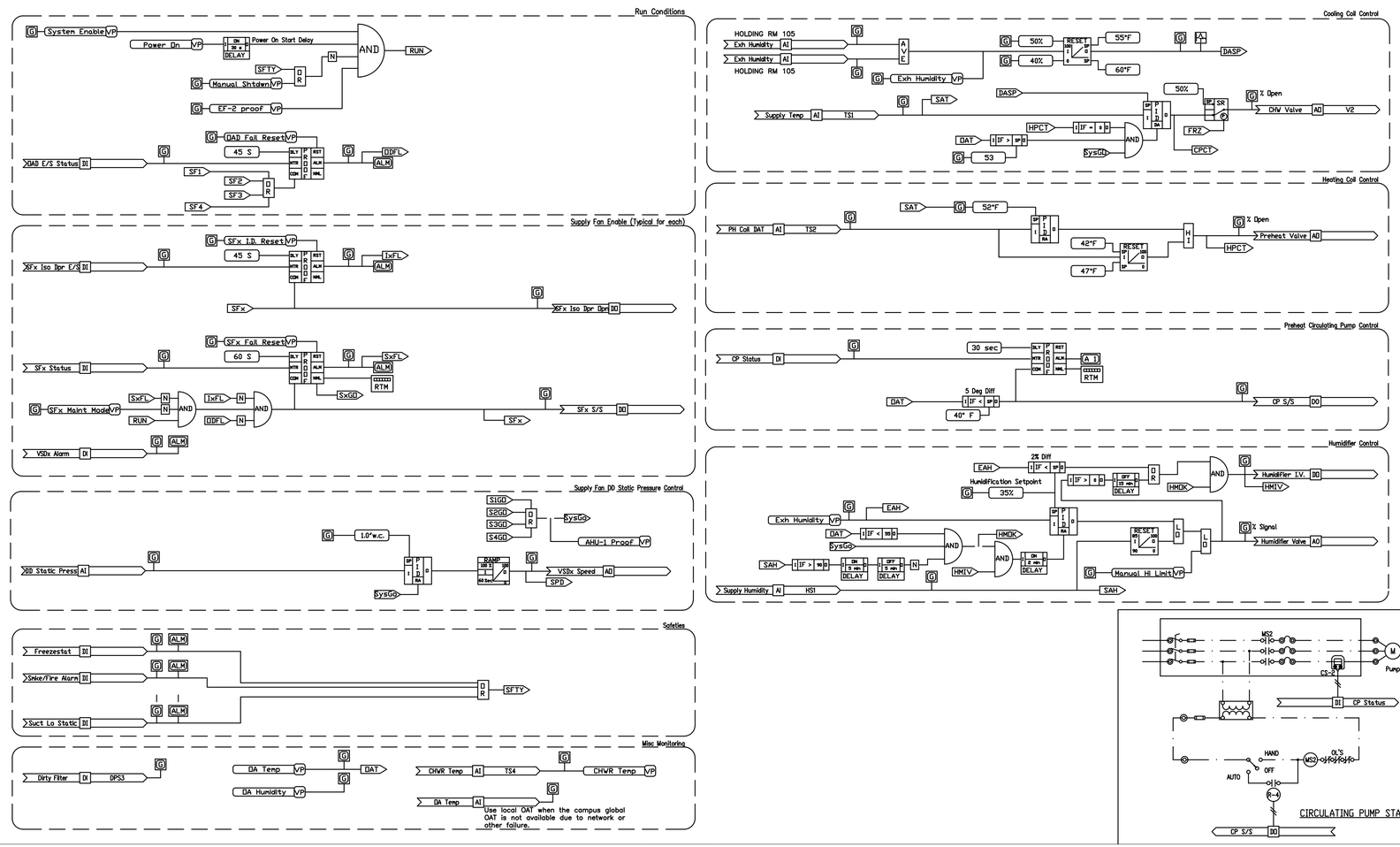

Software Logic Diagram

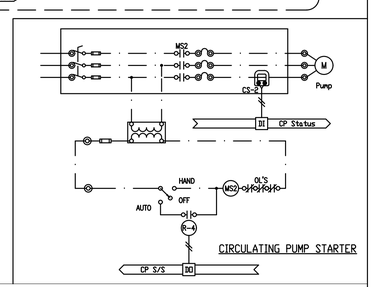

CIRCULATING PUMP STARTER

POINTS LIST

ADDRESS	POINT DESCRIPTOR	DI	AI	DO	AO	VP	REMARKS
	SFx S/S			•			Typ each SF Fan
	SFx Status	•					Typ each SF Fan
	VSDx Alarm	•					Typ each VSD
	VSDx Speed				•		Typ each VSD
	SFx Airflow		•				Typ each SF Fan
	Supply Temp		•				
	PH Coil DAT		•				
	Freezestat	•					
	OAD E/S Status	•					
	CHWR Temp		•				
	CHW Valve				•		
	HW Valve				•		
	Smoke/Fire Alarm	•					
	SFx Iso Dpr E/S	•					Typ each SF Fan
	Suction Low Static	•					
	Discharge Hi Static	•					
	Exh Humidity		•				Holding Rm 105
	Exh Humidity		•				Holding Rm 110
	Duct Static Pressure		•				
	HWP-2 S/S			•			Preheat Coil Circ Pump
	HWP-2 STATUS	•					Preheat Coil Circ Pump
	Make-up water FS	•					
	Supply Air RH		•				
	Dirty Filter	•					

LOGIC VARIABLES

BINARY	ANALOG	DESCRIPTION
RUN		ON WHEN UNIT COMMANDED TO START
SysGD		ON WHEN AT LEAST ONE SF IS COMMANDED AND PROVEN ON
DDFL		ON WHEN THE OA DAMPER PROOF HAS FAILED
SxFL		ON WHEN SFx PROOF HAS FAILED
IxFL		ON WHEN SFx ISOLATION DAMPER PROOF HAS FAILED
SFx		ON WHEN AT SFx IS COMMANDED ON
SxGD		ON WHEN AT SFx IS COMMANDED AND PROVEN ON
Fire		ON WHEN FIRE ALARM IS ACTIVE
SFTY		ON WHEN "FRZ", "Fire" OR "PRS" ARE ON and EF24 IS "OFF"
	DAT	VARIABLE VALUE OF OUTSIDE AIR TEMPERATURE
	SAT	VARIABLE VALUE OF SUPPLY AIR TEMPERATURE
	SPD	VARIABLE CALCULATE VALUE VSD SPEED LOOP OUTPUT
	CPCT	VALUE OF CHV COMMANDED VALVE % OPEN
	HPCT	VALUE OF PREHEATING COMMANDED VALVE % OPEN
	EAH	VARIABLE VALUE OF EXHAUST AIR HUMIDITY
	DASP	VALUE OF DISCHARGE AIR SETPOINT
	SAH	VARIABLE VALUE OF SUPPLY AIR HUMIDITY
	EAH	VARIABLE VALUE OF EXHAUST AIR HUMIDITY
HMDK		ON WHEN HUMIDIFIER ENABLED
HMIV		ON WHEN HUMIDIFIER ISOLATION VALVE COMMANDED OPEN

ELECTRIC LADDER DIAGRAMS

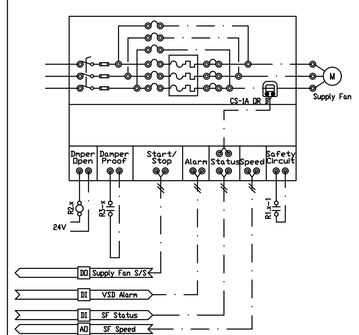

SUPPLY FAN VSD- TYPICAL OF TWO

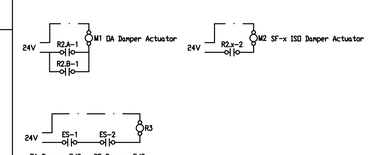

DAMPER INTERLOCK/ RELAY LOGIC

SAFETY INTERLOCK DETAIL

Wagner Architecture, pllc
92 ELAM COURT
NEW HILL, NORTH CAROLINA 27562
TEL. (919) 612.5050

Kramer Engineering Services, pllc
5517 Cascade Dr Chapel Hill, NC 27514
TEL (919)933-3350
email: donna@kespllc.com
Firm license: P-1099

bennett&pless
formerly LHC STRUCTURAL ENGINEERS

NV5 ENGINEERS AND CONSULTANTS, INC.
3300 REGENCY PARKWAY, STE 100
CARY, NC 27518
P: 919.851.1912 www.NV5.com
NC License # F-1333
formerly CALYX Engineers + Consultants

NORTH CAROLINA PROFESSIONAL SEAL 14917 ENGINEER DONNA D. KRAMER 2023

PREPARED FOR
NORTH CAROLINA STATE UNIVERSITY
COLLEGE OF VETERINARY MEDICINE

TRANSLATIONAL RESEARCH FACILITY

revisions

building number

cadd file number

drawn by EAP

checked by DDK

date ISSUED FOR CONSTRUCTION – 05/18/23

project number

NCSU CODE: 42124
ITEM: 305
WA 202207
SCO#: 21-24030-01A

HVAC CONTROLS - AIR HANDLING UNIT

sheet number: M605

revision number:

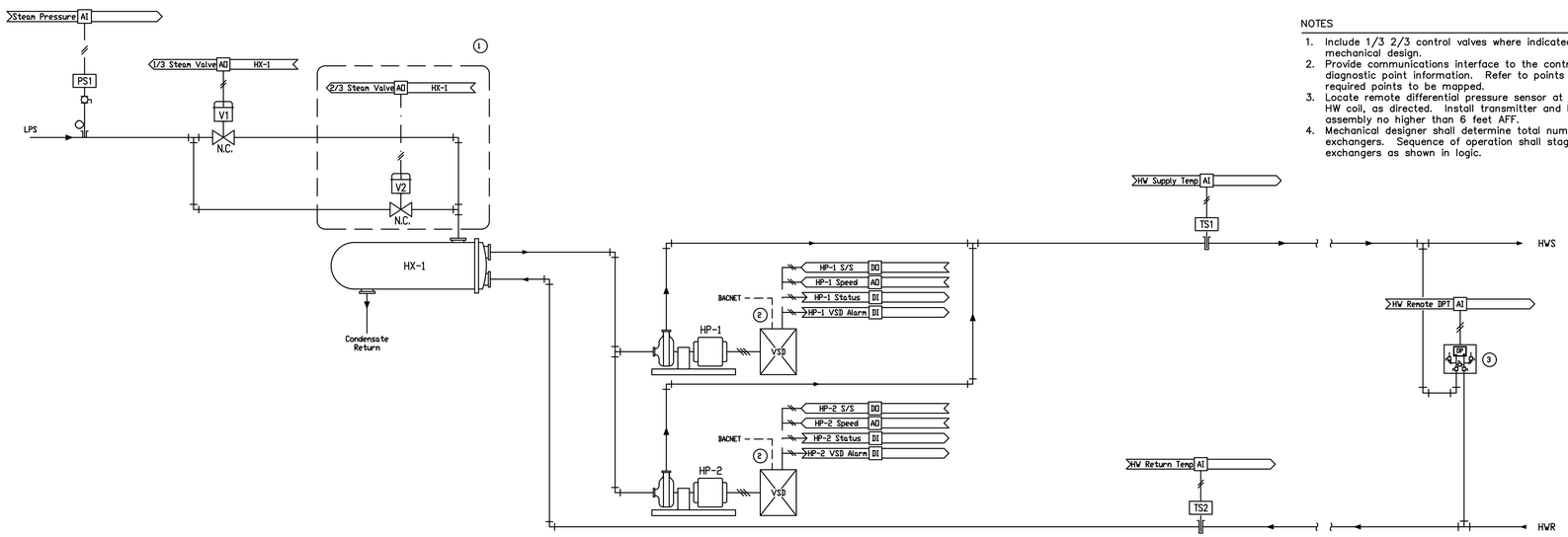

NOTES

1. Include 1/3 2/3 control valves where indicated on mechanical design.
2. Provide communications interface to the control system for diagnostic point information. Refer to points list for required points to be mapped.
3. Locate remote differential pressure sensor at most remote HW coil, as directed. Install transmitter and bypass assembly no higher than 6 feet AFF.
4. Mechanical designer shall determine total number of heat exchangers. Sequence of operation shall stage through exchangers as shown in logic.

POINTS LIST

ADDRESS	POINT DESCRIPTOR	DI	AI	DO	AO	VP	REMARKS
	1/3 Steam Valve				•		one per HX
	2/3 Steam Valve				•		one per HX
	HP-1 S/S			•			
	HP-1 Status	•					
	HP-1 Speed				•		
	HP-1 VSD Alarm	•					
	HP-2 S/S			•			
	HP-2 Status	•					
	HP-2 Speed				•		
	HP-2 VSD Alarm	•					
	HW Supply Temp		•				
	HW Return Temp		•				
	Steam Pressure		•				
	HW Remote DPT		•				

LOGIC VARIABLES

BINARY	ANALOG	DESCRIPTION
Sysgo		ON WHEN HEATING SYSTEM IS ENABLED
PxPF		ON WHEN PUMP x STATUS IS PROVEN
PxFL		ON WHEN PUMP x PROOF HAS FAILED
FLOW		ON WHEN EITHER PUMP IS PROVEN
Px		ON WHEN PUMP x IS COMMANDED TO RUN
	OAT	VARIABLE VALUE OF OUTDOOR AIR TEMPERATURE
	PxRT	VARIABLE VALUE OF PUMP x RUNTIME 0HHMM0
	HWSP	VARIABLE CALCULATED VALUE OF HOT WATER SUPPLY TEMPERATURE SETPOINT
	HWS	VARIABLE VALUE OF HOT WATER SUPPLY TEMPERATURE

STEAM TO HW CONVERTER WITH VARIABLE FLOW PUMPS

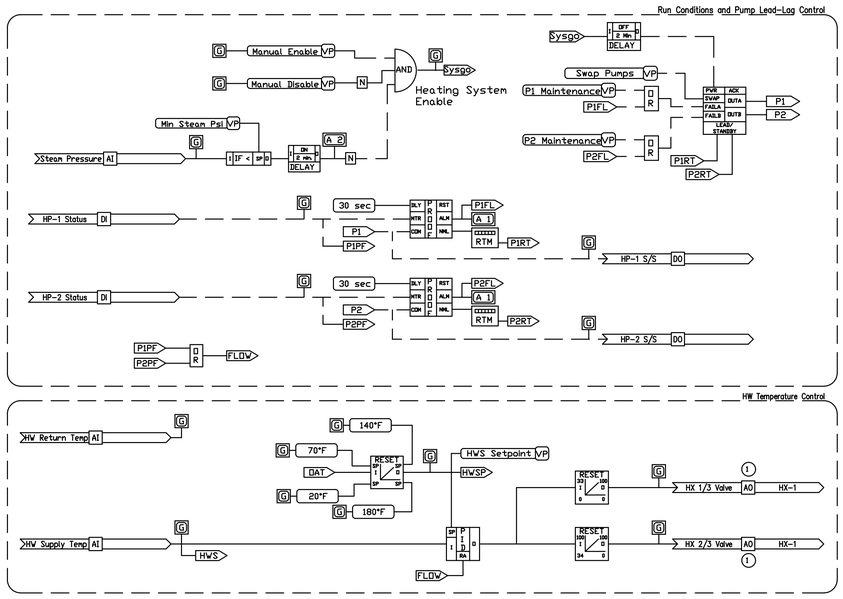

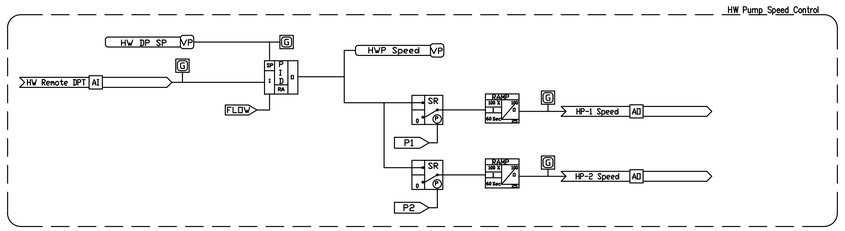

Software Logic Diagram

ELECTRIC LADDER DIAGRAMS

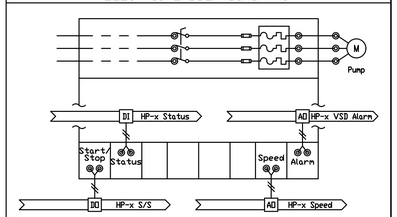

TYPICAL PUMP VSD

Wagner Architecture, pllc
92 ELAM COURT
NEW HILL, NORTH CAROLINA 27562
TEL. (919) 612.5050

Kramer Engineering Services, pllc
5517 Cascade Dr Chapel Hill, NC 27514
TEL (919)933-3350
email: donna@kespllc.com
Firm license: P-1099

bennett&pless
formerly LHC STRUCTURAL ENGINEERS

NV5
NV5 ENGINEERS AND CONSULTANTS, INC.
3300 REGENCY PARKWAY, STE 100
CARY, NC 27518
P: 919.851.1912 www.NV5.com
NC License # F-1333
formerly CALYX Engineers + Consultants

NORTH CAROLINA PROFESSIONAL SEAL 14917 ENGINEER DONNA D. KRAMER 2023

PREPARED FOR
NORTH CAROLINA STATE UNIVERSITY
COLLEGE OF VETERINARY MEDICINE

TRANSLATIONAL RESEARCH FACILITY

revisions

building number

cadd file number

drawn by: EAP

checked by: DDK

date: ISSUED FOR CONSTRUCTION – 05/18/23

project number: NCSU CODE: 42124 ITEM: 305 WA 202207 SCO#: 21–24030–01A

HVAC CONTROLS - HEATING HOT WATER CONTROLS

sheet number: M606

revision number:

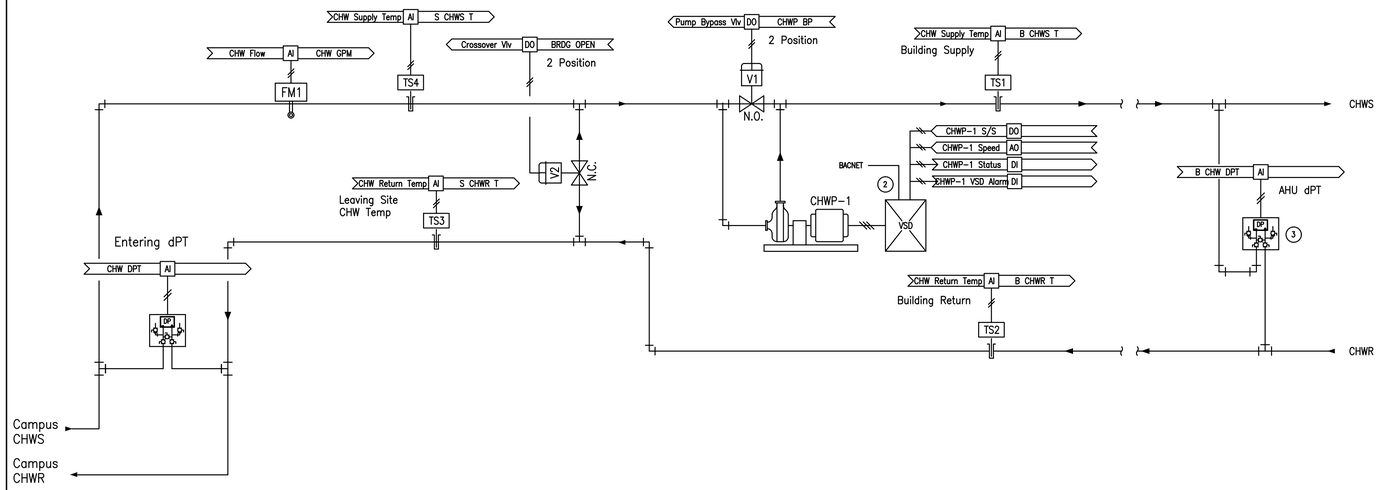

NOTES

1. Differential pressure setpoint shall be equal to chilled water coil pressure drop + chilled water coil control valve pressure drop + 5 psi. initial setting shall be 5 psi + 5 psi + 5 psi = 15 psi. Contractor shall adjust setpoint based on submittal data for actual equipment purchased.
2. Provide BacNet communications interface to the control system for diagnostic point information. Refer to points list for required points to be mapped.
3. Locate differential pressure sensor at AHU-1 CHW coil, as directed. Install transmitter and bypass assembly no higher than 6 feet AFF.

POINTS LIST

POINT DESCRIPTOR	POINT TYPE DI	AI	DO	AO	VP	REMARKS
Pump Bypass Valve, V1			•			
Crossover Bridge Valve, V2			•			
CHHP-1 S/S			•			
CHWP-1 Status	•					
CHWP-1 Speed				•		
CHWP-1 VSD Alarm	•					
CHW Supply Temp, T1		•				
CHW Return Temp, T2		•				
Leaving CHW Return Temp, T3		•				
Entering CHW Supply Temp, T4		•				
Building CHW Differential Pressure		•				
Entering CHW Differential Pressure		•				

LOGIC VARIABLES

BINARY	ANALOG	DESCRIPTION
CHWP		ON WHEN CHW PUMP IS COMMANDED TO RUN
PxPF		ON WHEN PUMP x STATUS IS PROVEN
PxFL		ON WHEN PUMP x PROOF HAS FAILED
FLOW		ON WHEN PUMP IS PROVEN ON
	OAT	VARIABLE VALUE OF OUTDOOR AIR TEMPERATURE
	PxRT	VARIABLE VALUE OF PUMP x RUNTIME (HH:MM)
	xxx	xxx
	xxx	xxx
	CPCT	AHU CHILLED WATER PERCENT VALVE COMMANDED OPEN
	PBV	PUMP BYPASS VALVE COMMANDED CLOSED
	COV	BRIDGE CROSSOVER VALVE COMMANDED OPEN

CHILLED WATER BRIDGE AND PUMP CONTROL

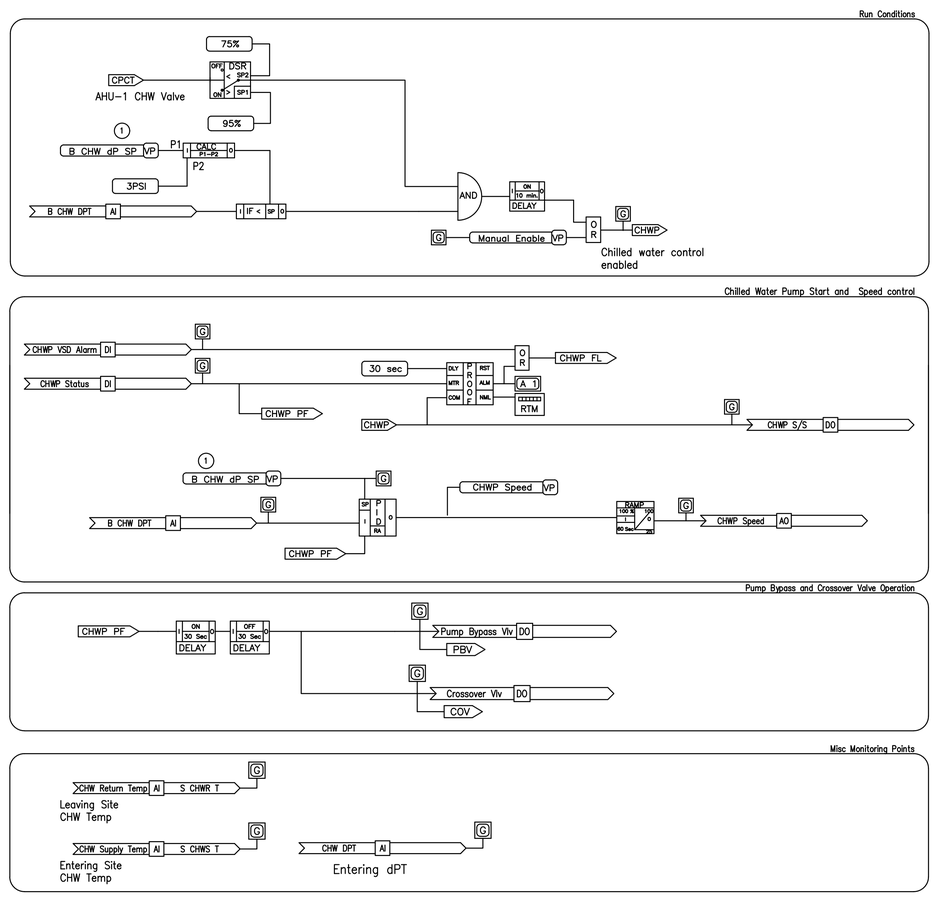

ELECTRIC LADDER DIAGRAMS

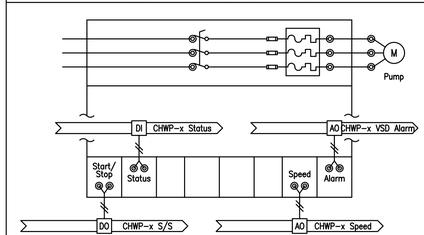

TYPICAL PUMP VSD

Software Logic Diagram

Wagner Architecture, pllc
92 ELAM COURT
NEW HILL, NORTH CAROLINA 27562
TEL. (919) 612.5050

Kramer Engineering Services, pllc
5517 Cascade Dr Chapel Hill, NC 27514
TEL (919)933-3350
email: donna@kespllc.com
Firm license: P-1099

bennett&pless
formerly LHC STRUCTURAL ENGINEERS

NV5 ENGINEERS AND CONSULTANTS, INC.
3300 REGENCY PARKWAY, STE 100
CARY, NC 27518
P: 919.851.1912 www.NV5.com
NC License # F-1333
formerly CALYX Engineers + Consultants

NORTH CAROLINA PROFESSIONAL SEAL 14917 ENGINEER DONNA D. KRAMER 2023

PREPARED FOR
NORTH CAROLINA STATE UNIVERSITY
COLLEGE OF VETERINARY MEDICINE

TRANSLATIONAL RESEARCH FACILITY

revisions

building number

cadd file number

drawn by EAP

checked by DDK

date ISSUED FOR CONSTRUCTION – 05/18/23

project number
NCSU CODE: 42124
ITEM: 305
WA 202207
SCO#: 21-24030-01A

HVAC CONTROLS - CHILLED WATER PUMP AND BYPASS

sheet number: M607

revision number:

FLOW TRACKING ZONE WITH HOT WATER REHEAT [DWG M602]

A) SPACE TEMPERATURE CONTROL: NORMAL SETPOINT SHALL BE 70°F (ADJ.). ADJUSTMENT RANGE SHALL BE BETWEEN 65°F (ADJ.) 85°F(ADJ). TEMPERATURE SETPOINT MAY BE SPECIES DEPENDENT OR DEPENDENT ON THE AGE OR CONDITION OF THE ANIMAL. SETPOINT SHALL BE ADJUSTABLE (BY EMCS) BETWEEN THESE RANGES. ALL OTHER DEADBANDS, DIFFERENTIALS, ETC. SHALL BE CALCULATED IN THE PROGRAM LOGIC.

B) AIR FLOW CONTROL

1) NEGATIVE AIR PRESSURE ROOMS:

a) GENERAL EXHAUST AIR VALVE (GEV) CONTROL: THE BAS SHALL CONTROL THE DAMPER VIA A PID LOOP TO MAINTAIN THE GEV VOLUME AT SETPOINT.

(i) WHEN EITHER THE AHU OR EXHAUST SYSTEM ARE ON. INITIAL SETPOINT SHALL BE AS INDICATED ON THE AIR VALVE SCHEDULE.

b) SUPPLY AIR VALVE (SAV) CONTROL: THE BAS SHALL CONTROL THE DAMPER VIA A PID LOOP TO MAINTAIN THE SAV VOLUME AT SETPOINT.

(i) BAS SHALL CONTINUOUSLY CALCULATE THE ZONE SUPPLY FLOW SETPOINT. THE SUPPLY FLOW SETPOINT SHALL EQUAL THE EXHAUST FLOW IN THE ZONE SERVED, MINUS A ZONE FLOW OFFSET VALUE AS INDICATED ON THE AIR VALVE SCHEDULE.

2) POSITIVE AIR PRESSURE ROOMS:

a) SUPPLY AIR VALVE (SAV) CONTROL: THE BAS SHALL CONTROL THE DAMPER VIA A PID LOOP TO MAINTAIN THE SAV VOLUME AT SETPOINT.

(i) WHEN EITHER THE AHU OR EXHAUST SYSTEM ARE ON. INITIAL SETPOINT SHALL BE AS INDICATED ON THE AIR VALVE SCHEDULE.

b) GENERAL EXHAUST AIR VALVE (GEV) CONTROL: THE BAS SHALL CONTROL THE DAMPER VIA A PID LOOP TO MAINTAIN THE GEV VOLUME AT SETPOINT.

(i) BAS SHALL CONTINUOUSLY CALCULATE THE ZONE EXHAUST FLOW SETPOINT. THE EXHAUST FLOW SETPOINT SHALL EQUAL THE SUPPLY FLOW IN THE ZONE SERVED, MINUS A ZONE FLOW OFFSET VALUE AS INDICATED ON THE AIR VALVE SCHEDULE. HOLDING ROOMS ARE SWITCHABLE BETWEEN POSITIVE AND NEGATIVE.

3) SWITCHING SHALL BE COMPLETED BY REQUEST TO EMCS.

4) AIR VALVES SHALL FAIL TO LAST POSITION. THE FACILITY IS OCCUPIED 24/7 WITH THE EXCEPTION OF SEASONAL SHUTDOWNS.

5) DURING SEASONAL SHUTDOWNS WHICH SHALL BE SCHEDULED WITH THE USERS, AIR CHANGE RATES IN ANIMAL HOLDING ROOMS AND INDUCTION/RECOVERY WILL BE REDUCED FROM 15 TO 5.

C) HYDRONIC REHEAT: ZONE REHEAT COIL VALVE SHALL MODULATE IN A PID LOOP TO MAINTAIN SPACE TEMPERATURE HEATING SETPOINT AS DEFINED ABOVE WITH A 2F THROTTLING RANGE. VALVE SHALL BE CLOSED WHENEVER THE PARENT AHU AND EF S OFF.

1) FAIL TO LAST POSITION.

D) REPORTS:

1) CONFIGURE A TABULAR REPORT USING REAL-TIME DATA WITH THE FOLLOWING COLUMN HEADINGS (AS APPLICABLE): TERMINAL DESCRIPTION, ZONE TEMPERATURE, ZONE TEMP SETPOINT, AIRFLOW SETPOINT, AIRFLOW, DAMPER POSITION (0 TO 100% OPEN), REHEAT OUTPUT (0 TO 100% OPEN) & DISCHARGE TEMPERATURE. AT THE TOP OF THE TABLE, LIST BUILDING NUMBER, FLOOR OR AREA DESCRIPTION IF APPLICABLE, AIR HANDLING UNIT DESIGNATION, AIR HANDLING UNIT VOLUME (% OF FULL VOLUME) AND AIR HANDLER DISCHARGE AIR TEMPERATURE.

VARIABLE SPEED EXHAUST FAN CONTROL OF MANIFOLDED EXHAUST SYSTEM [EF-2A, -2B, AND -2C] (SHEET M603)

A. **GENERAL**: BAS SHALL CONTROL THE EXHAUST SYSTEM AND EQUIPMENT AND PROVIDE MONITORING AND DIAGNOSTIC INFORMATION FOR MANAGEMENT PURPOSES.

B. **EXHAUST FAN**: IT IS THE INTENT THAT TWO FANS SHALL RUN CONTINUOUSLY AND THAT IF ONE FAN FAILS, THE THRID (LAG) FAN WILL START SO THE SYSTEM WILL BE CAPABLE OF MAINTAINING EXHAUST VOLUME. FAN SPEEDS SHALL BE SYNCHRONIZED AND CONTROLLED FROM A COMMON SIGNAL TO MAINTAIN EXHAUST DUCT STATIC PRESSURE SETPOINT AS DETERMINED BY TEST AND BALANCE. BAS SHALL CONTROL THE STARTING AND STOPPING OF THE EXHAUST FAN AS FOLLOWS:

1. **START/STOP**: WHEN SYSTEM IS ENABLED AND AHU IS PROVED ON, BAS SHALL COMMAND THE OPERATION OF THE EXHAUST FANS IN STAGES AND THEY SHALL RUN CONTINUOUSLY. A MINIMUM OF 2 (ADJ.) FANS SHALL RUN CONTINUOUSLY WHEN THE SYSTEM IS ENABLED. THIS NUMBER SHALL BE CHANGEABLE VIA THE BAS. THE ROTATION OF THE LAG FAN SHALL BE VIA MANUAL COMMAND.
2. **PROOF**: BAS SHALL PROVE FAN OPERATION AND USE THE STATUS INDICATION TO ACCUMULATE RUNTIME. UPON FAILURE OF AN EXHAUST FAN, THE BAS SHALL ENUNCIATE AN ALARM.
3. **VSD CONTROL**: WHENEVER THE FAN IS ENERGIZED, BAS SHALL CONTROL THE SPEED OF THE VSD TO MAINTAIN THE MINIMUM DUCT STATIC PRESSURE SENSOR. ON START THE FAN WILL RAMP TO 35% (ADJ.) SPEED UNTIL THE ISOLATION DAMPER IS >80% OPEN. ONCE THE DAMPER IS PROVEN, THE VSD SHALL RAMP TO SPEED WITHIN ADJUSTABLE ACCELERATION LIMITS. WHEN COMMANDED TO STOP THE VSD SHALL RAMP DOWN WITHIN ADJUSTABLE DECELERATION LIMITS. BAS SHALL MONITOR A COMMON ALARM OUTPUT FROM THE DRIVE AND ENUNCIATE A LEVEL 2 ALARM WHEN AN ALARM IS INDICATED.
   a) EXHAUST DUCT PRESSURE SETPOINT: SETPOINT SHALL BE:
      1) FIXED AT 0.75" (ADJ) WITH FINAL SETPOINT DETERMINED DURING TEST AND BALANCE.

C. **ISOLATION DAMPER**: WHENEVER THE FAN IS ENERGIZED, BAS SHALL OPEN THE ASSOCIATED ISOLATION DAMPERS. WHENEVER THE FAN STOPS, THE DAMPER SHALL CLOSE.

D. **FIRE SAFETY**: UPON COMMAND BY THE FIRE ALARM SYSTEM, BAS SHALL SHUT OFF EXHAUST FANS.

FAN COIL UNITS (DWG M604)

A) **GENERAL**: CONTROL SHALL INCLUDE FAN START/STOP, WITH COOLING AND HEATING CONTROL

B) **SPACE TEMPERATURE CONTROL:** NORMAL SETPOINT SHALL BE 73°F (ADJ). OCCUPIED/UNOCCUPIED SCHEDULES DO NOT APPLY IN THE LOCATIONS WHERE FAN COIL UNITS ARE INSTALLED. ALL OTHER DEADBANDS, DIFFERENTIALS, ETC. SHALL BE CALCULATED IN THE PROGRAM LOGIC. SEPARATE HEATING AND COOLING SETPOINTS SHALL BE CALCULATED.

1) **NORMAL SPACE COOLING SETPOINT**: SHALL BE THE NORMAL SPACE TEMPERATURE PLUS 2°F (ADJ.)

2) **NORMAL SPACE HEATING SETPOINT**: SHALL BE THE NORMAL SPACE TEMPERATURE MINUS 2°F (ADJ.)

C) **FAN:** FAN MAY BE ENABLED TO RUN CONTINUOUSLY OR IT MAY BE CYCLED ON WHEN THERE IS A CALL FOR HEATING OR COOLING. UNDER NORMAL OPERATION FAN SHALL BE DEENERGIZED EXCEPT AS REQUIRED TO MAINTAIN TEMPERATURE SETPOINTS FOR BOTH HEATING AND COOLING WITH A CYCLE DIFFERENTIAL OF 3°F (ADJ.). BAS SHALL PROVE FAN OPERATION AND USE THE STATUS INDICATION TO ACCUMULATE RUNTIME.

D) **VALVES:** HEATING AND COOLING CONTROL VALVES SHALL CYCLE AS REQUIRED TO MAINTAIN SPACE TEMPERATURE SETPOINT FOR THE ASSOCIATED MODE (HEATING OR COOLING). PROGRAMMING SHALL BE IMPLEMENTED TO PREVENT OVERLAP OF THE HEATING AND COOLING VALVES.

E) **OVERFLOW SAFETY**: A MOISTURE SENSOR IN THE SECONDARY DRAIN PAN OR FLOAT SWITCH IN THE PRIMARY DRAIN PAN WILL SIGNAL A CONDENSATE OVERFLOW ALARM CONDITION. WHEN THE ALARM IS ACTIVATED THE FAN SHALL BE COMMANDED TO STOP AND THE CHILLED WATER VALVE SHALL CLOSE.

100% OA AHU WITH HOT WATER PREHEAT, CHW, AND HUMDIFICATION [SHEET M605]

A) **GENERAL**: THE AIR HANDLER SHALL BE FULLY CONTROLLED BY THE BAS. AIR HANDLER CONTROL LOGIC STRATEGIES SHALL INCLUDE

1) SEQUENCED HEATING AND COOLING COIL VALVE CONTROL
2) FREEZE SAFETY.
3) SMOKE/FIRE SAFETY
4) SUCTION LOW STATIC PRESSURE SAFETY

B) **SUPPLY FAN**: BAS SHALL CONTROL THE STARTING AND STOPPING OF THE SUPPLY FAN AS FOLLOWS:

1) **START/STOP**: BAS SHALL COMMAND THE OPERATION OF THE SUPPLY FAN AND IT SHALL RUN CONTINUOUSLY WHENEVER THE AHU IS "ENERGIZED" AND NO SAFETIES HAVE BEEN ACTIVATED. TYPICALLY, THE UNIT WILL RUN CONTINUOUSLY.
2) **PROOF**: BAS SHALL PROVE FAN OPERATION AND USE THE STATUS INDICATION TO ACCUMULATE RUNTIME.

C) **OA AND FAN ISOLATION DAMPERS**: THE OA AND FAN ISOLATION DAMPERS SHALL OPEN WHENEVER EACH AHU FÂN IS ENERGIZED AND CLOSE WHEN IT IS DEENERGIZED. A DAMPER POSITION END SWITCH SHALL PROVE THE DAMPERS ARE OPEN BEFORE THE FAN IS ALLOWED TO RUN. UPON FAILURE OF THE DAMPERS, BAS SHALL DEENERGIZE THE SUPPLY FAN, LOCKOUT THE RUN COMMAND, AND ENUNCIATE AN ALARM.

1) THE AIR HANDLER INCLUDES A FOUR FAN ARRAY. EACH FAN IN THE ARRAY SHALL BE PROVIDED WITH A DEDICATED ISOLATION DAMPER.

D) **DISCHARGE TEMPERATURE CONTROL**: THE DISCHARGE TEMPERATURE SETPOINT SHALL BE SET TO THE LOWER OF THE FOLLOWING:

1) A LINEAR RESET LOOP OUTPUT RESET FROM 60°F TO 55°F (BOTH ADJUSTABLE) AS THE EXHAUST AIR HUMIDITY (CALCULATED AS AN AVERAGE OF THE TWO HOLDING ROOM EXHAUST AIR HUMIDITIES) RISES FROM 40% TO 50% (BOTH ADJUSTABLE).
   a) RESET VALUES SHALL BE ADJUSTED FOR OPTIMIZED BUILDING AND ENERGY PERFORMANCE.

E) **VSD CONTROL**: WHENEVER THE FAN IS ENERGIZED, BAS SHALL CONTROL THE SPEED OF THE VSD TO MAINTAIN THE SUPPLY DUCT STATIC PRESSURE SETPOINT. ON START AND STOP, THE VSD SHALL RAMP TO SPEED AND SLOW DOWN WITHIN ADJUSTABLE ACCELERATION AND DECELERATION LIMITS.

1) **SUPPLY DUCT PRESSURE SETPOINT**: SETPOINT SHALL BE SET DURING TEST AND BALANCE. INITIAL SETPOINT SHALL BE 1.00" (ADJ).
2) **VSD BACNET INTERFACE:** BAS SHALL MONITOR THE VSD VIA A BACNET INTERFACE. ALL AVAILABLE INFORMATION SHALL BE ACCESSIBLE VIA THE INTERFACE FOR DISPLAY ON THE VFD GRAPHIC. BAS SHALL ALSO ACCUMULATE ENERGY CONSUMPTION OF THE FAN MOTOR (KWH) ON A DAILY, MONTHLY & YEARLY BASIS. BAS SHALL DISPLAY KWH VALUES FOR THE FOLLOWING:
   a) KWH DAY TO DATE (TOTAL FOR THE DAY)
   b) KWH PREVIOUS DAY
   c) KWH WEEK TO DATE
   d) KWH PREVIOUS WEEK
   e) KWH YEAR TO DATE
   f) KWH PREVIOUS YEAR

F) **PREHEATING SECTION**:

1) **HW HEATING VALVE**: THE HEATING VALVE WILL BE ENABLED UNDER ALL CONDITIONS, N.O. VALVE SHALL MODULATE PER THE HIGHER OF:
   a) A PID LOOP TO MAINTAIN A LEAVING COIL TEMPERATURE AT 52F, AND
   b) A LINEAR RESET LOOP OUTPUT FROM 0% TO 100% AS LEAVING COIL TEMPERATURE FALLS FROM 47°F TO 42°F.
2) **HW CIRCULATING PUMP**:
   a) BAS SHALL ENABLE THE PUMP WHENEVER THE OA TEMPERATURE IS LESS THAN 40F. BAS SHALL DISABLE THE PUMP WHENEVER THE OA TEMPERATURE IS GREATER THAN 45F.
   b) **PROOF**: BAS SHALL PROVE PUMP OPERATION AND USE THE STATUS INDICATION TO ACCUMULATE RUNTIME. BAS SHALL ENUNCIATE AN ALARM UPON PUMP FAILURE.

G) **COOLING SECTION**:

1) **COOLING COIL VALVE**: N.C. COOLING COIL VALVE SHALL MODULATE VIA A DA PID LOOP TO MAINTAIN DISCHARGE TEMPERATURE AT SETPOINT WHEN OUTSIDE AIR CONDITIONS ARE ABOVE 53°F AND PREHEAT VALVE IS CLOSED.
   a) IF A FREEZESTAT IS ACTIVATED CHILLED WATER VALVE SHALL OPEN TO 50%.

H) **STEAM HUMIDIFIER]**

1) **HUMIDIFIER ISOLATION VALVE**: WHEN THE AHU IS ENERGIZED AND THE OUTSIDE AIR TEMPERATURE IS BELOW 55°F (WITH 3°F CYCLE DIFFERENTIAL), N.C. STEAM HUMIDIFIER ISOLATION VALVE SHALL OPEN.
2) **HUMIDIFIER CONTROL VALVE**: WHEN THE AHU IS ENERGIZED AND THE OUTSIDE AIR TEMPERATURE IS BELOW 55°F (WITH 3°F CYCLE DIFFERENTIAL), N.C. STEAM HUMIDIFIER CONTROL VALVE SHALL MODULATE VIA A PID LOOP TO MAINTAIN EXHAUST RELATIVE HUMIDITY SETPOINT OF 35% (ADJ.) SUPPLY DUCT HUMIDITY WILL RESET THE CONTROL VALVE SIGNAL FROM 100% TO 0% AS DUCT HUMIDITY RISES FROM 8STO 90%RH. STEAM VALVE SHALL CLOSE IF THE SUPPLY DUCT RH EXCEEDS 90% CONTINUOUSLY FOR 5 MINUTES. A MAXIMUM CONTROL VALVE STROKE LIMIT WILL BE AVAILABLE ON THE GRAPHIC TO LIMIT THE MAXIMUM STROKE OF THE VALVE DURING ALL OPERATING CONDITIONS.

I) **SAFETIES**

1) AHU WILL SHUT DOWN AND SIGNAL AN ALARM CONDITION WHEN THE FIRE ALARM, FREEZESTAT, OR SUCTION LOW STATIC PRESSURE SWITCH ARE ACTIVATED.

J) **UV DISINFECTING LIGHTS** (ADD ALTERNATE NO. 13) UV DISINFECTING LIGHTS SHALL BE INSTALLED DOWNSTREAM OF THE CHILLED WATER COIL UNDER ALTERNATE NO. 13. A SELF-CONTAINED CONTROLLER PROVIDED BY THE MANUFACTURER WILL INCLUDE A MANUAL DISCONNECT AND DOOR SAFETY INTERLOCK. IF THE POWER IS NOT DISCONNECTED PRIOR TO ENTERING THE AHU FOR SERVICING, THE DOOR SWITCH WILL AUTOMATICALLY DISCONNECT POWER. AFTER THE TECHNICIAN HAS COMPLETED SERVICE WORK, THEY WILL RESTORE POWER TO THE LIGHTS FROM THE CONTROL PANEL. THE AHU RUNS 24/7 UNDER NORMAL CONDITIONS. THE UV LIGHTS ARE NOT CYCLED ON AND OFF UNDER NORMAL OPERATION AS CYCLING THE LIGHTS GREATLY REDUCES LAMP LIFE.

STEAM TO HW CONVERTER WITH CV PUMPS [SHEET M606]

A) **GENERAL**: BAS SHALL CONTROL THE HOT WATER SYSTEMS AND EQUIPMENT AND PROVIDE MONITORING AND DIAGNOSTIC INFORMATION FOR MANAGEMENT PURPOSES.

B) **HEATING ENABLE**: HEATING SHALL BE ENABLED WHEN:

1) THE SYSTEM IS NOT MANUALLY DISABLED BY THE OPERATOR AT THE OPERATOR INTERFACE.

C) **HW PUMP CONTROL**:

1) WHENEVER THE SYSTEM IS ENABLED, ONE HEATING WATER PUMP SHALL RUN CONTINUOUSLY. LEAD-LAG POSITION OF EACH PUMP SHALL BE INITIATED MANUALLY THROUGH THE BAS.
2) BAS SHALL USE A PID LOOP TO MAINTAIN THE DIFFERENTIAL PRESSURE SETPOINT ACROSS THE REMOTE DIFFERENTIAL PRESSURE SENSOR. THE DIFFERENTIAL PRESSURE SETPOINT SHALL INITIALLY BE SET AT 10 PSI (ADJ. AS DETERMINED BY THE BALANCE CONTRACTOR}.
3) THE OUTPUT OF THE PID LOOP SHALL CONTROL THE VSD OF .THE OPERATING PUMP.
4) BAS SHALL PROVE OPERATION OF EACH PUMP INDIVIDUALLY. UPON FAILURE OF A PUMP, THE STANDBY SHALL BE STARTED AND AN ALARM SHALL BE ENUNCIATED.
5) BAS SHALL PROVE OPERATION OF THE PUMP. UPON FAILURE OF THE LEAD PUMP, AND ALARM SHALL BE ENUNCIATED AND THE STANDBY PUMP SHALL BE STARTED.

D) **HEATING WATER TEMPERATURE CONTROL**: BAS SHALL RESET THE HOT WATER SUPPLY TEMPERATURE SETPOINT FROM 180°F (ADJ.) TO 140°F (ADJ.) BASED AS THE OA TEMPERATURE RISES FROM 20°F (ADJ.) TO 70°F (ADJ.)

1) THE BAS SHALL MODULATE THE 1/3 [AND 2/3 STEAM] VALVES TO THE HEAT EXCHANGER IN SEQUENCE VIA A PID LOOP TO MAINTAIN THE HW SUPPLY TEMPERATURE SETPOINT.
2) THE VALVES SHALL REMAIN CLOSED UNTIL PUMP STATUS IS PROVEN.
3) STEAM SUPPLY PRESSURE TO THE HEAT EXCHANGER SHALL BE MONITORED BY THE BAS AND ENUNCIATE AN ALARM IF IT FALLS BELOW 5 PSI (ADJ.)

CHILLED WATER BYPASS AND PUMP CONTROL [SHEET M607]

A) **GENERAL**: BAS SHALL CONTROL THE CHILLED WATER PUMP BYPASS VALVE, CROSSOVER BRIDGE VALVE, AND CHILLED WATER PUMP. BAS WILL PROVIDE MONITORING AND DIAGNOSTIC INFORMATION FOR MANAGEMENT PURPOSES.

1) UNDER NORMAL OPERATION, CHILLED WATER WILL BE DELIVERED AT SUFFICIENT DIFFERENTIAL PRESSURE FROM THE CAMPUS LOOP THAT THE TERTIARY PUMP (CHWP-1) LOCATED IN THE TRF BUILDING WILL NOT OPERATE. UNDER NORMAL OPERATION, THE PUMP BYPASS VALVE WILL REMAIN OPEN AND THE CROSSOVER BRIDGE VALVE WILL REMAIN CLOSED.

B) **CHILLED WATER PUMP ENABLE**: THE TRF CHILLED WATER PUMP SHALL BE ENABLED WHEN:

1) THE DIFFERENTIAL PRESSURE SETPOINT DROPS 3 PSIG BELOW THE SETPOINT, AND THE CHILLED WATER VALVE IS MORE THAN 95% OPEN FOR MORE THAN 10 MINUTES.
2) WHENEVER THE PUMP IS ENABLED, IT SHALL RUN UNTIL THE CONTROL VALVE POSITION IS LESS THAN 50% OPEN OR THE PUMP SPEED IS LESS THAN 25%.

C) **CHW PUMP SPEED CONTROL**:

1) BAS SHALL USE A PID LOOP TO MAINTAIN THE DIFFERENTIAL PRESSURE SETPOINT ACROSS THE BUILDING DIFFERENTIAL PRESSURE SENSOR. THE DIFFERENTIAL PRESSURE SETPOINT SHALL INITIALLY BE SET AT 15 PSI (ADJ. AS DETERMINED BY THE BALANCE CONTRACTOR}.
2) THE OUTPUT OF THE PID LOOP SHALL CONTROL THE VSD OF THE PUMP.
3) BAS SHALL PROVE OPERATION OF THE PUMP. UPON FAILURE OF THE PUMP, AN ALARM SHALL BE ENUNCIATED.

D) **PUMP BYPASS AND CROSSOVER BRIDGE VALVE CONTROL**: WHEN THE CHILLED WATER PUMP IS PROVED ON, THE PUMP BYPASS VALVE SHALL CLOSE AND THE CROSSOVER BRIDGE VALVE SHALL OPEN.

IN ADDITION TO THE SENSORS, RELAYS, DRIVES, METERS, ETC LISTED ON THE PREVIOUS CONTROL DRAWINGS, THE FOLLOWING POINTS SHALL BE MONITORED BY THE BAS. THE DEVICES SHALL BE PROVIDED AND INSTALLED UNDER THE DIVISION WITH PRIMARY RESPONSIBILITY FOR THE SYSTEM. THE SENSOR CABLING AND RACEWAY SHALL BE PROVIDED AND INSTALLED UNDER DIVISION 23.

MISCELLANEOUS POINTS LIST

POINT DESCRIPTOR	POINT TYPE					REMARKS
	DI	AI	DO	AO	VP	
HEATING HOT WATER MAKE-UP	•					Flow Switch
MEDICAL OXYGEN HIGH PRESSURE	•					
MEDICAL OXYGEN LOW PRESSURE	•					
MEDICAL VACUUM LOW PRESSURE	•					

ENERGY MANAGEMENT NOTE:
THE FOLLOWING SYSTEMS SHALL BE MONITORED AND METERED, INDEPENDENT OF THE BUILDING AUTOMATION SYSTEM:
- BUILDING CHILLED WATER
- BUILDING STEAM
- DOMESTIC COLD WATER

Wagner Architecture, pllc
92 ELAM COURT
NEW HILL, NORTH CAROLINA 27562
TEL. (919) 612.5050

Kramer Engineering Services, pllc
5517 Cascade Dr Chapel Hill, NC 27514
TEL (919)933-3350
email: donna@kespllc.com
Firm license: P-1099

bennett&pless
formerly LHC STRUCTURAL ENGINEERS

NV5 ENGINEERS AND CONSULTANTS, INC.
3300 REGENCY PARKWAY, STE 100
CARY, NC 27518
P: 919.851.1912 www.NV5.com
NC License # F-1333
formerly CALYX Engineers + Consultants

NORTH CAROLINA PROFESSIONAL SEAL 14917 ENGINEER DONNA D. KRAMER 2023

PREPARED FOR
NORTH CAROLINA STATE UNIVERSITY
COLLEGE OF VETERINARY MEDICINE

TRANSLATIONAL RESEARCH FACILITY

revisions

building number

cadd file number

drawn by EAP

checked by DDK

date ISSUED FOR CONSTRUCTION – 05/18/23

project number
NCSU CODE: 42124
ITEM: 305
WA 202207
SCO#: 21–24030–01A

HVAC CONTROLS - SEQUENCES OF CONTROL AND MISCELLANEOUS MONITORING

sheet number: M608

revision number:

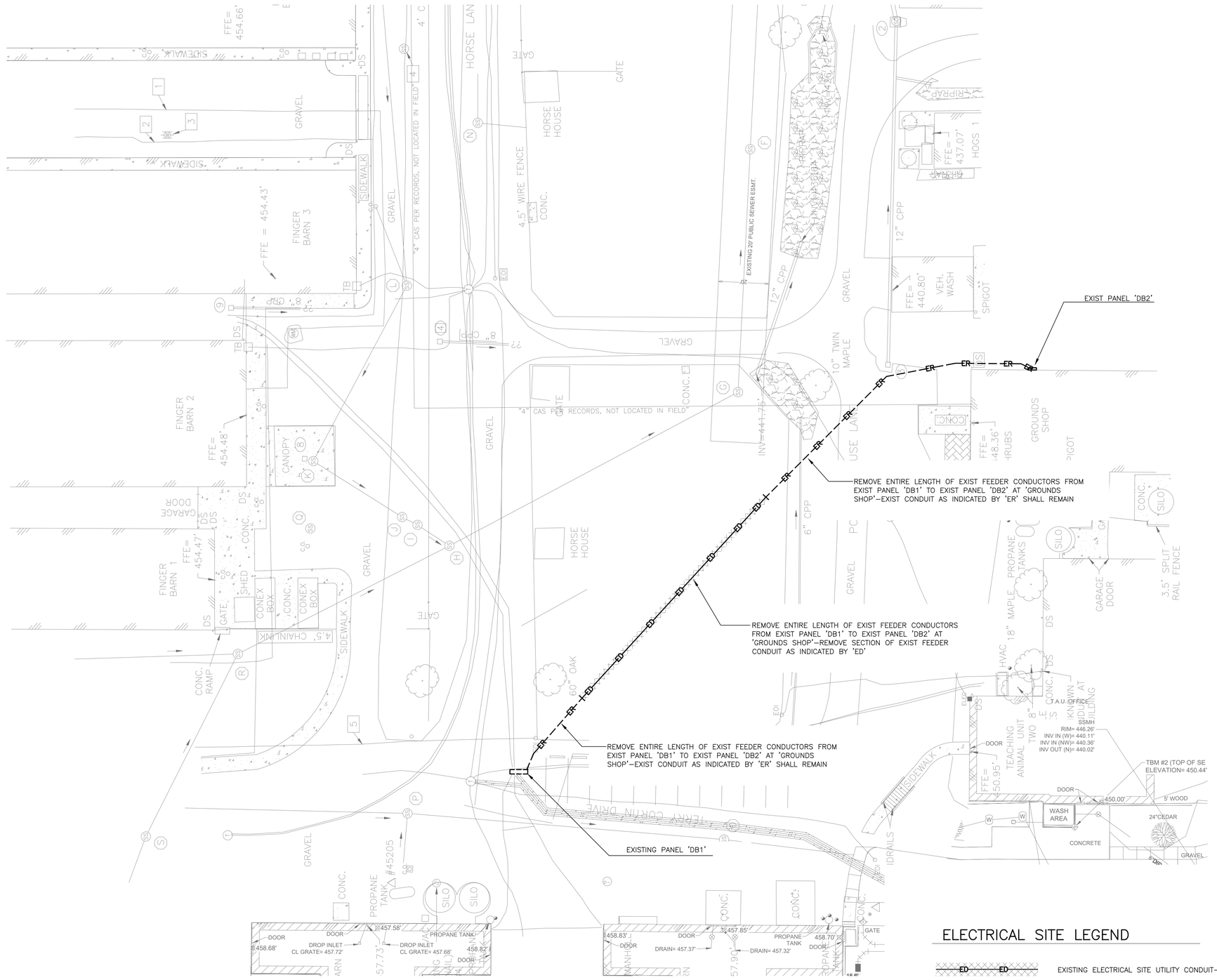

ELECTRICAL SITE LEGEND

ED ED	EXISTING ELECTRICAL SITE UTILITY CONDUIT–DEMOLISH
ER ER	EXISTING ELECTRICAL SITE UTILITY–REMAINS

1 / ES101 ELECTRICAL SITE PLAN – DEMOLITION

SCALE: 1"=20'

Wagner Architecture, pllc
92 ELAM COURT
NEW HILL, NORTH CAROLINA 27562
TEL. (919) 612.5050

Kramer Engineering Services, pllc
5517 Cascade Dr, Chapel Hill, NC 27514
TEL (919)933-3350
email: donna@kespllc.com
Firm license: P-1099

bennett&pless
formerly LHC STRUCTURAL ENGINEERS
5430 Wade Park Blvd, Suite 400
Raleigh, NC 27607
Tel 919 832 5587

Copyright 2022 • **Bennett & Pless, Inc.**
All Rights Reserved

B & P Job Number 22.08.048

NV5
NV5 ENGINEERS AND CONSULTANTS, INC.
3300 REGENCY PARKWAY, STE 100
CARY, NC 27518
P: 919.851.1912 www.NV5.com
NC License #F-1333
formerly CALYX Engineers + Consultants

NORTH CAROLINA PROFESSIONAL SEAL 14917 ENGINEER DONNA D. KRAMER 5/18/2023

PREPARED FOR
NORTH CAROLINA STATE UNIVERSITY
COLLEGE OF VETERINARY MEDICINE

TRUE NORTH
PLAN NORTH

TRANSLATIONAL RESEARCH FACILITY

revisions

building number

cadd file number

drawn by JEY

checked by DDK

date ISSUED FOR CONSTRUCTION 05/18/2023

project number
NCSU CODE: 42124
ITEM: 305
WA 202207
SCO#: 21–24030–01A

ELECTRICAL SITE PLAN - DEMOLITION

sheet number: ES101

revision number:

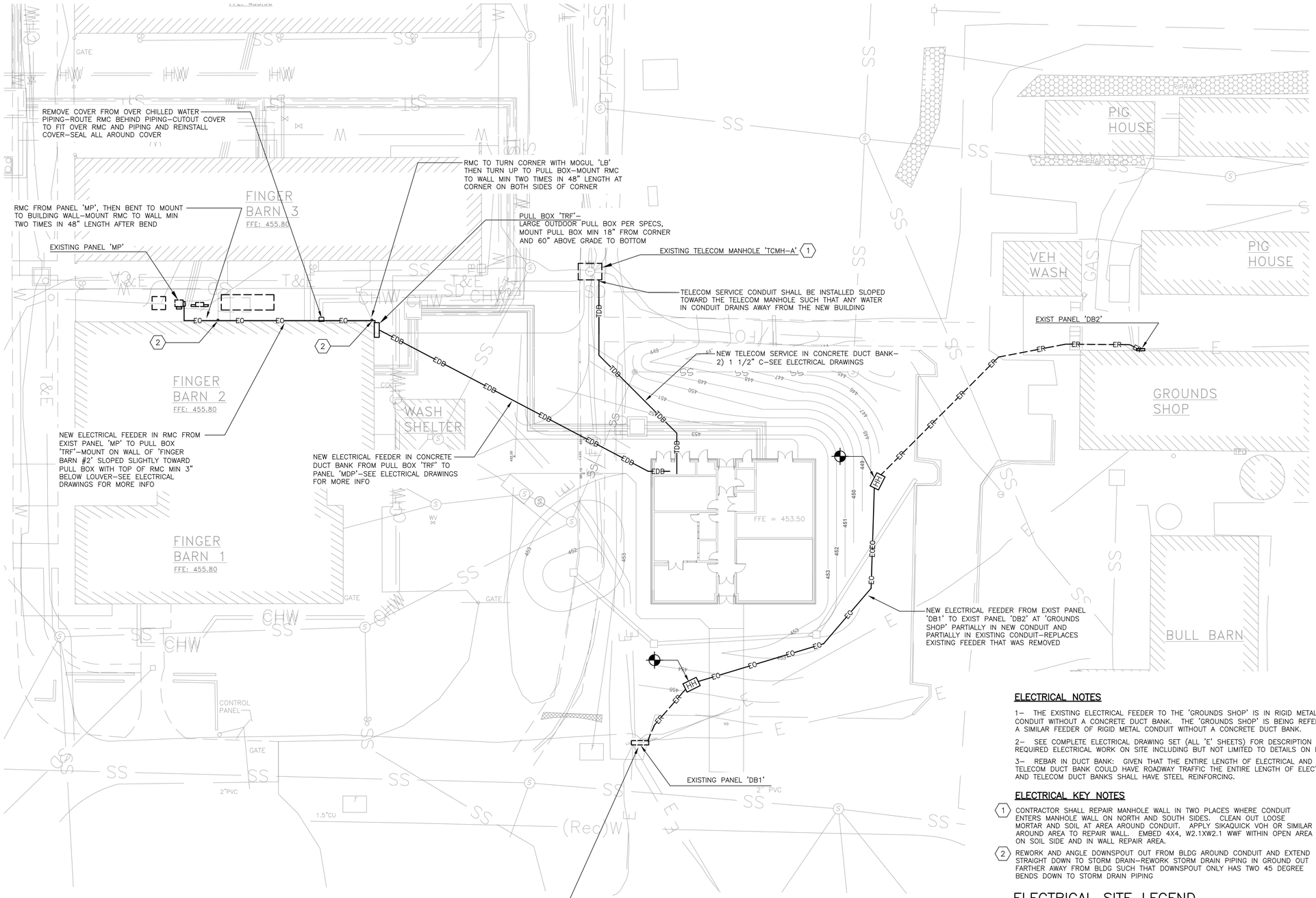

EXISTING PANEL 'DB1' IS FED FROM EXISTING PANEL 'MP' AND SERVES MULTIPLE DAIRY BARNS WITH REFRIGERATION EQUIPMENT WHICH IS CRITICAL TO MAINTAIN IN OPERATION AND POWERED–DURING POWER SHUTDOWN OF EXISTING PANEL 'MP' WHILE INSTALLING THE NEW BREAKER AND FEEDER FOR THE NEW BUILDING THE CONTRACTOR SHALL PROVIDE A TEMPORARY 120/208V, 3ø, 4W, 100kVA GENERATOR FOR SUPPLYING TEMPORARY POWER TO EXISTING PANEL 'DB1'–THE CONTRACTOR SHALL PROVIDE THE GENERATOR AND ALL NECESSARY TEMPORARY WIRING AND ASSOCIATED APPURTENANCES FOR INSTALLING THE GENERATOR AND POWER TO EXISTING PANEL 'DB1'–THE CONTRACTOR SHALL MAINTAIN THE GENERATOR AND FUEL DURING THE ENTIRE TIME THE POWER IS SHUTDOWN TO EXISTING PANEL 'MP'–COORDINATE WITH OWNER FOR INSTALLATION AND LOCATION OF GENERATOR, AND FOR OWNER TURNING OFF UNNECESSARY LOADS IN THE DAIRY BARN BUILDINGS SUCH THAT THE GENERATOR CAN SUPPLY THE CRITICAL REFRIGERATION AND OTHER LOADS

1 / ES102 ELECTRICAL SITE PLAN – RENOVATION

SCALE: 1"=20'

ELECTRICAL NOTES

1– THE EXISTING ELECTRICAL FEEDER TO THE 'GROUNDS SHOP' IS IN RIGID METAL CONDUIT WITHOUT A CONCRETE DUCT BANK. THE 'GROUNDS SHOP' IS BEING REFED WITH A SIMILAR FEEDER OF RIGID METAL CONDUIT WITHOUT A CONCRETE DUCT BANK.

2– SEE COMPLETE ELECTRICAL DRAWING SET (ALL 'E' SHEETS) FOR DESCRIPTION OF ALL REQUIRED ELECTRICAL WORK ON SITE INCLUDING BUT NOT LIMITED TO DETAILS ON E406.

3– REBAR IN DUCT BANK: GIVEN THAT THE ENTIRE LENGTH OF ELECTRICAL AND TELECOM DUCT BANK COULD HAVE ROADWAY TRAFFIC THE ENTIRE LENGTH OF ELECTRICAL AND TELECOM DUCT BANKS SHALL HAVE STEEL REINFORCING.

ELECTRICAL KEY NOTES

1. CONTRACTOR SHALL REPAIR MANHOLE WALL IN TWO PLACES WHERE CONDUIT ENTERS MANHOLE WALL ON NORTH AND SOUTH SIDES. CLEAN OUT LOOSE MORTAR AND SOIL AT AREA AROUND CONDUIT. APPLY SIKAQUICK VOH OR SIMILAR AROUND AREA TO REPAIR WALL. EMBED 4X4, W2.1XW2.1 WWF WITHIN OPEN AREA ON SOIL SIDE AND IN WALL REPAIR AREA.
2. REWORK AND ANGLE DOWNSPOUT OUT FROM BLDG AROUND CONDUIT AND EXTEND STRAIGHT DOWN TO STORM DRAIN–REWORK STORM DRAIN PIPING IN GROUND OUT FARTHER AWAY FROM BLDG SUCH THAT DOWNSPOUT ONLY HAS TWO 45 DEGREE BENDS DOWN TO STORM DRAIN PIPING

ELECTRICAL SITE LEGEND

ER	EXISTING ELECTRICAL SITE UTILITY CONDUIT–REMAINS AND REUSED
EC	NEW ELECTRICAL SITE UTILITY IN CONDUIT
EDB	NEW ELECTRICAL SITE UTILITY IN DUCT BANK
TDB	NEW TELECOM SITE UTILITY IN DUCT BANK
HH	HANDHOLE

SEE ELECTRICAL DRAWINGS FOR COMPLETE DESCRIPTION OF SITE UTILITY WORK.

Wagner Architecture, pllc
92 ELAM COURT
NEW HILL, NORTH CAROLINA 27562
TEL. (919) 612.5050

Kramer Engineering Services, pllc
5517 Cascade Dr, Chapel Hill, NC 27514
TEL (919)933-3350
email: donna@kespllc.com
Firm license: P-1099

bennett&pless
formerly LHC STRUCTURAL ENGINEERS
5430 Wade Park Blvd, Suite 400
Raleigh, NC 27607
Tel 919 832 5587

Copyright 2022 • Bennett & Pless, Inc.
All Rights Reserved

B & P Job Number 22.08.048

NV5
NV5 ENGINEERS AND CONSULTANTS, INC.
3300 REGENCY PARKWAY, STE 100
CARY, NC 27518
P: 919.851.1912 www.NV5.com
NC License #F-1333
formerly CALYX Engineers + Consultants

NORTH CAROLINA PROFESSIONAL ENGINEER SEAL 14917 5/18/2023 DONNA D. KRAMER

PREPARED FOR
NORTH CAROLINA STATE UNIVERSITY
COLLEGE OF VETERINARY MEDICINE

TRUE NORTH
PLAN NORTH

TRANSLATIONAL RESEARCH FACILITY

revisions

building number

cadd file number

drawn by: JEY

checked by: DDK

date: ISSUED FOR CONSTRUCTION 05/18/2023

project number: NCSU CODE: 42124 ITEM: 305 WA 202207 SCO#: 21–24030–01A

ELECTRICAL SITE PLAN- RENOVATION

sheet number: ES102

revision number:

ELECTRICAL LEGEND

LIGHTING

LED OR FLUORESCENT LIGHT FIXTURE

LED OR FLUORESCENT LIGHT FIXTURE WALL MOUNTED VERTICALLY

LED, COMPACT FLUORESCENT, HID OR INCANDESCENT LIGHT FIXTURE

LED, COMPACT FLUORESCENT OR INCANDESCENT WALL WASH LIGHT FIXTURE

ROUND OR SQUARE LIGHT FIXTURE AS SHOWN–PARALLEL LINES INDICATE ORIENTATION OF LAMPS/LED MODULES–MOUNT FIXTURE SUCH THAT LAMPS/LED MODULES ARE ORIENTED TO MATCH PARALLEL LINES

HIGH INTENSITY DISCHARGE LIGHT FIXTURE

POLE MOUNTED LIGHT FIXTURE.

EXIT LIGHT–SHADED AREA INDICATES FACE(S)–ARROWS AS INDICATED ON DRAWINGS

EMERGENCY EGRESS LIGHT FIXTURE

LIGHT FIXTURE ON EMERGENCY POWER CIRCUIT OR WITH EMERGENCY BATTERY BACKUP

PHOTOCELL

DEVICES

S — SINGLE POLE SWITCH

MODIFIERS FOR SWITCHES:

3 = THREE WAY
4 = FOUR WAY
DL = DIMMER SWITCH FOR LED– 0–10V DIMMING WITH CLASS 1 0–10V CONTROL LINK, 120–277V LINE VOLTAGE, 8A LOAD CAPACITY, MINIMUM 50mA SINK CAPACITY
DS = DIMMER/OCCUPANCY/VACANCY SENSOR SWITCH FOR LED– 0–10V DIMMING WITH CLASS 1 CONTROL LINK, 120–277V LINE VOLTAGE, 8A LOAD CAPACITY, MINIMUM 50mA SINK CAPACITY
TS = TIMER SWITCH–120/277V, 800W @ 120V, 1200W @ 277V, SET FOR 30 MINUTES

S_{OSX} — WALL MOUNT OCCUPANCY SENSOR SWITCH

MODIFIERS FOR SWITCHES:

OS1 = OCCUPANCY SENSOR – WALL MOUNT, PASSIVE INFRARED TYPE, 120/277V, 800W, SINGLE SWITCH/RELAY, AUTO OR MANUAL ON
OS2 = OCCUPANCY SENSOR – WALL MOUNT, PASSIVE INFRARED TYPE, 120/277V, 800W, DOUBLE SWITCH/RELAY, AUTO OR MANUAL ON

OS — OCCUPANCY SENSOR LIGHTING CONTROLLER – CEILING MOUNT, INDOOR, LINE VOLTAGE, 120/277V

MODIFIERS FOR SENSORS:

PI1 = PASSIVE INFRARED TYPE, 120V=800W, 277V=1200W, 500 SQUARE FOOT COVERAGE,–WATTSTOPPER #CI–355–1 OR APPROVED EQUAL
PI2 = PASSIVE INFRARED TYPE, 120V=800W, 277V=1200W, 1200 SQUARE FOOT COVERAGE,–WATTSTOPPER #CI–355 OR APPROVED EQUAL

SEE DETAILS FOR MOUNTING AND SPACING FROM HVAC DIFFUSERS OF OCCUPANCY SENSORS

120V DUPLEX RECEPTACLE

120V DUPLEX RECEPTACLE–MOUNTED HIGH–SEE MOUNTING DETAILS

TWO 120V DUPLEX RECEPTACLES IN TWO GANG BOX

250V RATED RECEPTACLE WITH NEMA CONFIGURATION INDICATED

250V RATED RECEPTACLE WITH NEMA CONFIGURATION INDICATED–MOUNTED HIGH–SEE MOUNTING DETAILS

SUSPENDED RECEPTACLE OR OTHER DEVICE–PROVIDE DEVICE AS INDICATED IN BOX SUSPENDED BY CORD–SEE SUSPENDED RECEPTACLE DETAIL

MODIFIERS FOR RECEPTACLES:

EWC = RECEPTACLE FOR ELECTRIC WATER COOLER–SEE 'RECEPTACLE FOR ELECTRIC WATER COOLER' DETAIL
GF = GROUND FAULT CIRCUIT INTERRUPTER
LF = FOR LAVATORY FAUCET–'GF' TYPE DEVICE–MOUNT DEVICE 18" AFF BESIDE THE SINK–COORDINATE WITH PLUMB CONTR FOR EXACT LOCATION FOR PROPER ACCESS AND SO AS NOT TO CONFLICT WITH THE PLUMBING INSTALLATION
LFW = FOR LAVATORY FAUCET WITH WEATHERPROOF WHILE–IN–USE COVER–'GF' TYPE DEVICE–MOUNT DEVICE 18" AFF BESIDE THE SINK– COORDINATE WITH PLUMB CONTR FOR EXACT LOCATION FOR PROPER ACCESS AND SO AS NOT TO CONFLICT WITH THE PLUMBING INSTALLATION
L6–20R = NEMA CONFIGURATION 'L6–20R'–CONFIGURATION MAY VARY

COORDINATE EXACT LOCATION OF RECEPTACLE FOR PARTICULAR EQUIPMENT WITH EQUIPMENT PROVIDER/INSTALLER SUCH THAT IT IS LOCATED AT EQUIPMENT/CORD LOCATION AND AS RECOMMENDED BY EQUIPMENT MANUFACTURER AND DOES NOT CONFLICT WITH OTHER EQUIPMENT

GF — GFCI/DISCONNECT SWITCH DEVICE

EQUIPMENT CONNECTIONS AND OUTLETS

MOTOR–HORSEPOWER AS INDICATED

J — JUNCTION, PULL, OR OUTLET BOX–IN OR ABOVE CEILING

J — JUNCTION, PULL, OR OUTLET BOX–IN WALL

• — EQUIPMENT CONNECTION–COORDINATE WITH EQUIPMENT SUPPLIER FOR CONNECTION TO EQUIPMENT BY DIRECT CONNECTION OR CONNECTION TO OUTLET, RECEPTACLE OR DISCONNECT PROVIDED BY OTHER CONTRACTOR

MODIFIERS FOR BOXES/CONNECTIONS:

EF = FOR EXHAUST FAN
HD = FOR HEPA DIFFUSER
MD = FOR MOTORIZED DAMPER
MG = FOR MED GAS ALARM PANEL
SL = FOR SURGICAL LIGHT
SV = FOR SOLENOID VALVE–SEE DETAIL 1/E407
TP = FOR TRAP PRIMER CONTROLS
VFD = FOR VFD–SEE 1/E403 FOR JUNCTION BOXES AND WIRING FOR VFD
WC = OUTLETS FOR WATER CLOSET FLUSH VALVE–SENSOR AND SOLENOID OUTLETS
WCTX = OUTLET FOR WATER CLOSET FLUSH VALVE TRANSFORMER

COORDINATE EXACT LOCATION OF OUTLET BOX/CONNECTION POINT WITH EQUIPMENT PROVIDER/INSTALLER SUCH THAT IT IS LOCATED AT EQUIPMENT/CONNECTION LOCATION AND AS RECOMMENDED BY EQUIPMENT MANUFACTURER–SEE 'EQUIPMENT CONNECTIONS AND VFD WIRING' DETAIL FOR CONNECTIONS FOR EQUIPMENT BY OTHERS

B — BLANK OUTLET–4" SQ. X 2 1/8" D BOX WITH TWO GANG TRIM RING AND BLANK COVER–PROVIDE 1" C STUBBED OUT DIRECTLY IN FRONT OF OUTLET ABOVE ACCESSIBLE CEILING AND TERMINATED INTO A 4" SQ. X 2 1/8" BOX–FOR FUTURE USE

WIRING SYSTEM

WIRING SYSTEM–BRANCH CIRCUIT OR FEEDER AS INDICATED ON DRAWINGS–CONCEAL IN OR ABOVE CEILING, OR IN WALL UNO

EH2A–1 — BRANCH OR FEEDER CIRCUIT HOMERUN TO PANEL, SWITCHBOARD, MOTOR CONTROL CENTER, ETC.–'EH2A' DESIGNATES EQUIPMENT, '1' DESIGNATES POLE IN EQUIPMENT

SWITCHLEG OR SWITCHED WIRING CIRCUIT–WITH UNSWITCHED BRANCH CIRCUIT AS REQUIRED–CONCEAL IN OR ABOVE CEILING OR IN WALL UNO

SWITCHLEG OR SWITCHED WIRING CIRCUIT AND 0–10V CLASS 1 DIMMING CONTROL CIRCUITRY–WITH UNSWITCHED BRANCH CIRCUIT AS REQUIRED–SEE LIGHTING PLANS AND RISERS/DETAILS FOR CIRCUITRY

CONTROL PANELS

MCP — MECHANICAL CONTROL PANEL FURNISHED AND INSTALLED BY MECHANICAL CONTRACTOR

DISCONNECT SWITCHES AND STARTERS

DISCONNECT SWITCH

ENCLOSED CIRCUIT BREAKER

S_{MX} — MOTOR SWITCH–WHERE 'X' INDICATES TYPE

MODIFIERS FOR MOTOR SWITCH:

MS = MANUAL MOTOR SENTINEL, WITH THERMAL OVERLOAD
MT = MANUAL MOTOR STARTING SWITCH
MD = MANUAL MOTOR CONTROL/DISCONNECT SWITCH

TELECOM SYSTEM

TELECOMMUNICATION OUTLET

TELECOMMUNICATION OUTLET–MOUNTED HIGH–SEE MOUNTING DETAILS

MODIFIERS FOR TELECOM OUTLETS:

CP = FOR CONTROL PANEL
TA = TELECOM OUTLET IN 'ARF' AREA
TAW = TELECOM OUTLET IN 'ARF' AREA WITH WEATHERPROOF COVER
TC = TELECOM OUTLET NOT IN 'ARF' AREA
WAP–A = WIRELESS ACCESS POINT OUTLET IN 'ARF' AREA
WAP–B = WIRELESS ACCESS POINT OUTLET NOT IN 'ARF' AREA

SEE E205 FOR 'ARF' AREA AND RISER 1/E303 FOR SYSTEM SPECIFICS AND FOR SPECIFICS OF EACH TELECOM OUTLET TYPE

FIRE ALARM SYSTEM

F — FIRE ALARM MANUAL PULL STATION

S — FIRE ALARM SMOKE DETECTOR–PHOTOELECTRIC TYPE

S IO — FIRE ALARM SMOKE DETECTOR–IONIZATION TYPE

S DD — FIRE ALARM DUCT MOUNTED SMOKE DETECTOR–PHOTOELECTRIC TYPE

H — FIRE ALARM THERMAL DETECTOR

MODIFIERS FOR THERMAL DETECTORS:

135/RR = COMBINATION 135 DEGREE AND RATE–OF–RISER TYPE
190 = HIGH TEMP 190 DEGREE TYPE

F — FIRE ALARM STROBE LIGHT–MODIFIER INDICATES MINIMUM STROBE CANDELA IF GREATER THAN 15

F — FIRE ALARM HORN/STROBE LIGHT–MINIMUM STROBE CANDELA SHALL BE 15–MODIFIER INDICATES MINIMUM STROBE CANDELA IF GREATER THAN 15

F — FIRE ALARM HORN/STROBE LIGHT–CEILING MOUNTED–MINIMUM STROBE CANDELA SHALL BE 15–MODIFIER INDICATES MINIMUM STROBE CANDELA IF GREATER THAN 15

F — FIRE ALARM STROBE LIGHT–CEILING MOUNTED–MINIMUM STROBE CANDELA SHALL BE 15–MODIFIER INDICATES MINIMUM STROBE CANDELA IF GREATER THAN 15

FIRE ALARM REMOTE ALARM INDICATING LIGHT WITH KEY TEST SWITCH

FM EF — FIRE ALARM MODULE FOR EXHAUST FAN CONTROL/SHUTDOWN

FM AH — FIRE ALARM MODULE FOR AIR HANDLER CONTROL/SHUTDOWN

FARA — FIRE ALARM REMOTE ANNUNCIATOR

FADC — FIRE ALARM DOCUMENT CABINET

FAFP — FIRE ALARM FRAMED FLOOR PLAN

SECURITY SYSTEM – SURVEILLANCE

C — CAMERA OUTLET–CEILING MOUNT

MODIFIERS FOR OUTLETS:

CA = FOR OUTLETS IN 'ARF' AREA
CB = FOR OUTLETS NOT IN THE 'ARF' AREA

SEE E205 FOR 'ARF' AREA AND RISER 2/E303 FOR PURPOSE AND SPECIFICS FOR EACH CAMERA OUTLET TYPE

TELEMETRY SYSTEM

T — TELEMETRY OUTLET IN WALL

T — TELEMETRY OUTLET IN CEILING

MODIFIERS FOR OUTLETS:

TS = FOR TELEMETRY STAND
CA = FOR TELEMETRY CAMERA
HE = FOR TELEMETRY HEAD END EQUIPMENT

SEE RISER 1/E304 FOR PURPOSE AND SPECIFICS FOR EACH TELEMETRY OUTLET TYPE–COORDINATE EXACT LOCATION OF OUTLET WITH EQUIPMENT PROVIDER/INSTALLER SUCH THAT IT IS LOCATED AT THE LOCATION AS RECOMMENDED BY EQUIPMENT MANUFACTURER

EQUIPOTENTIAL PLANE SYSTEM

G GA — EQUIPOTENTIAL PLANE GROUNDING OUTLET TYPE 'A'–46" AFF

G GB — EQUIPOTENTIAL PLANE GROUNDING OUTLET TYPE 'B'–FOR WET LOCATION–66" AFF

SEE RISER 2/E304 FOR SYSTEM SPECIFICS AND DETAIL 8/E404 FOR PURPOSE AND SPECIFICS FOR EACH GROUNDING OUTLET TYPE

ISOLATED POWER SYSTEM

LM — LINE ISOLATION MONITOR ALARM–46" AFF

MODIFIERS FOR DEVICES AND OUTLETS

WP — WEATHERPROOF–PROVIDE WEATHERPROOF COVER FOR DEVICE AND OUTLET–RECEPTACLES SHALL BE WEATHER RESISTANT TYPE

12 12 — A NUMBER ADJACENT TO A DEVICE OR OUTLET INDICATES THE BRANCH CIRCUIT THE DEVICE OR OUTLET SHALL BE CIRCUITED

32" 46" — A DIMENSION ADJACENT TO A DEVICE, FIXTURE OR OUTLET INDICATES THE ELEVATION AFF TO BE MOUNTED TO CENTER OF OUTLET UNO

RATED WALLS

1 HOUR RATED WALL

2 HOUR RATED WALL

4 HOUR RATED WALL

ABBREVIATIONS

A	AMP
AIC	AMPS INTERRUPTING CAPACITY
AFC	ABOVE FINISHED CEILING
AFF	ABOVE FINISHED FLOOR
AFG	ABOVE FINISHED GRADE
AHU	AIR HANDLING UNIT
AL	ALUMINUM
ARF	ANIMAL RESEARCH FACILITY - SEE E205 FOR AREA AND REQUIREMENTS - GENERALLY AN AREA OF A BUILDING AS DESIGNATED BY NIH
AST	ABOVEGROUND STORAGE TANK
ATS	AUTOMATIC TRANSFER SWITCH
AWTC	ANIMAL WATER TIME CLOCK
BC	BARE COPPER
BFF	BELOW FINISHED FLOOR
BFG	BELOW FINISHED GRADE
C	CONDUIT
CDWP	CONDENSER WATER PUMP
CHWP	CHILLED WATER PUMP
CMU	CONCRETE MASONRY UNIT
CRAHU	COMPUTER ROOM AIR HANDLING UNIT
CU	COPPER
DACT	DIGITAL ALARM COMMUNICATOR TERMINAL
D	DEEP
D.E.	DUAL ELEMENT
EF	EXHAUST FAN
EMT	ELECTRICAL METALLIC TUBING CONDUIT
EG	EQUIPMENT GROUND
FAA	FIRE ALARM ANNUNCIATOR
FAJB	FIRE ALARM JUNCTION BOX
FACP	FIRE ALARM CONTROL PANEL
FADACT	FIRE ALARM DIGITAL ALARM COMMUNICATOR TERMINAL
FADC	FIRE ALARM DOCUMENT CABINET
FAFP	FIRE ALARM FLOOR PLAN
FANACP	FIRE ALARM NOTIFICATION APPLIANCE CIRCUIT PANEL
FARA	FIRE ALARM REMOTE ANNUNCIATOR
FATC	FIRE ALARM TERMINAL CABINET
FWE	FURNISHED WITH EQUIPMENT
GEC	GROUNDING ELECTRODE CONDUCTOR
GEN	GENERATOR
GF	GROUND FAULT CIRCUIT INTERRUPTER
GFCI	GROUND FAULT CIRCUIT INTERRUPTER
GFP	GROUND FAULT PROTECTOR
H	HIGH
HVAC	HEATING, VENTILATING, AND AIR CONDITIONING
HWP	HOT WATER PUMP
IG	ISOLATED GROUND
IGB	INTERSYSTEM GROUND BAR
IMC	INTERMEDIATE METAL CONDUIT
LCTC	LIGHTING CONTROL TIME CLOCK
LFMC	LIQUIDTIGHT FLEXIBLE METAL CONDUIT
MCB	MAIN CIRCUIT BREAKER
MCC	MOTOR CONTROL CENTER
MDP	MAIN DISTRIBUTION PANEL
MDS	MAIN DISTRIBUTION SWITCHBOARD
MLO	MAIN LUGS ONLY
MNCP	MAIN NURSE CALL PANEL
MTP	MAIN TELECOMMUNICATIONS PANEL
MTS	MANUAL TRANSFER SWITCH
MTV	MAIN TELEVISION PANEL
NCSBC	NORTH CAROLINA STATE BUILDING CODE
NEC	NATIONAL ELECTRICAL CODE
NFPA	NATIONAL FIRE PROTECTION ASSOCIATION
N	NEUTRAL
NCP	NURSE CALL PANEL
NCTC	NURSE CALL TERMINAL CABINET
NIH	NATIONAL INSTITUES OF HEALTH
OFCI	OWNER FURNISHED, CONTRACTOR INSTALLED
OFOI	OWNER FURNISHED, OWNER INSTALLED
PDM	POWER DISTRIBUTION MODULE
PC	PHOTOCELL
PNL	PANEL
PVC	POLYVINYL CHLORIDE CONDUIT
PF	POWER FACTOR
PTS	PRIORITY TRANSFER SWITCH
R.A.	RETURN AIR
RMC	RIGID METAL CONDUIT
S.A.	SUPPLY AIR
SE	SERVICE ENTRANCE
SDS	SECONDARY DISTRIBUTION SWITCHBOARD
STP	SHIELDED TWISTED PAIR
TC	TIME CLOCK
TP	TELECOMMUNICATIONS PANEL
TRANSF.	TRANSFORMER
TYP	TYPICAL
TVSS	TRANSIENT VOLTAGE SURGE SUPPRESSOR
UNO	UNLESS NOTED OTHERWISE
UL	UNDERWRITERS LABORATORIES
UPS	UNINTERRUPTIBLE POWER SYSTEM
UST	UNDERGROUND STORAGE TANK
UTP	UNSHIELDED TWISTED PAIR
W	WIDE
WP	WEATHERPROOF

ELECTRICAL DRAWING INDEX

DRAWING	DESCRIPTION
ES101	ELECTRICAL SITE PLAN-DEMOLITION
ES102	ELECTRICAL SITE PLAN-RENOVATION
E001	ELECTRICAL LEGEND
E002	NOTES, SCHEDULES
E201	FLOOR PLAN - LIGHTING
E202	FLOOR PLAN - POWER, TELECOM
E203	FLOOR PLAN - FIRE ALARM, BUILDING SECTION-ELECTRICAL SYSTEMS
E204	FLOOR PLAN - SECURITY, TELEMETRY
E205	EQUIPMENT PLATFORM - LIGHTING, POWER/TELECOM AND TELEMETRY, AND FIRE ALARM, FLOOR PLAN-ELECTRICAL SYSTEMS
E301	RISERS
E302	RISERS
E303	RISERS
E304	RISERS
E401	PANEL SCHEDULES, DETAILS
E402	DETAILS
E403	DETAILS
E404	DETAILS
E405	DETAILS
E406	DETAILS
E407	DETAILS

Wagner Architecture, pllc
92 ELAM COURT
NEW HILL, NORTH CAROLINA 27562
TEL. (919) 612.5050

Kramer Engineering Services, pllc
5517 Cascade Dr, Chapel Hill, NC 27514
TEL (919)933-3350
email: donna@kespllc.com
Firm license: P-1099

bennett&pless
formerly LHC STRUCTURAL ENGINEERS
5430 Wade Park Blvd, Suite 400
Raleigh, NC 27607
Tel 919 832 5587

Copyright 2022 • Bennett & Pless, Inc.
All Rights Reserved

B & P Job Number 22.08.048

NV5
NV5 ENGINEERS AND CONSULTANTS, INC.
3300 REGENCY PARKWAY, STE 100
CARY, NC 27518
P: 919.851.1912 www.NV5.com
NC License #F-1333
formerly CALYX Engineers + Consultants

NORTH CAROLINA PROFESSIONAL SEAL 14917 ENGINEER DONNA D. KRAMER 5/18/2023

PREPARED FOR
NORTH CAROLINA STATE UNIVERSITY
COLLEGE OF VETERINARY MEDICINE

TRUE NORTH
PLAN NORTH

TRANSLATIONAL RESEARCH FACILITY

revisions

building number

cadd file number

drawn by JEY

checked by DDK

date ISSUED FOR CONSTRUCTION 05/18/2023

project number
NCSU CODE: 42124
ITEM: 305
WA 202207
SCO#: 21–24030–01A

ELECTRICAL LEGEND

sheet number: E001

revision number:

GENERAL NOTES

1– ALL ELECTRICAL DEVICES, FIXTURES, EQUIPMENT, CIRCUITRY AND ASSOCIATED APPURTENANCES SHALL BE INSTALLED IN ACCORDANCE WITH THE PROJECT SPECIFICATIONS, THE MANUFACTURER'S RECOMMENDED INSTALLATION PROCEDURES, ALL APPLICABLE LOCAL AND STATE CODES, THE AMERICAN DISABILITIES ACT AND WITH THE LATEST EDITION OF THE NATIONAL ELECTRICAL CODE. PROVIDE ALL MATERIALS AND INSTALL EQUIPMENT TO MEET ALL NECESSARY REQUIREMENTS.

2– COORDINATE ANY AND ALL WORK WITH ALL OTHER TRADES PRIOR TO INSTALLATION SO AS TO AVOID CONFLICT DURING CONSTRUCTION, IN ORDER TO PROVIDE REQUIRED CODE AND MANUFACTURER'S CLEARANCE OF ELECTRICAL AND OTHER EQUIPMENT, AND TO PREVENT THE OPERATION OF ELECTRICAL OR OTHER EQUIPMENT FROM HAVING A DETRIMENTAL AFFECT UPON ANY OTHER EQUIPMENT.

3– VERIFY CEILING SYSTEMS AND PROVIDE MOUNTING ACCESSORIES, TRIMS AND ALL REQUIRED MOUNTING HARDWARE TO SUIT THE PARTICULAR INSTALLATION.

4– MOUNTING HEIGHTS INDICATED ARE TO CENTER OF DEVICE, OUTLET, FIXTURE OR EQUIPMENT UNLESS NOTED OTHERWISE.

5– RECEPTACLES AND TELECOMMUNICATION OUTLETS SHOWN ADJACENT ON DRAWINGS SHALL BE MOUNTED 8" APART ON CENTER HORIZONTALLY.

6– THE CONTRACTOR SHOULD READ AND UNDERSTAND THE SPECIFICATIONS/CONSTRUCTION MANUAL PORTION OF THE CONSTRUCTION DOCUMENTS SO THAT HE MAY CONVEY THE PROPER REQUIRED MATERIALS AND METHOD OF INSTALLATION TO THE ESTIMATORS, SUPPLIERS AND INSTALLERS.

7– THE CONTRACTOR SHALL CAREFULLY REVIEW THE ENTIRE SET OF ELECTRICAL DRAWINGS INCLUDING RISERS AND DETAILS, AND SHALL PROVIDE AN INSTALLATION IN FULL COMPLIANCE WITH THE ENTIRE SET OF CONSTRUCTION DOCUMENTS.

8– MANUFACTURER'S NAME AND MODEL NUMBER ARE GIVEN FOR DESCRIPTIVE PURPOSES, TO INDICATE A QUALITY STANDARD AND ARE NOT INTENDED TO LIMIT PRODUCTS TO A PARTICULAR MANUFACTURER. PRODUCTS DEEMED EQUAL AND APPROVED BY THE DESIGNER WILL BE ACCEPTED.

9– THE STATE CONSTRUCTION OFFICE (SCO) IS THE AUTHORITY HAVING JURISDICTION (AHJ) FOR THE ELECTRICAL INSPECTIONS ON THIS PROJECT. IT IS THE RESPONSIBILITY OF THE ELECTRICAL CONTRACTOR TO NOTIFY THE ELECTRICAL INSPECTORS IN THE STATE CONSTRUCTION OFFICE TO SCHEDULE THE REQUIRED UNDERGROUND, ROUGH–IN, ABOVE CEILING, AND FINAL INSPECTIONS, AS APPLICABLE. NO WORK WILL BE COVERED UP UNTIL AFTER THE INSPECTION HAS BEEN COMPLETED AND APPROVED BY AN AUTHORIZED SCO INSPECTOR.

10– THE ONLY JUNCTION BOXES ALLOWED ABOVE THE GYP BOARD CEILING ARE BOXES SPECIFICALLY FOR AND SERVING RECESSED TROFFER TYPE LIGHT FIXTURES (1X4, 2X2, 2X4) IN THE CEILING, AND BOXES LOCATED AT ACCESS DOORS INDICATED ON THE ARCHITECTURAL DRAWING REFLECTED CEILING PLAN FOR THE SURGICAL LIGHTS. ANY OTHER JUNCTION BOX LOCATIONS ABOVE GYP BOARD CEILING REQUIRING ACCESS DOORS ARE PROHIBITED. SEE ELECTRICAL DRAWINGS FOR ALLOWED LOCATIONS OF BOXES ABOVE THE CEILING AT THE EQUIPMENT PLATFORM.

11– ALL THREADED CONDUIT CONNECTIONS SHALL HAVE A CONDUIT THREAD COMPOUND APPLIED PER THE SPECIFICAITONS.

12– ALL CONDCUTOR TERMINATIONS IN PANELS OR OTHER EQUIPMENT OUTSIDE, AND ALL EXPOSED WIRE TERMINALS IN ANIMAL HOLDING ROOMS SHALL HAVE AN APPLICATION OF ELECTRICALLY CONDUCTIVE TERMINAL COMPOUND APPLIED PER THE SPECIFICATIONS.

13– ALL BOXES AND PLASTER RINGS SHALL BE MOUNTED WITH DEVICE/COVER SCREW HOLES AT THE TOP AND BOTTOM SUCH THAT DEVICES AND COVERS CAN BE MOUNTED VERTICALLY.

14– IT IS CRITICAL THAT ALL BOXES BE MOUNTED PLUMB AND LEVEL, AND THAT THE FACE OF THE BOX OR PLASTER RING BE FLUSH WITH THE PLANE OF THE WALL OR CEILING, AND NOT PROTRUDE FROM THE PLANE OF THE WALL OR CEILING, AS MOST COVERS AND FACEPLATES CANNOT BE ADJUSTED TO COMPENSATE.

POWER OUTAGE/SHUTDOWN NOTES

1– INSTALLING THE ELECTRICAL FEEDER TO THE NEW TRANSLATIONAL RESEARCH FACILITY ('TRF') BUILDING WILL REQUIRE TEMPORARY SHUTDOWN OF THE OPTIONAL STANDBY POWER GENERATOR AND ASSOCIATED DISTRIBUTION SYSTEM AT PANEL 'MP'. IT IS IMPERATIVE THAT THE INADVERTENT AND UNSCHEDULED SHUTDOWN IN THE BUILDINGS ON SITE SHALL BE AVOIDED, AND THAT THE SHUTDOWN TIME BE AS SHORT AS POSSIBLE. ANY SHUTDOWN SHALL BE PERFORMED IN AN ORDERLY MANNER ALLOWING THE OWNER TO BE PREPARED FOR OUTAGES.

2– INSTALLING A NEW FEEDER TO THE EXISTING PANEL 'DB2' AT THE GROUNDS SHOP BUILDING WILL REQUIRE TEMEPORARY SHUTDOWN OF THE EXISTING PANEL 'MDPA' AND THE EXISTING PANEL 'DB2'. THESE PANELS SERVE POWER TO IMPORTANT EQUIPMENT IN VARIOUS OTHER BUILDINGS ON SITE. IT IS IMPERATIVE THAT THE INADVERTENT AND UNSCHEDULED SHUTDOWN OF THIS EQUIPMENT IN OTHER BUILDINGS ON SITE SHALL BE AVOIDED, AND THAT THE SHUTDOWN TIME BE AS SHORT AS POSSIBLE. ANY SHUTDOWN SHALL BE PERFORMED IN AN ORDERLY MANNER ALLOWING THE OWNER TO BE PREPARED FOR OUTAGES.

3– THE FOLLOWING WORK SHALL BE PERFORMED PRIOR TO ANY ELECTRICAL POWER SHUTDOWN:

A) COORDINATE WITH THE OWNER AND DEVELOP AN ORDERLY SEQUENCE AND TIME LINE FOR EQUIPMENT SHUTDOWN AND RECONNECTION.

B) COORDINATE WITH THE OWNER TO DETERMINE WHAT IMPORTANT EQUIPMENT IN OTHER BUILDINGS WILL BE SHUTDOWN, AND THE PROPOSED TIMELINE FOR SHUTDOWN AND RECONNECITON OF POWER. THE CONTRACTOR SHALL COORDINATE WITH THE OWNER SUCH THAT THE EQUIPMENT IS SERVED BY A TEMPORARY POWER SOURCE AND/OR THAT THE EQUIPMENT IS SHUTDOWN IN AN ORDERLY SHUTDOWN PROCESS WITHOUT THE NEED FOR TEMPORARY POWER.

C) COORDINATE WITH THE OWNER AND WHERE REQUIRED PERFORM SHUTDOWNS IN SEPARATE INCREMENTS OF THE DISTRIBUTION SYSTEM AND/OR IN SEPARATE INCREMENTS OF TIME AS TO HAVE THE LEAST IMPACT ON THE OPERATION OF THE FACILITY. COORDINATE WITH OWNER AND WHERE REQUIRED BY THE OWNER PERFORM WORK IN SUCH AN INCREMENTAL MANNER THAT POWER IS SHUTDOWN, WORK IS PARTIALLY PERFORMED, THEN POWER IS RECONNECTED FOR A PERIOD OF TIME, AND THE REMAINDER OF WORK IS COMPLETED AT ANOTHER INTERVAL OF TIME.

5– ANY SHUTDOWN OF POWER EQUIPMENT WILL REQUIRE A THREE WEEK NOTICE TO THE OWNER.

6– ENSURE ALL ELECTRICAL WORK IS DONE DEENERGIZED. SPECIFICALLY, WHERE ELECTRICAL EQUIPMENT IS OPENED EXPOSING LIVE PARTS OR CONDUCTORS, OR BREAKERS ARE REMOVED OR INSTALLED, OR WHERE ELECTRICAL CONNECTIONS ARE MODIFIED, ALL POWER AT THE PANEL OR ENCLOSURE SHALL BE DEENERGIZED AT ITS SOURCE PRIOR TO WORK BEING DONE.

7– WHERE OCCUPIED AREAS OUTSIDE OF PROJECT AREA ARE AFFECTED BY DEENERGIZATION, COORDINATION SHALL BE DONE TO MINIMIZE SERVICE INTERRUPTION DURING THE REQUIRED SHUTDOWN.

8– CONTRACTOR SHALL COORDINATE WITH NCSU AND OWNER PROJECT MANAGER ON HAZARDOUS ENERGY ISOLATION AND SHALL AFFIX THEIR OWN LOCKS FOR LOCKOUT/TAGOUT.

9– ALL TESTING, TROUBLESHOOTING, LOCKOUT/TAGOUT AND VERIFICATION OF DEENERGIZATION IS TO BE DONE IN ACCORDANCE WITH APPLICABLE NFPA 70E AND OSHA 29 CFR PART 1910 SUBPARTS R&S REQUIREMENTS, INCLUDING ESTABLISHING, AND ISOLATING IF NEEDED, SHOCK PROTECTIVE AND ARC FLASH PROTECTIVE APPROACH BOUNDARIES AND DONNING PERSONAL PROTECTIVE EQUIPMENT APPROPRIATE FOR THE HAZARD.

NIH ANIMAL RESEARCH FACILITY (ARF) NOTES

1– THE BUILDING CONTAINS AN 'ANIMAL RESEARCH FACILITY' AREA AS DEFINED BY NIH (NATIONAL INSTITUTES OF HEALTH). THE AREA DESIGNATED AS SUCH ON THE DRAWINGS IS AN 'ANIMAL RESEARCH FACILITY', AND SPECIFIC CONSTRUCTION MATERIALS AND INSTALLATION APPLIES TO THIS AREA. SEE DRAWING E205 FOR THE DESIGNATED AREA AND ITS REQUIREMENTS.

COORDINATION OF WORK PERFORMED BY OTHERS

1– OTHER THAN THE REQUIRED COORDINATION WITH OTHER CONTRACTORS AS GENERALLY PERFORMED IN CONSTRUCTION AND COORDINATION MENTIONED ELSEWHERE IN THE CONSTRUCTION DOCUMENTS, THE ELECTRICAL CONTRACTOR SHALL COORDINATE THE FOLLOWING WORK PERFORMED BY OTHERS AND DIRECTLY RELATED TO THE LOGISTICS AND WORK OF THE ELECTRICAL CONTRACTOR.

2– THE ELECTRICAL CONTRACTOR SHALL BE RESPONSIBLE FOR BOTH GATHERING AND PROVIDING ACCURATE INFORMATION WITH ALL PARTIES AND CLOSE COORDINATION WITH THESE ISSUES TO PREVENT CONFLICT IN THE FIELD.

3– THE ELECTRICAL CONTRACTOR SHALL COORDINATE THE FOLLOWING AS RELATED TO THE ELECTRICAL WORK:

a– FURNITURE & CASEWORK: COORDINATE WALL OUTLETS BELOW, ABOVE AND NEAR FURNITURE/CASEWORK WITH FURNITURE/CASEWORK SUPPORT BRACKETS, FINAL INSTALLATION DETAILS AND WITH THE INSTALLER SUCH THAT OUTLETS DO NOT INTERFERE WITH INSTALLATION OF THE SUPPORT BRACKETS OR OTHER CONSTRUCTION OF THE FURNITURE/CASEWORK.

b– PLUMBING FIXTURES: COORDINATE WALL OUTLETS BELOW, ABOVE AND NEAR PLUMBING FIXTURES, INCLUDING BUT NOT LIMITED TO ALL SINKS OR LAVATORIES WITH ELECTRONIC FAUCET AND SCRUB SINK IN ROOM 107, WITH PLUMBING CONTRACTOR AND FINAL INSTALLATION DETAILS AND WITH THE PLUMBING FIXTURE INSTALLER SUCH THAT OUTLETS DO NOT INTERFERE WITH THE FIXTURES AND PIPING.

c– CONCRETE WORK: COORDINATE WITH OTHER CONTRACTORS INSTALLING THE BUILDING INTERIOR SLAB AND THE SIDEWALK AT THE ENTRANCES. ENSURE THE STEEL REINFORCING IS TIGHTLEY BONDED AND CONTINUOUSLY ELECTRICALLY CONDCUTIVE IN ORDER TO MEET THE REQUIREMENTS OF NEC 547–AGRICULTURAL BUILDINGS. SEE THE EQUIPOTENTIAL PLANE RISER ON E304.

d– COORDINATE WITH THE MECHANICAL CONTRACTOR SUCH THAT THEY PROVIDE A CHANNEL SYSTEM AT VFD'S, STARTERS AND CONTROL PANELS OF A SIZE AND CONFIGURATION SUITABLE FOR THE INSTALLATION OF ELECTRICAL EQUIPMENT, CONDUIT AND OUTLETS SERVING THIS EQUIPMENT.

e– COORDINATE RECEPTACLES, DISCONNECTS AND OUTLETS FOR EQUIPMENT WHICH IS PROVIDED BY OTHERS (GENERAL, MECHANICAL OR PLUMBING CONTRACTORS, OWNER, LAB EQUIPMENT SUPPLIER, ETC.). VERIFY EXACT LOCATION OF REQUIRED RECEPTACLE, DISCONNECT OR OUTLET, AND ASSOCIATED EQUIPMENT CONNECTION REQUIREMENTS AND PROVIDE SUCH REQUIREMENTS AS RECOMMENDED BY EQUIPMENT MANUFACTURER AND/OR SUPPLIER.

f– ELECTRIC HOIST AND REEL IN ROOMS 107A AND 111 – THE ELECTRICAL CONTRACTOR SHALL PROVIDE CONDUIT, OUTLETS, LOCAL DISCONNECT SWITCH AND POWER WIRING FOR THE FINAL INSTALLATION OF THE HOIST. THE ELECTRICAL CONTRACTOR SHALL REQUEST THE HOIST AND REEL SUBMITTAL, INCLUDING SITE PREPARATION GUIDE/PRE–INSTALL MANUAL OR OTHER INSTALLATION INFORMATION, IN ORDER TO COORDINATE THE INSTALLATION, AND SHALL PROVIDE CONDUIT, OUTLETS AND POWER WIRING PER THE MANUFACTURER'S REQUIREMENTS. COORDINATE CAREFULLY WITH ALL INFORMATION AND THE HOIST AND REEL INSTALLER.

4– FINAL CONNECTION TO EQUIPMENT PROVIDED BY THE OWNER OR OTHERS

a– WHERE EQUIPMENT IS PROVIDED BY THE OWNER OR OTHERS (MECHANICAL CONTRACTOR, PLUMBING CONTRACTOR, ETC.) IT IS THE RESPONSIBILITY OF THOSE WHO PROVIDE THE EQUIPMENT TO MAKE FINAL CONNECTIONS TO THE EQUIPMENT. THIS INCLUDES FINAL POWER WIRING FROM THE DISCONNECT, OUTLET OR BREAKER OR OTHER ELECTRICAL EQUIPMENT TO THE EQUIPMENT PROVIDED BY THE OWNER OR OTHERS. THE ELECTRICAL CONTRACTOR SHALL NOTIFY THE OWNER OR OTHERS OF THEIR RESPONSIBILITY FOR FINAL CONNECTIONS AT THE BEGINNING OF THE PROJECT.

5– EQUIPMENT PROVIDED BY THE OWNER – THE FOLLOWING IS A BRIEF DESCRIPTION OF THE EQUIPMENT AND SYSTEMS FURNISHED BY THE OWNER. SEE COMPLETE ELECTRICAL DRAWINGS AND SPECIFICATIONS FOR FURTHER DESCRIPTION.

a– SURGICAL LIGHTS (OFCI) – THE OWNER WILL FURNISH SURGICAL LIGHTS TO BE INSTALLED BY THE GENERAL CONTRACTOR. THE ELECTRICAL CONTRACTOR SHALL PROVIDE CONDUIT AND POWER WIRING FOR THE FINAL INSTALLATION OF THE SURGICAL LIGHTS. THE ELECTRICAL CONTRACTOR SHALL REQUEST THE SURGICAL LIGHT SUBMITTAL, INCLUDING SITE PREPARATION GUIDE/PRE–INSTALL MANUAL OR OTHER INSTALLATION INFORMATION, IN ORDER TO COORDINATE THE INSTALLATION, AND SHALL PROVIDE CONDUIT AND POWER WIRING PER THE MANUFACTURER'S REQUIREMENTS.

b– VOICE/DATA TELECOMMUNICATION SYSTEM – THE OWNER SHALL FURNISH AND THE ELECTRICAL CONTRACTOR SHALL INSTALL THE TELECOM CABINET. THE ELECTRICAL CONTRACTOR SHALL PROVIDE A SYSTEM OF MOUNTING CHANNEL, CONDUIT, BOXES AND OUTLETS. THE OWNER SHALL FURNISH AND INSTALL ALL TELECOM CABLE, FACEPLATE, WEATHERPROOF FACEPLATE/PORTS, STANDARD PORTS, PUNCH BLOCKS, WIRE MANAGEMENT AND VOICE/DATA/SWITCH EQUIPMENT. THE CONTRACTOR SHALL COORDINATE CLOSELY WITH THE NCSU PROJECT MANAGER AND THE NCSU COMTECH GROUP INSTALLERS FOR COMPLETION OF THE SYSTEM.

c– VOICE/DATA TELECOMMUNICATION OUTLETS – THE CONTRACTOR SHALL COORDINATE CLOSELY WITH THE OWNER ON OUTLETS WITHIN THE 'ARF' AREA. THE OWNER SHALL FURNISH AND INSTALL OVERSIZED FACEPLATE/COVERS IN ORDER FOR THE COVER TO ADEQUATELY COVER WHERE THE BOX MEETS THE WALL FINISH. THE OWNER SHALL FURNISH AND INSTALL WEATHERPROOF FACEPLATE/PORTS AT TELECOM OUTLETS IN HOLDING ROOMS. SEE 'OWNER NOTES' ON TELECOM RISER ON DRAWING E303.

d– SECURITY/SURVEILLANCE SYSTEM – THE ELECTRICAL CONTRACTOR SHALL PROVIDE A SYSTEM OF CONDUIT, BOXES AND OUTLETS. THE OWNER SHALL FURNISH AND INSTALL ALL SECURITY/SURVEILLANCE CABLE, CAMERAS AND EQUIPMENT. THE CONTRACTOR SHALL COORDINATE CLOSELY WITH THE NCSU PROJECT MANAGER AND THE NCSU SECURITY GROUP INSTALLERS FOR COMPLETION OF THE SYSTEM.

e– TELEMETRY SYSTEM – THE OWNER WILL CONTRACT SEPARATELY WITH DATA SCIENCES INTERNATIONAL (DSI) FOR PROVIDING AND INSTALLING THE TELEMETRY SYSTEM. THE ELECTRICAL CONTRACTOR SHALL PROVIDE CONDUIT, BOXES, POWER WIRING AND ASSOCIATED APPURTENANCES AS INDICATED ON THE DRAWINGS. ALL TELEMETRY OUTLETS SHALL HAVE BLANK COVERS. DSI SHALL PROVIDE TELEMETRY EQUIPMENT AND SIGNAL/COMMUNICATIONS WIRING FOR THE SYSTEM. THE CONTRACTOR SHALL COORDINATE CLOSELY WITH THE NCSU PROJECT MANAGER AND DSI FOR COMPLETION OF THE SYSTEM.

TOTAL CONNECTED LOAD

DESCRIPTION	TOTAL CONNECTED kVA	TOTAL CONNECTED AMPS AT 208V, 3 PHASE, 4	DEMAND NOTES	DEMAND FACTOR	DEMAND kVA
LIGHTS	4.29	11.92		1.25	5.36
EXTERIOR LIGHTS	0.21	0.58		1.25	0.26
EMERGENCY LIGHTS	0.40	1.11		1.25	0.50
RECEPTACLES	15.30	42.50	Note 1		12.65
HEATING PUMPS	12.38	34.39	Note 2	0.27	3.34
COOLING PUMPS	3.81	10.58	Note 3	0.75	2.86
AIR HANDLERS	25.30	70.28	Note 2	0.47	11.89
EXHAUST/VENT	8.63	23.97	Note 2	0.37	3.19
WATER HTR.	12.00	33.33	Note 4	0.67	8.08
LAB EQUIPMENT	0.62	1.72	Note 4	0.50	0.31
MISC	9.13	25.36	Note 4	0.75	6.85
DEMAND OF LARGEST MOTOR					1.50
TOTAL - NEW BUILDING - TRANSLATIONAL RESEARCH FACILITY ('TRF')	92.07	255.74			56.79
TOTAL DEMAND - DIARY BARN - RECENTLY DESIGNED AND SERVED FROM PANEL 'MP' (UNDER CONSTRUCTION)					92.17
EXISTING PEAK DEMAND OF PANEL 'MP' X 1.25 - NOTE 5					264.38
EXISTING PANEL 'MP' SERVICE TOTAL DEMAND kVA					413.33
EXISTING PANEL 'MP' SERVICE TOTAL DEMAND AMPS					1148
SERVICE AMPERAGE					1200

Notes:

1- First 10kVA at 100% & remainder over 10kVA at 50%

2- Demand is based on actual required horsepower of mechancial system design. Mechancial system has 'N+1' design, and is controlled by VFD.

3- Demand is based on actual required horsepower of mechancial system design. Units are controlled by VFD.

4- Demand factor based on intermittent use, duty cycle, or non-simultaneous operation of equipment.

5- Existing Panel 'MP' is the main distribution panel of the existing distribution system which serves various buildings on the site, and will serve the new Tranlational Research Facility ('TRF').

LIGHT FIXTURE SCHEDULE

TYPE	SOURCE, LUMEN & LUMEN MAINT	VOLTAGE	SIZE	WATTS	DESCRIPTION	MANUFACTURER/MODEL AND INSTALLATION NOTES (SEE NOTES AT BOTTOM FOR LED, LED DRIVER)
A	LED 4000 MIN LUMEN L70 @ MIN 60k HRS	120/277	4' LONG X 2.75"W X 2.25" H	29	LED-INDUSTRIAL LIGHT DIE FORMED STEEL HOUSING PAINT AFTER FABRICATION, 1) 0-10V CCR DIMMING DRIVER	LITHONIA #MSL-4000LM-MVOLT-GZ10-40K-80CRI-WH OR APPROVED EQUAL BY COOPER, HUBBELL, LITHONIA
B2	LED 8011 LUMEN L70 @ MIN 60k HRS	120/277	1' x 4' x 4 1/2" D	72	LED-RECESSED FLANGE STATIC ENVIRONMENTAL TROFFER, FLUSH WHITE ONE PIECE STEEL DOOR FRAME, SEALED/GASKETED, .125" MIN. PRISMATIC IMPACT ACRYLIC LENS, WET LOCATION, MEETS STANDARDS IP65, NSF2, CLASS 100,	KENALL #CSEDI-14-67L-40K8-DIM1-DV-2F-4H-SYM-IF OR APPROVED EQUAL BY COOPER, HUBBELL, LITHONIA
B3R	LED 10221 LUMEN L70 @ MIN 60k HRS	120/277	1' x 4' x 4 1/2" D	97	SAME AS 'B2' EXCEPT LUMENS UNO WITH RADIO FREQUENCY FILTER	KENALL #CSEDI-14-90L-40K8-DIM1-DV-2F-4H-SYM-RF-IF OR APPROVED EQUAL BY COOPER, HUBBELL, LITHONIA
B4R	LED 5230 LUMEN L70 @ MIN 60k HRS	120/277	1' x 4' x 4 1/2" D	49	SAME AS 'B2' EXCEPT LUMENS UNO WITH RADIO FREQUENCY FILTER	KENALL #CSEDI-14-45L-40K8-DIM1-DV-2F-4H-SYM-RF-IF OR APPROVED EQUAL BY COOPER, HUBBELL, LITHONIA
B4ER	LED 5230 LUMEN L70 @ MIN 60k HRS	120/277	1' x 4' x 4 1/2" D	49	SAME AS 'B2' EXCEPT LUMENS UNO WITH RADIO FREQUENCY FILTER AND EMERGENCY BATTERY PACK	KENALL #CSEDI-14-45L-40K8-DIM1-DV-2F-4H-SYM-RF-LEL-IF OR APPROVED EQUAL BY COOPER, HUBBELL, LITHONIA WIRE BATTERY PACK SO IT IS NORMALLY SWITCHED OFF
B11	LED 2530 LUMEN (TUNE 5230 DOWN TO 2530) L70 @ MIN 60k HRS	120/277	1' x 4' x 4 1/2" D	25	SAME AS 'B2' EXCEPT LUMENS SHALL BE TUNED DOWN AT MFR UNO	KENALL #CSEDI-14-45L-40K8-DIM1-DV-2F-4H-SYM-IF- (MFR SHALL TUNE TO 2530 LUMENS) OR APPROVED EQUAL BY COOPER, HUBBELL, LITHONIA
B22	LED 6709 LUMEN (TUNE 8011 DOWN TO 6709) L70 @ MIN 60k HRS	120/277	1' x 4' x 4 1/2" D	72	SAME AS 'B2' UNO FIXTURE SHALL HAVE TWO CIRCUIT WIRING	KENALL #CSEDI-14-67L-40K8-DIM1-DV-2F-4H-SYM-2C-IF (MFR SHALL TUNE TO 6709 LUMENS) OR APPROVED EQUAL BY COOPER, HUBBELL, LITHONIA
C1	LED 5556 LUMEN L70 @ MIN 60k HRS	120/277	2' X 2' x 4 1/2" D	49	LED-RECESSED FLANGE STATIC ENVIRONMENTAL TROFFER, FLUSH WHITE ONE PIECE STEEL DOOR FRAME, SEALED/GASKETED, .125" MIN. PRISMATIC IMPACT ACRYLIC LENS, WET LOCATION, MEETS STANDARDS IP65, NSF2, CLASS 100,	KENALL #CSEDI-22-45L-40K8-DIM1-DV-2F-4H-SYM-IF OR APPROVED EQUAL BY COOPER, HUBBELL, LITHONIA
D2	LED 9331 LUMEN L70 @ MIN 60k HRS	120/277	2' x 4' x 4 1/2" D	72	LED-RECESSED FLANGE STATIC ENVIRONMENTAL TROFFER, FLUSH WHITE ONE PIECE STEEL DOOR FRAME, SEALED/GASKETED, .125" MIN. PRISMATIC IMPACT ACRYLIC LENS, WET LOCATION, MEETS STANDARDS IP65, NSF2, CLASS 100,	KENALL #CSEDI-24-67L-40K8-DIM1-DV-2F-4H-SYM-IF OR APPROVED EQUAL BY COOPER, HUBBELL, LITHONIA
D3	LED 11990 LUMEN L70 @ MIN 60k HRS	120/277	2' x 4' x 4 1/2" D	97	SAME AS 'D2' EXCEPT LUMENS UNO	KENALL #CSEDI-24-90L-40K8-DIM1-DV-2F-4H-SYM-IF OR APPROVED EQUAL BY COOPER, HUBBELL, LITHONIA
D4R	LED 11990 LUMEN L70 @ MIN 60k HRS	120/277	2' x 4' x 4 1/2" D	97	SAME AS 'D2' EXCEPT LUMENS UNO WITH RADIO FREQUENCY FILTER	KENALL #CSEDI-24-90L-40K8-DIM1-DV-2F-4H-SYM-RF-IF OR APPROVED EQUAL BY COOPER, HUBBELL, LITHONIA
D4ER	LED 11990 LUMEN L70 @ MIN 60k HRS	120/277	2' x 4' x 4 1/2" D	97	SAME AS 'D2' EXCEPT LUMENS UNO WITH RADIO FREQUENCY FILTER AND EMERGENCY BATTERY PACK	KENALL #CSEDI-24-90L-40K8-DIM1-DV-2F-4H-SYM-RF-LEL-IF OR APPROVED EQUAL BY COOPER, HUBBELL, LITHONIA WIRE BATTERY PACK SO IT IS NORMALLY SWITCHED OFF
D12	LED 6709 LUMEN L70 @ MIN 60k HRS	120/277	2' x 4' x 4 1/2" D	46	SAME AS 'D2' EXCEPT LUMENS UNO FIXTURE SHALL HAVE TWO CIRCUIT WIRING	KENALL #CSEDI-24-45L-40K8-DIM1-DV-2F-4H-SYM-2C-IF OR APPROVED EQUAL BY COOPER, HUBBELL, LITHONIA
D22	LED 9331 LUMEN L70 @ MIN 60k HRS	120/277	2' x 4' x 4 1/2" D	72	SAME AS 'D2' UNO FIXTURE SHALL HAVE TWO CIRCUIT WIRING	KENALL #CSEDI-24-67L-40K8-DIM1-DV-2F-4H-SYM-2C-IF OR APPROVED EQUAL BY COOPER, HUBBELL, LITHONIA
E1	NO LAMPS	120/ 12V DC	27"W X 8"D X 12"H	400	EMERGENCY BATTERY SYSTEM, REMOTE CAPABILITY LEAD CALCIUM BATTERY, 240W, 2 HR. SOLID STATE TRANSFER, AUTOMATIC BATTERY EXERCISER ADVANCED DIAGNOSTICS, MOUNTING SHELF	EMERGI-LITE #12LC300-0-ADNA-MOUNTING SHELF OR APPROVED EQUAL BY COOPER, HUBBELL, LITHONIA MOUNT AT 6'-6" AFF TO TOP
E2	LED	12V DC	13"W X 9"H	1.5	EXIT LIGHT-SINGLE FACE, CEILING MOUNT DIE CAST ALUMINUM HOUSING (BLACK) BRUSHED ALUMINUM FACE, RED POLYCARB. PANEL NO BATTERY, DC ONLY REMOTE POWERED FROM FIXTURE 'E1'	EMERGI-LITE #BA-PU-1-R-DL OR APPROVED EQUAL BY COOPER, HUBBELL, LITHONIA
E3	LED	12V DC	6"L X 5"W x 4"D	7	EMERGENCY LIGHT-RECESSED, CEILING, REMOTE LINEAR DISTRIBUION PATTERN REMOTE POWERED FROM FIXTURE 'E1'	EMERGI-LITE #W-RAR-DC-P OR APPROVED EQUAL BY COOPER, HUBBELL, LITHONIA MOUNT SUCH THAT LINEAR DISTRIBUTION PATTERN IS ORIENTED SAME AS SHAPE OF SPACE
E4	LED	12V DC	6"L X 5"W x 4"D	7	EMERGENCY LIGHT-RECESSED, CEILING, REMOTE SQUARE DISTRIBUTION PATTERN REMOTE POWERED FROM FIXTURE 'E1'	EMERGI-LITE #W-RAR-DC-P-SQ OR APPROVED EQUAL BY COOPER, HUBBELL, LITHONIA
E6	LED	12V DC	7"W X 10"H X 3"D	18	EMERGENCY LIGHT-WALL MOUNT, EXTERIOR, REMOTE DIE CAST ALUMINUM HOUSING, NEMA 3R LATERAL WIDE THROW DISTRIBUTION PATTERN REMOTE POWERED FROM FIXTURE 'E1'	EMERGI-LITE #BZ-LUX-DC-H OR APPROVED EQUAL BY COOPER, HUBBELL, LITHONIA MOUNT 11'-0" AFF TO BOTTOM
E7	LED	12V DC	7"W X 10"H X 3"D	18	EMERGENCY LIGHT-WALL MOUNT, EXTERIOR, REMOTE DIE CAST ALUMINUM HOUSING, NEMA 3R FORWARD THROW DISTRIBUTION PATTERN REMOTE POWERED FROM FIXTURE 'E1'	EMERGI-LITE #BZ-LUX-DC-FT-H OR APPROVED EQUAL BY COOPER, HUBBELL, LITHONIA MOUNT 11'-0" AFF TO BOTTOM
F	LED 1500 MIN L90 @ 55k HRS	120/277	8" APERT. x 5" H (5" MAX HEIGHT)	16	LED-RECESSED DOWNLIGHT, DIFFUSED LENSED UPPER OPTICAL, SELF FLANGED SPUN ALUMINUM LOWER REFLECTOR, SEMI SPECULAR CLEAR, WET LOCATION, NON-IC RATED,	PORTFOLIO #LD8B-15-D010-ER8B-1020-8040-8LB-S-1-H OR APPROVED EQUAL BY COOPER, HUBBELL, LITHONIA
G	LED 3000 LUMEN L95 @ 50k HRS	120/277	12"W X 5"H X 5"D	25	LED-WALL MOUNT OUTDOOR SCONCE, DIE CAST ALUMINUM HOUSING, POWDER COAT PAINT FINISH, ACRYLIC LENS, N0 UPLIGHT, WET LOCATION, TEXTURED DARK BRONZE FINISH,	LITHONIA #ARC1LED-P3-40K-MVOLT-SPD6KV-DDBXD OR APPROVED EQUAL BY COOPER, HUBBELL, LITHONIA MOUNT 9'-0" AFF TO TOP

LIGHT FIXTURE SCHEDULE NOTES

1– THE MANUFACTURER AND MODEL NUMBER ARE LISTED TO GIVE A DESCRIPTION AND STANDARD OF QUALITY ONLY, AND DO NOT LIMIT PRODUCTS TO A PARTICULAR MANUFACTURER UNLESS NOTED OTHERWISE. FIXTURES MANUFACTURED BY THE FOLLOWING MANUFACTURERS THAT ARE DEEMED EQUAL AND APPROVED BY THE DESIGNER WILL BE ACCEPTED:
A. COOPER GROUP LIGHTING
B. HUBBELL GROUP LIGHTING
C. LITHONIA/ACUITY GROUP LIGHTING

2– FIXTURES SHALL BE PROVIDED WITH NECESSARY MOUNTING HARDWARE, OPTIONS AND COMPONENTS AS SPECIFIED AND AS REQUIRED FOR THE INSTALLATION. THE CONTRACTOR SHALL COORDINATE WITH THE ARCHITECTURAL DRAWINGS AND PROVIDE FIXTURE TRIM SUITABLE FOR THE CEILING FINISH. COORDINATE PARTICULAR BUILDING FIXTURE MOUNTING ARRANGEMENT REQUIREMENTS WITH FIXTURE, AND PROVIDE FIXTURE AND FIXTURE ACCESSORIES SUITABLE FOR BUILDING CEILING TYPE.

3– WHERE LEDS ARE DIMMED THE DIMMING SHALL BE CAPABLE OF DIMMING TO MINIMUM 5% OF NORMAL LIGHT OUTPUT UNLESS NOTED OTHERWISE. FIXTURE GROUP TYPES 'B', 'C' AND 'D' SHALL BE DIMMABLE TO 1%.

Wagner Architecture, pllc
92 ELAM COURT
NEW HILL, NORTH CAROLINA 27562
TEL. (919) 612.5050

Kramer Engineering Services, pllc
5517 Cascade Dr. Chapel Hill, NC 27514
TEL (919)933-3350
email: donna@kespllc.com
Firm license: P-1099

bennett&pless
formerly LHC STRUCTURAL ENGINEERS
5430 Wade Park Blvd, Suite 400
Raleigh, NC 27607
Tel 919 832 5587

Copyright 2022 • Bennett & Pless, Inc.
All Rights Reserved

B & P Job Number 22.08.048

NV5
NV5 ENGINEERS AND CONSULTANTS, INC.
3300 REGENCY PARKWAY, STE 100
CARY, NC 27518
P: 919.851.1912 www.NV5.com
NC License # F-1333
formerly CALYX Engineers + Consultants

NORTH CAROLINA PROFESSIONAL SEAL 14917 ENGINEER DONNA D. KRAMER 5/18/2023

PREPARED FOR
NORTH CAROLINA STATE UNIVERSITY
COLLEGE OF VETERINARY MEDICINE

TRUE NORTH
PLAN NORTH

TRANSLATIONAL RESEARCH FACILITY

revisions

building number

cadd file number

drawn by JEY

checked by DDK

date ISSUED FOR CONSTRUCTION 05/18/2023

project number NCSU CODE: 42124 ITEM: 305 WA 202207 SCO#: 21–24030–01A

NOTES, SCHEDULES

sheet number: E002

revision number:

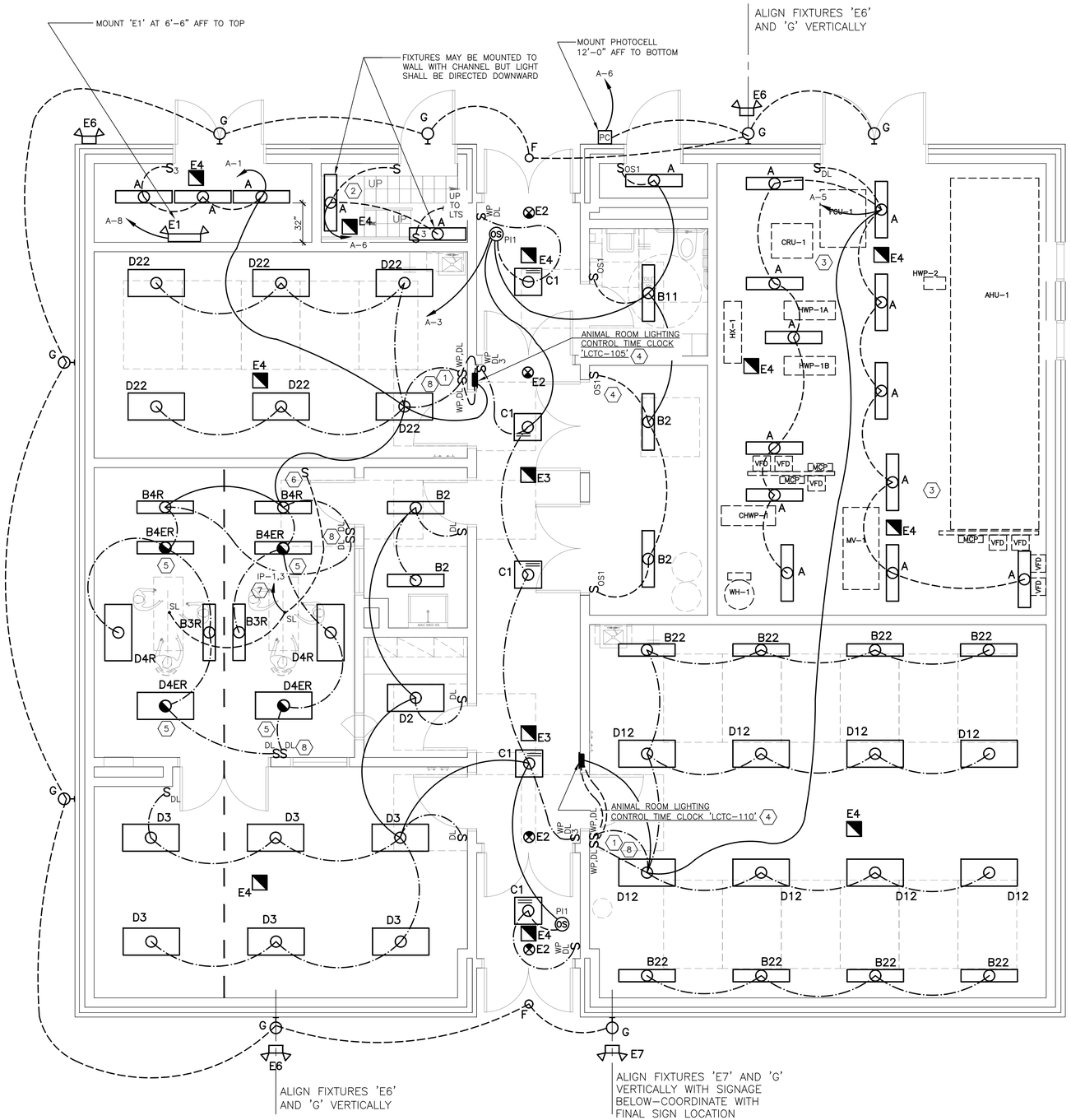

1 FLOOR PLAN – LIGHTING
E201 SCALE: 1/4"=1'-0"

KEY NOTES

1. LIGHT FIXTURES IN THE HOLDING ROOM WILL HAVE TWO SEPARATELY CONTROLLED LED DRIVERS SUCH THAT HALF THE LIGHTING IN EACH FIXTURE SHALL BE CONTROLLED SEPARATELY. THE SWITCH NEAREST THE DOOR SHALL CONTROL OUTBOARD LED MODULES AND SHALL BE CONTROLLED BY CHANNEL ONE IN THE TIME CLOCK. EACH OF THE TWO LIGHTING SWITCHLEG CIRCUITS SHALL BE CIRCUITED TO ONE OF THE TWO WALL DIMMER/SWITCHES RESPECTIVELY IN THE ROOM AS INDICATED. THEN CIRCUIT EACH OF THE TWO SWITCHLEGS FROM THE DIMMER/SWITCHES TO ONE OF THE TWO TIME CLOCK CHANNELS RESPECTIVELY AND THEN TO THE PANEL 'A' CIRCUIT AS INDICATED.
2. LIGHT FIXTURES IN SPACES INDICATED WITH NO CEILING SHALL BE MOUNTED 9'-0" AFF OR LANDING TO BOTTOM OF FIXTURE UNLESS PIPING OR DUCTWORK IS BELOW LIGHT WHEREIN THEN THE LIGHT FIXTURE SHALL BE MOUNTED AS HIGH AS POSSIBLE AND MINIMUM 6'-8" AFF TO BOTTOM.
3. LIGHT FIXTURES IN MECHANICAL ROOM SHALL BE MOUNTED 10'-0" AFF TO BOTTOM OF FIXTURE UNLESS PIPING OR DUCTWORK IS BELOW LIGHT WHEREIN THEN THE LIGHT FIXTURE SHALL BE MOUNTED AS HIGH AS POSSIBLE AND MINIMUM 6'-8" AFF TO BOTTOM. WHERE LIGHT FIXTURES ARE LOCATED NEAR PIPING OR DUCTWORK THE FIXTURE SHALL BE MOUNTED SUCH THAT THE BOTTOM OF THE FIXTURE IS AT THE SAME ELEVATION AS ANY PIPING OR DUCTWORK WITHIN 24" AND MINIMUM 6'-8" AFF TO BOTTOM. CONTRACTOR SHALL COORDINATE EXACT FINAL LOCATION OF PIPING AND DUCTWORK, AND ARRANGE AND LOCATE LIGHT FIXTURES TO ACCOMMODATE COMPLETE INSTALLATION AND PROVIDE ADEQUATE LIGHTING, AND TO ENSURE FIXTURES CAN BE EASILY ACCESSED FOR MAINTENANCE USING A STEP LADDER.
4. TIME CLOCK SHALL BE DIGITAL TIME CLOCK WITH REMOVABLE MEMORY MODULE FOR PROGRAMMING. INSTALL TIME CLOCK IN 12"W X 16"H X 6" D SEMI-RECESSED NEMA 4 ENCLOSURE WITH HINGED DOOR, AND LOCKING FLUSH LATCH. ENCLOSURE SHALL PROTRUDE FROM WALL MAXIMUM 3". ENCLOSURE SHALL BE SEMI-RECESSED WITH FLANGE. SEE DETAILS ON DRAWINGS.

   FIXTURES WITH EMERGENCY BATTERY PACK SHALL BE WIRED SUCH THAT THE EMERGENCY LIGHT IS NORMALLY SWITCHED/OFF. PROVIDE A HOT LEAD FROM THE SAME CIRCUIT AS THE NORMAL LIGHTS TO THE BATTERY PACK.
5. FIXTURES WITH EMERGENCY BATTERY PACK SHALL BE WIRED SUCH THAT THE EMERGENCY LIGHT IS NORMALLY SWITCHED/OFF. PROVIDE A HOT LEAD FROM THE SAME CIRCUIT AS THE NORMAL LIGHTS TO THE BATTERY PACK.
6. SWITCH IS ONLY A LOCAL DISCONNECTING MEANS FOR MAINTENANCE OF BOTH SURGICAL LIGHTS AND DOES TURN OFF BOTH LIGHTS. SURGICAL LIGHTS WILL HAVE ON/OFF/CONTROL ON SURGICAL LIGHT. LABEL SWITCH 'SURGICAL LIGHTS'.
7. POWER WIRING SERVING SURGICAL LIGHTS IN 'SURGERY-107A' SHALL BE MINIMUM #10, TYPE XHHW-2.
8. MULTIPLE DEVICES SHOWN ADJACENT SHALL BE INSTALLED IN A MULTIGANG BOX WITH A SINGLE DEVICE COVER-TYPICAL.

PLAN NOTES

1- EMERGENCY AND EXIT LIGHTS 'E2', 'E3', 'E4', 'E6' AND 'E7' ON THIS FLOOR LEVEL AND ON THE EQUIPMENT PLATFORM SHALL BE CIRCUITED TO THE EMERGENCY BATTERY UNIT FIXTURE TYPE 'E1'.

OCCUPANCY SENSOR NOTES

1- THE CONTRACTOR SHALL SET ALL OCCUPANCY SENSORS AS INDICATED BELOW PRIOR TO INSTALLATION OF THE DEVICE. SEE THE PARTICULAR MANUFACTURER'S INSTALLATION AND SETUP INSTRUCTIONS FOR A FULL UNDERSTANDING ON SETTINGS.

TIME DELAY – SET TO AUTOSET FUNCTION WHERE PROVIDED ('SMARTSET' FOR WATTSTOPPER); WHERE AUTOSET IS NOT AN OPTION SET TO 20 MINUTES

PIR (PASSIVE INFRARED) SENSITIVITY – HIGH/MAX, OR SELF LEARNING WHERE AVAILABLE

VISIBLE ALERT – DISABLED

AUDIBLE ALERT – ENABLED; COORDINATE WITH OWNER TO DETERMINE IF AN AUDIBLE ALERT WOULD BE A NUISANCE, AND IF SO, DISABLE AUDIBLE ALERT.

ON MODE (RELAY 1) – AUTO

ON MODE (RELAY 2-WHERE PROVIDED) – MANUAL

WALK-THROUGH (WHERE PROVIDED) – ENABLED (UNLESS NOTED OTHERWISE)

2- SENSORS IN RESTROOMS SHALL BE SETUP SIMILAR TO ABOVE EXCEPT TIME DELAY SHALL BE MINIMUM 20 MINUTES, AND 'WALK-THROUGH' SETTING SHALL BE DISABLED.

3- PIR SENSORS WHICH ARE LOCATED SUCH THAT THE SENSOR IS ACTIVATED BY ACTIVITY OUTSIDE THE ROOM (SUCH AS PIR SENSORS MOUNTED PERPENDICULAR TO THE DOORWAY BESIDE THE DOOR OPENING) SHALL BE MASKED WITH SUPPLIED TAPE SUCH THAT THE SENSOR DOES NOT RESPOND TO ACTIVITY BEYOND THE ROOM BEING CONTROLLED. FOLLOW MANUFACTURER'S INSTRUCTIONS FOR MASKING THE DEVICE.

4- THE CONTRACTOR SHALL INSTALL, SETUP, OPERATE AND TEST ALL SENSORS FOR PROPER OPERATION BASED ON THE SETTINGS AND SHALL MAKE ADJUSTMENTS WHERE REQUIRED TO OBTAIN THE DESIRED RESULTS FOR THE PROPER OPERATION OF THE SYSTEM.

5- THE CONTRACTOR SHALL PROVIDE DOCUMENTATION TO THE OWNER ON OPERATION OF THE OCCUPANCY SENSOR SYSTEM AND SHALL REVIEW WITH THE OWNER THE OPERATION, CAPABILITIES AND LIMITATIONS OF THE SYSTEM UPON PROJECT COMPLETION. THE CONTRACTOR SHALL MAKE THE OWNER AWARE THAT HE WILL BE RETURNING FOR REVIEW OF THE SYSTEM AND TO MAKE ANY REQUIRED ADJUSTMENTS TO THE SYSTEM AFTER 30 DAYS OF OCCUPANCY AND NORMAL USE. THE CONTRACTOR SHALL DIRECT THE OWNER THAT THE OWNER SHOULD MONITOR AND DOCUMENT ANY AREAS/SENSORS WHICH MAY REQUIRE READJUSTMENT DURING THE FIRST 30 DAYS OF NORMAL OPERATION.

6- THE CONTRACTOR SHALL INCLUDE IN HIS WORK A RETURN VISIT TO THE SITE AND MEET WITH THE OWNER AND USERS OF THE BUILDING AFTER THE BUILDING HAS BEEN OCCUPIED UNDER NORMAL USE FOR 30 DAYS. DURING THE MEETING THE CONTRACTOR SHALL REVIEW WITH THE USERS THE AUTOMATIC AND MANUAL OPERATION OF THE OCCUPANCY SENSORS, SENSITIVITIES, AND LIMITATIONS OF THE SENSORS. THE CONTRACTOR SHALL DETERMINE THE SATISFACTION OF THE SETTINGS AND OPERATION OF THE SENSORS, AND SHALL MAKE ADJUSTMENTS AT THAT TIME FOR THE PROPER OPERATION OF THE SYSTEM BASED UPON USER COMMENTS.

9- WHERE DIMMING IS INCLUDED WITH THE OCCUPANCY SENSOR, THE CONTROLLER SHALL BE SETUP SUCH THAT UPON OCCUPANCY OF THE SPACE THE DIMMER SHALL REVERT TO THE LAST DIMMING LEVEL SET.

9- WHERE THERE ARE MULTIPLE SENSORS IN A SPACE WHICH CONTROL THE LIGHTS THE SENSORS SHALL BE WIRED IN PARALLEL SUCH THAT ANY INDIVIDUAL SENSOR CAN MAINTAIN THE LIGHTING TO BE 'ON'. THE CONTRACTOR SHALL FOLLOW THE MANUFACTURER'S INSTALLATION AND WIRING INSTRUCTIONS FOR THIS TYPE OF OPERATION.

Wagner Architecture, pllc
92 ELAM COURT
NEW HILL, NORTH CAROLINA 27562
TEL. (919) 612.5050

Kramer Engineering Services, pllc
5517 Cascade Dr, Chapel Hill, NC 27514
TEL (919)933-3350
email: donna@kespllc.com
Firm license: P-1099

bennett&pless
formerly LHC STRUCTURAL ENGINEERS
5430 Wade Park Blvd, Suite 400
Raleigh, NC 27607
Tel 919 832 5587

Copyright 2022 • Bennett & Pless, Inc.
All Rights Reserved

B & P Job Number 22.08.048

NV5
NV5 ENGINEERS AND CONSULTANTS, INC.
3300 REGENCY PARKWAY, STE 100
CARY, NC 27518
P: 919.851.1912 www.NV5.com
NC License #F-1333
formerly CALYX Engineers + Consultants

NORTH CAROLINA PROFESSIONAL ENGINEER SEAL 14917 5/18/2023 DONNA D. KRAMER

PREPARED FOR
NORTH CAROLINA STATE UNIVERSITY
COLLEGE OF VETERINARY MEDICINE

TRUE NORTH
PLAN NORTH

TRANSLATIONAL RESEARCH FACILITY

revisions

building number

cadd file number

drawn by JEY

checked by DDK

date ISSUED FOR CONSTRUCTION 05/18/2023

project number
NCSU CODE: 42124
ITEM: 305
WA 202207
SCO#: 21-24030-01A

FLOOR PLAN-
LIGHTING

sheet number: E201

revision number:

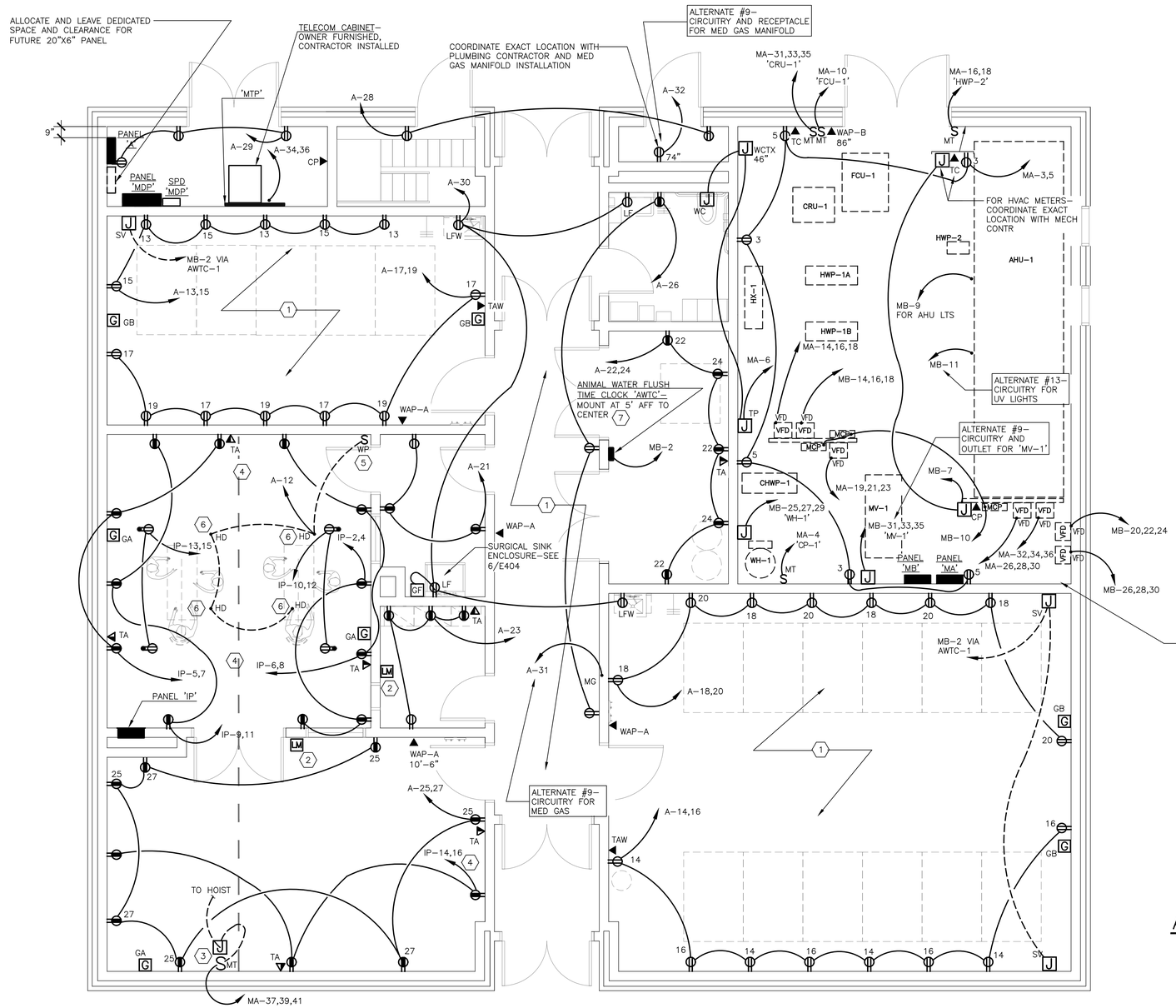

1 FLOOR PLAN – POWER, TELECOM
E202 SCALE: 1/4"=1'–0"

KEY NOTES

1. ALL RECEPTACLES IN ROOM SHALL BE WEATHERPROOF, GROUND FAULT CIRCUIT INTERRUPTER, AND SHALL BE MOUNTED 66" AFF TO CENTER. TELECOM OUTLETS SHALL BE MOUNTED 66" AFF TO CENTER. OWNER SHALL INSTALL HARSH ENVIRONMENT FACEPLATE/PORTS ON TELECOM OUTLETS. ALL GROUND OUTLETS IN ROOM SHALL BE MOUNTED 66" AFF TO CENTER.
2. ISOLATED POWER SYSTEM REMOTE LINE ISOLATION MONITOR (LIM). MOUNT AT 46" AFF TO CENTER.
3. 208V, 3P, 30A TOGGLE MANUAL MOTOR STARTING SWITCH AT 42" AFF FLUSH IN WALL, AND DOUBLE GANG JUNCTION BOX MOUNTED 10'–0" TO TOP AFF FLUSH IN WALL NEAR CEILING FOR MOTORIZED HOIST. COORDINATE WITH HOIST INSTALLER FOR EXACT LOCATION OF JUNCTION BOX NEAR CEILING. PROVIDE BLANK COVER ON JUNCTION BOX WITH 3/4" KNOCKOUT AND LFMC TO HOIST TERMINATION. LEAVE ADEQUATE WIRE AND LFMC LENGTH FOR FINAL CONNECTION TO HOIST BY HOIST INSTALLER. COORDINATE EXACT LOCATIONS WITH HOIST, HOIST REEL AND HOIST INSTALLER.
4. ALL WIRING IN AND SERVING OUTLETS IN 'SURGERY–107A' SHALL BE MINIMUM #10, TYPE XHHW–2, INCLUDING LIGHTING CIRCUITRY TO THE OVERHEAD SURGICAL LIGHTS AND CIRCUITRY FROM PANEL 'IP' WHICH SERVES RECEPTACLES IN 'INDUCTION & RECOVERY–111'.
5. SWITCH IS A LOCAL DISCONNECTING MEANS FOR HEPA DIFFUSERS AND IS INTENTIONALLY LOCATED BEHIND THE DOOR TO AVOID INADVERTENT OPERATION. LABEL 'HEPA DIFFUSERS'.
6. COORDINATE WIRING OF HEPA DIFFUSER SUCH THAT A JUNCTION BOX IS NOT NEEDED ABOVE CEILING AND AN ACCESS DOOR IS NOT NEEDED FOR ANY WIRING CONNECTION. COORDINATE FINAL INSTALLATION WITH PARTICULAR HEPA DIFFUSER AND MECHANICAL CONTRACTOR.
7. PROVIDE A RECESSED OUTLET BOX 12" ABOVE TOP OF TIME CLOCK WITH RMC FROM BOX TO TIME CLOCK.

TELECOM NOTES

1– THE TELECOM CABINET SHALL BE FURNISHED BY THE OWNER AND INSTALLED BY THE ELECTRICAL CONTRACTOR.

2– THE ELECTRICAL CONTRACTOR SHALL PROVIDE A SYSTEM OF CONDUIT, BOXES AND OUTLETS. THE OWNER SHALL FURNISH AND INSTALL ALL TELECOM CABLE, FACEPLATE, PORTS, PUNCH BLOCKS, WIRE MANAGEMENT AND VIOCE/DATA/SWITCH EQUIPMENT. THE CONTRACTOR SHALL COORDINATE CLOSELY WITH THE NCSU PROJECT MANAGER AND THE NCSU OIT COMTECH GROUP INSTALLERS FOR COMPLETION OF THE SYSTEM.

3– THE ELECTRICAL CONTRACTOR SHALL COORDINATE A MEETING EARLY IN THE PROJECT WITH THE NCSU PROJECT MANAGER AND THE NCSU OIT COMTECH GROUP IN ORDER TO PLAN AND ORGANIZE THE LOGISTICS OF THE PROJECT CONSTRUCTION AND FOR THE FINAL CABLE AND TELECOM EQUIPMENT INSTALLATION, TERMINATION AND TESTING BY THE OWNER, AND ALL OTHER ASPECTS OF THE TELECOM SYSTEM INSTALLATION.

'MECHANICAL–108' AND 'EQUIPMENT PLATFORM'---

1– THE ELECTRICAL CONTRACTOR SHALL COORDINATE WITH THE MECHANICAL AND PLUMBING DRAWINGS AND CONTRACTORS, AND PROVIDE A FEEDER/BRANCH CIRCUIT FROM THE APPROPRIATE ELECTRICAL PANEL AS INDICATED TO THE EQUIPMENT, MOTOR STARTER, VFD, MOTOR SWITCH OR JUNCTION BOX AS INDICATED. SEE MECHANICAL AND PLUMBING DRAWINGS FOR EQUIPMENT, MOTOR STARTER AND VFD LOCATIONS. TYPICAL FOR ALL MECHANICAL AND PLUMBING EQUIPMENT ON THE FLOOR PLAN AND THE EQUIPMENT PLATFORM. COORDINATE WITH THE CONTRACTORS AND SPECIFIC EQUIPMENT AND ENSURE THE LABELING ON BRANCH/FEEDER CIRCUITS MATCHES THE RESPECTIVE EQUIPMENT.

2– ALL EXPOSED CONDUIT IN 'MECHANICAL–108' FROM FLOOR TO 8'–0" AFF SHALL BE RMC OR IMC. CONDUIT ABOVE 8'–0" AFF MAY BE EMT.

3– ALL CONDUIT IN EQUIPMENT PLATFORM MAY BE EMT.

ALTERNATES

1– SEE THE ELECTRICAL DRAWING PLANS, AND THE ARCHITECTURAL DRAWINGS AND SPECIFICATIONS FOR THE FULL DESCRIPTION OF WORK INVOLVED FOR ALTERNATES.

A. ALTERNATE #9 – MED GAS SYSTEM

BASE BID: ALL CIRCUIT BREAKERS FOR THE MED GAS SYSTEM SHALL BE SPARE.

ADD ALTERNATE: PROVIDE ALL CIRCUITRY, OUTLETS AND CONNECTIONS FOR THE MED GAS SYSTEM WHICH INCLUDES THE MED GAS VACUUM PUMP, MED GAS ALARM AND MED GAS MANIFOLD SYSTEM.

B. ALTERNATE #13 – AHU UV LIGHTS

BASE BID: CIRCUIT BREAKER FOR THE AHU UV LIGHTS SHALL BE SPARE.

ADD ALTERNATE: PROVIDE ALL CIRCUITRY, AND CONNECTIONS FOR THE AHU UV LIGHTS.

Wagner Architecture, pllc
92 ELAM COURT
NEW HILL, NORTH CAROLINA 27562
TEL. (919) 612.5050

Kramer Engineering Services, pllc
5517 Cascade Dr. Chapel Hill, NC 27514
TEL (919)933-3350
email: donna@kespllc.com
Firm license: P-1099

bennett&pless
formerly LHC STRUCTURAL ENGINEERS
5430 Wade Park Blvd, Suite 400
Raleigh, NC 27607
Tel 919 832 5587

Copyright 2022 • Bennett & Pless, Inc.
All Rights Reserved

B & P Job Number 22.08.048

NV5 ENGINEERS AND CONSULTANTS, INC.
3300 REGENCY PARKWAY, STE 100
CARY, NC 27518
P: 919.851.1912 www.NV5.com
NC License #F-1333
formerly OLLN Engineers + Consultants

NORTH CAROLINA PROFESSIONAL ENGINEER SEAL 14917 5/18/2023 DONNA D. KRAMER

PREPARED FOR
NORTH CAROLINA STATE UNIVERSITY
COLLEGE OF VETERINARY MEDICINE

TRUE NORTH
PLAN NORTH

TRANSLATIONAL RESEARCH FACILITY

revisions

building number

cadd file number

drawn by JEY

checked by DDK

date ISSUED FOR CONSTRUCTION 05/18/2023

project number
NCSU CODE: 42124
ITEM: 305
WA 202207
SCO#: 21–24030–01A

FLOOR PLAN-
POWER, TELECOM

sheet number: E202

revision number:

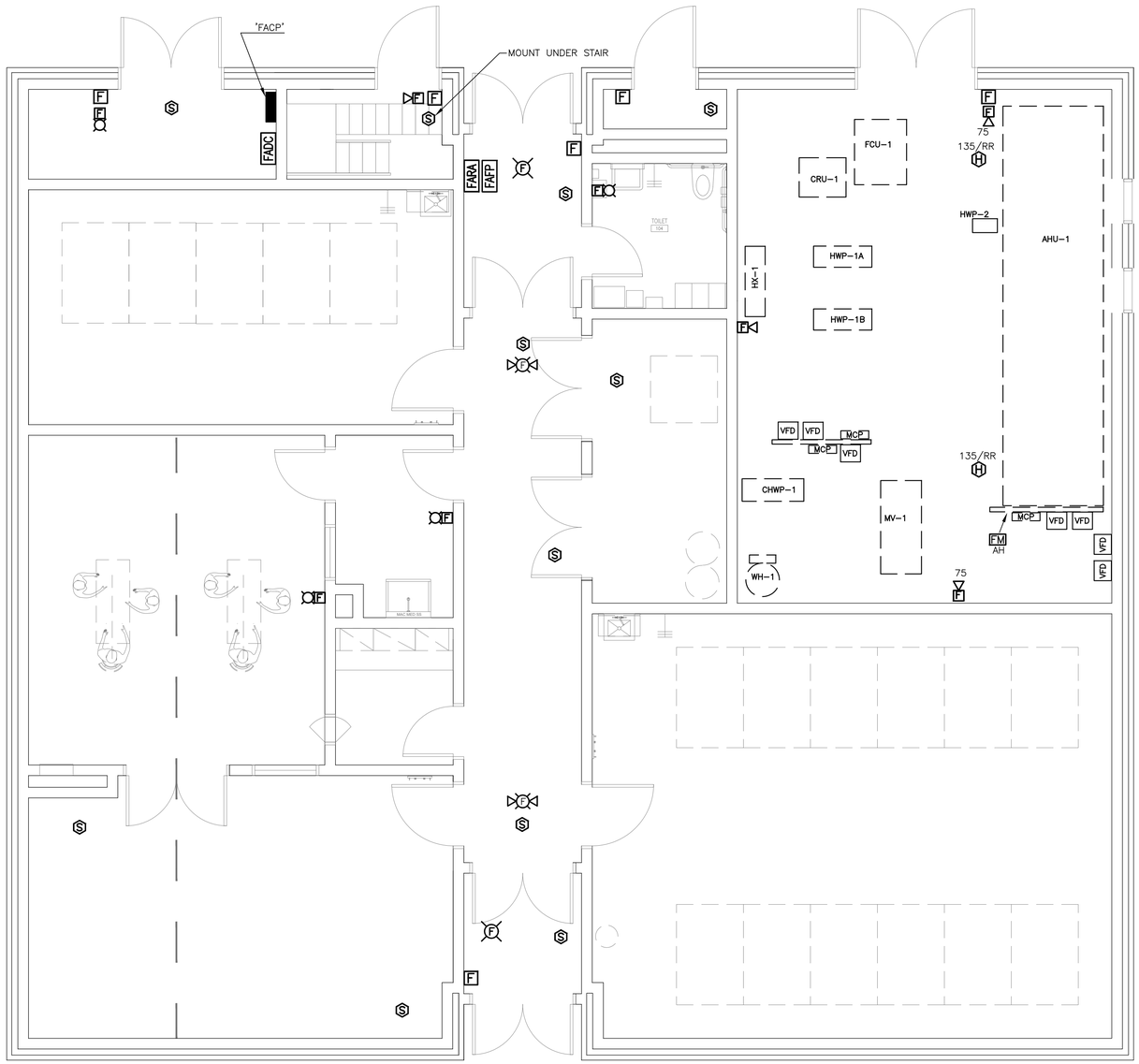

PLAN NOTES

1– IN 'MECH–108' MOUNT DETECTORS AT CEILING/ROOF PER NFPA 72. COORDINATE EXACT LOCATION WITH DUCT AND PIPING SUCH THAT DEVICES CAN BE ACCESSED FOR SERVICE, AND PROVIDE FINAL DETECTOR LAYOUT IN COMPLIANCE WITH NFPA 72 FOR SPACING INCLUDING REDUCED SPACING FACTOR FOR HEIGHT OF DEVICE.

2– THE CONTRACTOR SHALL COORDINATE CLOSELY WITH THE FIRE ALARM SUPPLIER AND THE DEVICES TO BE INSTALLED IN THE 'ARF' AREA (SEE E205) AND ENSURE THE PROPER CAST ALUMINUM BOX SIZE WITH EXTERNAL HUB IS INSTALLED FOR THE DEVICE SUCH THAT THE DEVICE FITS IN AND/OR ON THE CAST ALUMINUM BOX INSTALLED, AND SUCH THAT THE DEVICE COMPLETELY COVERS THE INSTALLED BOX. NO PART OF THE BOX SHALL BE EXPOSED AFTER THE DEVICE IS INSTALLED. IT IS IMPERATIVE THAT THE CONTRACTOR COORDINATE THIS INSTALLATION WITH THE FIRE ALARM SUPPLIER PRIOR TO INSTALLING CAST BOXES.

1 / E203 FLOOR PLAN – FIRE ALARM
SCALE: 1/4"=1'–0"

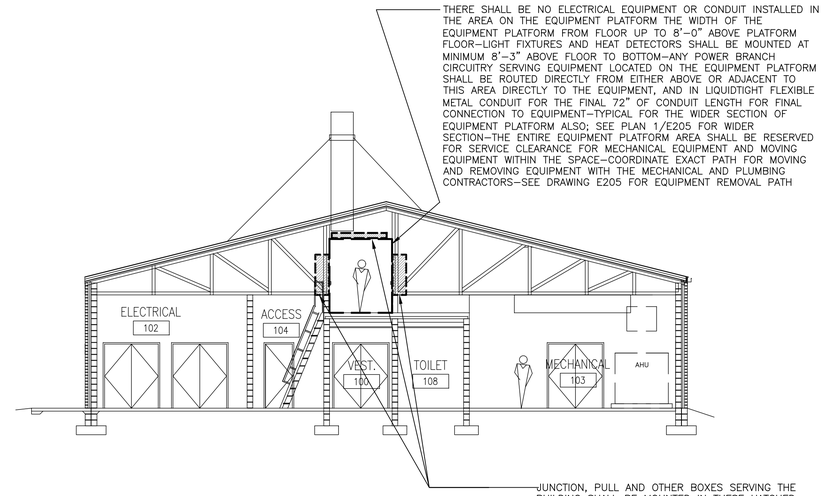

NOTES

IT IS IMPERATIVE THAT THE ELECTRICAL CONTRACTOR COORDINATE WITH THE MECHANICAL AND PLUMBING CONTRACTORS AND OTHERS FOR ROUTING LOCATION OF CONDUIT AND INSTALLATION OF BOXES AND OTHER EQUIPMENT ABOVE THE CEILING AND IN THE EQUIPMENT PLATFORM AREA IN ORDER TO AVOID CONFLICT WITH DUCT AND OTHER EQUIPMENT BEING INSTALLED IN THE AREA. THERE ARE DUCT AIR VALVES, SENSORS IN DUCTS AND OTHER MECHANICAL/PLUMBING EQUIPMENT WHICH ARE ON THE PLATFORM AND JUST BEYOND THE EDGE OF THE PLATFORM ABOVE THE CEILING BELOW WHICH WILL REQUIRE ACCESS AND SERVICE, AND THERE SHALL BE NO CONDUIT, BOXES OR OTHER ELECTRICAL EQUIPMENT INSTALLED IN SUCH A MANNER AS TO IMPEDE ACCESSING THIS EQUIPMENT.

2 / E203 BUILDING SECTION – ELECTRICAL SYSTEMS
NOT TO SCALE

Wagner Architecture, pllc
92 ELAM COURT
NEW HILL, NORTH CAROLINA 27562
TEL. (919) 612.5050

Kramer Engineering Services, pllc
5517 Cascade Dr. Chapel Hill, NC 27514
TEL (919)933-3350
email: donna@kespllc.com
Firm license: P-1099

bennett&pless
formerly LHC STRUCTURAL ENGINEERS
5430 Wade Park Blvd, Suite 400
Raleigh, NC 27607
Tel 919 832 5587
Copyright 2022 • **Bennett & Pless, Inc.**
All Rights Reserved
B & P Job Number 22.08.048

NV5
NV5 ENGINEERS AND CONSULTANTS, INC.
3300 REGENCY PARKWAY, STE 100
CARY, NC 27518
P: 919.851.1912 www.NV5.com
NC License #F-1333
formerly CALYX Engineers + Consultants

NORTH CAROLINA PROFESSIONAL ENGINEER SEAL 14917 5/18/2023 DONNA D. KRAMER

PREPARED FOR
NORTH CAROLINA STATE UNIVERSITY
COLLEGE OF VETERINARY MEDICINE

TRUE NORTH
PLAN NORTH

TRANSLATIONAL RESEARCH FACILITY

revisions

building number

cadd file number

drawn by JEY

checked by DDK

date ISSUED FOR CONSTRUCTION 05/18/2023

project number
NCSU CODE: 42124
ITEM: 305
WA 202207
SCO#: 21–24030–01A

FLOOR PLAN-FIRE ALARM, BUILDING SECTION-ELECTRICAL SYSTEMS

sheet number: E203
revision number:

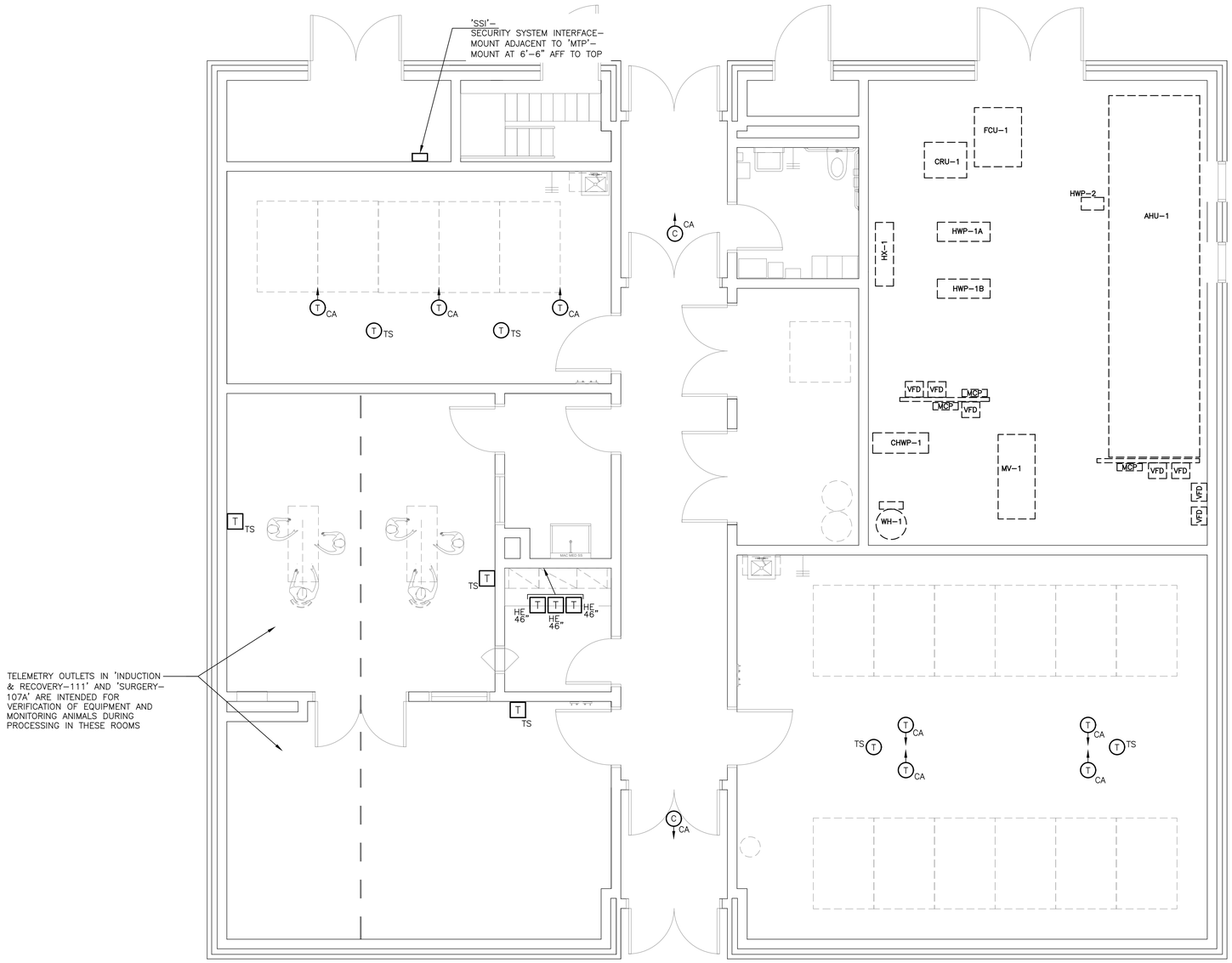

1 E204 FLOOR PLAN – SECURITY & TELEMETRY
SCALE: 1/4'=1'–0"

Wagner Architecture, pllc
92 ELAM COURT
NEW HILL, NORTH CAROLINA 27562
TEL. (919) 612.5050

Kramer Engineering Services, pllc
5517 Cascade Dr, Chapel Hill, NC 27514
TEL (919)933-3350
email: donna@kespllc.com
Firm license: P-1099

bennett&pless
formerly LHC STRUCTURAL ENGINEERS
5430 Wade Park Blvd, Suite 400
Raleigh, NC 27607
Tel 919 832 5587

Copyright 2022 • **Bennett & Pless, Inc.**
All Rights Reserved

B & P Job Number 22.08.048

NV5
NV5 ENGINEERS AND CONSULTANTS, INC.
3300 REGENCY PARKWAY, STE 100
CARY, NC 27518
P: 919.851.1912 www.NV5.com
NC License #F-1333
formerly CALYX Engineers + Consultants

NORTH CAROLINA PROFESSIONAL ENGINEER SEAL 14917 5/18/2023 DONNA D. KRAMER

PREPARED FOR
NORTH CAROLINA STATE UNIVERSITY
COLLEGE OF VETERINARY MEDICINE

TRUE NORTH
PLAN NORTH

TRANSLATIONAL RESEARCH FACILITY

revisions

building number

cadd file number

drawn by JEY

checked by DDK

date ISSUED FOR CONSTRUCTION 05/18/2023

project number
NCSU CODE: 42124
ITEM: 305
WA 202207
SCO#: 21–24030–01A

FLOOR PLAN-SECURITY & TELEMETRY

sheet number: E204

revision number:

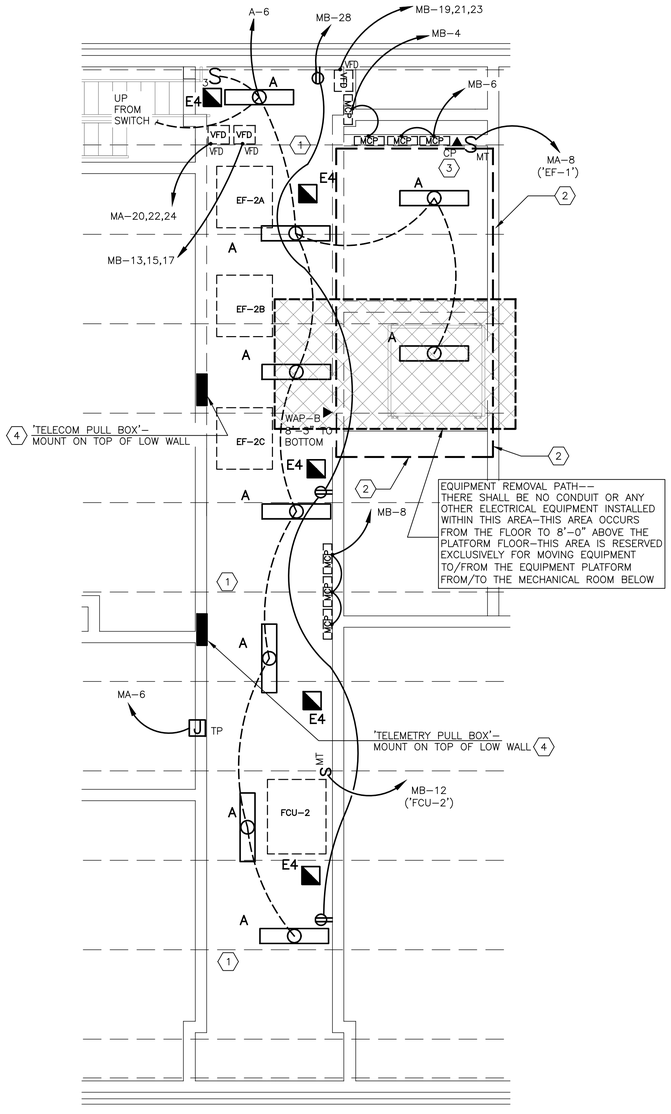

NOTE – MOUNT TYPE 'E4' FIXTURES EXPOSED/SUSPENDED AT SIMILAR ELEVATION AS INDICATED IN KEY NOTE 1 BELOW. ENSURE FIXTURE IS AT AN ELEVATION AND LOCATION SUCH THAT IT PROPERLY LIGHTS THE EQUIPMENT PLATFORM AREA.

1 / E205 EQUIPMENT PLATFORM – LIGHTING, POWER/TELECOM, AND TELEMETRY

SCALE: 1/4"=1'–0"

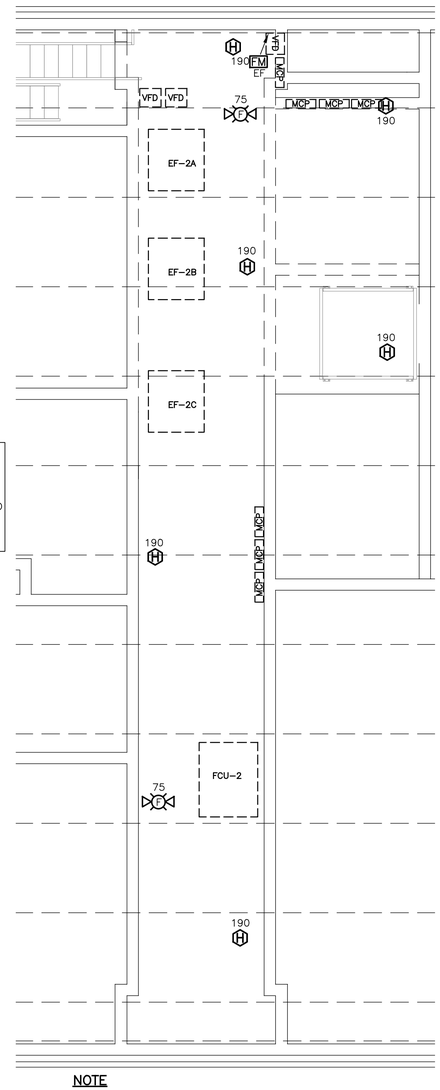

NOTE

MOUNT DETECTORS AT CEILING/ROOF PER NFPA 72. COORDINATE EXACT LOCATION WITH DUCT AND PIPING SUCH THAT DEVICES CAN BE ACCESSED FOR SERVICE, AND PROVIDE FINAL DETECTOR LAYOUT IN COMPLIANCE WITH NFPA 72 FOR SPACING INCLUDING REDUCED SPACING FACTOR FOR HEIGHT OF DEVICE.

2 / E205 EQUIPMENT PLATFORM – FIRE ALARM

SCALE: 1/4"=1'–0"

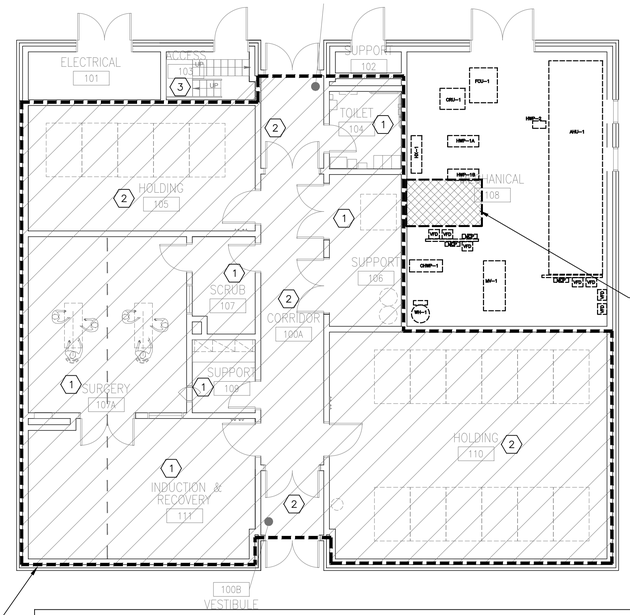

ANIMAL RESEARCH FACILITY (ARF) AREA

THE ANIMAL RESEARCH FACILITY (ARF) AREA IS INDICATED BY THE HEAVY DASHED LINE AND HATCHED AREA. THE ARF AREA IS DEFINED AS THE AREA WITHIN THE FINISHED WALLS, CEILING AND FLOOR OF THE DESIGNATED AREA. WITHIN/ENTIRELY INSIDE WALLS, ENTIRELY ABOVE CEILING AND BELOW FLOOR ARE NOT DESIGNATED AS THE ARF AREA.

ARF AREA: THE PROJECT COMPRISES AN ARF AREA BASED ON NATIONAL INSTITUTES OF HEALTH (NIH) DESIGN REQUIREMENTS. AS SUCH THE ARF AREA REQUIRES A PARTICULAR TYPE OF MATERIAL AND CONSTRUCTION TO ACHIEVE A DEGREE OF CONTAINMENT WHICH INCLUDES, BUT IS NOT LIMITED TO, THE FOLLOWING. THESE REQUIREMENTS APPLY TO THE ENTIRETY OF THE ARF AREA AS INDICATED. THESE REQUIREMENTS SUPERSEDE ALL OTHER DIRECTIONS NOTED ELSEWHERE WITHIN THE CONSTRUCTION DOCUMENT DRAWINGS AND SPECIFICATIONS.

1– CONDUIT: THERE SHALL BE NO EXPOSED CONDUIT IN THE ARF AREA, EXCEPT LFMC NEAR THE CEILING SERVING THE EXPOSED HOIST EQUIPMENT. CONDUIT CONCEALED IN WALLS OR ABOVE CEILING MAY BE ANY TYPE CONDUIT WHICH MEETS THE SPECIFICATIONS. CONDUIT ABOVE THE FINISHED CEILING MAY BE EMT WHERE THE CONDUIT DOES NOT PASS THROUGH OR ENTER INTO THE WALL, CEILING OR FLOOR OF THE ARF AREA.

2– BOXES: BOXES IN ARF AREA, INCLUDING BOXES INSTALLED FLUSH/RECESSED, SHALL BE CAST BOX ('FD' TYPE BOX) WITH EXTERNAL HUB. ALL BOXES SHALL BE MOUNTED FLUSH/RECESSED. THERE SHALL BE NO SURFACE MOUNT/EXPOSED BOXES IN THE ARF AREA. BOXES INSTALLED ENTIRELY ABOVE THE CEILING AND NOT PENETRATING THE CEILING MAY BE STANDARD INTERIOR GALVANIZED BOXES.

3– SEALING CONDUIT TERMINATIONS: AT EACH CONDUIT TERMINATION TO ANY BOX, ENCLOSURE, EQUIPMENT OR OTHER TERMINATION POINT OF THE CONDUIT WITHIN BOXES IN THE ARF AREA OR FLUSH/RECESSED IN THE ARF AREA THE CONDUIT HUB OR TERMINATION AT THE BOX/ENCLOSURE/EQUIPMENT SHALL BE SEALED WITH SEALANT AFTER INSTALLATION OF ALL WIRE AND CABLE. SEE THE DRAWINGS FOR DETAILS. IT IS THE RESPONSIBILITY OF THE ELECTRICAL CONTRACTOR TO SEAL CONDUIT TERMINATIONS FOR SECURITY, FIRE ALARM, TELEMETRY, TELECOM AND ALL OTHER WIRE/CABLE AND EMPTY CONDUIT TERMINATIONS AS WELL AS WIRE/CABLE THAT THE ELECTRICAL CONTRACTOR PROVIDES.

4– GASKETS: ALL DEVICES AND OUTLETS SHALL HAVE A NEOPRENE GASKET BETWEEN THE COVER AND THE FINISH WALL/CEILING. WHERE THE DEVICE HAS A BACKPLATE (SUCH AS FIRE ALARM DEVICE OR CEILING OCCUPANCY SENSOR) THERE SHALL ALSO BE A NEOPRENE GASKET INSTALLED BETWEEN THE BACKPLATE AND THE FINISH WALL/CEILING.

5– SEALANT: SEAL ALL ITEMS THAT CONTACT THE WALL OR CEILING SURFACE WITH APPROPRIATE SEALANT. SEE DRAWINGS FOR DETAILS. SEE ARCHITECTURAL DRAWINGS AND SPECIFICATIONS FOR SEALANT TYPE.

6– CONDUIT THREAD COMPOUND: PROVIDE CONDUIT THREAD COMPOUND ON ALL CONDUIT THREADS PER THE SPECIFICATIONS AT BOXES, FITTINGS AND OTHER THREADED TERMINATIONS.

7– ENCLOSURES AND HOUSINGS: ALL ENCLOSURES AND HOUSINGS WITHIN THE 'ARF' AREA WHICH ARE NOT ENVIRONMENTALLY SEALED, INCLUDING BUT NOT LIMITED TO PANELS AND RECESSED EMERGENCY LIGHT FIXTURES, SHALL HAVE ALL SEAMS AND OPENINGS SEALED WITH 100% SILICONE SEALANT AS SPECIFIED.

8– FASTENERS: FASTENERS, SCREWS, BOLTS, WASHERS AND ASSOCIATED APPURTENANCES WITHIN THE 'ARF' AREA SHALL BE STAINLESS STEEL. SCREWS FOR STANDARD (NOT WEATHERPROOF) STAINLESS STEEL COVERS WHICH HAVE A COUNTERSUNK OPENING SHALL BE COUNTERSUNK PHILLIPS HEAD SCREW. SCREWS FOR WEATHERPROOF COVERS THAT ARE NOT COUNTERSUNK SHALL BE PHILLIPS PAN HEAD MACHINE SCREW.

9– SHARP EDGES: THERE SHALL BE NO SHARP EDGES OF ANY ITEMS WITHIN THE 'ARF' AREA THAT CAN DAMAGE PPE. AVOID DAMAGE TO SCREW HEADS WHICH CAUSES SHARP EDGES.

10– THESE REQUIREMENTS APPLY TO ALL BOXES, CONDUIT AND OTHER EQUIPMENT INCLUDING ALL EQUIPMENT INSTALLED BY HVAC CONTRACTOR, CONTROLS CONTRACTOR, FIRE ALARM CONTRACTOR, SECURITY CONTRACTOR (SURVEILLANCE), LAB EQUIPMENT CONTRACTOR, OWNER AND OTHERS. IT IS THE RESPONSIBILITY OF THE ELECTRICAL CONTRACTOR TO COORDINATE WITH AND INFORM ALL CONTRACTORS OF THESE REQUIREMENTS. IT IS IMPERATIVE THAT THE ELECTRICAL CONTRACTOR COMMUNICATE ALL REQUIREMENTS WITH OTHERS.

EQUIPMENT PLATFORM KEY NOTES

1. LIGHT FIXTURES IN EQUIPMENT PLATFORM SHALL BE MOUNTED 8'–3" AFF TO BOTTOM OF FIXTURE UNLESS PIPING OR DUCTWORK INTERFERES WITH INSTALLATION OR IS BELOW LIGHT WHEREIN THEN THE LIGHT FIXTURE SHALL BE MOUNTED AS HIGH AS POSSIBLE AND MINIMUM 4" ABOVE THE BOTTOM OF ANY PIPING OR DUCT WITHIN 12" LATERALLY OF THE LIGHT FIXTURE. CONTRACTOR SHALL COORDINATE EXACT FINAL LOCATION OF MECHANICAL EQUIPMENT, PIPING AND DUCTWORK AND ARRANGE LIGHT FIXTURES TO ACCOMMODATE COMPLETE INSTALLATION AND TO MAINTAIN ACCESS TO LIGHT FIXTURES FOR MAINTENANCE.
2. THIS AREA IS THE WIDER SECTION OF THE EQUIPMENT PLATFORM. KEY NOTE 1 ALSO APPLIES TO THIS AREA.
3. COORDINATE WITH HVAC CONTROLS CONTRACTOR AND PROVIDE TELECOM OUTLETS AND PORTS (ETHERNET JACKS) REQUIRED FOR MECHANICAL CONTROL PANELS. THE MAXIMUM PORTS PER OUTLET SHALL BE THREE. PROVIDE ADDITIONAL OUTLETS (BOXES AND CONDUIT) WHERE MORE THAN THREE PORTS ARE REQUIRED.
4. COORDINATE WITH MECHANICAL AND PLUMBING CONTRACTORS AND DUCT, PIPING AND EQUIPMENT INSTALLED ON EQUIPMENT PLATFORM AND LOCATION PULL BOXES SUCH THEY CAN BE EASILY ACCESSED WITH ADEQUATE CLEARANCE IN FRONT FOR INSTALLING CABLES.

ELECTRICAL SYSTEMS FLOOR PLAN KEY NOTES

----THE FOLLOWING NOTES APPLY TO ALL ELECTRICAL SYSTEM BOXES INDICATED THROUGHOUT THE CONSTRUCTION DOCUMENTS INCLUDING ANY CONTROLS OR OTHER BOX SYSTEM INSTALLED BY OTHER CONTRACTORS. THE ELECTRICAL CONTRACTOR SHALL MAKE ALL OTHER TRADES AND INSTALLERS AWARE OF THIS REQUIREMENT.

1. ALL OUTLETS IN THIS ROOM SHALL HAVE JUMBO COVER PLATES TO AID IN COVERING THE EDGE OF THE RECESSED BOX GIVEN THAT THE BOXES ARE CAST BOXES AND CAST BOXES ARE LARGER THAN TYPICAL GALVANIZED BOXES.
2. IT IS CRITICAL THAT ALL OUTLET BOX CUTOUTS OF THE MASONRY IN THIS ROOM SHALL BE CUT AS NEAT AS POSSIBLE AND THAT ANY LARGE GAPS IN THE SPACE AROUND THE BOX BE NEATLY FILLED WITH NON–SHRINK GROUT IN A FINISH SURFACE MANNER AS THE BOXES ARE CAST BOXES WITH A CAST BOX WEATHERPROOF COVER. THIS INSTALLATION RESULTS IN THE COVER NOT ADEQUATELY COVERING THE GAP AROUND THE BOX. THE SAME IS TRUE OF THE CEILING SUCH THAT THE GYP BOARD SHALL BE NEATLY CUT AND THE SPACE AROUND THE BOX NEATLY FILLED WITH JOINT COMPOUND. BLANK COVERS AND TELECOM OUTLET COVERS SHALL BE OVERSIZED TO ADEQUATELY COVER THE GAP. COORDINATE WITH OWNER AND NCSU OIT COMTECH GROUP TO INSTALL OVERSIZED TELECOM COVERS.
3. THERE SHALL BE NO CONDUIT, RACEWAY, BOXES OR OTHER EQUIPMENT INSTALLED IN 'ACCESS–103' UNLESS DIRECTLY RELATED TO DEVICES/EQUIPMENT LOCATED IN THE SPACE.

3 / E205 FLOOR PLAN – ELECTRICAL SYSTEMS

SCALE: 1/8"=1'–0"

DRAWING NOTES

THE ELECTRICAL CONTRACTOR SHALL COORDINATE CLOSELY WITH MECHANICAL AND PLUMBING CONTRACTORS FOR THE ROUTING OF CONDUIT AND LOCATION OF ELECTRICAL EQUIPMENT IN THE MECHANICAL ROOM AND IN THE EQUIPMENT PLATFORM AREA SUCH THAT INSTALLED CONDUIT AND ELECTRICAL EQUIPMENT DOES NOT CONFLICT WITH OTHER PIPING OR EQUIPMENT AND DOES NOT IMPEDE SERVICE AND REMOVAL OF MECHANICAL OR PLUMBING EQUIPMENT. COORDINATE PARTICULARLY CLOSE FOR ROUTE FOR REMOVAL OF EQUIPMENT FROM THE EQUIPMENT PLATFORM INTO AND THROUGH THE MECHANICAL ROOM.

Wagner Architecture, pllc
92 ELAM COURT
NEW HILL, NORTH CAROLINA 27562
TEL. (919) 612.5050

Kramer Engineering Services, pllc
5517 Cascade Dr, Chapel Hill, NC 27514
TEL (919)933-3350
email: donna@kespllc.com
Firm license: P-1099

bennett&pless
formerly LHC STRUCTURAL ENGINEERS
5430 Wade Park Blvd, Suite 400
Raleigh, NC 27607
Tel 919 832 5587

Copyright 2022 • Bennett & Pless, Inc.
All Rights Reserved

B & P Job Number 22.08.048

NV5 ENGINEERS AND CONSULTANTS, INC.
3300 REGENCY PARKWAY, STE 100
CARY, NC 27518
P: 919.851.1912 www.NV5.com
NC License #F-1333
formerly CALYX Engineers + Consultants

NORTH CAROLINA PROFESSIONAL SEAL 14917 ENGINEER DONNA D. KRAMER 5/18/2023

PREPARED FOR
NORTH CAROLINA STATE UNIVERSITY
COLLEGE OF VETERINARY MEDICINE

TRUE NORTH
PLAN NORTH

TRANSLATIONAL RESEARCH FACILITY

revisions

building number

cadd file number

drawn by JEY

checked by DDK

date ISSUED FOR CONSTRUCTION 05/18/2023

project number
NCSU CODE: 42124
ITEM: 305
WA 202207
SCO#: 21–24030–01A

EQUIPMENT PLATFORM-LIGHTING, POWER/TELECOM, AND TELEMETRY, AND FIRE ALARM, FLOOR PLAN-ELECTRICAL SYSTEMS

sheet number: E205

revision number:

ELECTRICAL RISER NOTES

1. THE AMPERAGE SHOWN IN PANEL OR EQUIPMENT ICON IS FEEDER AMPERAGE TO EQUIPMENT, NOT PANEL BUS AMPERAGE. SEE PANEL SCHEDULE FOR BUS AMPERAGE FOR NEW EQUIPMENT.

2. INSULATION RESISTANCE TESTS (MEGGER TESTS) SHALL BE PERFORMED ON ALL FEEDERS ACCORDING TO THE SPECIFICATIONS. SOME TESTS SHALL BE PERFORMED BEFORE MAKING ANY TERMINATIONS AND SOME TESTS SHALL BE PERFORMED AFTER TERMINATIONS WITH THE FEEDER NEUTRAL DISCONNECTED AT THE PANEL. THE CONTRACTOR SHALL READ AND FOLLOW THIS TESTING ACCORDING TO THE SPECIFICATIONS.

3. FEEDERS AND WIRING SHALL BE TORQUED USING A TORQUE WRENCH PER THE SPECIFICATIONS. TIGHTENING LUGS, TERMINALS OR SCREWS FOR WIRE TERMINATION BY HAND ONLY IS STRICTLY PROHIBITED.

4. THE AMPERAGE SHOWN IN PANEL OR EQUIPMENT ICON IS FEEDER AMPERAGE TO EQUIPMENT, NOT PANEL BUS AMPERAGE. SEE PANEL SCHEDULE FOR BUS AMPERAGE FOR NEW EQUIPMENT.

5. PROVIDE A FRAMED POWER RISER SECURED TO WALL NEAR THE SERVICE ENTRANCE EQUIPMENT. THE FRAMED POWER RISER SHALL INDICATE SAME INFORMATION AS THE POWER RISER ON THE DRAWINGS. THE RISER SHALL ALSO INDICATE THE PHASE, GROUNDED CONDUCTOR AND EQUIPMENT GROUND NAME AND COLOR CODING OF ALL CONDUCTORS USED IN THE DISTRIBUTION SYSTEM FOR COMPLIANCE WITH NEC 210.5 (C) 1. RISER SHALL BE COVERED WITH A CLEAR ACRYLIC SHEET AND FRAMED IN WOOD. ALTERNATIVELY WHERE WALL SPACE DOES NOT ALLOW A FRAMED RISER, PROVIDE A RISER ENCAPSULATED IN A 5 MIL CLEAR PHOTO QUALITY LAMINATE. SHEET OR SHEETS SHALL HAVE A 1" GUTTER BORDER FOR MINIMUM THREE ATTACHMENT RINGS. HANG LAMINATED RISERS ON WALL NEAR EQUIPMENT.

6. HORIZONTAL FEEDER ROUTING – FEEDER HORIZONTAL RUNS SHALL BE ROUTED ABOVE THE FINISHED CEILING AND THROUGH MECHANICAL ROOMS, ELECTRICAL ROOMS AND OTHER SPACES OUTSIDE THE 'ANIMAL RESEARCH FACILITY' ('ARF') AREA. FEEDERS SHALL NOT BE ROUTED ABOVE THE CEILING OF THE 'ARF' AREA UNLESS FEEDING EQUIPMENT WITHIN THE 'ARF' AREA. SEE E205 FOR 'ARF' AREA.

7. WHERE EXISTING EQUIPMENT TO REMAIN IS REFED OR WORK IS PERFORMED WITHIN THIS EXISTING EQUIPMENT, THE CONTRACTOR SHALL TIGHTEN AND TORQUE ALL EXISTING TERMINALS WITHIN EQUIPMENT WHICH IS OPENED OR WHERE WORK IS PERFORMED. OBTAIN TORQUE REQUIREMENTS FROM THE EQUIPMENT ORIGINAL MANUFACTURER OR FROM NEC INFORMATIVE ANNEX I IN THE ABSENCE OF MANUFACTURER'S VALUES.

8. THREADED CONDUIT CONNECTIONS SHALL HAVE A CONDUIT THREAD COMPOUND APPLIED PER THE SPECIFICATIONS.

9. CONDUCTOR TERMINATIONS IN PANELS OR OTHER EQUIPMENT OUTSIDE, AND ALL EXPOSED WIRE TERMINALS IN ANIMAL HOLDING ROOMS (GROUNDING OUTLETS) SHALL HAVE AN APPLICATION OF ELECTRICALLY CONDUCTIVE TERMINAL COMPOUND APPLIED PER THE SPECIFICATIONS.

10. CONDUIT BELOW GRADE, INCLUDING CONDUIT IN DUCT BANK AND EXISTING CONDUIT WHICH IS REUSED, SHALL BE CLEANED AND SWABBED PER THE SPECIFICATIONS.

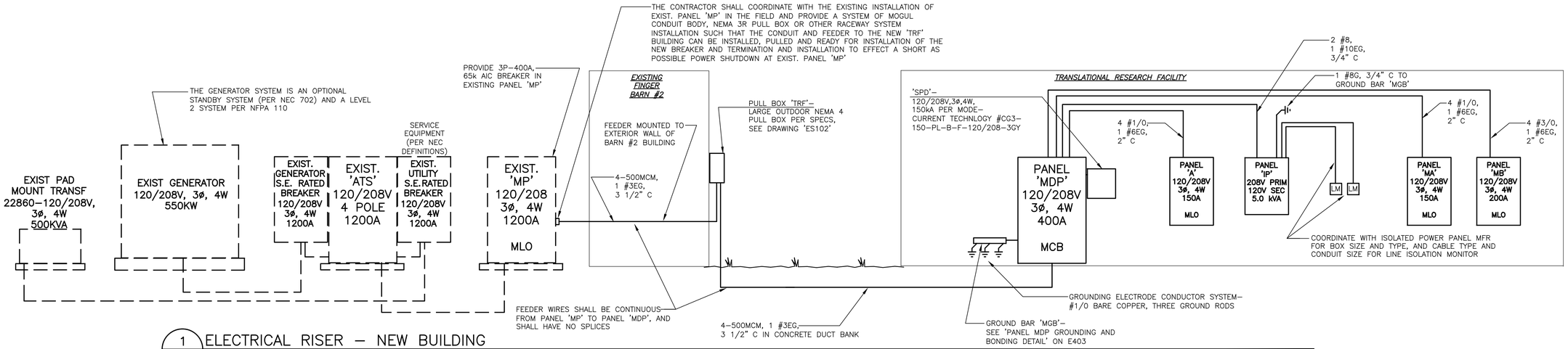

1 / E301 ELECTRICAL RISER – NEW BUILDING
NOT TO SCALE

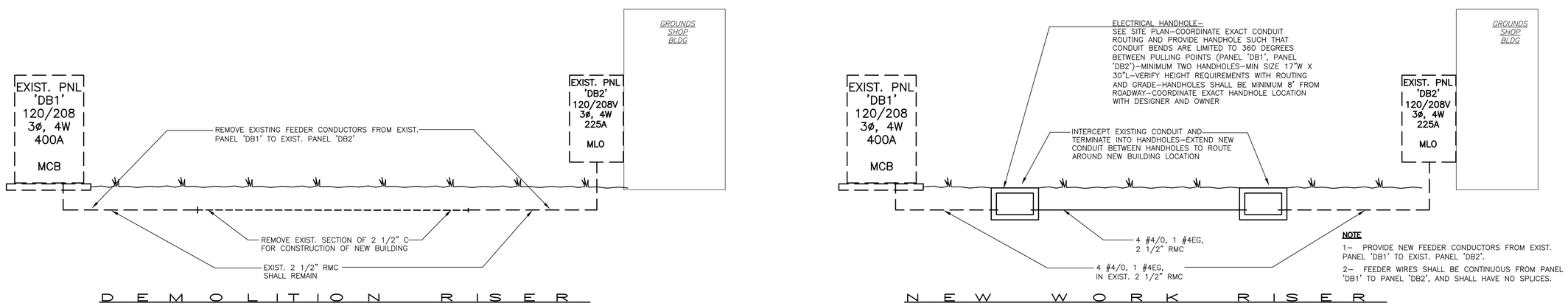

NOTE
1– PROVIDE NEW FEEDER CONDUCTORS FROM EXIST. PANEL 'DB1' TO EXIST. PANEL 'DB2'.
2– FEEDER WIRES SHALL BE CONTINUOUS FROM PANEL 'DB1' TO PANEL 'DB2', AND SHALL HAVE NO SPLICES.

2 / E301 ELECTRICAL RISER – GROUNDS SHOP
NOT TO SCALE

Wagner Architecture, pllc
92 ELAM COURT
NEW HILL, NORTH CAROLINA 27562
TEL. (919) 612.5050

Kramer Engineering Services, pllc
5517 Cascade Dr, Chapel Hill, NC 27514
TEL (919)933-3350
email: donna@kespllc.com
Firm license: P-1099

bennett&pless
formerly LHC STRUCTURAL ENGINEERS
5430 Wade Park Blvd, Suite 400
Raleigh, NC 27607
Tel 919 832 5587

Copyright 2022 • Bennett & Pless, Inc.
All Rights Reserved

B & P Job Number 22.08.048

NV5
NV5 ENGINEERS AND CONSULTANTS, INC.
3300 REGENCY PARKWAY, STE 100
CARY, NC 27518
P: 919.851.1912 www.NV5.com
NC License #F-1333
formerly CALYX Engineers + Consultants

NORTH CAROLINA PROFESSIONAL ENGINEER SEAL 14917 5/18/2023 DONNA D. KRAMER

PREPARED FOR
NORTH CAROLINA STATE UNIVERSITY
COLLEGE OF VETERINARY MEDICINE

TRUE NORTH
PLAN NORTH

TRANSLATIONAL RESEARCH FACILITY

revisions

building number

cadd file number

drawn by JEY

checked by DDK

date ISSUED FOR CONSTRUCTION 05/18/2023

project number
NCSU CODE: 42124
ITEM: 305
WA 202207
SCO#: 21–24030–01A

RISERS

sheet number: E301

revision number:

FIRE ALARM RISER NOTES

1. ALL CONDUIT SHALL BE MINIMUM 3/4". WHERE FLEXIBLE CONDUIT IS NEEDED DUE TO CONNECTION TO VIBRATING EQUIPMENT THE CONDUIT SHALL BE LIQUIDTIGHT FLEXIBLE METAL CONDUIT.

2. SEE PLANS FOR QUANTITY AND LOCATION OF DEVICES AND EQUIPMENT.

3. CIRCUITRY SHALL BE CONDUCTOR SIZE, QUANTITY, AND TYPE AS RECOMMENDED BY PARTICULAR MANUFACTURER FOR SPECIFIC USE AS INITIATION, NOTIFICATION, RELAY, OR SIGNALING LINE CIRCUIT CONDUCTORS. WIRE AWG SIZE SHALL BE AS RECOMMENDED BY MANUFACTURER FOR GIVEN LENGTH AND LOAD. WIRING SHALL BE INSTALLED ACCORDING TO THE PARTICULAR MANUFACTURER'S RECOMMENDATIONS. CABLE SHIELD WHERE INSTALLED SHALL BE CONNECTED AT SINGLE POINT AS DIRECTED BY MANUFACTURER AND ONLY AT THAT POINT, SHALL BE CONTINUOUS THROUGHOUT THE CIRCUIT, AND SHALL BE INSULATED FROM GROUND.

4. CIRCUITRY SHALL BE AS FOLLOWS AS A MINIMUM:

INITIATING CIRCUIT	#14, SHIELDED TWISTED PAIR
VISUAL NOTIFICATION CIRCUIT	#14, PAIR
AUDIBLE HORN NOTIFICATION CIRCUIT	#14, SHIELDED TWISTED PAIR
AUDIBLE SPEAKER NOTIFICATION CIRCUIT	
HORIZONTAL//FLOOR CIRCUIT	#18, SHIELDED TWISTED PAIR
RISER/BUILDING CIRCUIT	#16, SHIELDED TWISTED PAIR
RELAY SIGNAL CIRCUIT	#14, PAIR
DETECTOR POWER CIRCUIT	#14, UNSHIELDED TWISTED PAIR

5. NOTIFICATION APPLIANCE CIRCUITRY SHALL BE SIZED FOR THE QUANTITY OF DEVICES, LENGTH OF CIRCUIT AND VOLTAGE DROP FOR THE PARTICULAR INSTALLATION. SIZING SHALL BE BASED ON END OF BATTERY VOLTAGE IN ORDER TO MAINTAIN PROPER VOLTAGE TO OPERATE NOTIFICATION DEVICES DURING POWER OUTAGE AFTER TIME INDICATED IN WHICH THE SYSTEM IS TO REMAIN OPERATIVE.

6. PROVIDE MINIMUM ONE ADDRESSABLE LOOP SIGNALING LINE CIRCUIT PER FLOOR/LEVEL. THE ADDRESSABLE LOOP SIGNALING LINE CIRCUIT SHALL BE CLASS 'A' AND SHALL HAVE MINIMUM 20% SPARE CAPACITY FOR FUTURE ADDRESS POINTS.

7. THE SIGNALING LINE CIRCUIT PHYSICAL ROUTING SHALL BE SUCH THAT THE CONDUIT EXTENDS OUT FROM THE VICINITY OF THE FIRE ALARM CONTROL PANEL AND RETURNS TO THE FIRE ALARM CONTROL PANEL ALONG A DIFFERENT PATH/LOCATION WITHIN THE BUILDING SUCH THAT A CATASTROPHIC FAILURE OF ONE SECTION OF CIRCUITRY WILL NOT IMPAIR THE OPERATION OF THE ENTIRE LOOP CIRCUITRY. A MINIMUM OF ONE ISOLATION MODULE SHALL BE INSTALLED ON EACH FLOOR. WHERE ISOLATION MODULES ARE INSTALLED THEY SHALL BE INSTALLED SUCH THAT THE SIGNALING LINE CIRCUIT IS DIVIDED INTO APPROXIMATE EQUAL QUANTITIES OF ADDRESS POINTS BETWEEN ISOLATION MODULES ON THAT FLOOR AND IN THE FIRE ALARM CONTROL PANEL.

8. NOTIFICATION APPLIANCE CIRCUITRY SHALL CLASS 'B', STYLE 'Y'. PROVIDE A MINIMUM OF TWO NOTIFICATION APPLIANCE CIRCUITS. NOTIFICATION APPLIANCE CIRCUITS SHALL EXTEND OUT FROM THE FIRE ALARM CONTROL PANEL IN TWO DIRECTIONS; ONE SHALL EXTEND OUT WITH THE OUTGOING SIGNALING LINE CIRCUIT AND ONE SHALL EXTEND OUT WITH THE INCOMING SIGNALING LINE CIRCUIT. THIS ROUTING AND CIRCUITRY SHALL BE SUCH THAT A CATASTROPHIC FAILURE OF ONE SECTION OF CIRCUITRY WILL NOT IMPAIR THE OPERATION OF ALL DEVICES. WHERE TWO CIRCUITS SERVE A FLOOR APPROXIMATELY HALF OF THE DEVICES SHALL BE SERVED BY EACH CIRCUIT.

9. AUDIBLE NOTIFICATION APPLIANCE CIRCUITS AND VISIBLE NOTIFICATION APPLIANCE CIRCUITS SHALL BE LOADED TO MAXIMUM 75% CIRCUIT CAPACITY.

10. AUDIBLE AND VISIBLE NOTIFICATION CIRCUITS SHALL BE SEPARATE CIRCUITS CAPABLE OF OPERATING INDEPENDENT OF EACH OTHER SUCH THAT AUDIBLE ALARM MAY BE MUTED WHILE MAINTAINING VISIBLE ALARM.

11. VISIBLE NOTIFICATION APPLIANCES SHALL BE SYNCHRONIZED IN CORRIDORS AND OTHER AREAS WHERE THE LIGHT FROM MULTIPLE APPLIANCES IS VISIBLE AND/OR APPLIANCES ARE LOCATED WITHIN 50' OF EACH OTHER.

12. SMOKE AND HEAT DETECTORS SHALL BE LOCATED A MINIMUM OF 36" FROM HVAC SUPPLY, RETURN AND EXHAUST AIR DIFFUSERS, GRILLES AND OUTLETS. COORDINATE EXACT LOCATIONS WITH THE MECHANICAL CONTRACTOR AND FIELD CONDITIONS.

13. LABEL ALL DUCT MOUNT SMOKE DETECTOR REMOTE ALARM INDICATING LIGHTS. LABEL SHALL INCLUDE THE ASSIGNED SMOKE DETECTOR ADDRESS, THE ROOM NUMBER IN WHICH THE DUCT MOUNT SMOKE DETECTOR IS LOCATED AND VICINITY IN ROOM.

14. PROVIDE FIRE ALARM FLOOR PLAN MAPS BASED ON SYSTEM, ROOM NUMBERS, AND LAYOUT. PROVIDE FIRE ALARM FLOOR PLAN MAPS TO OWNER (PROJECT MANAGER AND NCSU ENVIRONMENTAL HEALTH & SAFETY) PRIOR TO TESTING AND ACCEPTANCE FOR REVIEW.

15. PROVIDE REQUIRED NFPA 72 FORMS INCLUDING BUT NOT LIMITED TO A 'RECORD OF COMPLETION' FORM AND 'INSPECTION AND TESTING FORM'.

16. THE TECHNICIANS WHO MAKE ANY CONNECTIONS TO (OR PERFORM ANY PROGRAMMING FOR) THE FIRE ALARM SYSTEM SHALL BE TRAINED AND INDIVIDUALLY CERTIFIED BY THE MANUFACTURER, FOR THE FIRE ALARM CONTROL PANEL MODEL/SERIES BEING INSTALLED. THIS TRAINING AND CERTIFICATION MUST HAVE OCCURRED WITHIN THE MOST RECENT 24 MONTHS.

17. AT THE CONCLUSION OF THE PROJECT, THE FIRE ALARM SYSTEM SHALL BE TESTED IN ACCORDANCE WITH NFPA 72.

18. THE FIRE ALARM INSTALLATION SHALL COMPLY WITH THE NORTH CAROLINA STATE UNIVERSITY CONSTRUCTION GUIDELINES FOR FIRE ALARM SYSTEMS. SEE CONSTRUCTION GUIDELINES AT THE WEBSITE:

HTTPS://FACILITIES.OFA.NCSU.EDU/FILES/2015/02/DIVISION26_FIRE_ALARM_SYSTEMS.PDF

SYSTEM OUTPUTS / SYSTEM INPUTS

		FACP ANNUNCIATION											NOTIFICATION											REQUIRED FIRE SAFETY CONTROL											SUPPLEMENTARY	
		A	B	C	D	E	F	G	H	I	J	K	L	M	N	O	P	Q	R	S	T	U	V	W	X	Y	Z	AA	BB	CC	DD	EE	FF	GG
		ACTUATE COMMON ALARM SIGNAL INDICATOR	ACTUATE AUDIBLE ALARM SIGNAL	ACTUATE COMMON SUPERVISORY SIGNAL INDICATOR	ACTUATE AUDIBLE SUPERVISORY SIGNAL	ACTUATE COMMON TROUBLE SIGNAL INDICATOR	ACTUATE AUDIBLE COMMON TROUBLE SIGNAL	ACTUATE 1ST FL ALARM INDICATOR	ACTUATE 2ND FL ALARM INDICATOR	ACTUATE 3RD FL ALARM INDICATOR	ACTUATE 1ST FL EVACUATION SIGNALS	ACTUATE 2ND FL EVACUATION SIGNALS	ACTUATE 3RD FL EVACUATION SIGNALS	ACTUATE 1ST FL ALARM INDICATOR	ACTUATE 2ND FL ALARM INDICATOR	ACTUATE 3RD FL ALARM INDICATOR	DISPLAY/PRINT CHANGE OF STATUS	TRANSMIT FIRE ALARM SIGNAL TO SUPERVISING STATION	TRANSMIT SUPERVISORY SIGNAL TO SUPERVISING STATION	TRANSMIT TROUBLE SIGNAL TO SUPERVISING STATION	RELEASE MAGNETICALLY HELD DOORS	RECALL ELEVATORS TO PRIMARY RECALL FLOOR	CLOSE SMOKE/FIRE DAMPERS IN RATED WALLS	ACTUATE 1ST FL ALTERNATE RECALL FLOOR	ACTUATE AHU SHUTDOWN	UNLOCK EXITS	ACTUATE EXHAUST FAN SHUTDOWN	INITIATE SUPPRESSION SYSTEM PREDISCHARGE ALARMS	ENERGIZE RELEASING SOLENOIDS	ACTUATE GRAPHICS SYSTEM — DISPLAY FLOOR MAP	PRESSURIZE STAIRWELLS	SHUTDOWN PROCESS #1	SHUTDOWN PROCESS #2	SHUTDOWN PROCESS #3	ACTUATE EXTERIOR STROBE AT F.D. RESPONSE POINT	
1	MANUAL FIRE ALARM PULL BOXES	●	●				●				●			●	●								●	●											
2	SMOKE DETECTORS	●	●				●				●			●	●								●	●											
3	HEAT DETECTORS	●	●				●				●			●	●								●	●											
4	FIRE ALARM AC POWER FAILURE					●	●							●			●																			
5	FIRE ALARM SYSTEM LOW BATTERY					●	●							●			●																			
6	OPEN CIRCUIT					●	●							●			●																			
7	GROUND FAULT					●	●							●			●																			
8	NOTIFICAITON APPLIANCE CIRCUIT OPEN/SHORT					●	●							●			●																			
9	AHU SHUTDOWN OR OVERRIDE SWITCH			●	●	●	●							●			●																			
10	EXHAUST FAN SHUTDOWN OR OVERRIDE SWITCH			●	●	●	●							●			●																			
11																																				
12																																				
13																																				
14																																				
15																																				
16																																				
17																																				
18																																				
19																																				

F I R E A L A R M M A T R I X

FIRE ALARM MATRIX NOTE

THE ELECTRICAL CONTRACTOR AND FIRE ALARM PROGRAMMER SHALL COORDINATE WITH THE OWNER AND THE LOCAL INSPECTOR, AND VERIFY FIRE ALARM MATRIX INPUT/OUTPUT AND OPERATION PRIOR TO FINAL PROGRAMMING, INCLUDING SPECIFICALLY THE AIR HANDLING UNIT AND EXHAUST FAN OPERATION.

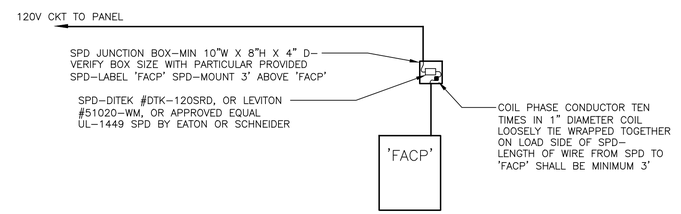

F I R E A L A R M C O N T R O L P A N E L
1 2 0 V P O W E R C I R C U I T R Y

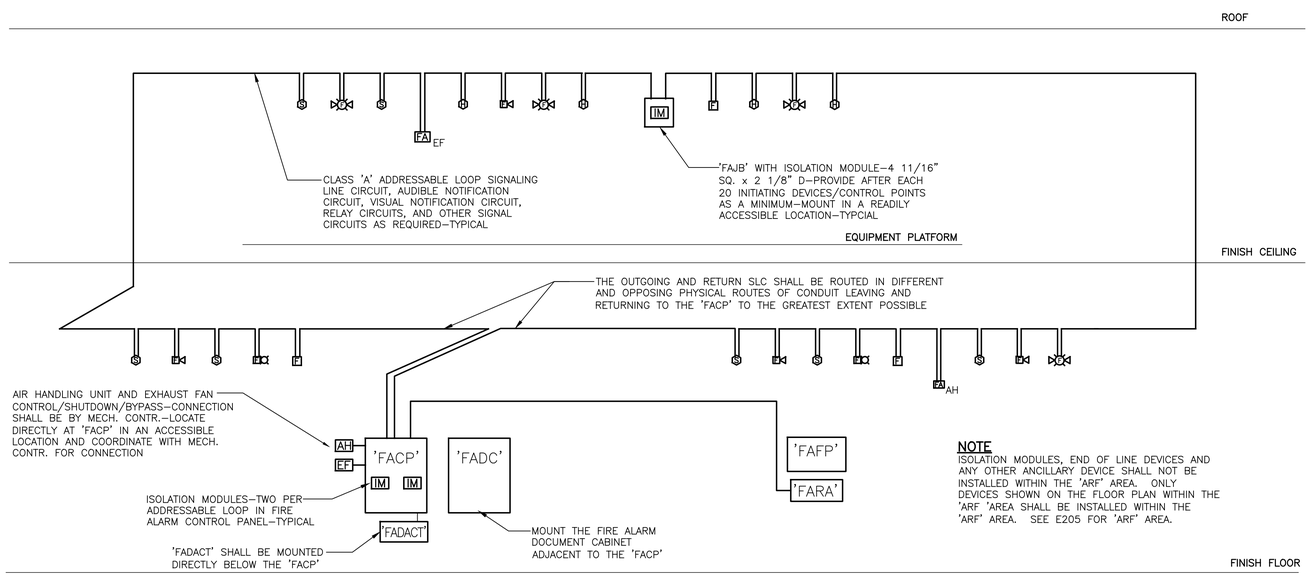

NOTE
ISOLATION MODULES, END OF LINE DEVICES AND ANY OTHER ANCILLARY DEVICE SHALL NOT BE INSTALLED WITHIN THE 'ARF' AREA. ONLY DEVICES SHOWN ON THE FLOOR PLAN WITHIN THE 'ARF' AREA SHALL BE INSTALLED WITHIN THE 'ARF' AREA. SEE E205 FOR 'ARF' AREA.

1 FIRE ALARM RISER
E302 NOT TO SCALE

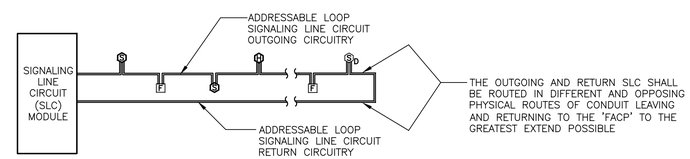

A D D R E S S A B L E L O O P S I G N A L I N G L I N E C I R C U I T
W I R I N G S C H E M A T I C – C L A S S 'A', S T Y L E 'D'

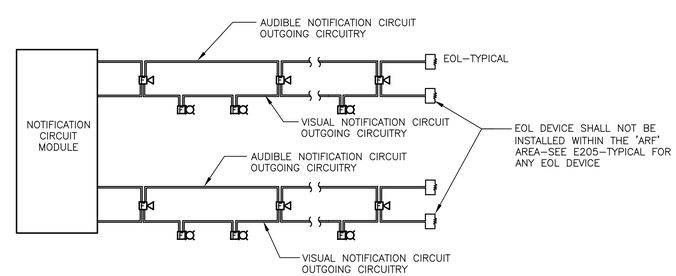

N O T I F I C A T I O N C I R C U I T W I R I N G
S C H E M A T I C – C L A S S 'B', S T Y L E 'Y'

Wagner Architecture, pllc
92 ELAM COURT
NEW HILL, NORTH CAROLINA 27562
TEL. (919) 612.5050

Kramer Engineering Services, pllc
5517 Cascade Dr, Chapel Hill, NC 27514
TEL (919)933-3350
email: donna@kesplic.com
Firm license: P-1099

bennett&pless
formerly LHC STRUCTURAL ENGINEERS
5430 Wade Park Blvd, Suite 400
Raleigh, NC 27607
Tel 919 832 5587

Copyright 2022 • Bennett & Pless, Inc.
All Rights Reserved

B & P Job Number 22.08.048

NV5 ENGINEERS AND CONSULTANTS, INC.
3300 REGENCY PARKWAY, STE 100
CARY, NC 27518
P: 919.851.1912 www.NV5.com
NC License #F-1333
formerly OLIVI Engineers • Consultants

NORTH CAROLINA PROFESSIONAL SEAL 14917 ENGINEER DONNA D. KRAMER 5/18/2023

PREPARED FOR
NORTH CAROLINA STATE UNIVERSITY
COLLEGE OF VETERINARY MEDICINE

TRUE NORTH
PLAN NORTH

TRANSLATIONAL RESEARCH FACILITY

revisions

building number
cadd file number
drawn by JEY
checked by DDK
date ISSUED FOR CONSTRUCTION 05/18/2023
project number
NCSU CODE: 42124
ITEM: 305
WA 202207
SCO#: 21–24030–01A

RISERS

sheet number: E302
revision number:

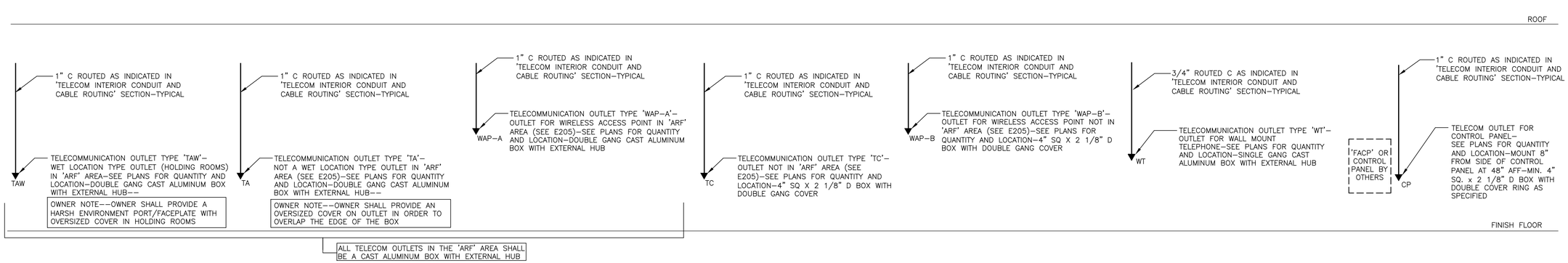

T E L E C O M O U T L E T A N D C O N D U I T S I Z I N G

TELECOMMUNICATION RISER NOTES

1– MINIMUM CONDUIT SIZE SHALL BE 1", EXCEPT CONDUIT SERVING WALL TELEPHONE OUTLETS MAY BE 3/4".

2– THE CONTRACTOR SHALL INSTALL A POLYESTER MEASURING PULL TAPE IN ALL TELECOM CONDUIT. PULL TAPE SHALL BE MINIMUM 200 POUND TEST STRENGTH AND BE MARKED IN LENGTH AT EACH FOOT. THE CONTRACTOR SHALL LEAVE MINIMUM 24" SPARE LENGTH PULL STRING AT EACH TELECOM CONDUIT TERMINATION. PROVIDE A LABEL ON EACH END OF THE INSTALLED PULL STRING WITH A DISTINCTIVE NUMERIC LABEL WHICH INCLUDES THE ROOM NUMBER OF THE OUTLET LOCATION.

3– CONTINUOUS CONDUIT RUNS SHALL HAVE A MAXIMUM OF 180 DEGREES OF BENDS IN EACH RUN. WHERE CONDUIT ROUTING HAS MORE THAN TWO 90 DEGREE BENDS, PROVIDE A PULL BOX AFTER EACH TWO BENDS. INSTALL PULL BOXES IN STRAIGHT SECTION OF CONDUIT RUNS WHERE FEASIBLE. PULL BOXES SHALL BE 4 11/6" SQ. X 2 1/8" D. WHERE PULL BOXES ARE INSTALLED AT CONDUIT CHANGE OF DIRECTION THE CONDUIT SHALL BE CONNECTED TO THE BOX WITH MAXIMUM DISTANCE SO AS TO OFFER THE GREATEST CABLE BEND RADIUS WITHIN THE BOX. WHERE CONDUIT ROUTING EXCEEDS 75' IN LENGTH, PROVIDE A PULL BOX SUCH THAT EACH RUN BETWEEN PULL BOXES IS OF EQUAL LENGTH AND LESS THAN 75'. CONDUIT BODIES ('LB' OR SIMILAR TYPE) ARE NOT ALLOWED TO MEET THESE REQUIREMENTS. NOTE PULL BOX LOCATIONS AND THE OUTLETS THEY SERVE ON AS–BUILT DRAWINGS. THE CONTRACTOR SHALL PROVIDE A SYSTEM OF CONDUIT WITH NECESSARY PULL BOXES AND LONG SWEEP BENDS SUCH THAT THE PULLING TENSION ON ANY CABLE DOES NOT EXCEED 25 POUNDS OF PULLING FORCE.

4– ALL CONDUIT SHALL HAVE PLASTIC INSULATED BUSHINGS.

5– SEE PLANS FOR EXACT QUANTITY, LOCATION AND TYPE OF DEVICES.

6– ROUTE CONDUIT IN SUCH A MANNER AS TO MAINTAIN MINIMUM 6" CLEARANCE BETWEEN TELECOMMUNICATION CONDUIT ROUTING PATHWAY AND ANY OTHER SYSTEM CIRCUITRY (I.E.–FIRE ALARM, LIGHTING/POWER, SIGNAL SYSTEMS, ETC) OR LIGHT FIXTURES.

7– OUTLETS FOR WIRELESS ACCESS POINTS (WAP) SHALL BE MOUNTED SUCH THAT INSTALLATION OF THE EQUIPMENT UPON THE OUTLET DOES NOT CONFLICT WITH OTHER CONSTRUCTION (DOOR FRAMES, CEILING, CABINETS, FURNITURE, ETC.). 'WAP' OUTLETS SHALL BE SPACED MINIMUM 8" FROM EDGE OF OUTLET FROM OTHER CONSTRUCTION ITEMS.

8– THE SYSTEM SHALL BE INSTALLED IN FULL COMPLIANCE WITH BICSI (BUILDING INDUSTRY CONSULTING SERVICES INTERNATIONAL) TELECOMMUNICATION GUIDELINES.

TELECOMMUNICATION CABLE, TERMINATION AND EQUIPMENT INSTALLATION NOTES

1– ALL VOICE/DATA TELECOM CABLE SHALL BE FURNISHED AND INSTALLED BY THE OWNER.

2– THE OWNER SHALL TERMINATE, TEST AND PROVIDE FINAL PARTICULAR LABELING FOR ALL CABLES.

3– ALL OUTLET JACKS AND FACEPLATES, WIRELESS ACCESS POINT ANTENNAS, TELECOMMUNICATION RACKS AND ASSOCIATED WIRE MANAGEMENT ITEMS, PATCH PANELS, VOICE PUNCH DOWN BLOCKS, AND ASSOCIATED APPURTENANCES SHALL BE FURNISHED AND INSTALLED BY THE OWNER. THE CONTRACTOR SHALL COORDINATE WITH THE OWNER FOR CABLE INSTALLATION AND FINAL INSTALLATION OF ALL EQUIPMENT.

4– THE OWNER SHALL FURNISH A TELECOM WALL MOUNT CABINET TO THE CONTRACTOR. THE CONTRACTOR SHALL INSTALL THE TELECOM WALL MOUNT CABINET.

5– THE CONTRACTOR SHALL COORDINATE CLOSELY WITH THE OWNER FOR OBTAINING THE TELECOM CABINET, AND SCHEDULING A TIME FOR CABLE AND EQUIPMENT INSTALLATION AND FOR COMPLETION OF THE TELECOM SYSTEM.

6– THE OWNER CONTACTS FOR COORDINATION OF TELECOM WORK SHALL BE THE OWNER'S PROJECT MANAGER AND THE NCSU COMTECH GROUP PROJECT MANAGER.

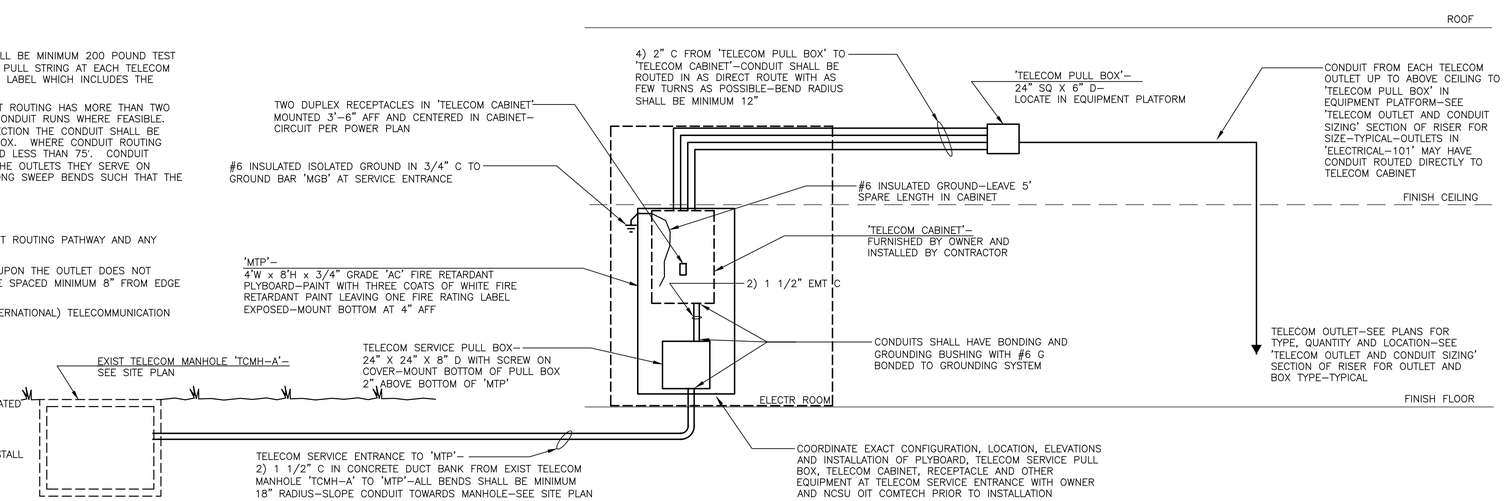

T E L E C O M M U N I C A T I O N S E R V I C E E N T R A N C E

T E L E C O M I N T E R I O R C O N D U I T A N D C A B L E R O U T I N G

1 E303 TELECOM RISER
NOT TO SCALE

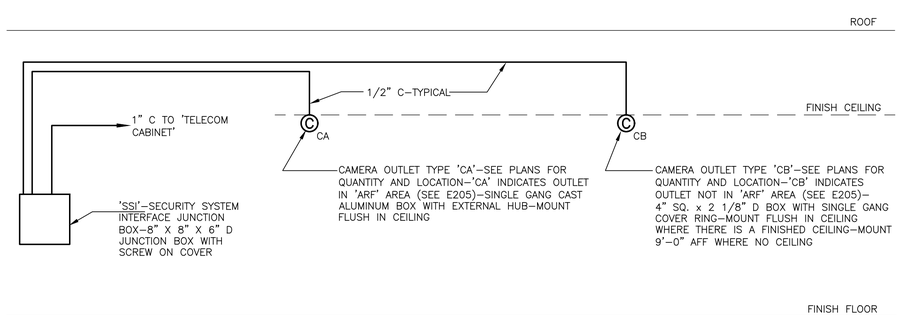

S U R V E I L L A N C E S Y S T E M R I S E R

SECURITY RISER NOTES – SURVEILLANCE

1– THE CONTRACTOR SHALL INSTALL A POLYESTER MEASURING PULL TAPE IN ALL CONDUIT. PULL TAPE SHALL BE MINIMUM 200 POUND TEST STRENGTH AND BE MARKED IN LENGTH AT EACH FOOT. THE CONTRACTOR SHALL LEAVE MINIMUM 24" SPARE LENGTH PULL STRING AT EACH CONDUIT TERMINATION. PROVIDE A LABEL ON EACH END OF THE INSTALLED PULL STRING WITH A DISTINCTIVE NUMERIC LABEL WHICH INCLUDES THE ROOM NUMBER OF THE OUTLET LOCATION.

2– CONTINUOUS CONDUIT RUNS SHALL HAVE A MAXIMUM OF 180 DEGREES OF BENDS IN EACH RUN. WHERE CONDUIT ROUTING HAS MORE THAN 180 DEGREES BEND OR TWO 90 DEGREE BENDS, PROVIDE A PULL BOX. INSTALL PULL BOXES IN STRAIGHT SECTION OF CONDUIT RUNS WHERE FEASIBLE. PULL BOXES SHALL BE 4 11/6" SQ. X 2 1/8" D. WHERE PULL BOXES ARE INSTALLED AT CONDUIT CHANGE OF DIRECTION THE CONDUIT SHALL BE CONNECTED TO THE BOX WITH MAXIMUM DISTANCE SO AS TO OFFER THE GREATEST CABLE BEND RADIUS WITHIN THE BOX. WHERE CONDUIT ROUTING EXCEEDS 75' IN LENGTH, PROVIDE A PULL BOX SUCH THAT EACH RUN BETWEEN PULL BOXES IS OF EQUAL LENGTH AND LESS THAN 75'. CONDUIT BODIES ('LB' OR SIMILAR TYPE) ARE NOT ALLOWED TO MEET THESE REQUIREMENTS. NOTE PULL BOX LOCATIONS AND THE OUTLETS THEY SERVE ON AS–BUILT DRAWINGS. THE CONTRACTOR SHALL PROVIDE A SYSTEM OF CONDUIT WITH NECESSARY PULL BOXES AND LONG SWEEP BENDS SUCH THAT THE PULLING TENSION ON ANY CABLE DOES NOT EXCEED 25 POUNDS OF PULLING FORCE.

3– ALL CONDUIT SHALL HAVE PLASTIC INSULATED BUSHINGS.

4– SEE PLANS FOR EXACT QUANTITY, LOCATION AND TYPE OF DEVICES.

5– ROUTE CONDUIT IN SUCH A MANNER AS TO MAINTAIN MINIMUM 6" CLEARANCE BETWEEN TELECOMMUNICATION CONDUIT ROUTING PATHWAY AND ANY OTHER SYSTEM CIRCUITRY (I.E.–FIRE ALARM, LIGHTING/POWER, SIGNAL SYSTEMS, ETC) OR LIGHT FIXTURES.

6– THE SYSTEM SHALL BE INSTALLED IN FULL COMPLIANCE WITH BICSI (BUILDING INDUSTRY CONSULTING SERVICES INTERNATIONAL) TELECOMMUNICATION GUIDELINES.

7– ALL SECURITY SYSTEM CABLE, CAMERAS, AND OTHER SECURITY SYSTEM COMPONENTS AND EQUIPMENT SHALL BE FURNISHED AND INSTALLED BY THE OWNER.

9– THE OWNER CONTACTS FOR COORDINATION OF SECURITY SYSTEM WORK SHALL BE THE OWNER'S PROJECT MANAGER AND THE NCSU SECURITY SYSTEM GROUP PROJECT MANAGER.

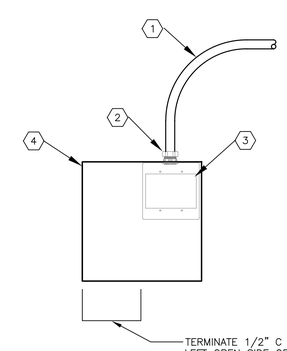

KEY NOTES

1. 1" EMT CONDUIT TO 'TELECOM CABINET'.
2. 1" EMT COMPRESSION TYPE CONNECTOR. ATTACH IN CENTER OF WIREMOLD BOX AS SHOWN.
3. TWO–GANG, EXTRA DEEP SURFACE MOUNTED OUTLET BOX, WIREMOLD V–2444–2 OR APPROVED EQUAL BY HUBBELL OR T&B. PROVIDE PULLSTRING FROM OUTLET TO 'TELECOM CABINET'. SECURE AT BOTH ENDS.
4. 8" X 8" X 6" JUNCTION BOX WITH SCREW COVER.

'SSI'– SECURITY SYSTEM INTERFACE JUNCTION BOX

2 E303 SECURITY RISER – SURVEILLANCE
SCALE: NOT TO SCALE

Wagner Architecture, pllc
92 ELAM COURT
NEW HILL, NORTH CAROLINA 27562
TEL. (919) 612.5050

Kramer Engineering Services, pllc
5517 Cascade Dr, Chapel Hill, NC 27514
TEL (919)933-3350
email: donna@kespllc.com
Firm license: P-1099

bennett&pless
formerly LHC STRUCTURAL ENGINEERS
5430 Wade Park Blvd, Suite 400
Raleigh, NC 27607
Tel 919 832 5587

Copyright 2022 • Bennett & Pless, Inc.
All Rights Reserved

B & P Job Number 22.08.048

NV5
NV5 ENGINEERS AND CONSULTANTS, INC.
3300 REGENCY PARKWAY, STE 100
CARY, NC 27518
P: 919.851.1912 www.NV5.com
NC License #F-1333
formerly CALYX Engineers + Consultants

NORTH CAROLINA PROFESSIONAL ENGINEER SEAL 14917 5/18/2023 DONNA D. KRAMER

PREPARED FOR
NORTH CAROLINA STATE UNIVERSITY
COLLEGE OF VETERINARY MEDICINE

TRUE NORTH
PLAN NORTH

TRANSLATIONAL RESEARCH FACILITY

revisions

building number

cadd file number

drawn by JEY

checked by DDK

date ISSUED FOR CONSTRUCTION 05/18/2023

project number NCSU CODE: 42124
ITEM: 305
WA 202207
SCO#: 21–24030–01A

RISERS

sheet number E303

revision number

TELEMETRY RISER NOTES

1– MINIMUM CONDUIT SIZE SHALL BE 3/4".

2– THE CONTRACTOR SHALL INSTALL A POLYESTER MEASURING PULL TAPE IN ALL CONDUIT. PULL TAPE SHALL BE MINIMUM 200 POUND TEST STRENGTH AND BE MARKED IN LENGTH AT EACH FOOT. THE CONTRACTOR SHALL LEAVE MINIMUM 24" SPARE LENGTH PULL STRING AT EACH CONDUIT TERMINATION. PROVIDE A LABEL ON EACH END OF THE INSTALLED PULL STRING WITH A DISTINCTIVE NUMERIC LABEL WHICH INCLUDES THE ROOM NUMBER OF THE OUTLET LOCATION.

3– CONTINUOUS CONDUIT RUNS SHALL HAVE A MAXIMUM OF 180 DEGREES OF BENDS IN EACH RUN. WHERE CONDUIT ROUTING HAS MORE THAN 180 DEGREES IN BENDS OR TWO 90 DEGREE BENDS PROVIDE A PULL BOX. INSTALL PULL BOXES IN STRAIGHT SECTION OF CONDUIT RUNS WHERE FEASIBLE. PULL BOXES SHALL BE 4 11/6" SQ. X 2 1/8" D. WHERE PULL BOXES ARE INSTALLED AT CONDUIT CHANGE OF DIRECTION THE CONDUIT SHALL BE CONNECTED TO THE BOX WITH MAXIMUM DISTANCE SO AS TO OFFER THE GREATEST CABLE BEND RADIUS WITHIN THE BOX. WHERE CONDUIT ROUTING EXCEEDS 75' IN LENGTH, PROVIDE A PULL BOX SUCH THAT EACH RUN BETWEEN PULL BOXES IS OF EQUAL LENGTH AND LESS THAN 75'. CONDUIT BODIES ('LB' OR SIMILAR TYPE) ARE NOT ALLOWED TO MEET THESE REQUIREMENTS. NOTE PULL BOX LOCATIONS AND THE OUTLETS THEY SERVE ON AS–BUILT DRAWINGS. THE CONTRACTOR SHALL PROVIDE A SYSTEM OF CONDUIT WITH NECESSARY PULL BOXES AND LONG SWEEP BENDS SUCH THAT THE PULLING TENSION ON ANY CABLE DOES NOT EXCEED 25 POUNDS OF PULLING FORCE.

4– ALL CONDUIT SHALL HAVE PLASTIC INSULATED BUSHINGS.

5– SEE PLANS FOR EXACT QUANTITY, LOCATION AND TYPE OF DEVICES.

6– ROUTE CONDUIT IN SUCH A MANNER AS TO MAINTAIN MINIMUM 6" CLEARANCE BETWEEN TELECOMMUNICATION CONDUIT ROUTING PATHWAY AND ANY OTHER SYSTEM CIRCUITRY (I.E.–FIRE ALARM, LIGHTING/POWER, SIGNAL SYSTEMS, ETC) OR LIGHT FIXTURES.

7– THE SYSTEM SHALL BE INSTALLED IN FULL COMPLIANCE WITH BICSI (BUILDING INDUSTRY CONSULTING SERVICES INTERNATIONAL) TELECOMMUNICATION GUIDELINES.

8– THE FINAL INSTALLATION OF THE TELEMETRY SYSTEM WILL BE INSTALLED AT A LATER TIME AFTER CONSTRUCTION HAS BEEN COMPLETED. THE RACEWAY AND OUTLET SYSTEM IS INSTALLED TO ACCOMMODATE THE FUTURE SYSTEM. ALL OUTLETS SHALL HAVE A WEATHERPROOF GASKETED BLANK COVER PLATE INSTALLED ON THE OUTLET.

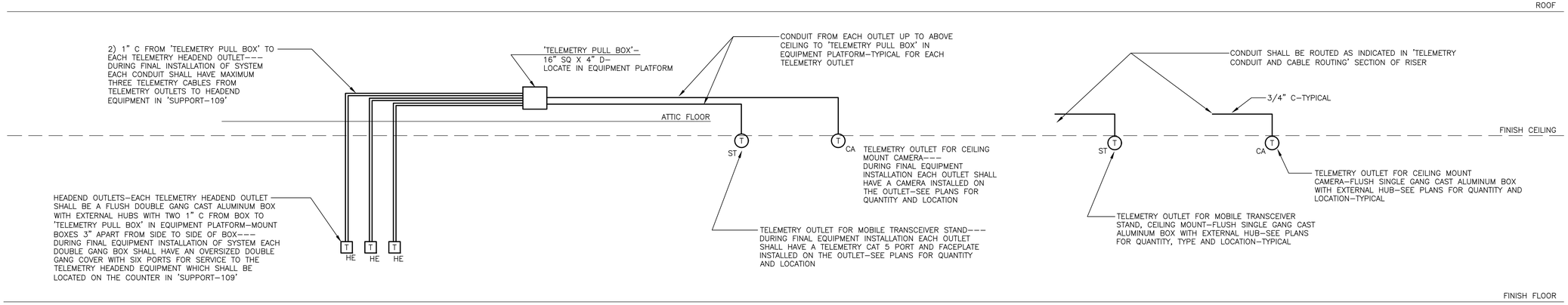

TELEMETRY HEADEND OUTLET, CONDUIT AND CABLE ROUTING — TELEMETRY CONDUIT AND CABLE ROUTING — TELEMETRY OUTLET AND CONDUIT SIZING

1 / E304 TELEMETRY RISER
SCALE: NOT TO SCALE

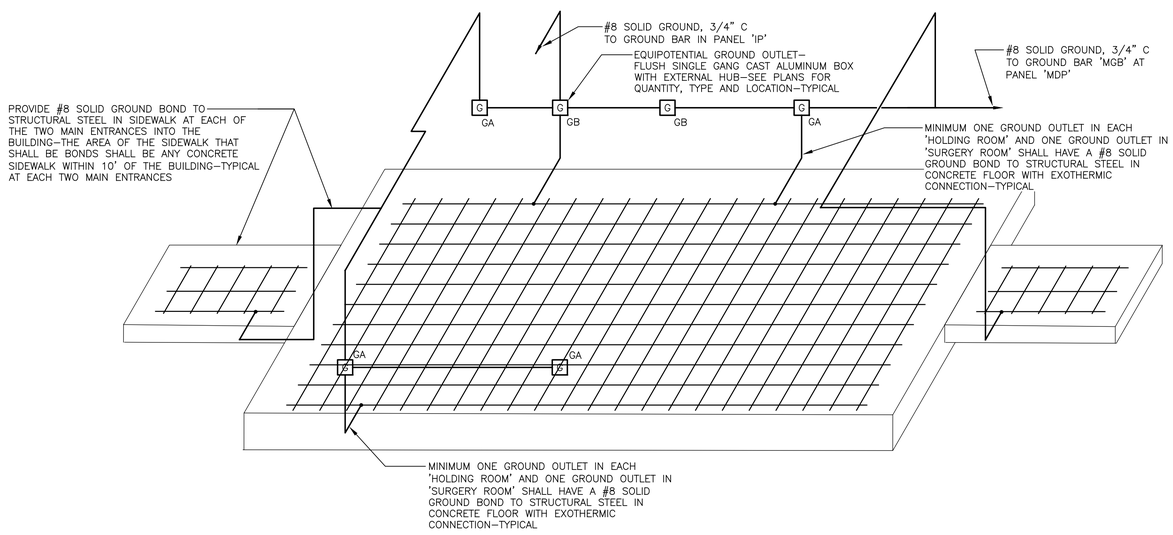

2 / E304 EQUIPOTENTIAL PLANE RISER
SCALE: NOT TO SCALE

EQUIPOTENTIAL PLANE RISER NOTES

1– PROVIDE AN EQUIPOTENTIAL PLANE GROUNDING SYSTEM PER NEC 'ARTICLE 547–AGRICULTURAL BUILDINGS', AND AS INDICATED IN THE RISER. SEE PLANS FOR EQUIPOTENTIAL GROUND OUTLET QUANTITY AND LOCATIONS.

2– SEE PLANS FOR QUANTITY, TYPE AND LOCATION OF GROUND OUTLETS.

3– ALL GROUND OUTLET BOXES SHALL BE SINGLE GANG CAST ALUMINUM BOX WITH EXTERNAL HUB.

4– PROVIDE GROUND CORDS FOR TYPE 'GA' OUTLET PER SPECS.

5– COORDINATE WITH EQUIPMENT BEING PROVIDED WITHIN THE CONSTRUCTION DOCUMENTS AND IN ANIMAL HOLDING ROOMS. PROVIDE AN INSULATED #8 EQUIPMENT GROUNDING CONDUCTOR WITH A RING TERMINAL FOR CONNECTION TO GROUNDING OUTLET TYPE 'GB' AND A BRASS OR OTHER CONNECTION APPROVED BY NEC 547 AND CONNECT ALL EQUIPMENT BEING PROVIDED WITHIN THE CONTRACT TO THE GROUNDING SYSTEM. WHERE METAL EQUIPMENT OR CAGES ARE ELECTRICALLY AND MECHANICALLY BONDED TOGETHER A SINGLE CONNECTION TO THE GROUNDING SYSTEM WILL BE ALLOWED, OTHERWISE EACH PIECE OF EQUIPMENT IN THE CONTRACT SHALL BE BONDED. DAISY CHAINING EQUIPMENT IS ALLOWED. THE CONNECTION TO EQUIPMENT SHALL BE A BRASS, COPPER OR COPPER ALLOY PRESSURE CONNECTOR OR CLAMP.

6– PROVIDE ELECTRICALLY CONDUCTIVE TERMINAL COMPOUND ON ALL THREADED AND CLAMP/CONTACT TERMINATIONS IN ANIMAL HOLDING ROOMS.

7– THE ELECTRICAL CONTRACTOR SHALL COORDINATE WITH OTHER CONTRACTORS INSTALLING CONCRETE AND REINFORCING STEEL IN THE BUILDING SLAB AND THE SIDEWALK AT THE TWO ENTRANCES AND ENSURE THAT THE STEEL IS TIGHTLY BONDED TOGETHER SO AS TO BE ELECTRICALLY CONDUCTIVE CONDUCTIVE THROUGHOUT THE AREA OF THE BUILDING INTERIOR AND THE SIDEWALK AREA WITHIN 10' OF THE BUILDING ENTRANCE IN COMPLIANCE WITH 'NEC–547–AGRICULTURAL BUILDINGS'.

Wagner Architecture, pllc
92 ELAM COURT
NEW HILL, NORTH CAROLINA 27562
TEL. (919) 612.5050

Kramer Engineering Services, pllc
5517 Cascade Dr, Chapel Hill, NC 27514
TEL (919)933-3350
email: donna@kespllc.com
Firm license: P-1099

bennett&pless
formerly LHC STRUCTURAL ENGINEERS
5430 Wade Park Blvd, Suite 400
Raleigh, NC 27607
Tel 919 832 5587

Copyright 2022 • **Bennett & Pless, Inc.**
All Rights Reserved

B & P Job Number 22.08.048

NV5
NV5 ENGINEERS AND CONSULTANTS, INC.
3300 REGENCY PARKWAY, STE 100
CARY, NC 27518
P: 919.851.1912 www.NV5.com
NC License #F-1333
formerly CALYX Engineers + Consultants

NORTH CAROLINA PROFESSIONAL ENGINEER SEAL 14917 5/18/2023 DONNA D. KRAMER

PREPARED FOR
NORTH CAROLINA STATE UNIVERSITY
COLLEGE OF VETERINARY MEDICINE

TRUE NORTH
PLAN NORTH

TRANSLATIONAL RESEARCH FACILITY

revisions

building number

cadd file number

drawn by JEY

checked by DDK

date ISSUED FOR CONSTRUCTION 05/18/2023

project number
NCSU CODE: 42124
ITEM: 305
WA 202207
SCO#: 21–24030–01A

RISERS

sheet number: E304

revision number:

PANEL 'MDP'

VOLTAGE, PHASE, WIRE AND AIC RATING :	120/208V, 3 PHASE, 4 WIRE, 42k AIC
MOUNTING :	SURFACE MOUNT
PHASE BUSSING AND MAINS :	400A MAINS WITH 400A MAIN BREAKER (ET-LI)
NEUTRAL AND GROUND BAR:	NEUTRAL 100%, AND GROUND BAR
OTHER :	PANEL SHALL BE UL LISTED SUITABLE FOR SERVICE ENTRANCE

LOAD IN KVA A	B	C	DESCRIPTION	TRIP	CKT		CKT	TRIP	DESCRIPTION	LOAD IN KVA A	B	C
0.00	---	---	SPACE	3P---	1		2	--	SPACE	0.00	---	---
---	0.00	---	--	--	3		4	2P-30	PANEL 'IP'	---	1.44	---
---	---	0.00	--	--	5		6	--	5kVA, ISOLATED POWER PNL	---	---	1.44
0.00	---	---	SPACE	3P---	7		8	3P---	SPACE	0.00	---	---
---	0.00	---	--	--	9		10	--	--	---	0.00	---
---	---	0.00	--	--	11		12	--	--	---	---	0.00
5.66	---	---	PANEL 'A'	3P-150	13		14	3P-150	PANEL 'MA'	9.35	---	---
---	5.90	---	--	--	15		16	--	--	---	10.85	---
---	---	5.81	--	--	17		18	--	--	---	---	11.51
0.00	---	---	SPACE	3P---	19		20	3P-200	PANEL 'MB'	12.62	---	---
---	0.00	---	--	--	21		22	--	--	---	14.09	---
---	---	0.00	--	--	23		24	--	--	---	---	13.43
0.00	---	---	SPACE	3P---	25		26	3P---	SPACE	0.00	---	---
---	0.00	---	--	--	27		28	--	--	---	0.00	---
---	---	0.00	--	--	29		30	--	--	---	---	0.00

TOTAL CONNECTED LOAD			
PHASE	A	B	C
KVA PER PHASE	27.6	32.3	32.2
AMPS PER PHASE	230	269	268
TOTAL CONNECTED KVA	92		
DEMAND kVA / AMPS	57	/	158
FEEDER AMPERAGE	400		

PANEL 'IP'

VOLTAGE, PHASE, WIRE AND AIC RATING :	120V, SINGLE PHASE, 2 WIRE, 10k AIC
MOUNTING :	FLUSH MOUNT
TRANSF, PHASE BUSSING AND MAINS :	5 kVA, 208V PRIM, 120V SEC, 2P-30A PRIMARY MB, 120V SECONDARY
NEUTRAL AND GROUND BAR:	GROUND BAR
OTHER :	SQUARE D #SXM05BAQOU230, ST4526, SB432406 OR APPROVED EQUAL

LOAD IN KVA A	B	C	DESCRIPTION	TRIP	CKT		CKT	TRIP	DESCRIPTION	LOAD IN KVA A	B	C
0.10	---	---	LIGHTS-OR LTS	2P-20	1		2	2P-20	RECEPTACLES	0.27	---	---
---	0.10	---	--	--	3		4	--	--	---	0.27	---
0.27	---	---	RECEPTACLES	2P-20	5		6	2P-20	RECEPTACLES	0.27	---	---
---	0.27	---	--	--	7		8	--	--	---	0.27	---
0.27	---	---	RECEPTACLES	2P-20	9		10	2P-20	RECEPTACLES	0.18	---	---
---	0.27	---	--	--	11		12	--	--	---	0.18	---
0.18	---	---	RECEPTACLES	2P-20	13		14	2P-20	RECEPTACLES	0.27	---	---
---	0.18	---	--	--	15		16	--	--	---	0.27	---

NOTES
1- PANEL SHALL BE MEDICAL ISOLATED POWER SYSTEM PANEL WITH INTERNAL LINE ISOLATION MONITOR, AND REMOTE LINE ISOLATION MONITOR.
2- PANEL SHALL BE 24" WIDE X 6" DEEP.
3- PROVIDE PHENOLIC LABEL ON PANEL INDICATING "ORANGE RECEPTACLES ARE FED FROM PANEL 'IP."

TOTAL CONNECTED LOAD			
PHASE	A	B	C
KVA PER PHASE	1.81	1.81	
AMPS PER PHASE	15	15	
TOTAL CONNECTED KVA	4		
DEMAND kVA / AMPS	3.62	/	17
FEEDER AMPERAGE	30		

EXISTING PANEL 'MP'

VOLTAGE, PHASE, WIRE AND AIC RATING :	120/208V, 3 PHASE, 4 WIRE, 65k AIC
MOUNTING :	SURFACE PAD MOUNT, NEMA 3R
PHASE BUSSING AND MAINS :	1200A MAINS WITH MAIN LUGS ONLY
NEUTRAL AND GROUND BAR:	NEUTRAL 100%, AND GROUND BAR
OTHER :	GE 'SPECTRA SERIES SWITCHBOARD'

LOAD IN KVA A	B	C	DESCRIPTION	TRIP	CKT		CKT	TRIP	DESCRIPTION	LOAD IN KVA A	B	C
0.00	---	---	SPACE	--	1		2	--	SPACE	0.00	---	---
---	0.00	---	SPACE	--	3		4	--	SPACE	---	0.00	---
---	---	0.00	SPACE	--	5		6	--	SPACE	---	---	0.00
0.00	---	---	SPACE	--	7		8	**3P-400**	**PANEL 'MDP' (TRF BLDG)**	**27.20**	**---**	**---**
---	0.00	---	SPACE	--	9		10	**N**	**NOTE #1**	**---**	**31.38**	**---**
---	---	0.00	SPACE	--	11		12	**ET-LI**	**--**	**---**	**---**	**30.23**
---	---	---	PAENL 'DB1'	3P-400	13		14	--	--	0.00	---	---
---	---	---	SGDA32AT0400 BRKR	--	15		16	--	--	---	0.00	---
---	---	---	--	--	17		18	--	--	---	---	0.00
---	---	---	PANEL 'LB1'	3P-225	19		20	3P	SPACE	0.00	---	---
---	---	---	SFHA36AT0250 BRKR	--	21		22	--	--	---	0.00	---
---	---	---	--	--	23		24	--	--	---	---	0.00
---	---	---	PANEL 'EM'	3P-400	25		26	--	--	0.00	---	---
---	---	---	SGDA32AT0400 BRKR	--	27		28	--	--	---	0.00	---
---	---	---	--	--	29		30	--	--	---	---	0.00
---	---	---	PANEL 'LC1'	3P-400	31		32	3P-400	PANEL 'LD1'	---	---	---
---	---	---	SGDA32AT0400 BRKR	--	33		34	--	SGDA32AT0400 BRKR	---	---	---
---	---	---	--	--	35		36	--	--	---	---	---
---	---	---	PANEL 'LE1'	3P-350	37		38	3P-400	PANEL 'MDP-A'	---	---	---
---	---	---	SGDA32AT0400 BRKR	--	39		40	--	SGDA32AT0400 BRKR	---	---	---
---	---	---	--	--	41		42	--	--	---	---	---

Notes
#1 - COORDINATE WITH MFR AND RECONFIGURE PANEL FOR INSTALLATION OF NEW BREAKER INDICATED.

TOTAL DEMAND			
SEE TOTAL CONNECTED LOAD ON E002 FOR DETIALED DEMAND INFORMATION OF EXISTING PANEL			
DEMAND kVA / AMPS	412	/	1143
FEEDER AMPERAGE	1200		

PANEL 'A'

VOLTAGE, PHASE, WIRE AND AIC RATING :	120/208V, 3 PHASE, 4 WIRE, 22k AIC
MOUNTING :	SURFACE MOUNT
PHASE BUSSING AND MAINS :	225A MAINS WITH 225A MAIN LUGS ONLY
NEUTRAL AND GROUND BAR:	NEUTRAL 100%, AND GROUND BAR
OTHER :	

LOAD IN KVA A	B	C	DESCRIPTION	TRIP	CKT		CKT	TRIP	DESCRIPTION	LOAD IN KVA A	B	C
1.30	---	---	LIGHTS	20	1		2	20	SPACE	0.00	---	---
---	1.24	---	LIGHTS	20	3		4	20	LIGHTS-SURGICAL	---	0.20	---
---	---	1.29	LIGHTS	20	5		6	20	LIGHTS	---	---	0.49
0.00	---	---	SPACE	20	7		8	20	EMREGENCY LTS-NOTE #1	0.40	---	---
---	0.00	---	SPACE	20	9		10	20	'FACP' - NOTE #1	---	0.50	---
---	---	0.00	SPACE	20	11		12	20	HEPA DIFFUSERS	---	---	0.60
0.54	---	---	RECEPT	20	13		14	20	RECEPT	0.72	---	---
---	0.54	---	RECEPT	20	15		16	20	RECEPT	---	0.72	---
---	---	0.72	RECEPT	20	17		18	20	RECEPT	---	---	0.72
0.54	---	---	RECEPT	20	19		20	20	RECEPT	0.72	---	---
---	0.54	---	RECEPT	20	21		22	20	RECEPT	---	0.54	---
---	---	0.72	RECEPT	20	23		24	20	RECEPT	---	---	0.36
0.72	---	---	RECEPT	20	25		26	20	RECEPT	0.54	---	---
---	0.54	---	RECEPT	20	27		28	20	RECEPT	---	0.90	---
---	---	0.00	SPARE	20	29		30	20	RECEPT	---	---	0.72
0.00	---	---	SPARE	20	31		32	20	RECEPT	0.18	---	---
---	0.00	---	SPARE	20	33		34	20	RECEPT	---	0.18	---
---	---	0.00	SPARE	20	35		36	20	RECEPT	---	---	0.18
0.00	---	---	SPARE	20	37		38	--	SPACE	0.00	---	---
---	0.00	---	SPARE	2P-20	39		40	--	SPACE	---	0.00	---
---	---	0.00	--	--	41		42	--	SPACE	---	---	0.00

NOTES
#1 - PROVIDE LOCK-ON DEVICE ON BREAKER PER CODE.
#2 - MOUNT ON CHANNEL ON EXTERIOR WALL

TOTAL CONNECTED LOAD			
PHASE	A	B	C
KVA PER PHASE	6	6	6
AMPS PER PHASE	47	49	48
TOTAL CONNECTED KVA	17		
DEMAND kVA / AMPS	18	/	50
FEEDER AMPERAGE	150		

PANEL 'MA'

VOLTAGE, PHASE, WIRE AND AIC RATING :	120/208V, 3 PHASE, 4 WIRE, 10K AIC
MOUNTING :	SURFACE MOUNT
PHASE BUSSING AND MAINS :	225A MAIN LUGS ONLY
NEUTRAL AND GROUND BAR:	NEUTRAL 100%, AND GROUND BAR
OTHER :	

LOAD IN KVA A	B	C	DESCRIPTION	TRIP	CKT		CKT	TRIP	DESCRIPTION	LOAD IN KVA A	B	C
0.00	---	---	SPARE	20	1		2	20	SPARE	0.00	---	---
---	0.54	---	RECEPT	20	3		4	20	'CP-1'	---	0.25	---
---	---	0.54	RECEPT	20	5		6	20	TRAP PRIMER CONTROLS	---	---	0.50
0.00	---	---	SPARE	20	7		8	20	'EF-1'	0.53	---	---
---	0.00	---	SPARE	20	9		10	20	'FCU-1'	---	0.59	---
---	---	0.00	SPARE	20	11		12	20	MECH CONTROL PANEL	---	---	1.00
0.00	---	---	SPARE	3P-20	13		14	20	SPARE	0.00	---	---
---	0.00	---	--	--	15		16	2P-15	'HWP-2'	---	0.34	---
---	---	0.00	--	--	17		18	--	1/4 HP	---	---	0.34
1.27	---	---	'CHWP-1'	3P-20	19		20	3P-15	'EF-2A'	0.90	---	---
---	1.27	---	3 HP	--	21		22	--	2 HP	---	0.90	---
---	---	1.27	--	--	23		24	--	--	---	---	0.90
1.27	---	---	'HWP-1A'	3P-20	25		26	3P-30	'AHU-1'	2.01	---	---
---	1.27	---	3 HP	--	27		28	--	5 HP	---	2.01	---
---	---	1.27	--	--	29		30	--	3 #10, 1 #10EG, 3/4" C	---	---	2.01
1.36	---	---	'CRU-1'	3P-15	31		32	3P-30	'AHU-1'	2.01	---	---
---	1.36	---	2) 1 HP	--	33		34	--	5 HP	---	2.01	---
---	---	1.36	--	--	35		36	--	3 #10, 1 #10EG, 3/4" C	---	---	2.01
0.71	---	---	HOIST	3P-15	37		38	--	SPACE	0.00	---	---
---	0.71	---	1 HP & 1/4 HP	--	39		40	--	SPACE	---	0.00	---
---	---	0.71	--	--	41		42	--	SPACE	---	---	0.00

TOTAL CONNECTED LOAD			
PHASE	A	B	C
KVA PER PHASE	10.1	11.3	11.9
AMPS PER PHASE	84	94	99
TOTAL CONNECTED KVA	33		
DEMAND kVA / AMPS	35	/	96
FEEDER AMPERAGE	150		

PANEL 'MB'

VOLTAGE, PHASE, WIRE AND AIC RATING :	120/208V, 3 PHASE, 4 WIRE, 10K AIC
MOUNTING :	SURFACE MOUNT
PHASE BUSSING AND MAINS :	225A MAIN LUGS ONLY
NEUTRAL AND GROUND BAR:	NEUTRAL 100%, AND GROUND BAR
OTHER :	

LOAD IN KVA A	B	C	DESCRIPTION	TRIP	CKT		CKT	TRIP	DESCRIPTION	LOAD IN KVA A	B	C
0.00	---	---	SPARE	20	1		2	20	TIME CLK 'AWTC', SOLENOIDS	0.03	---	---
---	0.00	---	SPARE	20	3		4	20	MECH CONTROL PANEL	---	1.00	---
---	---	0.00	SPARE	20	5		6	20	MECH CONTROL PANEL	---	---	1.00
0.25	---	---	HVAC/WTR METERS	20	7		8	20	MECH CONTROL PANEL	1.50	---	---
---	0.50	---	AHU LTS	20	9		10	20	MECH CONTROL PANEL	---	1.50	---
---	---	0.75	AHU UV	20	11		12	20	'FCU-1'	---	---	0.59
0.90	---	---	'EF-2B'	3P-15	13		14	3P-20	'HWP-1B'	1.27	---	---
---	0.90	---	2 HP	--	15		16	--	3 HP	---	1.27	---
---	---	0.90	--	--	17		18	--	--	---	---	1.27
0.90	---	---	'EF-2C'	3P-15	19		20	3P-30	'AHU-1'	2.01	---	---
---	0.90	---	2 HP	--	21		22	--	5 HP	---	2.01	---
---	---	0.90	--	--	23		24	--	3 #10, 1 #10EG, 3/4" C	---	---	2.01
4.00	---	---	'WH-1'	3P-50	25		26	3P-30	'AHU-1'	2.01	---	---
---	4.00	---	12 Kw	--	27		28	--	5 HP	---	2.01	---
---	---	4.00	3 #8, 1 #10EG, 3/4" C	--	29		30	--	3 #10, 1 #10EG, 3/4" C	---	---	2.01
0.00	---	---	'MV-1'	3P-40	31		32	--	SPACE	0.00	---	---
---	0.00	---	--	--	33		34	--	SPACE	---	0.00	---
---	---	0.00	3 #8, 1 #10EG, 3/4" C	--	35		36	--	SPACE	---	---	0.00
0.00	---	---	SPACE	--	37		38	--	SPACE	0.00	---	---
---	0.00	---	SPACE	--	39		40	--	SPACE	---	0.00	---
---	---	0.00	SPACE	--	41		42	--	SPACE	---	---	0.00

TOTAL CONNECTED LOAD			
PHASE	A	B	C
KVA PER PHASE	12.9	14.1	13.4
AMPS PER PHASE	107	117	112
TOTAL CONNECTED KVA	40		
DEMAND kVA / AMPS	43	/	120
FEEDER AMPERAGE	200		

ELECTRICAL PANEL NOTES

1– ALL BREAKERS SERVING FIRE ALARM PANELS, NOTIFICATION APPLIANCE CIRCUIT POWER SUPPLIES, RECEPTACLES ON TELECOM 'MTP' PANELS, AND OTHER FIRE ALARM MODULES, DEVICES OR EQUIPMENT SHALL HAVE A BREAKER HANDLE LOCK–ON TAB TO PREVENT INADVERTENT OPENING OF BREAKER.

2– BREAKERS AND CIRCUITS SHALL BE ARRANGED AS SHOWN IN PANEL SCHEDULES AND AS CIRCUITED ON DRAWINGS UNLESS THE MANUFACTURING PROCESS OR SPECIALTY BREAKER/ACCESSORY DICTATES OTHERWISE. LEAVING BREAKERS AND CIRCUITS "AS SHIPPED" FROM MANUFACTURER FOR CONVENIENCE WILL NOT BE ACCEPTED.

3– ALL SPARE BREAKERS SHALL BE LEFT IN THE 'OFF' POSITION.

4– AT SURFACE MOUNT PANELS LABEL EACH CONDUIT AT THE PANEL WITH CIRCUIT NUMBERS IN THE CONDUIT, AND ROOM NUMBERS CONDUITS SERVE.

5– PANEL 'A' SHALL HAVE THE FOLLOWING SPARE EMPTY CONDUITS STUBBED OUT FROM PANEL ABOVE THE FINISHED CEILING AND TERMINATED INTO THE EQUIPMENT PLATFORM IN AN ACCESSIBLE LOCATION. TERMINATE EACH CONDUIT IN A JUNCTION BOX.

a– 4) 3/4" CONDUIT
b– 2) 1" CONDUIT
c– 1) 1 1/2" CONDUIT

6– PANELS SHALL BE MOUNTED MINIMUM 9" ABOVE THE FLOOR TO THE BOTTOM OF THE PANEL UNLESS THE PANEL IS 91" OR DOING SO WILL RESULT IN OVERCURRENT PROTECTION HANDLES MOUNTED ABOVE 6'–6" ABOVE THE FLOOR. ONLY SWITCHBOARDS, MOTOR CONTROL CENTERS AND 91" HIGH PANELS MAY BE MOUNTED DIRECTLY ON THE FLOOR.

7– PANEL 'IP' BRANCH CIRCUITRY SHALL BE #10 XHHW–2 WIRING. SEE SPECIFICATIONS FOR WIRE COLOR AND OTHER SPECIFIC REQUIREMENTS.

8– PANEL SCHEDULE 'TRIP' COLUMN PREFIX OR MAIN BREAKER ABBREVIATIONS ARE AS FOLLOWS:

GF = GROUND FAULT CIRCUIT INTERRUPTER TYPE BREAKER
ET–LSI = ELECTRONIC TRIP, ADJUSTABLE WITH LONG TIME CURRENT, SHORT TIME CURRENT AND INSTANTANEOUS TRIP SETTINGS
ET–LI = ELECTRONIC TRIP, ADJUSTABLE WITH LONG TIME CURRENT, LONG TIME DELAY AND INSTANTANEOUS TRIP SETTINGS

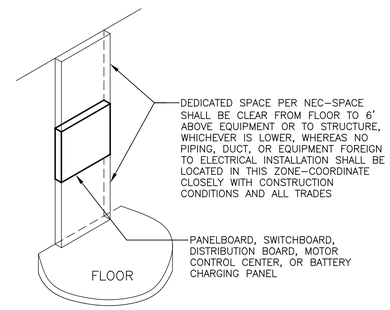

DEDICATED SPACE REQUIREMENTS

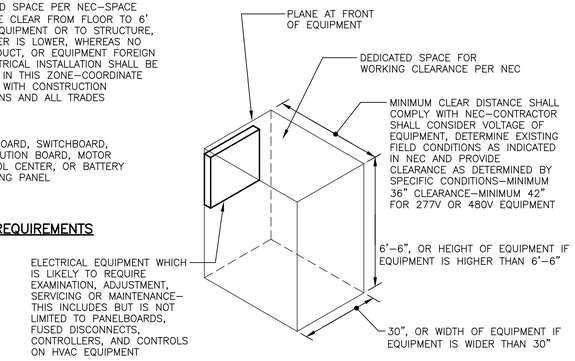

WORKING CLEARANCE REQUIREMENTS

NOTE – ELECTRICAL CONTRACTOR SHALL VERIFY EXACT ELECTRICAL EQUIPMENT LOCATION IN FIELD WITH CONDITIONS AND WITH OTHER EQUIPMENT INSTALLED BY OTHER CONTRACTORS TO ENSURE COMPLIANCE WITH THE NEC DEDICATED SPACE AND WORKING CLEARANCE REQUIREMENTS. ELECTRICAL CONTRACTOR SHALL COORDINATE AND ADVISE OTHER CONTRACTORS OF THESE REQUIREMENTS TO AVOID CONFLICTS.

1 E401 ELECTRICAL EQUIPMENT DEDICATED SPACE AND WORKING CLEARANCE
SCALE: NOT TO SCALE

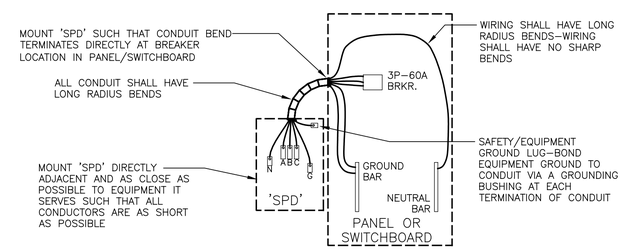

NOTES

1– WIRING SIZE SHALL BE LARGEST SIZE TERMINABLE UPON 'SPD' LUG AND BREAKER. COORDINATE WITH PARTICULAR 'SPD' MANUFACTURER. MINIMUM WIRE SIZE SHALL BE #2.

2– ROUTE CIRCUITRY AS SHORT AND DIRECT AS POSSIBLE.

2 E401 'SPD' INSTALLATION DETAIL
SCALE: NOT TO SCALE

Wagner Architecture, pllc
92 ELAM COURT
NEW HILL, NORTH CAROLINA 27562
TEL. (919) 612.5050

Kramer Engineering Services, pllc
5517 Cascade Dr, Chapel Hill, NC 27514
TEL (919)933-3350
email: donna@kespllc.com
Firm license: P-1099

bennett&pless
formerly LHC STRUCTURAL ENGINEERS
5430 Wade Park Blvd, Suite 400
Raleigh, NC 27607
Tel 919 832 5587

Copyright 2022 • Bennett & Pless, Inc.
All Rights Reserved

B & P Job Number 22.08.048

NV5 ENGINEERS AND CONSULTANTS, INC.
3300 REGENCY PARKWAY, STE 100
CARY, NC 27518
P: 919.851.1912 www.NV5.com
NC License #F-1333
formerly CALYX Engineers • Consultants

NORTH CAROLINA PROFESSIONAL ENGINEER SEAL 14917 5/18/2023 DONNA D. KRAMER

PREPARED FOR
NORTH CAROLINA STATE UNIVERSITY
COLLEGE OF VETERINARY MEDICINE

TRUE NORTH
PLAN NORTH

TRANSLATIONAL RESEARCH FACILITY

revisions

building number
cadd file number
drawn by JEY
checked by DDK
date ISSUED FOR CONSTRUCTION 05/18/2023
project number NCSU CODE: 42124 ITEM: 305 WA 202207 SCO#: 21–24030–01A

PANEL SCHEDULES, DETAILS

sheet number: E401
revision number:

Wagner Architecture, pllc
92 ELAM COURT
NEW HILL, NORTH CAROLINA 27562
TEL. (919) 612.5050

Kramer Engineering Services, pllc
5517 Cascade Dr, Chapel Hill, NC 27514
TEL (919)933-3350
email: donna@kespllc.com
Firm license: P-1099

bennett&pless
formerly LHC STRUCTURAL ENGINEERS
5430 Wade Park Blvd, Suite 400
Raleigh, NC 27607
Tel 919 832 5587
Copyright 2022 • Bennett & Pless, Inc.
All Rights Reserved
B & P Job Number 22.08.048

NV5
NV5 ENGINEERS AND CONSULTANTS, INC.
3300 REGENCY PARKWAY, STE 100
CARY, NC 27518
P: 919.851.1912 www.NV5.com
NC License # F-1333
formerly CALYX Engineers + Consultants

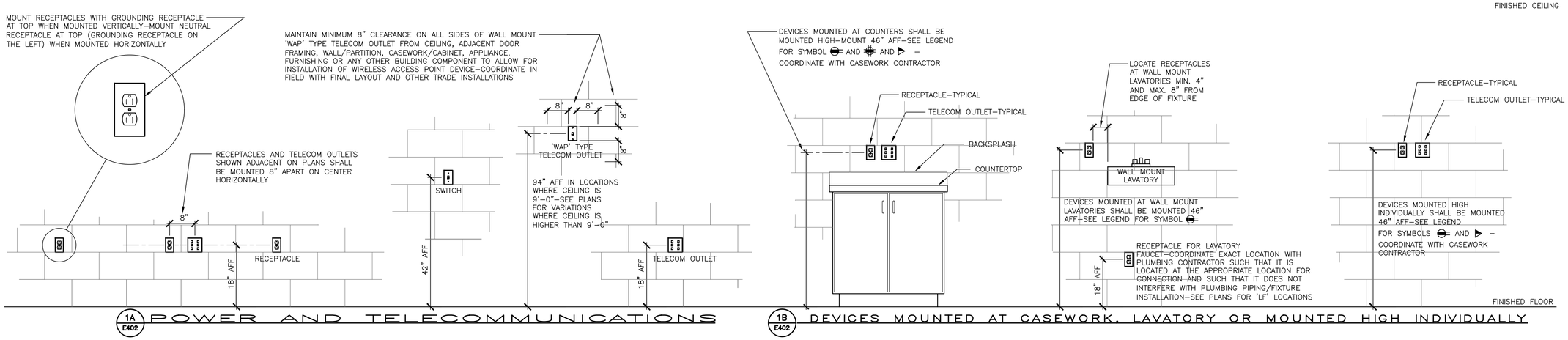

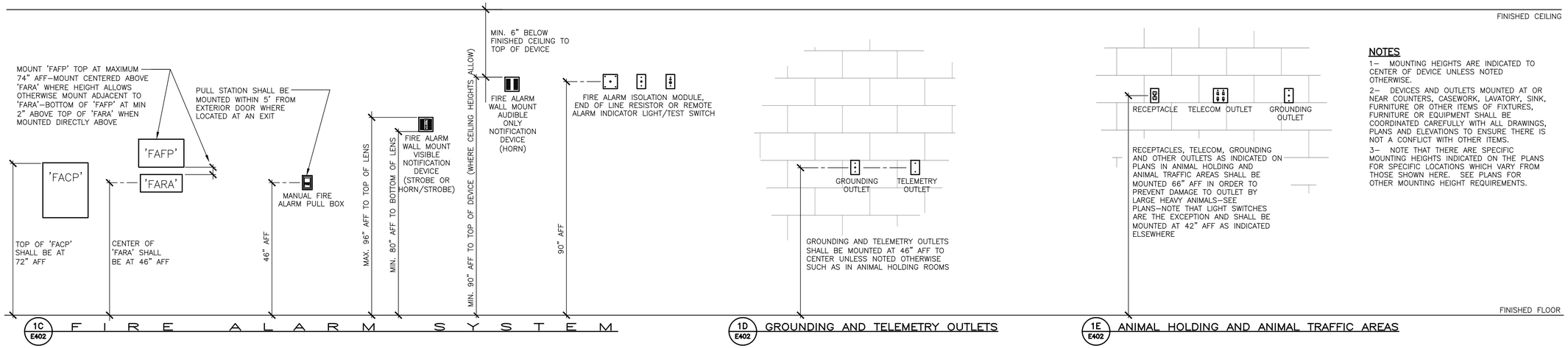

NOTES

1– MOUNTING HEIGHTS ARE INDICATED TO CENTER OF DEVICE UNLESS NOTED OTHERWISE.

2– DEVICES AND OUTLETS MOUNTED AT OR NEAR COUNTERS, CASEWORK, LAVATORY, SINK, FURNITURE OR OTHER ITEMS OF FIXTURES, FURNITURE OR EQUIPMENT SHALL BE COORDINATED CAREFULLY WITH ALL DRAWINGS, PLANS AND ELEVATIONS TO ENSURE THERE IS NOT A CONFLICT WITH OTHER ITEMS.

3– NOTE THAT THERE ARE SPECIFIC MOUNTING HEIGHTS INDICATED ON THE PLANS FOR SPECIFIC LOCATIONS WHICH VARY FROM THOSE SHOWN HERE. SEE PLANS FOR OTHER MOUNTING HEIGHT REQUIREMENTS.

1 E402 MOUNTING HEIGHTS AND CONFIGURATIONS

SCALE: NOT TO SCALE

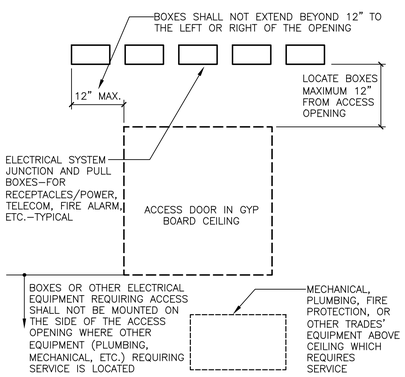

PLAN

NOTES

1– BOXES INSTALLED ABOVE THE GYP BOARD CEILING WHERE AN ACCESS DOOR WILL BE REQUIRED ARE PROHIBITED EXCEPT WHERE ACCESS DOORS ARE LOCATED ON THE ARCHITECTURAL DRAWINGS REFLECTED CEILING PLAN, AND WHERE SPECIFICALLY REQUIRED BY PARTICULAR EQUIPMENT FOR THE INSTALLATION (SURGICAL LIGHTS), AND WHERE SPECIFICALLY REQUESTED AND ALLOWED BY THE DESIGNER IN WRITING. THE CONTRACTOR SHALL INSTALL BOXES ON THE EQUIPMENT PLATFORM ON AND/OR WITHIN THE STRUCTURE AT AN ACCESSIBLE LOCATION FROM THE EQUIPMENT PLATFORM FLOOR AS REQUIRED TO SERVE THE ROOMS BELOW. WHEN BOXES ARE ALLOWED TO BE INSTALLED ABOVE THE GYP BOARD CEILING, THEN THE CONTRACTOR SHALL INSTALL BOXES AS INDICATED IN THIS DETAIL.

2– WHERE SO REQUIRED AND ALLOWED TO INSTALL BOXES ABOVE THE GYP BOARD CEILING THE FOLLOWING SHALL APPLY:

A. COORDINATE CAREFULLY WITH ARCHITECTURAL DRAWINGS AND GEN. CONTR. TO UNDERSTAND REQUIRED LOCATION OF ACCESS DOORS IN GYP BOARD CEILING. LOCATION FOR JUNCTION BOXES ABOVE CEILING IS LIMITED AND JUNCTION BOXES MUST BE INSTALLED AT ACCESS DOOR IN GYP BOARD CEILINGS. THE ELECTRICAL CONTRACTOR SHALL COORDINATE THESE LOCATIONS EARLY SUCH THAT ALL INVOLVED PARTIES AND CONTRACTORS ARE COORDINATED AND CONFLICTS ARE AVOIDED.

B. COORDINATE CAREFULLY WITH MECHANICAL, PLUMBING AND OTHER CONTRACTORS PRIOR TO ANY INSTALLATION TO DETERMINE EXACT LOCATIONS AND ELEVATIONS OF BOXES IN ORDER TO MAINTAIN NECESSARY ACCESS AND CLEARANCE TO BOXES AND OTHER EQUIPMENT BEING INSTALLED.

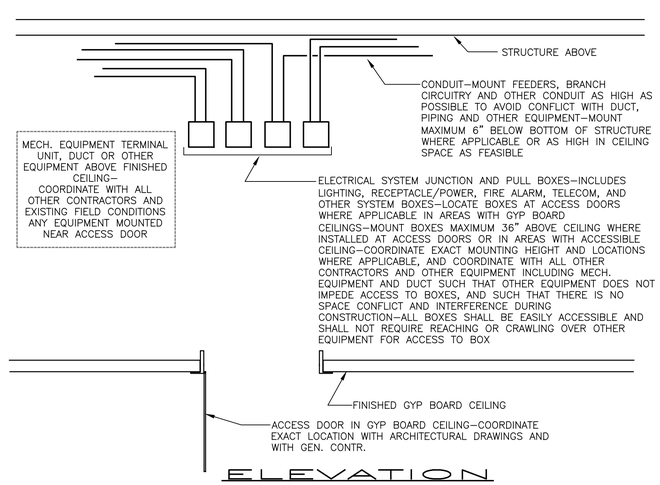

ELEVATION

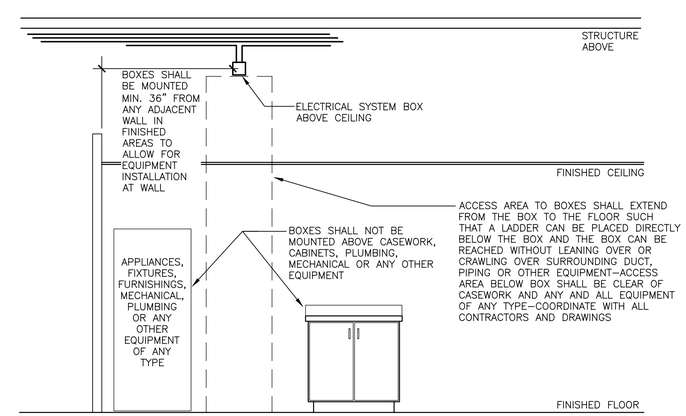

ELEVATION – BOXES NEAR EQUIPMENT

2 E402 BOX, OUTLET AND CONDUIT INSTALLATION

NOT TO SCALE

PREPARED FOR
NORTH CAROLINA STATE UNIVERSITY
COLLEGE OF VETERINARY MEDICINE

TRUE NORTH
PLAN NORTH

TRANSLATIONAL RESEARCH FACILITY

revisions

building number

cadd file number

drawn by JEY

checked by DDK

date ISSUED FOR CONSTRUCTION 05/18/2023

project number NCSU CODE: 42124
ITEM: 305
WA 202207
SCO#: 21–24030–01A

DETAILS

sheet number: E402

revision number:

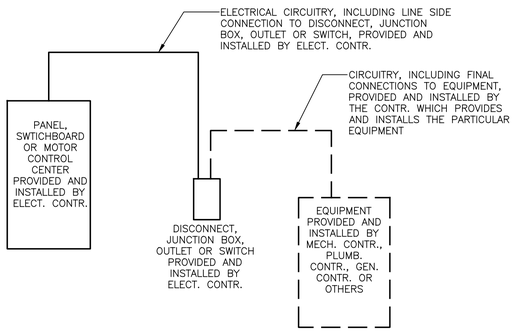

EQUIPMENT WHICH DOES NOT REQUIRE A MOTOR STARTER

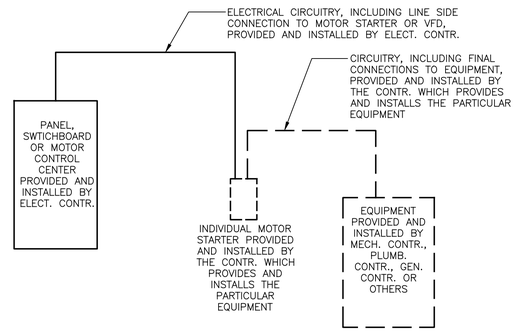

EQUIPMENT REQUIRING AN INDIVIDUAL MOTOR STARTER

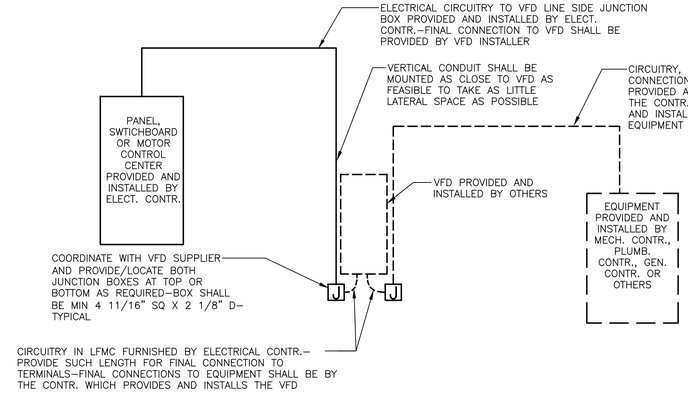

VFD WIRING

EQUIPMENT REQUIRING A VFD WHICH IS ADJACENT TO THE EQUIPMENT IT SERVES

NOTES

1– COORDINATE CLOSELY WITH ALL OTHER TRADES AND PROVIDE EQUIPMENT AND CIRCUITRY AS INDICATED.

2– COORDINATE WITH THE EQUIPMENT PROVIDER AND PROVIDE A SWITCH OR OTHER DISCONNECTING MEANS OF SUITABLE VOLTAGE AND AMPERAGE FOR MOTORS AT ALL MOTOR LOCATIONS.

3– IN SOME CASES THE ELECTRICAL DRAWINGS MAY SHOW CONDUIT AND CIRCUITRY FROM THE DISCONNECT FOR THE EQUIPMENT. PROVIDE RACEWAY AND CIRCUITRY AS SHOWN HOWEVER DO NOT MAKE FINAL CONNECTIONS. ALL FINAL CONNECTIONS ARE BY OTHERS.

4– IN SOME CASES THE ELECTRICAL DRAWINGS MAY SHOW CIRCUITRY FROM THE VFD FOR THE EQUIPMENT. PROVIDE CIRCUITRY AS SHOWN HOWEVER DO NOT MAKE FINAL CONNECTIONS. ALL FINAL CONNECTIONS ARE BY OTHERS.

5– ALL CONNECTIONS TO THE VFD WHETHER ON LINE SIDE OR LOAD SIDE SHALL BE TERMINATED BY THE SUPPLIER OF THE VFD.

6– COORDINATE WITH OTHER CONTRACTORS AND INSTALLERS AND ENSURE THE FINAL CONNECTIONS CONTRACTOR PROVIDES LFMC FOR FINAL CONNECTIONS TO ROTATING AND/OR VIBRATING EQUIPMENT.

1 / E403 EQUIPMENT CONNECTIONS AND VFD WIRING

SCALE: NOT TO SCALE

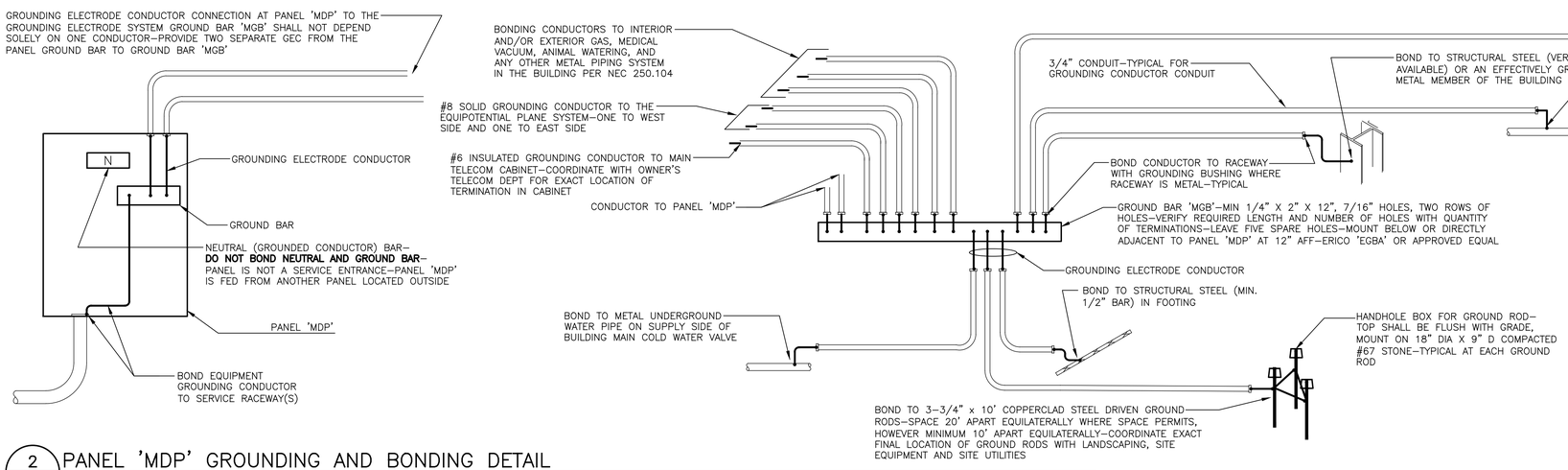

NOTES

1– GROUNDING CONDUCTORS AND BONDING CONDUCTORS SHALL BE BARE COPPER UNO AND SHALL BE SIZED AS INDICATED IN ELECTRICAL RISER AND THIS DETAIL.

2– CONNECTIONS TO STRUCTURAL STEEL AND GROUND RODS SHALL BE EXOTHERMIC WELD.

3– GROUNDING ELECTRODE CONDUCTOR CONDUIT TO GROUND RODS, UNDERGROUND WATER PIPING, STRUCTURAL STEEL IN FOUNDATION OR OTHER GEC ITEMS BELOW GRADE SHALL BE SCHEDULE 80 PVC UNO OR REQUIRED OTHERWISE BY NCSBC OR LOCAL AUTHORITY. GROUNDING ELECTRODE OR BONDING CONDUCTOR CONDUIT INSIDE BUILDING MAY BE SCHEDULE 40 PVC UNO OR REQUIRED OTHERWISE BY NCSBC OR LOCAL AUTHORITY. WHERE CONDUIT IS METAL, BOND CONDUCTOR TO CONDUIT AT EACH END BY MEANS OF A GROUNDING BUSHING.

4– EACH INDIVIDUAL CONDUCTOR SHALL BE CONTINUOUS FROM GROUND BAR TO ITEM. DAISY CHAINING OF CONDUCTOR FROM ITEM TO ITEM IS NOT ALLOWED.

5– PROVIDE GROUND ROD LENGTH (MINIMUM 10') TO ACHIEVE GROUND ROD RESISTANCE OF LESS THAN 10 OHMS AT SERVICE EQUIPMENT.

6– LABEL EACH CONDUCTOR AT GROUND BAR AS TO THE TERMINATION POINT OF THE WIRE. LABEL SHALL BE HEAVY PAPER TAG WITH WIRE ATTACHMENT.

7– NOTE THAT SERVICE PANEL 'MDP' IS **NOT** A SERVICE ENTRANCE EQUIPMENT PANEL AND THE NEUTRAL BAR SHALL **NOT** BE BONDED TO THE GROUND BAR. PANEL 'MDP' IS SERVED BY EXISTING PANEL 'MP' OUTSIDE WHICH IS THE SERVICE ENTRANCE EQUIPMENT PANEL.

2 / E403 PANEL 'MDP' GROUNDING AND BONDING DETAIL

SCALE: NOT TO SCALE

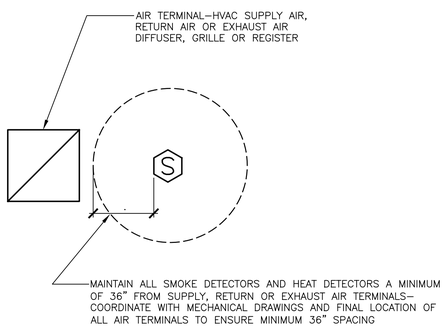

3 / E403 SMOKE AND HEAT DETECTOR CLEARANCE FROM AIR TERMINALS

SCALE: NOT TO SCALE

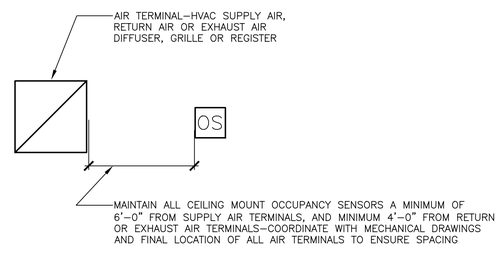

NOTE

PRIOR TO INSTALLING OCCUPANCY SENSORS COORDINATE THE EXACT FINAL LOCATION OF ALL HVAC SUPPLY, RETURN AND EXHAUST AIR OUTLETS, DIFFUSERS AND REGISTERS AND LOCATE OCCUPANCY SENSORS AS INDICATED. FINAL ADJUSTMENT OF LOCATION OF OCCUPANCY SENSORS IS THE RESPONSIBILITY OF THE ELECTRICAL CONTRACTOR TO ENSURE SENSOR IS NOT NUISANCE ACTIVATED BY AIR MOVEMENT. SEE PARTICULAR MANUFACTURER'S RECOMMENDED INSTALLATION INSTRUCTIONS.

4 / E403 CEILING MOUNT OCCUPANCY SENSOR CLEARANCE FROM AIR TERMINALS

SCALE: NOT TO SCALE

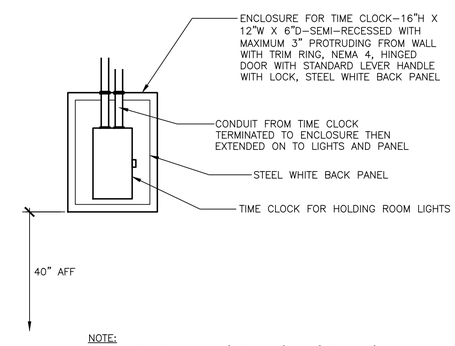

NOTE:
TYPICAL FOR TIME CLOCK 'LCTC–105' AND 'LCTC–110'.

5 / E403 'HOLDING ROOM' LIGHTING TIME CLOCK

NOT TO SCALE

Wagner Architecture, pllc
92 ELAM COURT
NEW HILL, NORTH CAROLINA 27562
TEL. (919) 612.5050

Kramer Engineering Services, pllc
5517 Cascade Dr, Chapel Hill, NC 27514
TEL (919)933-3350
email: donna@kespllc.com
Firm license: P-1099

bennett&pless
formerly LHC STRUCTURAL ENGINEERS
5430 Wade Park Blvd, Suite 400
Raleigh, NC 27607
Tel 919 832 5587

Copyright 2022 • **Bennett & Pless, Inc.**
All Rights Reserved

B & P Job Number 22.08.048

NV5
NV5 ENGINEERS AND CONSULTANTS, INC.
3300 REGENCY PARKWAY, STE 100
CARY, NC 27518
P: 919.851.1912 www.NV5.com
NC License # F-1333
formerly CALV Engineers • Consultants

NORTH CAROLINA PROFESSIONAL SEAL 14917 ENGINEER 5/18/2023 DONNA D. KRAMER

PREPARED FOR
NORTH CAROLINA STATE UNIVERSITY
COLLEGE OF VETERINARY MEDICINE

TRUE NORTH
PLAN NORTH

TRANSLATIONAL RESEARCH FACILITY

revisions

building number

cadd file number

drawn by JEY

checked by DDK

date ISSUED FOR CONSTRUCTION 05/18/2023

project number NCSU CODE: 42124 ITEM: 305 WA 202207 SCO#: 21–24030–01A

DETAILS

sheet number: E403

revision number:

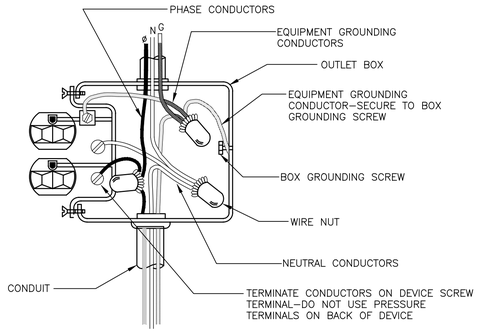

NOTE:

1– PROVIDE WIRE NUT AND PIG TAIL TO DEVICE FOR GROUNDED CONDUCTOR (NEUTRAL) AND EQUIPMENT GROUNDING CONDUCTOR SUCH THAT REMOVAL OF THE DEVICE OR ITS CONDUCTORS DOES NOT INTERFERE WITH THE CONTINUITY OF THE GROUNDED (NEUTRAL) AND EQUIPMENT GROUNDING CONDUCTORS.

2– EQUIPMENT GROUNDING CONDUCTOR SHALL BE CONTINUOUS THROUGH BOX.

1 RECEPTACLE WIRING DETAIL
E404 SCALE: NOT TO SCALE

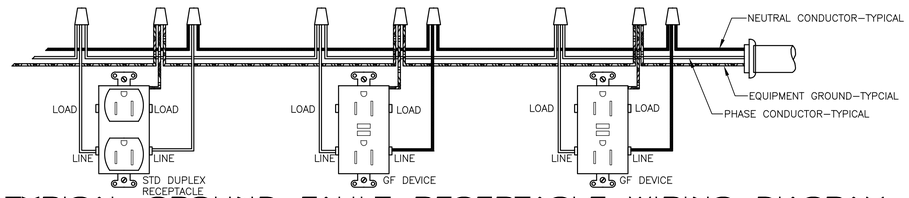

TYPICAL GROUND FAULT RECEPTACLE WIRING DIAGRAM

NOTE: WIRE DOWNSTREAM DEVICES FROM HOMERUN CIRCUITRY/LINE SIDE OF UPSTREAM GROUND FAULT DEVICES. DO NOT WIRE DOWSTREAM DEVICES FROM LOAD SIDE OF GROUND FAULT DEVICES.

2 GROUND FAULT RECEPTACLE WIRING DIAGRAMS
E404 SCALE: NOT TO SCALE

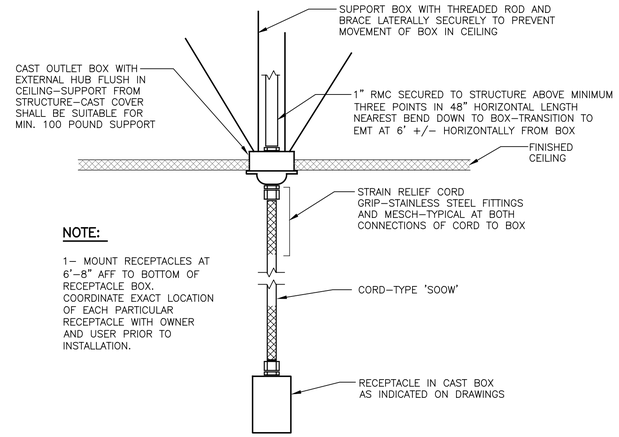

NOTE:

1– MOUNT RECEPTACLES AT 6'–8" AFF TO BOTTOM OF RECEPTACLE BOX. COORDINATE EXACT LOCATION OF EACH PARTICULAR RECEPTACLE WITH OWNER AND USER PRIOR TO INSTALLATION.

3 SUSPENDED RECEPTACLE
E404 SCALE: NOT TO SCALE

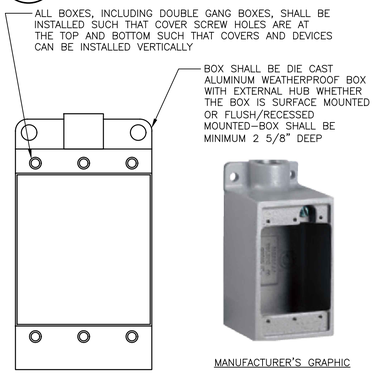

MANUFACTURER'S GRAPHIC

NOTE: A SINGLE GANG BOX IS SHOWN HOWEVER THERE ARE LOCATIONS WHERE A DOUBLE GANG BOX WILL BE REQUIRED.

BOX INSTALLED IN ANIMAL RESEARCH FACILITY ('ARF') AREA

NOTES

1– ALL BOXES INSTALLED IN THE ANIMAL RESEARCH FACILITY ('ARF') AREA IN THE WALL OR CEILING SHALL BE CAST ALUMINUM BOXES WITH EXTERNAL HUB INCLUDING BUT NOT LIMITED TO BOXES FOR EXIT LIGHTS AND ANY OTHER SURFACE LIGHT FIXTURE, RECEPTACLES, SWITCHES, FIRE ALARM DEVICES, TELECOM OUTLETS, SECURITY/SURVEILLANCE OUTLETS, OCCUPANCY SENSORS, TELEMETRY OUTLETS, GROUNDING OUTLETS OR ANY OTHER BOX FOR A DEVICE, FIXTURE OR OUTLET. ALL BOXES SHALL BE FLUSH/RECESSED UNLESS NOTED OTHERWISE. SEE E205 FOR THE 'ARF' AREA.

2– IT IS CRITICAL WHERE BOXES ARE FLUSH/RECESS MOUNTED IN THE WALL OR THE CEILING TO ENSURE THE FRONT OF THE BOX IS MOUNTED EVEN WITH THE PLANE OF THE FINISHED SURFACE WITHOUT PROTRUDING FROM THE SURFACE BECAUSE MANY OF THE COVERS USED WILL BE WEATHERPROOF COVERS AND THEY WILL NEED TO MOUNT SECURELY TO THE FACE OF THE BOX, AND SHOULD NOT BE RECESSED INTO THE WALL. THE COVER SHALL ALSO NOT PROTRUDE FROM THE FINISHED SURFACE THEREFORE THE BOX SHOULD NOT PROTRUDE FROM THE PLANE OF THE FINISHED SURFACE. PLACEMENT AND RETAINING THE BOX IN THE PROPER LOCATION DURING MORTAR SETUP IS CRITICAL IN THIS PROCESS.

2– IT IS CRITICAL WHERE BOXES ARE FLUSH/RECESS MOUNTED THAT THE FINISH (GYP BOARD/JOINT COMPOUND OR CMU/MASONRY) EXTEND NEATLY AND TIGHT TO THE BOX PERIMETER AS THE WEATHERPROOF COVERS DO NOT OVERLAP THE EDGE OF THE BOX, AND ANY GAP BETWEEN THE BOX AND FINISH SURFACE WILL BE EXPOSED IF NOT FINISHED PROPERLY. COORDINATE THIS INSTALLATION CAREFULLY WITH THE GENERAL CONTRACTOR TO ENSURE A NEAT AND WORKMANLIKE FINISH AROUND THE BOX.

3– WHERE BOX IS FLUSH/RECESSED IN MASONRY THE BOX AND CONDUIT FEED SHALL BE MORTARED IN OR SOME OTHER METHOD TO ENSURE THE BOX DOES NOT SHIFT OR MOVE DURING OR AFTER INSTALLATION.

4 SPECIAL BOX APPLICATIONS
E404 SCALE: NOT TO SCALE

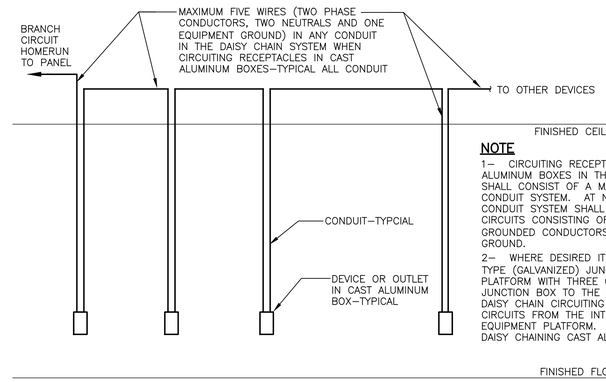

NOTE

1– CIRCUITING RECEPTACLES OR OUTLETS IN CAST ALUMINUM BOXES IN THE DAISY CHAIN FORMAT AS SHOWN SHALL CONSIST OF A MAXIMUM OF TWO CIRCUITS IN THE CONDUIT SYSTEM. AT NO POINT IN THE HOMERUN OR CONDUIT SYSTEM SHALL THERE BE MORE THAN TWO CIRCUITS CONSISTING OF TWO PHASE CONDUCTORS, TWO GROUNDED CONDUCTORS (NEUTRALS) AND ONE EQUIPMENT GROUND.

2– WHERE DESIRED IT IS ALLOWED TO HAVE AN INTERIOR TYPE (GALVANIZED) JUNCTION BOX AT THE EQUIPMENT PLATFORM WITH THREE CIRCUITS HOMERUN FROM THAT JUNCTION BOX TO THE PANEL, AND FEED DOWN TO THE DAISY CHAIN CIRCUITING AS SHOWN WITH MAXIMUM TWO CIRCUITS FROM THE INTERIOR JUNCTION BOX AT THE EQUIPMENT PLATFORM. THE INTENT IS TO LIMIT WIRES DAISY CHAINING CAST ALUMINUM BOXES TO FIVE WIRES.

DAISY CHAIN BRANCH CIRCUITING

5 CIRCUITING RECEPTACLES/OUTLETS IN CAST ALUMINUM BOXES
E404 NOT TO SCALE

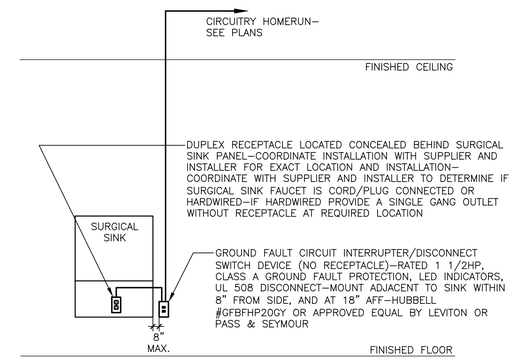

6 OUTLET FOR ELECTRONIC LAVATORY FAUCET AT SURGICAL SINK
E404 SCALE: NOT TO SCALE

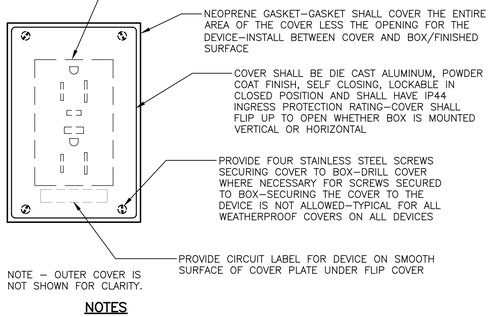

NOTE – OUTER COVER IS NOT SHOWN FOR CLARITY.

NOTES

1– WEATHERPROOF COVERS SHALL MOUNT TO BOX WITH FOUR STAINLESS STEEL SCREWS.

2– ALL COVERS OUTSIDE SHALL BE WHILE–IN–USE COVERS.

3– ALL COVERS INSIDE SHALL BE NOT WHILE–IN–USE COVER UNO.

WHILE–IN–USE COVER
USE ONLY AT SPECIFIC LOCATIONS FOR ELECTRONIC LAVATORY FAUCET AND AS SPECIFIED

NOT A WHILE–IN–USE COVER
USE AT TYPICAL INDOOR LOCATIONS UNO

EXAMPLE OF ACCEPTABLE COVER TYPE

7 WEATHERPROOF DEVICES AND COVERS
E404 SCALE: NOT TO SCALE

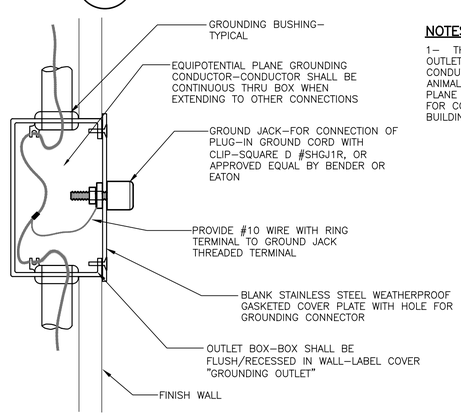

GROUNDING OUTLET TYPE 'GA'

NOTES

1– THE EQUIPOTENTIAL PLANE GROUNDING OUTLET IS FOR THE PURPOSE OF CONNECTING CONDUCTIVE METALLIC EQUIPMENT WITHIN THE ANIMAL AREA TO THE GROUNDED EQUIPOTENTIAL PLANE BY THE CONTRACTOR AND THE OWNER FOR COMPLIANCE WITH NEC 547–AGRICULTURAL BUILDINGS.

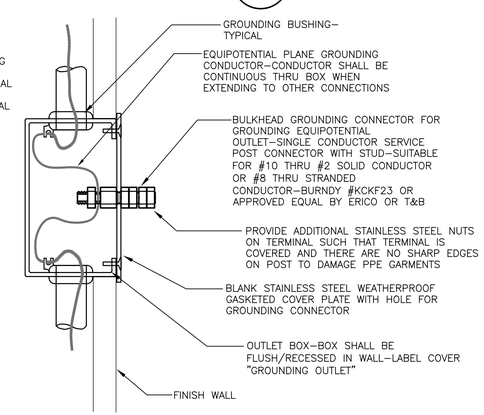

GROUNDING OUTLET TYPE 'GB'

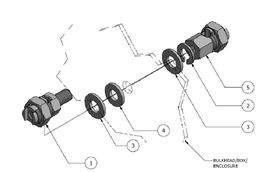

BULKHEAD GROUNDING CONNECTOR PARTS

1. MALE MECHANICAL CONNECTOR POST
2. STAINLESS STEEL SPLIT LOCK WASHER
3. STAINLESS STEEL FLAT WASHER
4. NEOPRENE SEALING WASHER
5. FEMALE MECHANICAL CONNECTOR POST

8 EQUIPOTENTIAL PLANE GROUNDING OUTLET
E404 SCALE: NOT TO SCALE

Wagner Architecture, pllc
92 ELAM COURT
NEW HILL, NORTH CAROLINA 27562
TEL. (919) 612.5050

Kramer Engineering Services, pllc
5517 Cascade Dr, Chapel Hill, NC 27514
TEL (919)933-3350
email: donna@kespllc.com
Firm license: P-1099

bennett&pless
formerly LHC STRUCTURAL ENGINEERS
5430 Wade Park Blvd, Suite 400
Raleigh, NC 27607
Tel 919 832 5587

Copyright 2022 • Bennett & Pless, Inc.
All Rights Reserved

B & P Job Number 22.08.048

NV5 ENGINEERS AND CONSULTANTS, INC.
3300 REGENCY PARKWAY, STE 100
CARY, NC 27518
P: 919.851.1912 www.NV5.com
NC License # F-1333
formerly CALYX Engineers • Consultants

NORTH CAROLINA PROFESSIONAL ENGINEER SEAL 14917 5/18/2023 DONNA D. KRAMER

PREPARED FOR
NORTH CAROLINA STATE UNIVERSITY
COLLEGE OF VETERINARY MEDICINE

TRUE NORTH
PLAN NORTH

TRANSLATIONAL RESEARCH FACILITY

revisions

building number

cadd file number

drawn by JEY

checked by DDK

date ISSUED FOR CONSTRUCTION 05/18/2023

project number NCSU CODE: 42124
ITEM: 305
WA 202207
SCO#: 21–24030–01A

DETAILS

sheet number: E404

revision number:

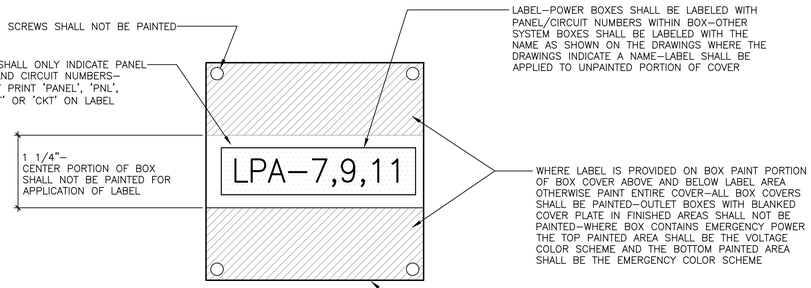

CONTROL PANELS

PROVIDE SIMILAR LABEL ON THE DOOR OF ALL CONTROL PANELS/CABINETS, POWER SUPPLIES, AND OTHER EQUIPMENT, INCLUDING THE SAME PROVIDED BY OTHER CONTRACTORS AND THE OWNER.

NOTES

1– LABEL SHALL BE MADE ON TAPE WITH THERMAL TRANSFER AND INK RIBBON TYPE PROCESS.

2– LABELS ON JUNCTION, PULL OR OTHER BOXES, AND CONTROL PANELS SHALL BE WHITE 1" TAPE WITH 1/2" BLACK TEXT.

3– LABELS ON RECEPTACLES, SWITCHES AND OTHER DEVICE COVER PLATES SHALL BE 1/4" CLEAR TAPE WITH 1/8" BLACK TEXT.

PAINT COLOR SCHEME

BLUE (DARK BLUE)	120/208V EQUIPMENT
BLACK	277/480V EQUIPMENT
BRIGHT RED	FIRE ALARM EQUIPMENT
DARK RED (BURGUNDY)	SECURITY EQUIPMENT (INCLUDING ACCESS CONTROL, SURVEILLANCE)
GREEN	EMERGENCY POWER EQUIPMENT
ORANGE	TELEPHONE EQUIPMENT
BROWN	DATA EQUIPMENT
PURPLE	TELEVISION EQUIPMENT
CYAN	BAS/CONTROLS EQUIPMENT
YELLOW	LIGHTING CONTROL EQUIPMENT
WHITE	PAGING EQUIPMENT

1 JUNCTION AND PULL BOX PAINTING AND LABELING, AND CONTROL PANEL LABELING

E405 SCALE: NOT TO SCALE

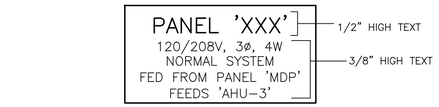

LABEL AT PANEL 'XXX'

EXAMPLE LABEL

NOTES

1. PROVIDE PHENOLIC LABEL ON ALL PANELS, DISCONNECTS, ENCLOSED BREAKERS, MOTOR CONTROL CENTERS, AND OTHER DISTRIBUTION EQUIPMENT. FURNISH LABELS TO THE MECHANICAL CONTRACTOR SIMILAR TO THE ABOVE FOR VFD'S FOR INSTALLATION BY THE MECHANICAL CONTRACTOR.

2. LABEL SHALL INDICATE PANEL/EQUIPMENT NAME, VOLTAGE/PHASE/WIRE, SYSTEM BRANCH/DESIGNATION AS DEFINED BY NEC (NORMAL, EMERGENCY, STANDBY, OPTIONAL STANDBY, LIFE SAFETY, CRITICAL, EQUIPMENT, ETC.), AND SOURCE OF FEED TO PANEL/EQUIPMENT. LABELS FOR DISCONNECTS, ENCLOSED BREAKERS AND OTHER INDIVIDUAL DEVICES SHALL INCLUDE THE NAME OF EQUIPMENT WHICH IT FEEDS.

3. LABELS SHALL BE ENGRAVED PHENOLIC LABELS WITH COLOR SCHEME PER SPECIFICATIONS, OR WHERE INSTALLED AT AN EXISTING FACILITY THE COLOR SCHEME SHALL MATCH EXISTING ELECTRICAL DISTRIBUTION COLOR SCHEME (COORDINATE WITH OWNER). LETTERING SHALL BE CLEARLY LEGIBLE AND LETTERS SHALL NOT BE CONDENSED HORIZONTALLY TO THE POINT THE LETTERS TOUCH.

4. PROVIDE SIMILAR LABEL ON MOTOR CONTROL CENTER BUCKETS INDICATING LOAD AND HORSEPOWER. LABEL ON BUCKETS SHALL BE 3/8" HIGH.

2 PANEL AND EQUIPMENT LABELING

E405 SCALE: NOT TO SCALE

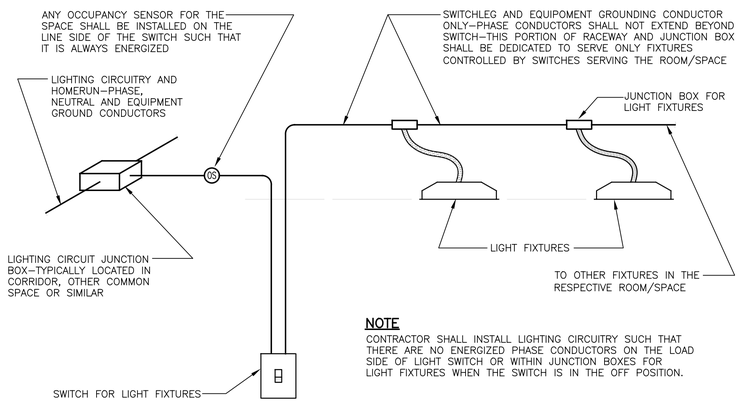

NOTE

CONTRACTOR SHALL INSTALL LIGHTING CIRCUITRY SUCH THAT THERE ARE NO ENERGIZED PHASE CONDUCTORS ON THE LOAD SIDE OF LIGHT SWITCH OR WITHIN JUNCTION BOXES FOR LIGHT FIXTURES WHEN THE SWITCH IS IN THE OFF POSITION.

3 LIGHTING HOMERUN AND SWITCHLEG CIRCUITRY

E405 SCALE: NOT TO SCALE

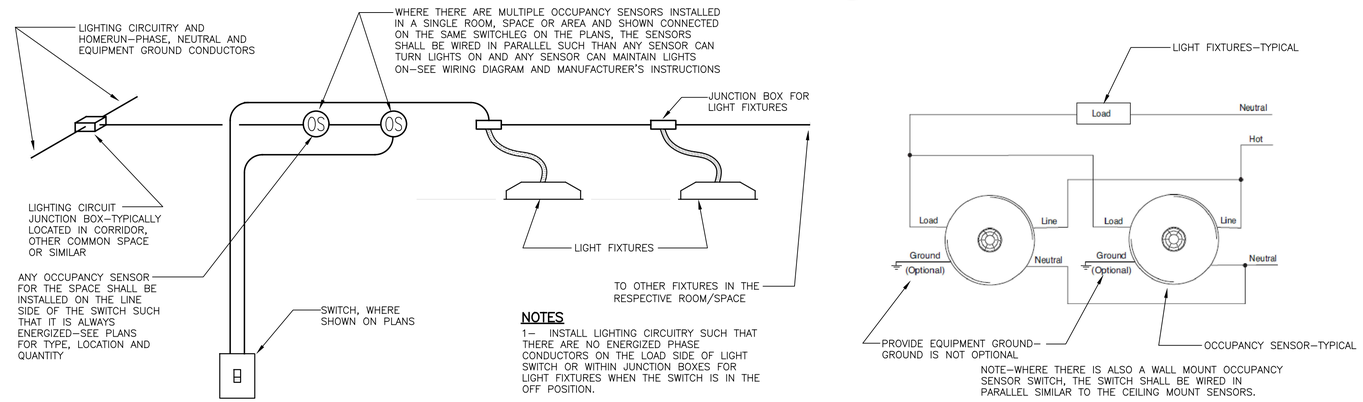

NOTES

1– INSTALL LIGHTING CIRCUITRY SUCH THAT THERE ARE NO ENERGIZED PHASE CONDUCTORS ON THE LOAD SIDE OF LIGHT SWITCH OR WITHIN JUNCTION BOXES FOR LIGHT FIXTURES WHEN THE SWITCH IS IN THE OFF POSITION.

NOTE–WHERE THERE IS ALSO A WALL MOUNT OCCUPANCY SENSOR SWITCH, THE SWITCH SHALL BE WIRED IN PARALLEL SIMILAR TO THE CEILING MOUNT SENSORS.

WIRING DIAGRAM – MULTIPLE SENSORS INSTALLED IN PARALLEL

4 LIGHTING OCCUPANCY SENSOR DETAIL – LINE VOLTAGE TYPE

E405 SCALE: NOT TO SCALE

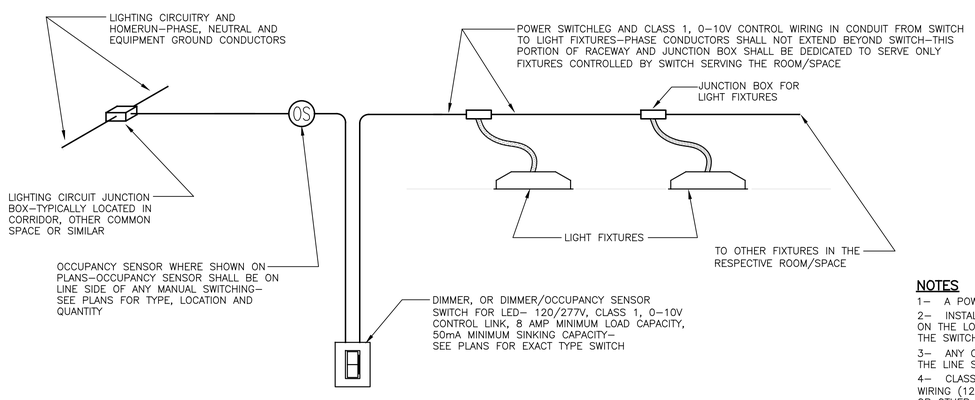

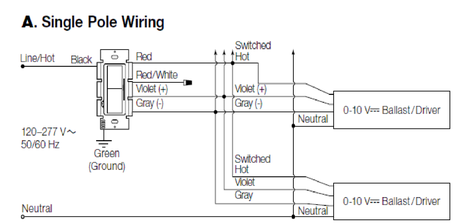

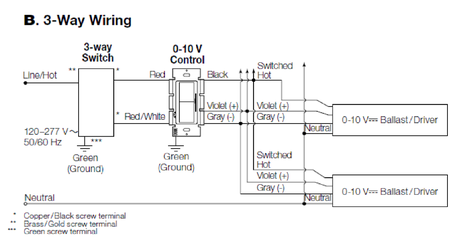

WIRING DIAGRAM

NOTES

1– A POWER PACK IS NOT REQUIRED AND A POWER PACK SHALL NOT BE INSTALLED.

2– INSTALL LIGHTING CIRCUITRY SUCH THAT THERE ARE NO ENERGIZED PHASE CONDUCTORS ON THE LOAD SIDE OF LIGHT SWITCH OR WITHIN JUNCTION BOXES FOR LIGHT FIXTURES WHEN THE SWITCH IS IN THE OFF POSITION.

3– ANY OCCUPANCY SENSORS (SEPARATE FROM THE WALL SWITCH) SHALL BE INSTALLED ON THE LINE SIDE OF THE SWITCH. THESE OCCUPANCY SENSORS SHALL ALWAYS BE POWERED ON.

4– CLASS 1, 0–10V DIMMING CONTROL WIRING INSTALLED IN THE SAME CONDUIT WITH POWER WIRING (120V OR 277V CIRCUIT) SHALL BE #18 GAUGE SHIELDED PAIR WITH 'TFFN' INSULATION OR OTHER CONDUCTORS PER NEC 725.49. DIMMING CONTROL WIRING INSTALLED IN SEPARATE CONDUIT MAY BE ANY CONDUCTOR PER NEC 725.49 IN A 1/2" CONDUIT. ALL CLASS 1 DIMMING CONTROL WIRING SHALL BE INSTALLED IN CONDUIT.

5 DIMMER SWITCH FOR LED – LINE VOLTAGE, 0–10V CLASS 1 CONTROLS

E405 SCALE: NOT TO SCALE

Wagner Architecture, pllc
92 ELAM COURT
NEW HILL, NORTH CAROLINA 27562
TEL. (919) 612.5050

Kramer Engineering Services, pllc
5517 Cascade Dr. Chapel Hill, NC 27514
TEL (919)933-3350
email: donna@kesplic.com
Firm license: P-1099

bennett&pless
formerly LHC STRUCTURAL ENGINEERS
5430 Wade Park Blvd, Suite 400
Raleigh, NC 27607
Tel 919 832 5587

Copyright 2022 • Bennett & Pless, Inc.
All Rights Reserved

B & P Job Number 22.08.048

NV5 ENGINEERS AND CONSULTANTS, INC.
3300 REGENCY PARKWAY, STE 100
CARY, NC 27518
P: 919.851.1912 www.NV5.com
NC License # F-1333
formerly CALYX Engineers + Consultants

NORTH CAROLINA PROFESSIONAL ENGINEER SEAL 14917 5/18/2023 DONNA D. KRAMER

PREPARED FOR
NORTH CAROLINA STATE UNIVERSITY
COLLEGE OF VETERINARY MEDICINE

TRUE NORTH
PLAN NORTH

TRANSLATIONAL RESEARCH FACILITY

revisions

building number

cadd file number

drawn by JEY

checked by DDK

date ISSUED FOR CONSTRUCTION 05/18/2023

project number NCSU CODE: 42124 ITEM: 305 WA 202207 SCO#: 21–24030–01A

DETAILS

sheet number E405

revision number

NOTE:

1– CONDUIT SEALING IS REQUIRED AT ALL CONDUIT TERMINATION POINTS TO OUTLETS AND EQUIPMENT LOCATED WITHIN THE ARF AREA. THIS INCLUDES BUT IS NOT LIMITED TO PANELS, DISCONNECTS, CONTROL PANELS, RECEPTACLES, SWITCHES, JUNCTION OR OUTLET BOXES, OUTLETS TO WHICH LIGHT FIXTURES ARE MOUNTED, OCCUPANCY SENSORS, FIRE ALARM DEVICES, AND SECURITY CAMERA OUTLETS. SEALING IS NOT REQUIRED FOR BOXES LOCATED ENTIRELY ABOVE FINISHED CEILING HOWEVER SEALING IS REQUIRED FOR BOXES INSTALLED FLUSH/RECESSED IN THE CEILING OR WALL, AND/OR SURFACE MOUNTED TO THE CEILING OR WALL. SEALING IS NOT REQUIRED IN MECHANICAL ROOMS OR ELECTRICAL ROOMS. SEE SPECIFICATIONS FOR SEALANT TYPE.

2– COORDINATE WITH ALL PARTIES INSTALLING WIRE AND CABLE, INCLUDING BUT NOT LIMITED TO FIRE ALARM, SECURITY/SURVEILLANCE, TELECOM, TELEMETRY AND OTHERS, AND PROVIDE SEALANT AFTER ALL WIRE AND CABLE HAS BEEN INSTALLED.

3– WHERE THERE IS EMPTY CONDUIT AT THE TIME OF BUILDING OCCUPANCY THE CONTRACTOR SHALL PROVIDE A LENGTH OF #12 WIRE COILED TO FILL THE DIAMETER OF THE CONDUIT 3" INTO THE CONDUIT AND THEN SEAL THE CONDUIT. THIS WILL AID IN REMOVAL OF THE SEALANT UPON INSTALLATION OF THE FUTURE WIRE.

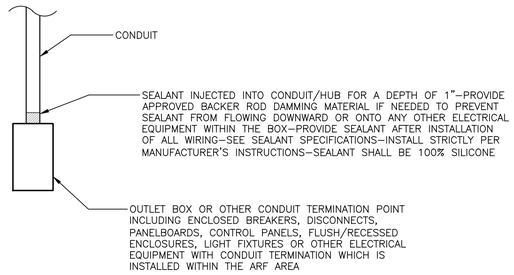

1 / E406 CONDUIT SEALING AT CONDUIT TERMINATION POINT IN ANIMAL RESEARCH FACILITY (ARF) AREA

NOT TO SCALE

NOTES

1– ALL DEVICES, BOXES, ENCLOSURES AND EQUIPMENT IN THE 'ARF' AREA SHALL BE SEALED WHERE IT MAKES CONTACT WITH THE WALL OR CEILING SURFACE, AND WHERE IT IS SPACED OFF THE WALL 5/16" OR LESS UNLESS NOTED OTHERWISE. THERE SHALL BE NO GAPS BETWEEN WALL OR CEILING SURFACES AND EQUIPMENT 5/16" OR LESS.

2– VERIFY WITH OWNER IF FIRE ALARM DEVICES/COVERS ARE ALLOWED TO BE SEALED TO THE FINISH SURFACE HOWEVER THE BASEPLATE OF ANY FIRE ALARM DEVICE SHALL BE SEALED.

3– THE SEALANT SHALL BE AS INDICATED IN THE SPECIFICATIONS. SEALANT COLOR SHALL BE WHITE.

ENCLOSURE NOTES

1– FLUSH/RECESSED ENCLOSURES AND HOUSINGS IN THE 'ARF' AREA WHICH ARE NOT ENVIRONMENTALLY SEALED, INCLUDING BUT NOT LIMITED TO PANEL 'IP' PANEL ENCLOSURE AND RECESSED EMERGENCY LIGHT FIXTURES 'E3' AND 'E4', SHALL BE COMPLETELY SEALED AT SEAMS, AT UNUSED KNOCKOUTS, CORNERS AND ANY OPENINGS HOWEVER SMALL WITHIN THE ENCLOSURE. THE PERIMETER OF THE ENCLOSURE AT THE WALL/CEILING FINISH SHALL BE COMPLETELY SEALED.

2– NOTE THAT LIGHT FIXTURE SERIES 'B', 'C' AND 'D' ARE FABRICATED AS ENVIRONMENTALLY SEALED.

3– THE SEALANT SHALL BE 100% SILICONE AS INDICATED IN THE SPECIFICATIONS. SEALANT COLOR SHALL BE WHITE.

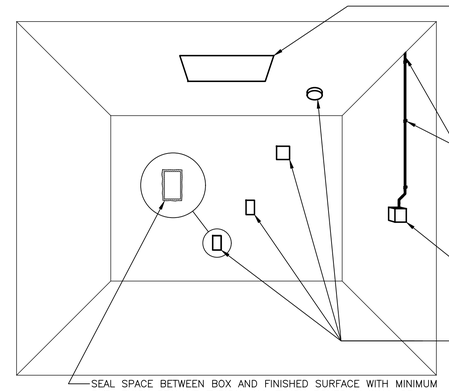

2 / E406 SEALING DEVICES AND EQUIPMENT IN THE ANIMAL RESEARCH FACILITY (ARF) AREA

SCALE: NOT TO SCALE

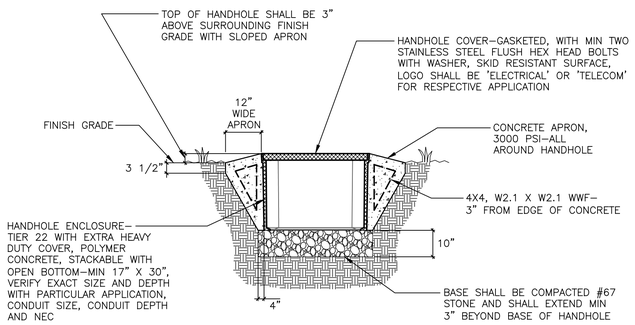

MANUFACTURER'S GRAPHIC

NOTE

CONCRETE AND REINFORCING MATERIALS AND INSTALLATION SHALL MEET THE REQUIREMENTS OF SPEC SECTIONS 03 3000, 05 1200 AND 05 3100.

3 / E406 HANDHOLE

SCALE: NOT TO SCALE

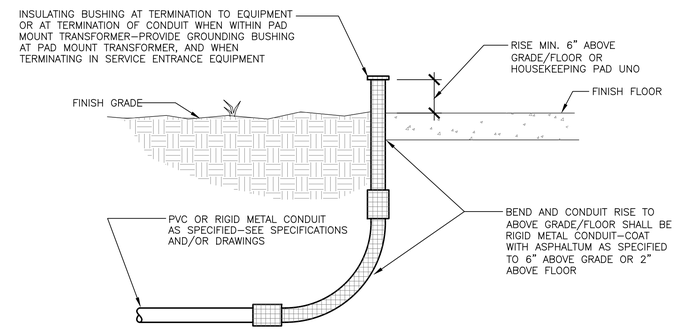

4 / E406 UNDERGROUND CONDUIT AND CONDUIT RISE TO ABOVE GRADE/FLOOR

SCALE: NOT TO SCALE

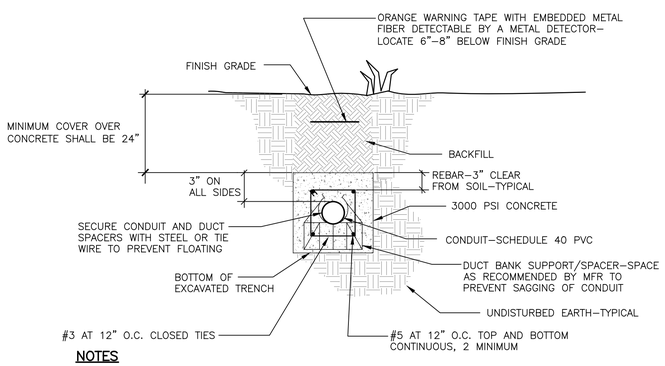

NOTES

1– CONCRETE AND REINFORCING MATERIALS AND INSTALLATION SHALL MEET THE REQUIREMENTS OF SPEC SECTIONS 03 3000, 05 1200 AND 05 3100.

2– STRUCTURAL STEEL REINFORCING IN DUCT BANK IS REQUIRED UNDER ROADWAY (PAVED, GRAVEL, DIRT, ETC). STEEL REINFORCING SHALL EXTEND MINIMUM 10' BEYOND EDGE OF ROADWAY. SEE SITE PLANS FOR ROADWAY.

3– STRUCTURAL STEEL REINFORCING IN DUCT BANK IS REQUIRED WITHIN 10' OF MANHOLES AND BUILDING. STEEL REINFORCING SHALL BE TIED TO THE WALL STEEL REINFORCING IN MANHOLE AND BUILDING.

4– SEE SPECIFICATIONS FOR REQUIRED SLEEVE THROUGH FOUNDATION WALL.

5 / E406 CONCRETE DUCT BANK – ELECTRICAL POWER

NOT TO SCALE

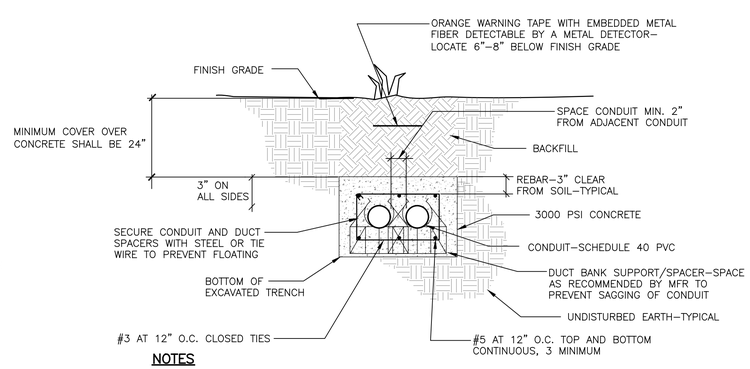

NOTES

1– CONCRETE AND REINFORCING MATERIALS AND INSTALLATION SHALL MEET THE REQUIREMENTS OF SPEC SECTIONS 03 3000, 05 1200 AND 05 3100.

2– STRUCTURAL STEEL REINFORCING IN DUCT BANK IS REQUIRED UNDER ROADWAY (PAVED, GRAVEL, DIRT, ETC). STEEL REINFORCING SHALL EXTEND MINIMUM 10' BEYOND EDGE OF ROADWAY. SEE SITE PLANS FOR ROADWAY.

3– STRUCTURAL STEEL REINFORCING IN DUCT BANK IS REQUIRED WITHIN 10' OF MANHOLES AND BUILDING. STEEL REINFORCING SHALL BE TIED TO THE WALL STEEL REINFORCING IN MANHOLE AND BUILDING.

4– SEE SPECIFICATIONS FOR REQUIRED SLEEVE THROUGH FOUNDATION WALL.

6 / E406 CONCRETE DUCT BANK – TELECOM

NOT TO SCALE

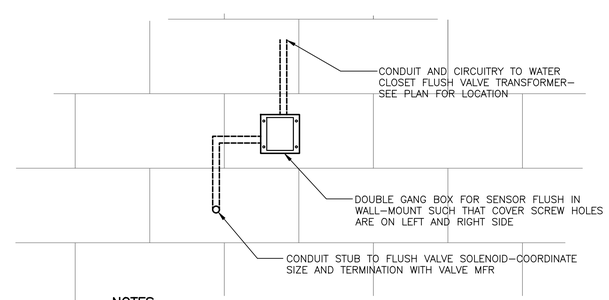

NOTES

1– COORDINATE EXACT LOCATION AND ORIENTATION OF SENSOR OUTLET AND SOLENOID VALVE STUB OUT WITH PLUMBING CONTRACTOR AND INSTALLATION INSTRUCTIONS FOR FLUSH VALVE.

2– PROVIDE ALL BOXES, CONDUIT AND WIRING FOR THE FINAL INSTALLATION.

3– COORDINATE WITH MANUFACTURER'S INSTALLATION INSTRUCTIONS AND SENSOR COVER TO ENSURE DOUBLE GANG CAST ALUMINUM BOX WILL MEET INSTALLATION REQUIREMENTS.

4– IT IS CRITICAL THAT THE EXACT LOCATIONS, MOUNTING HEIGHTS, ORIENTATION AND COMPLETE INSTALLATION MEET THE REQUIREMENTS AND INSTALLATION INSTRUCTIONS OF THE PARTICULAR FLUSH VALVE BEING INSTALLED. COORDINATE CAREFULLY WITH PLUMBING CONTRACTOR AND FOLLOW FLUSH VALVE INSTALLATION INSTRUCTIONS.

FINISHED FLOOR

7 / E406 WATER CLOSET FLUSH VALVE OUTLETS

SCALE: NOT TO SCALE

Wagner Architecture, pllc
92 ELAM COURT
NEW HILL, NORTH CAROLINA 27562
TEL. (919) 612.5050

Kramer Engineering Services, pllc
5517 Cascade Dr. Chapel Hill, NC 27514
TEL (919)933-3350
email: donna@kespllc.com
Firm license: P-1099

bennett&pless
formerly LHC STRUCTURAL ENGINEERS
5430 Wade Park Blvd, Suite 400
Raleigh, NC 27607
Tel 919 832 5587

Copyright 2022 • Bennett & Pless, Inc.
All Rights Reserved

B & P Job Number 22.08.048

NV5 ENGINEERS AND CONSULTANTS, INC.
3300 REGENCY PARKWAY, STE 100
CARY, NC 27518
P: 919.851.1912 www.NV5.com
NC License # F-1333
formerly CALYX Engineers + Consultants

NORTH CAROLINA PROFESSIONAL ENGINEER SEAL 14917 5/18/2023 DONNA D. KRAMER

PREPARED FOR
NORTH CAROLINA STATE UNIVERSITY
COLLEGE OF VETERINARY MEDICINE

TRUE NORTH
PLAN NORTH

TRANSLATIONAL RESEARCH FACILITY

revisions

building number

cadd file number

drawn by JEY

checked by DDK

date ISSUED FOR CONSTRUCTION 05/18/2023

project number NCSU CODE: 42124
ITEM: 305
WA 202207
SCO#: 21–24030–01A

DETAILS

sheet number: E406

revision number:

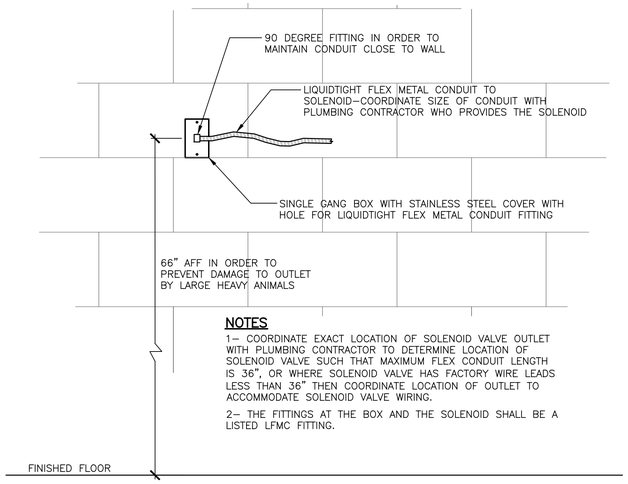

NOTES

1– COORDINATE EXACT LOCATION OF SOLENOID VALVE OUTLET WITH PLUMBING CONTRACTOR TO DETERMINE LOCATION OF SOLENOID VALVE SUCH THAT MAXIMUM FLEX CONDUIT LENGTH IS 36", OR WHERE SOLENOID VALVE HAS FACTORY WIRE LEADS LESS THAN 36" THEN COORDINATE LOCATION OF OUTLET TO ACCOMMODATE SOLENOID VALVE WIRING.

2– THE FITTINGS AT THE BOX AND THE SOLENOID SHALL BE A LISTED LFMC FITTING.

1 ANIMAL WATER FLUSH SOLENOID VALVE OUTLET
E407 SCALE: NOT TO SCALE

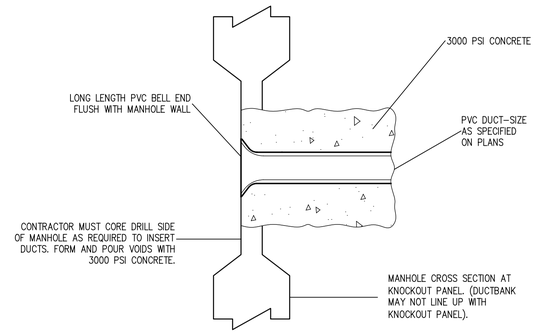

2 TELECOM MANHOLE ENTRANCE DETAIL
E407 SCALE: NOT TO SCALE

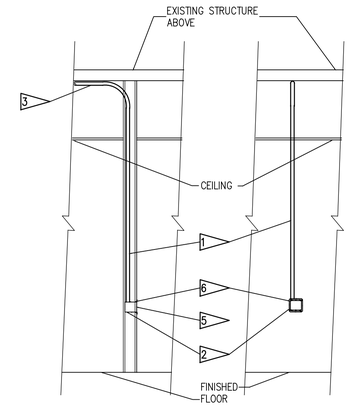

KEY NOTES

1. 1" CONDUIT INSIDE WALLS.
2. 4" SQUARE BOX, 2 1/8" DEEP WITH 1" K.O.'S, STEEL. BOX MUST BE MOUNTED LEVEL AND PERPENDICULAR TO WALL, AS THE FACEPLATE MOUNTING "CANNOT" BE ADJUSTED TO COMPENSATE.
3. 1" CONDUIT TO 'TELECOM PULL BOX', ROUTE ABOVE CEILING AT STRUCTURE. SUPPORT AS REQUIRED.
4. N/A
5. SQUARE CORNERED TILE WALL COVER (PLASTER RING) FOR 4" SQUARE BOX, DOUBLE DEVICE CAPACITY.
6. THE FRONT SURFACE OF THE BOX IS TO SET BACK NO MORE THAN 1/8" FROM THE SURFACE OF THE WALL PLANE. THE GAP BETWEEN THE WALL PLANE AND THE BOX IS NOT TO EXCEED 1/8".

NOTES

1. CEILING HEIGHT MAY VARY FROM ROOM TO ROOM.
2. USE COMPRESSION COUPLINGS AND CONNECTORS FOR EMT CONDUIT.
3. ALL BOXES AND PLASTER RINGS TO BE MOUNTED SUCH THAT SCREW HOLES ARE AT TOP AND BOTTOM OF BOX IN ORDER FOR FACEPLATES TO BE MOUNTED VERTICALLY.
4. NO MORE THAN TWO (2) 90° DEGREE TURNS SHALL EXIST BETWEEN BOXES OR BETWEEN JUNCTION BOXES AND END OF CONDUIT. NO "LB" TYPE JOINTS WILL BE ALLOWED.

3 TELECOM OUTLET NOT IN 'ARF' AREA
E407 SCALE: NOT TO SCALE

NOTE – 'ARF' AREA

TELECOM OUTLET IN 'ARF' AREA IS SIMILAR EXCEPT BOX SHALL BE DIE CAST ALUMINUM WITH EXTERNAL HUB.

NOTE: COORDINATE EXACT CONFIGURATION AND SIZE WITH OWNER AND NCSU OIT COMTECH WHEN OWNER FURNISHES TELECOM CABINET PRIOR TO CONSTRUCTION OF SUPPORT SYSTEM.

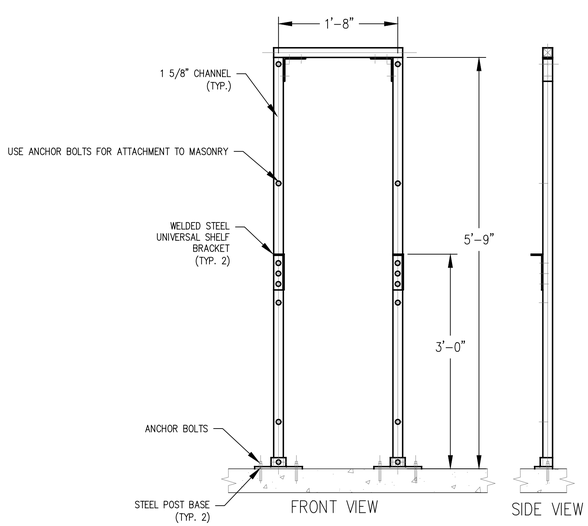

CABINET SUPPORT FRAME

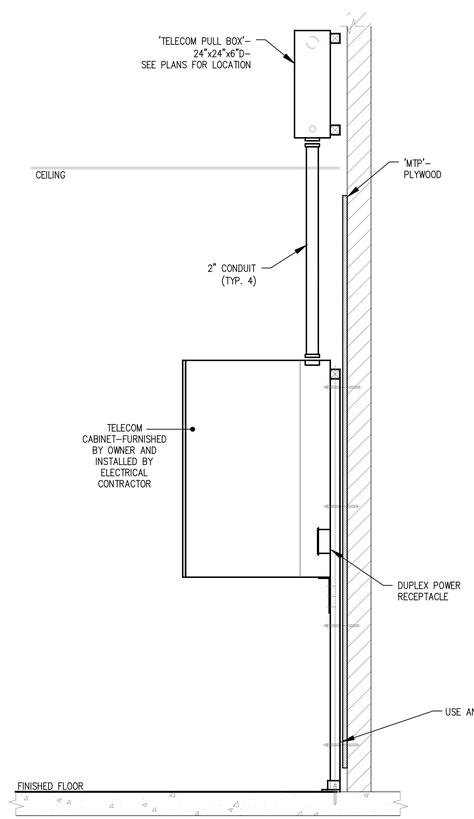

SECTION "A" – "A"

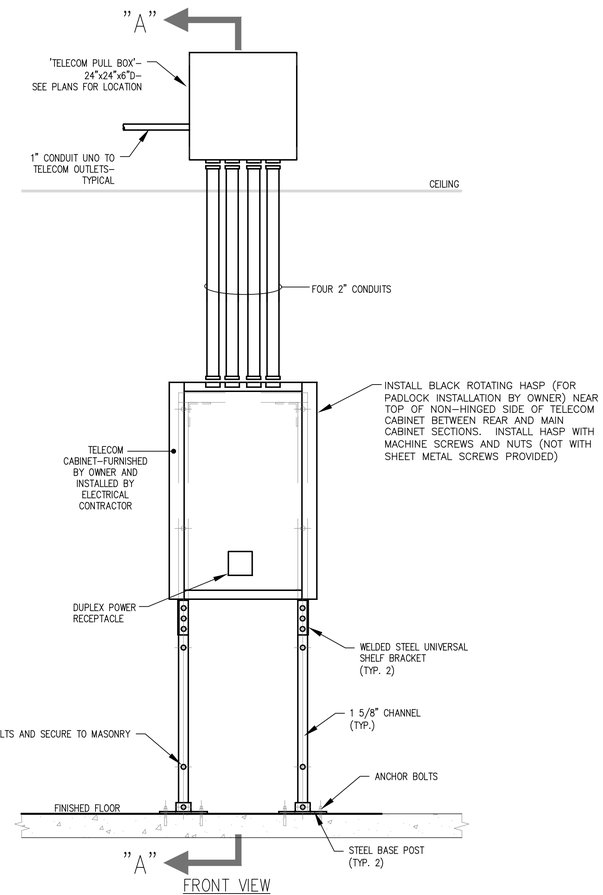

4 TELECOM CABINET INSTALLATION DETAIL
E407 NOT TO SCALE

Wagner Architecture, pllc
92 ELAM COURT
NEW HILL, NORTH CAROLINA 27562
TEL. (919) 612.5050

Kramer Engineering Services, pllc
5517 Cascade Dr, Chapel Hill, NC 27514
TEL (919)933-3350
email: donna@kesplic.com
Firm license: P-1099

bennett&pless
formerly LHC STRUCTURAL ENGINEERS
5430 Wade Park Blvd, Suite 400
Raleigh, NC 27607
Tel 919 832 5587

Copyright 2022 • Bennett & Pless, Inc.
All Rights Reserved

B & P Job Number 22.08.048

NV5 ENGINEERS AND CONSULTANTS, INC.
3300 REGENCY PARKWAY, STE 100
CARY, NC 27518
P: 919.851.1912 www.NV5.com
NC License #F-1333
formerly CALYX Engineers + Consultants

NORTH CAROLINA PROFESSIONAL ENGINEER SEAL 14917 5/18/2023 DONNA D. KRAMER

PREPARED FOR
NORTH CAROLINA STATE UNIVERSITY
COLLEGE OF VETERINARY MEDICINE

TRUE NORTH
PLAN NORTH

TRANSLATIONAL RESEARCH FACILITY

revisions

building number

cadd file number

drawn by JEY

checked by DDK

date ISSUED FOR CONSTRUCTION 05/18/2023

project number
NCSU CODE: 42124
ITEM: 305
WA 202207
SCO#: 21–24030–01A

DETAILS

sheet number: E407

revision number: