LAKE MYRA COUNTY PARK
PARK CENTER
Wake County, North Carolina
JULY 27, 2026 – CONSTRUCTION DOCUMENT SET

SITE DATA

NAME:	LAKE MYRA COUNTY PARK	
OWNER:	WAKE COUNTY	
DEVELOPER:	WAKE COUNTY	
CONTACT:	ERIC STAEHLE PLA, ASLA, SENIOR FACILITIES PROJECT MANAGER	
ADDRESS:	WAKE COUNTY OFFICE BUILDING, 11th FLOOR, RALEIGH, NC 27602	
PHONE NUMBER:	919.856.6369	
	WESTERN PARCEL:	EASTERN PARCEL:
PROPERTY ADDRESS:	0 S SMITHFIELD ROAD	10505 POOLE ROAD
PARCEL ID NUMBER (PIN):	1763-51-9788	1763-84-1077
DEED BOOK AND PAGE:	DB: 12448, PG: 2075	DB: 12590, PG: 1251
ZONING DISTRICT:	WAKE COUNTY, ZONED R-40	WENDELL, ZONED R3
TOTAL LAND AREA:	91.81 ACRES	125.76 ACRES
PROPOSED DISTURBED AREA:	6.5 ACRES	12 ACRES
CURRENT USE:	UNDEVELOPED	UNDEVELOPED
PROPOSED USE:	PARK/RECREATION FACILITY	PARK/RECREATION FACILITY
EXISTING IMPERVIOUS AREA:		
PROPOSED IMPERVIOUS AREA:		
PROPOSED BUILDING:		
FLOOD INFORMATION:		
WATER AND SEWER SERVICE:		
ELECTRICAL SERVICE:		

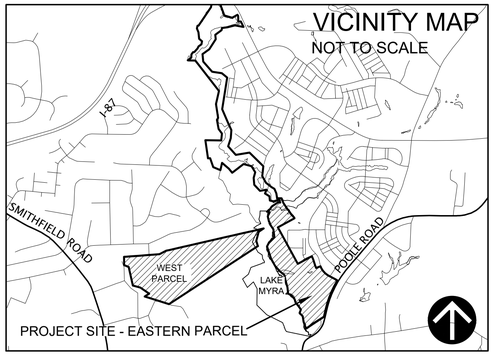

SHEET INDEX

COVER SHEET

ARCHITECTURE
PC-G001 – ABBREVIATIONS, SYMBOLS, AND GENERAL NOTES
PC-G101 – CODE SUMMARY
PC-G102 – LIFE SAFETY PLAN
PC-G103 – UL DETAILS
PC-G104 – UL DETAILS
PC-G105 – UL DETAILS
PC-G106 – UL DETAILS
PC-A000 – 3D VIEWS
PC-A001 – PARTITIONS
PC-A101 – FIRST FLOOR PLAN
PC-A102 – BASEMENT PLAN
PC-A103 – DIMENSIONED FIRST FLOOR PLAN
PC-A104 – DIMENSIONED BASEMENT PLAN
PC-A105 – CONTROL JOINT PLANS
PC-A111 – REFLECTED CEILING PLAN FIRST FLOOR
PC-A112 – REFLECTED CEILING PLAN BASEMENT
PC-A121 – ROOF PLAN
PC-A131 – FINISH LEGEND
PC-A132 – FINISH PLANS AND SCHEDULE
PC-A133 – FINISH PLANS AND SCHEDULE
PC-A135 – SIGNAGE PLAN
PC-A136 – SIGNAGE DETAILS
PC-A140 – FURNITURE PLAN
PC-A201 – EXTERIOR ELEVATIONS
PC-A202 – EXTERIOR ELEVATIONS
PC-A203 – EXTERIOR PANEL LAYOUT
PC-A204 – EXTERIOR PANEL LAYOUT
PC-A301 – BUILDING SECTIONS
PC-A302 – BUILDING SECTIONS
PC-A400 – TYPICAL TOILET AND BATH ACCESSORIES
PC-A401 – ENLARGED TOILET PLANS AND ELEVATIONS
PC-A402 – ENLARGED TOILET PLANS AND ELEVATIONS
PC-A403 – INTERIOR ELEVATIONS
PC-A404 – INTERIOR ELEVATIONS
PC-A405 – INTERIOR ELEVATIONS
PC-A406 – ENLARGED STAIR PLANS AND DETAILS
PC-A407 – ENLARGED STAIR PLANS AND DETAILS
PC-A408 – ENLARGED STAIR PLANS AND DETAILS
PC-A409 – ENLARGED STAIR PLANS AND DETAILS
PC-A410 – ENLARGED STAIR PLANS AND DETAILS
PC-A411 – ENLARGED STAIR PLANS AND DETAILS
PC-A412 – ENLARGED STAIR PLANS AND DETAILS
PC-A421 – WALL SECTIONS
PC-A422 – WALL SECTIONS
PC-A423 – WALL SECTIONS
PC-A424 – WALL SECTIONS
PC-A425 – WALL SECTIONS
PC-A426 – WALL SECTIONS
PC-A427 – WALL SECTIONS
PC-A428 – WALL SECTIONS
PC-A429 – WALL SECTIONS
PC-A430 – WALL SECTIONS
PC-A431 – CANOPY DOWNSPOUT DETAILS
PC-A501 – PLAN DETAILS
PC-A502 – PLAN DETAILS
PC-A503 – PLAN DETAILS
PC-A504 – PLAN DETAILS
PC-A505 – AIR BARRIER DETAILS
PC-A506 – AIR BARRIER DETAILS
PC-A510 – MILLWORK DETAILS
PC-A511 – INTERIOR DETAILS
PC-A512 – INTERIOR DETAILS
PC-A513 – TRANSITION DETAILS
PC-A521 – HEAD, JAMB AND SILL DETAILS
PC-A522 – HEAD, JAMB AND SILL DETAILS
PC-A523 – HEAD, JAMB AND SILL DETAILS
PC-A524 – HEAD, JAMB AND SILL DETAILS
PC-A525 – ROOF DETAILS
PC-A526 – ROOF DETAILS
PC-A527 – ROOF DETAILS
PC-A528 – ROOF DETAILS
PC-A601 – DOOR SCHEDULE
PC-A602 – WINDOW SCHEDULE

STRUCTURAL
PC-S001 – GENERAL NOTES
PC-S002 – GENERAL NOTES
PC-S003 – GENERAL NOTES
PC-S004 – GENERAL NOTES
PC-S101 – PARK CENTER BASEMENT FOUNDATION AND SLAB PLAN
PC-S102 – PARK CENTER FIRST FLOOR SLAB PLAN
PC-S103 – PARK CENTER FIRST FLOOR FRAMING PLAN
PC-S104 – PARK CENTER ROOF FRAMING PLAN
PC-S301 – SECTIONS
PC-S302 – SECTIONS
PC-S303 – SECTIONS
PC-S501 – TYPICAL DETAILS
PC-S502 – TYPICAL DETAILS
PC-S503 – TYPICAL DETAILS
PC-S504 – TYPICAL DETAILS
PC-S505 – TYPICAL DETAILS

PLUMBING
PC-P001 – PLUMBING COVER SHEET
PC-P101 – FIRST FLOOR PLUMBING PLANS
PC-P102 – BASEMENT PLUMBING PLANS
PC-P501 – PLUMBING RISER DIAGRAMS
PC-P601 – PLUMBING DETAILS

MECHANICAL
PC-M001 – COVER SHEET
PC-M101 – DUCTWORK PLANS
PC-M201 – PIPING PLANS
PC-M401 – CONTROLS
PC-M601 – DETAILS
PC-M602 – DETAILS
PC-M701 – SCHEDULES

ELECTRICAL
PC-E001 – ELECTRICAL COVER SHEET
PC-E101 – POWER PLANS
PC-E201 – LIGHTING PLANS
PC-E401 – ELECTRICAL DETAILS
PC-E402 – FIRE ALARM DETAILS
PC-E501 – ELECTRICAL SCHEDULES

Landscape Architect / Prime Consultant:
Susan Hatchell Landscape Architecture, PLLC
711 W. North Street
Raleigh, NC 27603
T: (919) 838-9600

Civil Engineer, Site Structural, and Surveyor:
NV5
3300 Regency Parkway, Suite 100
Cary, NC 27518

Architect:
Esse Architects
632 Pershing Road
Raleigh, NC 27608

Building Structural Engineer:
Lynch Mykins Structural Engineers, PC
301 N. West Street, Suite 105
Raleigh, NC 27603

MEP Engineer:
The Wooten Company
120 N Boylan Avenue
Raleigh, NC 27603

Docusign Envelope ID: 32A15876-0539-8E64-8387-FC53D2C72009

AREA MAP

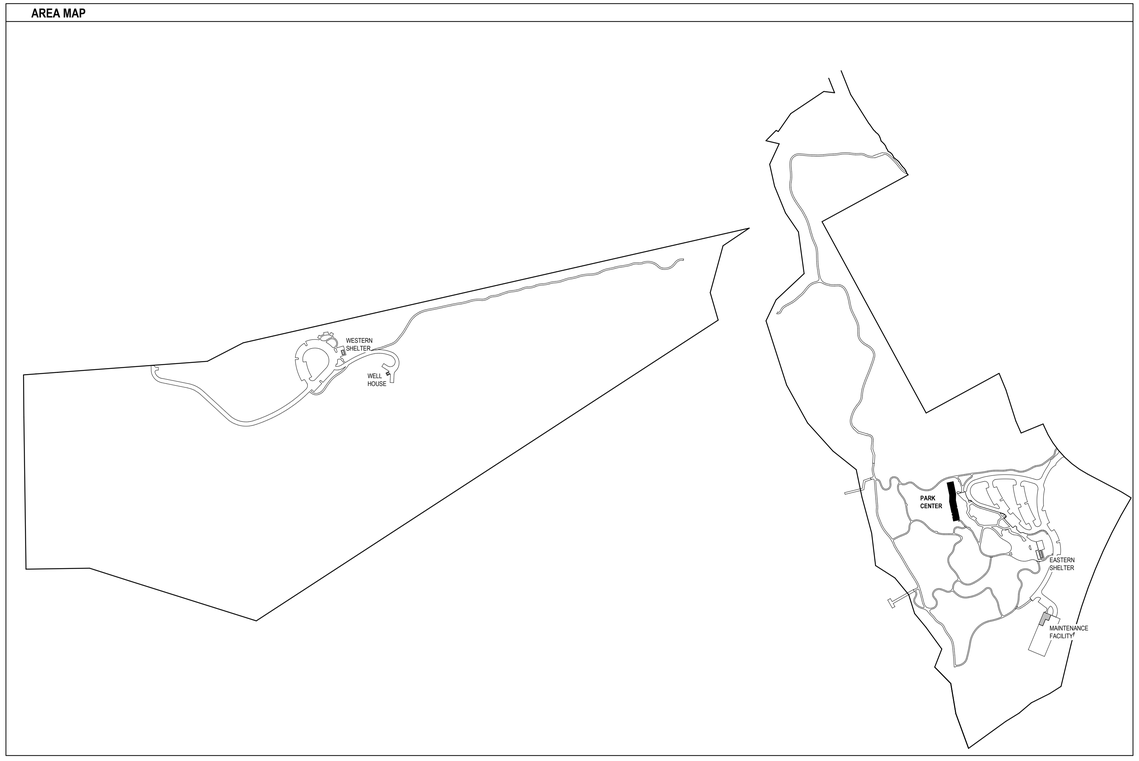

ABBREVIATIONS

ABBR.	FULL DESCRIPTION
@	AT
A/C	AIR CONDITION(ER)(ING)
AB	AIR BARRIER
ACC	ACCESSIBLE
ACM	ALUMINUM COMPOSITE MATERIAL
ADJ	ADJACENT
AFF	ABOVE FINISH FLOOR
AL	ALUMINUM
ALT	ALTERNATE
ARCH	ARCHITECT(URAL)
BD	BOARD
BFF	BELOW FINISH FLOOR
BLDG	BUILDING
BLKG	BLOCKING
BOS	BOTTOM OF STEEL
BRG	BEARING
CG	CORNERGUARD
CJ	CONTROL JOINT
CL	CENTERLINE
CLG	CEILING
CLR	CLEAR/CLEARANCE
CMU	CONCRETE MASONRY UNIT
COL	COLUMN
CONC	CONCRETE
CONT	CONTINUOUS
CPT	CARPET
CW	CURTAIN WALL
DEMO	DEMOL(ISH)(ITION)
DF	DRINKING FOUNTAIN
DIA	DIAMETER
DIM	DIMENSION
DN	DOWN
DS	DOWNSPOUT
DTL	DETAIL
DWG	DRAWING
EA	EACH
EIFS	EXTERIOR INSULATION AND FINISH SYSTEM
ELEC	ELECTRICAL
EOD	EDGE OF DECK
EOS	EDGE OF STEEL
EQ	EQUAL
EWC	ELECTRIC WATER COOLER
EXST	EXISTING
EXT	EXTERIOR
FD	FLOOR DRAIN
FE	FIRE EXTINGUISHER
FEC	FIRE EXTINGUISHER CABINET
FF	FINISH FLOOR
FIN	FINISH
FLR	FLOOR
FPRF	FIREPROOFING
FRT	FIRE RETARDANT TREATED
FT	FOOT/FEET

ABBREVIATIONS

ABBR.	FULL DESCRIPTION
FV	FIELD VERIFY
GA	GAUGE
GALV	GALVANIZED
GC	GENERAL CONTRACTOR
GFRC	GLASS FIBER REINFORCED CONCRETE
GL	GLASS
GWB	GYPSUM WALLBOARD
GYP	GYPSUM
HGT	HEIGHT
HM	HOLLOW METAL
HR	HOUR
HVAC	HEATING, VENTILATION, AND AIR CONDITIONING
INFO	NFORMATIONI
INT	INTERIOR
JT	JOINT
LAV	LAVATORY
LB	POUND
LH	LEFT HAND
MAX	MAXIMUM
MECH	MECHANICAL
MFR	MANUFACTURER
MIN	MINIMUM
MISC	MISCELLANEOUS
MO	MASONRY OPENING
MTL	METAL
N	NORTH
NA	NOT APPLICABLE
NC	NON-COMBUSTIBLE
NCSBC	NORTH CAROLINA STATE BUILDING CODE
NIC	NOT IN CONTRACT
NO	NUMBER
NTS	NOT TO SCALE
OC	ON CENTER
OM	ORNAMENTAL METAL
OPP	OPPOSITE
PL	PLATE
PLAM	PLASTIC LAMINATE
PLBG	PLUMBING
PME	PLUMBING/MECHANICAL/ELECTRICAL
PT	PRESSURE-TREATED
PVC	POLYVINYL CHLORIDE
PWD	PLYWOOD
RCP	REFLECTED CEILING PLAN
RD	ROOF DRAIN
RDL	ROOF DRAIN LEADER
REF	REFRIGERATOR
REINF	REINFORCE(D)(ING)(MENT)
REQ	REQUIRED
RH	RIGHT HAND
RM	ROOM
RO	ROUGH OPENING
RTU	ROOF TOP UNIT
SCW	SOLID CORE WOOD

ABBREVIATIONS

ABBR.	FULL DESCRIPTION
SF	SQUARE FOOT/FEET
SFT	STOREFRONT
SIM	SIMILAR
SPEC	SPECIFICATION
SPECS	SPECIFICATIONS
SQ	SQUARE
SS	STAINLESS STEEL
STD	STANDARD
STL	STEEL
SUSP	SUSPENDED
T&G	TONGUE AND GROOVE
THRU	THROUGH
TLT	TOILET
TOBB	TOP OF BOND BEAM
TOM	TOP OF MASONRY
TOP	TOP OF PARAPET
TOS	TOP OF STEEL
TSTAT	THERMOSTAT
TYP	TYPICAL
UL	UNDERWRITERS LABORATORY
UON	UNLESS OTHERWISE NOTED
VB	VAPOR BARRIER
VCT	VINYL COMPOSITION TILE
VIF	VERIFY IN FIELD
W/	WITH
W/I	WITHIN
W/O	WITHOUT
WC	WATER CLOSET
WD	WOOD
WT	WEIGHT
WWF	WELDED WIRE FABRIC

MATERIAL LEGEND

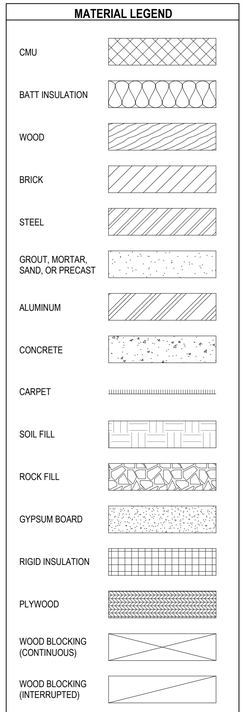

SYMBOL LEGEND

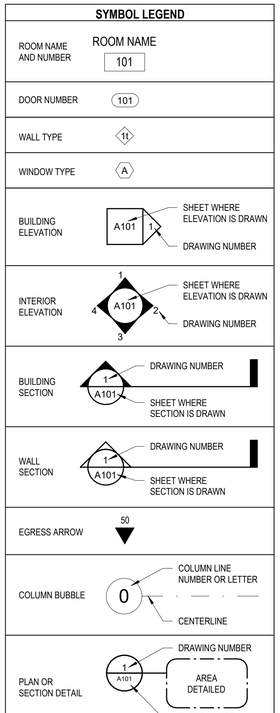

GENERAL NOTES

1. GENERAL CONTRACTOR IS RESPONSIBLE FOR OBTAINING PERMITS AND INSPECTIONS REQUIRED BY PUBLIC AUTHORITIES GOVERNING THE WORK.
2. REVIEW DOCUMENTS AND VERIFY DIMENSIONS AND FIELD CONDITIONS. REPORT ANY CONFLICTS OR OMISSIONS TO THE ARCHITECT FOR CLARIFICATION PRIOR TO PERFORMING ANY WORK IN QUESTION.
3. CONTRACTOR TO NOTIFY ARCHITECT OF ANY DISCREPANCIES BETWEEN ARCHITECTURAL AND CONSULTANT DRAWINGS AND SHALL OBTAIN WRITTEN CLARIFICATION FROM ARCHITECT BEFORE PROCEEDING WITH THE WORK IN QUESTION OR RELATED WORK.
4. SUBMIT REQUESTS FOR SUBSTITUTIONS, REVISIONS, OR CHANGES TO ARCHITECT FOR REVIEW PRIOR TO PURCHASE, FABRICATION, OR INSTALLATION. COORDINATE WITH SPECIFICATIONS AS THESE MAY BE REQUIRED BEFORE BID DAY.
5. OWNER WILL PROVIDE WORK NOTED "BY OTHERS" OR "NIC" UNDER SEPARATE CONTRACT. INCLUDE SCHEDULE REQUIREMENTS IN CONSTRUCTION PROGRESS SCHEDULE AND COORDINATE TO ASSURE ORDERLY SEQUENCE OF INSTALLATION, UNLESS OTHERWISE DIRECTED. NOTIFY ARCHITECT OF ANY CONFLICTS OR DISCREPANCIES WITH NIC ITEMS.
6. COORDINATE TELECOMMUNICATIONS, DATA, AND SECURITY SYSTEM INSTALLATIONS.
7. DO NOT SCALE DRAWINGS, WRITTEN DIMENSIONS GOVERN. IN CASE OF CONFLICT, CONSULT THE ARCHITECT.
8. PROVIDE A PORTABLE FIRE EXTINGUISHER WITHIN 75 FOOT TRAVEL DISTANCE TO ALL PORTIONS OF THE BUILDING ON EACH FLOOR, AND ADDITIONAL FIRE EXTINGUISHERS AS REQUIRED BY FIRE OR BUILDING FIELD INSPECTORS.
9. PROVIDE ILLUMINATED EXIT SIGN OVER REQUIRED EXITS, WHERE SHOWN ON DRAWINGS, AND ADDITIONAL SIGNS AS REQUIRED BY FIRE OR BUILDING FIELD INSPECTORS. CONNECT EXIT SIGNS TO EMERGENCY POWER CIRCUITS. SEE ELECTRICAL DRAWINGS.
10. PRIOR TO CORING SLAB FOR FLOOR POWER OR DATA, OR POURING AROUND POWER/DATA LOCATIONS, REVIEW LOCATIONS WITH ARCHITECT AND OWNER.
11. GANG ADJACENT LIGHT SWITCHES AND COVER WITH A SINGLE PLATE.
12. MAINTAIN INTEGRITY OF FIRE RESISTANCE RATING OF ALL RATED SHAFT ENCLOSURES AND RATED PARTITIONS BEHIND RECESSED WALL ACCESSORIES, SUCH AS FIRE EXTINGUISHER CABINETS, TOILET ACCESSORIES, AND ELECTRICAL BOXES.
13. NO EXPOSED CONDUIT, WIRING, PIPING, OR BOXES ARE PERMITTED WITHOUT ARCHITECT AND OWNER APPROVAL, UNLESS SPECIFICALLY NOTED OTHERWISE.
14. GENERAL CONTRACTOR WILL BE RESPONSIBLE FOR COORDINATION BETWEEN THE TRADES PROVIDING SYSTEMS IN OPEN CEILING CONDITIONS. COORDINATION DRAWINGS AND ANY CONFLICTS ARE TO BE REVIEWED WITH THE ARCHITECT PRIOR TO INSTALLATION.
15. REFER TO THE PROJECT MANUAL FOR COMPLETE GENERAL REQUIREMENTS AND CONDITIONS OF THE CONTRACT. THE PROJECT MANUAL SHALL TAKE PRECEDENCE OVER THESE GENERAL NOTES IN THE EVENT OF A CONFLICT.
16. IF PROVIDED, REFER TO ENLARGED PLANS AND PLAN DETAILS FOR ADDITIONAL INFORMATION AND DIMENSIONS.
17. TYPICAL DETAILS SHOWN ON THE DRAWINGS SHALL BE INCORPORATED AT ALL APPROPRIATE LOCATIONS WHETHER OR NOT SPECIFICALLY REFERENCED AT EACH LOCATION.
18. IN AREAS OF HARD CEILING, BUILDING SYSTEMS SHALL BE CONFIGURED TO AVOID OR MINIMIZE ABOVE-CEILING ACCESS. THE LOCATION OF ALL ACCESS DOORS MUST BE COORDINATED WITH AND APPROVED BY ARCHITECT PRIOR TO THE INSTALLATION OF ANY ABOVE-CEILING EQUIPMENT, DAMPERS, VALVES, JUNCTION BOXES, ETC. ANY ACCESS DOORS OR PANELS REQUIRED IN WALLS MUST ALSO BE COORDINATED WITH AND APPROVED BY THE ARCHITECT PRIOR TO THE INSTALLATION OF THE EQUIPMENT REQUIRING ACCESS.
19. CONTRACTOR SHALL BE SOLELY RESPONSIBLE FOR THE ACCURACY OF HIS MEASUREMENTS AND TAKE-OFFS FOR MATERIAL ORDERS.
20. VARIATIONS IN FLOOR LEVEL IN EXCESS OF 1/8" FOR EVERY 10'-0" (U.O.N.) SHALL BE LEVELED BY CONTRACTOR.

Susan Hatchell
Landscape Architecture, PLLC
711 W. North Street, Raleigh, NC 27603
p: 919-838-9600 f: 919-838-9700

Esse Architects
632 PERSHING ROAD | RALEIGH, NORTH CAROLINA 27608

ABBREVIATIONS, SYMBOLS, AND GENERAL NOTES

LAKE MYRA COUNTY PARK
Wake County, NC

REVISIONS

Esse Architects P.A. Registered Architectural Corporation 52498 North Carolina Raleigh, NC

MIRANDA DONNER ROTHOFF Registered Architect 17663 Signed by: Miranda Rothoff DocuSign Envelope ID: 1E2A4B8C-D5A8-4E7F-9C3D-6B2A1F0E9D7C North Carolina Raleigh, NC 7/27/2026

Date: 07/27/26

PC-G001

Docusign Envelope ID: 32A15876-0539-8E64-8387-FC53D2C72009

2018 APPENDIX B - PARK CENTER
BUILDING CODE SUMMARY FOR ALL COMMERCIAL PROJECTS
(EXCEPT 1 AND 2-FAMILY DWELLINGS AND TOWNHOUSES)

NAME OF PROJECT: LAKE MYRA COUNTY PARK
ADDRESS: EASTERN PARCEL - 10505 POOLE ROAD, WENDELL, NC 27591

OWNER: ERIC STAEHLE PHONE #: (919)856-6369 E-MAIL: eric.staehle@wake.gov
AUTHORIZED AGENT: JENNIFER STEED PHONE #: (919)845-8397 E-MAIL: jennifer@susanhatchell.com
OWNED BY: ☒ COUNTY ☐ PRIVATE ☐ STATE
CODE ENFORCEMENT JURISDICTION: ☐ CITY: RALEIGH, NC ☒ COUNTY: WAKE ☐ STATE

CONTACT: JENNIFER STEED, SUSAN HATCHELL LANDSCAPE ARCHITECTURE

DESIGNER	FIRM	NAME	LICENSE #	PHONE #	EMAIL
ARCHITECTURAL	ESSE ARCHITECTS	MIRANDA POTTHOFF	11663	(919)270-6455	miranda@esse-architects.com
LANDSCAPE	SUSAN HATCHELL LANDSCAPE ARCH.	SUSAN HATCHELL	528	(919)845-8397	susan@susanhatchell.com
CIVIL	NV5	MICHAEL ALLEN	22514	(919)858-1888	michael.allen@nv5.com
ELECTRICAL	THE WOOTEN COMPANY	ROBERT EGAN	16765	(919)828-0531	began@thewootencompany.com
FIRE ALARM	THE WOOTEN COMPANY	ROBERT EGAN	16765	(919)828-0531	began@thewootencompany.com
PLUMBING	THE WOOTEN COMPANY	SCOTT ENNIS	029728	(919)828-0531	sennis@sigmaes.com
MECHANICAL	THE WOOTEN COMPANY	SCOTT ENNIS	029728	(919)828-0531	sennis@sigmaes.com
SPRINKLER	N/A				
STRUCTURAL	LYNCH MYKINS / IMEG	SCOTT FRANCIS	044996	(757) 502-8527	scott.m.francis@imegcorp.com
RETAINING WALLS	LYNCH MYKINS / IMEG	SCOTT FRANCIS	044996	(757) 502-8527	scott.m.francis@imegcorp.com

2018 NC BUILDING CODE: ☒ NEW CONSTRUCTION ☐ PHASED CONSTRUCTION
☐ 1ST TIME INTERIOR COMPLETION ☐ RENOVATION
☐ SHELL/CORE ☐ ADDITION

2018 NC EXISTING BUILDING CODE: ☐ PRESCRIPTIVE ☐ REPAIR ☐ CHAPTER 14
ALTERATION: ☐ LEVEL I ☐ LEVEL II ☐ LEVEL III
☐ HISTORIC ☐ CHANGE OF USE

CONSTRUCTED N/A CURRENT OCCUPANCY (CHAPTER 3) N/A
RENOVATED N/A PROPOSED OCCUPANCY (CHAPTER 3) N/A
OCCUPANCY CATEGORY: (TABLE 1604.5) CURRENT: ☐ I ☐ II ☐ III ☐ IV
PROPOSED: ☐ I ☐ II ☐ III ☐ IV

BASIC BUILDING DATA
CONSTRUCTION TYPE: ☐ I-A ☐ II-A ☐ III-A ☐ IV ☐ V-A
☐ I-B ☒ II-B ☐ III-B ☐ V-B

SPRINKLERS: ☐ N/A ☐ YES ☒ NO ☐ PARTIAL
☒ N/A ☐ NFPA 13 ☐ NFPA 13R ☐ NFPA 13 D
STANDPIPES: ☒ NO ☐ CLASS 1 WET ☐ CLASS 1 DRY ☐ CLASS II WET ☐ CLASS II DRY
☐ CLASS III WET ☐ CLASS III DRY

FIRE DISTRICT: ☒ NO ☐ YES FLOOD HAZARD AREA: ☒ NO ☐ YES
SPECIAL INSPECTIONS REQUIRED: ☐ NO ☒ YES

GROSS BUILDING AREA TABLE:

FLOOR	EXISTING (SQ FT)	NEW (SQ FT)	SUB-TOTAL
6TH FLOOR	N/A	N/A	N/A
5TH FLOOR	N/A	N/A	N/A
4TH FLOOR	N/A	N/A	N/A
3RD FLOOR	N/A	N/A	N/A
2ND FLOOR	N/A	N/A	N/A
MEZZANINE	N/A	N/A	N/A
1ST FLOOR	N/A	7,931	7,931
BASEMENT	N/A	3,086	3,086
TOTAL			11,017

ALLOWABLE AREA
PRIMARY OCCUPANCY: ASSEMBLY ☐ A-1 ☐ A-2 ☒ A-3 ☐ A-4 ☐ A-5
☒ BUSINESS ☐ EDUCATIONAL FACTORY ☐ F-1 MODERATE ☐ F-2 LOW
HAZARDOUS ☐ H-1 DETONATE ☐ H-2 DEFLAGRATE ☐ H-3 COMBUST ☐ H-4 HEALTH ☐ H-5 HPM
INSTITUTIONAL ☐ I-1 CONDITION 1 ☐ I-1 CONDITION 2 ☐ I-2 CONDITION 1 ☐ I-2 CONDITION 2
☐ I-3 CONDITION 1 ☐ 2 ☐ 3 ☐ 4 ☐ 5 ☐ I-4
MERCANTILE ☐ RESIDENTIAL ☐ R-1 ☐ R-2 ☐ R-3 ☐ R-4
STORAGE ☒ S-1 ☐ S-1 HIGH PILED ☐ S-2 ☐ S-2 HIGH-PILED ☐ STORAGE GARAGE OPEN
☐ UTILITY AND MISCELLANEOUS ☐ REPAIR GARAGE ☐ PARKING GARAGE ENCLOSED
ACCESSORY OCCUPANCY CLASSIFICATION: NA
INCIDENTAL USES: TABLE 509 NA
SPECIAL USES (CHAPTER 4 - LIST CODE SECTIONS): NA
SPECIAL PROVISIONS (CHAPTER 5 - LIST CODE SECTIONS): NA
MIXED OCCUPANCY: ☐ NO ☒ YES SEPARATION: 2 HR EXCEPTION

ACTUAL AREA OF OCCUPANCY A / ALLOWABLE AREA OF OCCUPANCY A + ACTUAL AREA OF OCCUPANCY B / ALLOWABLE AREA OF OCCUPANCY B <_ 1

FIRE AREA 1: 1,916 / 16,625 + 464 / 30,625 = 0.115 + 0.015 = 0.13 < 1
FIRE AREA 2: 1,110 / 16,625 + 3,207 / 40,250 = 0.067 + 0.080 = 0.147 < 1

THE PORTION OF THE BUILDING INCLUDING THE CLASSROOMS AND THEIR ASSOCIATED STORAGE ROOMS IS SEPARATED FROM THE OTHER OCCUPANCIES IN THE BUILDING BY A 2-HR FIRE BARRIER, CREATING FIRE AREA 1. THE REMAINING PORTION OF THE FIRST FLOOR IS FIRE AREA 2. BOTH FIRE AREAS INCLUDE A MIX OF OCCUPANCIES A-3, B, AND/OR S-1. BOTH FIRE AREAS ARE NON-SEPARATED MIXED USE, WITH A-3 CONTROLLING. THE BASEMENT UNDER THE CLASSROOMS IS FIRE AREA 3 AND INCLUDES ONLY S-1 OCCUPANCY.

STORY NO.	DESCRIPTION AND USE	(A) BLDG AREA PER STORY (ACTUAL)	(B) TABLE 506.2 AREA	(C) AREA FOR FRONTAGE INCREASE [1]	(D) AREA FOR SPRINKLER INCREASE [2]	(E) ALLOWABLE AREA OR UNLIMITED [3]	(F) MAXIMUM BUILDING AREA [4]
1	FIRE AREA 1 - CLASSROOMS A-3	1,916	9,500	75%	0%	16,625	33,250
1	FIRE AREA 1 - STORAGE S-1	464	17,500	75%	0%	30,625	61,250
1	FIRE AREA 2 - EXHIBIT A-3	1,110	9,500	75%	0%	16,625	33,250
1	FIRE AREA 2 - BUSINESS B	3,207	23,000	75%	0%	40,250	80,500
B	FIRE AREA 3 - MECH/STOR S-1	2,677	17,500	75%	0%	30,625	61,250

OCCUPANCY A-3 IS THE MOST RESTRICTIVE AND CONTROLS BOTH FIRE AREAS 1 & 2.

1. FRONTAGE AREA INCREASES FROM SECTION 506.2 ARE COMPUTED THUS:
   A. PERIMETER WHICH FRONTS A PUBLIC WAY OR OPEN SPACE HAVING 20 FEET MINIMUM WIDTH = 510 FT
   B. TOTAL BUILDING PERIMETER = 510 FT (P)
   C. RATIO (F/P) = 510 / 510 = 1 (F/P)
   D. W = MINIMUM WIDTH OF PUBLIC WAY = 30 T (W)
   E. PERCENT OF FRONTAGE INCREASE I = 100 [510 / 510 - 0.25] x 30/30 = 75 (%)
2. UNLIMITED AREA APPLICABLE UNDER CONDITIONS OF SECTION 507.
3. MAXIMUM BUILDING AREA = TOTAL NUMBER OF STORIES IN BUILDING X D (MAXIMUM 2 STORIES) (504.4)
4. THE MAXIMUM AREA OF PARKING GARAGES MUST COMPLY WITH TABLE 406.5.4.
5. FRONTAGE INCREASE IS BASED ON THE UNSPRINKLERED AREA VALUE IN TABLE 506.2.

ALLOWABLE HEIGHT

		ALLOWABLE	SHOWN ON PLANS	CODE REFERENCE [1]
BLDG HEIGHT IN FEET	TABLE 504.3 [2]	55	27'	TABLE 504.3
BLDG HEIGHT IN STORIES	TABLE 504.4 [3]	2	2	TABLE 504.4

[1] PROVIDE CODE REFERENCE IF THE "SHOWN ON PLANS" QUANTITY IS NOT BASED ON TABLE 504.3 OR 504.4.
[2] THE MAXIMUM HEIGHT OF AIR TRAFFIC CONTROL TOWERS MUST COMPLY WITH TABLE 412.3.1.
[3] THE MAXIMUM HEIGHT OF OPEN PARKING GARAGES MUST COMPLY WITH TABLE 406.5.4.

FIRE PROTECTION REQUIREMENTS

BUILDING ELEMENT	FIRE SEPARATION DISTANCE (FEET)	RATING REQ'D	RATING PROVIDED (W/ ____* REDUCTION)	DETAIL # AND SHEET #	DESIGN # FOR RATED ASSEMBLIES	DESIGN # FOR RATED PENETRATION	DESIGN # FOR RATED JOINTS
STRUCTURAL FRAME, INCL. COLUMNS, GIRDERS, TRUSSES	OVER 30'	0	0				
BEARING WALLS							
EXTERIOR							
NORTH	OVER 30'	0	0				
EAST	OVER 30'	0	0				
WEST	OVER 30'	0	0				
SOUTH	OVER 30'	0	0				
INTERIOR							
NON-BEARING WALLS & PARTITIONS							
EXTERIOR		N/A					
NORTH	OVER 30'	N/A					
EAST	OVER 30'	N/A					
WEST	OVER 30'	N/A					
SOUTH	OVER 30'	N/A					
INTERIOR WALLS & PARTITIONS	N/A	N/A	N/A				
FLOOR CONSTRUCTION INCLUDING SUPPORTING BEAMS AND JOISTS	N/A	0					
FLOOR CEILING ASSEMBLY		2	2	PC-G105	UL D859		
COLUMNS SUPPORTING FLOORS		0	0				
ROOF CONSTRUCTION INCLUDING SUPPORTING BEAMS AND JOISTS	N/A	0					
ROOF CEILING ASSEMBLY		N/A	0				
COLUMNS SUPPORTING ROOF		N/A	0				
SHAFT ENCLOSURES - EXIT		N/A	0				
SHAFT ENCLOSURES - OTHER		N/A	0				
CORRIDOR SEPARATION		N/A	0				
OCCUPANCY/FIRE BARRIER SEPARATION	2	2	2	PC-G103, PC-G104	U419, U415		HW D 0016
PARTY/FIRE WALL SEPARATION		N/A	0				
SMOKE BARRIER SEPARATION		N/A	0				
SMOKE PARTITION		N/A	0				
TENANT/DWELLING UNIT/SLEEPING UNIT SEPARATION		N/A	0				
INCIDENTAL USE SEPARATION		N/A	0				

* INDICATE SECTION NUMBER PERMITTING REDUCTION

PERCENTAGE OF WALL OPENING CALCULATIONS

FIRE SEP DISTANCE (FEET) FROM PROPERTY LINES	DEGREE OF OPENINGS PROTECTION (TABLE 705.8)	ALLOWABLE AREA (%)	ACTUAL SHOWN ON PLANS (%)
OVER 30'	NO LIMIT		

LIFE SAFETY SYSTEM REQUIREMENTS
EMERGENCY LIGHTING: ☐ NO ☒ YES
EXIT SIGNS: ☐ NO ☒ YES
FIRE ALARM: ☐ NO ☒ YES
SMOKE DETECTION SYSTEMS: ☐ NO ☒ YES ☒ PARTIAL
CARBON MONOXIDE DETECTION: ☒ NO ☐ YES

LIFE SAFETY PLAN REQUIREMENTS
LIFE SAFETY PLAN SHEET # PC-G102
☒ FIRE AND/OR SMOKE WALL LOCATIONS (CHAPTER 7)
☐ ASSUMED AND REAL PROPERTY LINE LOCATIONS (IF NOT ON THE SITE PLAN) **N/A**
☐ EXTERIOR WALL OPENING AREA WITH RESPECT TO DISTANCE TO ASSUMED PROPERTY LINES (705.8) **N/A**
☒ OCCUPANCY USE FOR EACH AREA AS IT RELATES TO OCCUPANT LOAD CALCULATIONS (TABLE 1004.1.2)
☒ OCCUPANT LOADS FOR EACH AREA
☒ EXIT ACCESS TRAVEL DISTANCES (1017)
☒ COMMON PATH OF TRAVEL DISTANCES (TABLES 1006.2.1 & 1006.3.2(1))
☐ DEAD END LENGTHS (1020.4) **NONE**
☒ CLEAR EXIT WIDTHS FOR EACH EXIT DOOR
☒ MAXIMUM CALCULATED OCCUPANT LOAD CAPACITY EACH EXIT DOOR CAN ACCOMMODATE BASED ON EGRESS WIDTH (1005.3)
☒ ACTUAL OCCUPANT LOAD FOR EACH EXIT DOOR
☒ A SEPARATE SCHEMATIC PLAN INDICATING WHERE FIRE RATED FLOOR/CEILING AND/OR ROOF STRUCTURE IS PROVIDED FOR OCCUPANCY SEPARATION
☒ LOCATION OF DOORS WITH PANIC HARDWARE (1010.1.10)
☐ LOCATION OF DOORS WITH DELAYED EGRESS LOCKS AND THE AMOUNT OF DELAY (1010.1.9.7) **N/A**
☐ LOCATION OF DOORS WITH ELECTROMAGNETIC EGRESS LOCKS (1010.1.9.9) **N/A**
☐ LOCATION OF DOORS EQUIPPED WITH HOLD OPEN DEVICES **N/A**
☐ LOCATION OF EMERGENCY ESCAPE WINDOWS (1030) **N/A**
☒ THE SQUARE FOOTAGE OF EACH FIRE AREA (202)
☐ THE SQUARE FOOTAGE OF EACH SMOKE COMPARTMENT FOR OCCUPANCY CLASSIFICATION I-2 (407.5) **N/A**
☐ NOTE ANY CODE EXCEPTIONS OR TABLE NOTES THAT MAY HAVE BEEN UTILIZED REGARDING THE ITEMS ABOVE **NONE**

ACCESSIBLE DWELLING UNITS (SECTION 1107) N/A

TOTAL UNITS	ACCESSIBLE UNITS REQUIRED	ACCESSIBLE UNITS PROVIDED	TYPE A UNITS REQUIRED	TYPE A UNITS PROVIDED	TYPE B UNITS REQUIRED	TYPE B UNITS REQUIRED	TOTAL - ACCESSIBLE UNITS PROVIDED

ACCESSIBLE PARKING (SECTION 1106) - SEE COVER SHEET OF EASTERN PARCEL SITE DRAWING SET.

LOT OR PARKING AREA	TOTAL # PARKING REQUIRED	TOTAL # PARKING PROVIDED	# OF ACCESSIBLE SPACES PROVIDED: REGULAR W/ 5' ACCESS AISLE	VAN SPACE WITH 132" ACC. AISLE	VAN SPACE WITH 8' ACC. AISLE	TOTAL # ACCESSIBLE UNITS PROVIDED
PARK CENTER	24	103 STANDARD SPACES	8 ACCESSIBLE SPACES		2	10 ACCESSIBLE SPACES
MAINTENANCE FAC.	6					
PICNIC SHELTER	8					
PLAYGROUND	34					
BOATING	4					
FISHING	4					
TOTAL	80	103	8		2	10

PARKING SPACES LISTED HERE INCLUDES ALL STANDARD VEHICLE SPACES REQUIRED AND PROVIDED FOR THE EASTERN PARCEL. SEE SHEET COVERSHEET OF EASTERN PARCEL SITE DRAWING SET FOR ADDITIONAL PARKING INFO.

PLUMBING FIXTURE REQUIREMENTS (TABLE 2902.1) PARK CENTER ONLY.

USE	WATER CLOSETS MALE	WATER CLOSETS FEMALE	WATER CLOSETS UNISEX	URINALS	LAVATORIES MALE	LAVATORIES FEMALE	LAVATORIES UNISEX	SHOWERS & TUBS MALE	SHOWERS & TUBS FEMALE	DRINKING FOUNTAINS REGULAR	DRINKING FOUNTAINS ACCESSIBLE
A-3	1.5	2.8			0.9	0.9		0	0	0.74	
B	0.7	0.7			0.2	0.2		0	0	0.33	
S-1	0.07	0.07			0.07	0.07		0	0	0.01	
REQUIRED	2.27->3	3.57->4	0	0	1.17->2	1.17->2	0	0	0	1.08->2	1
PROVIDED	3	4	1	2	2	2	2	0	0	2	2

SPECIAL APPROVALS
LOCAL JURISDICTION, DEPARTMENT OF INSURANCE, OSC, DPI, DHHS, ETC., DESCRIBE BELOW.

ENERGY SUMMARY
ENERGY REQUIREMENTS:

THE FOLLOWING DATA SHALL BE CONSIDERED MINIMUM AND ANY SPECIAL ATTRIBUTE REQUIRED TO MEET THE ENERGY CODE SHALL ALSO BE PROVIDED. EACH DESIGNER SHALL FURNISH THE REQUIRED PORTIONS OF THE PROJECT INFORMATION FOR THE PLAN DATA SHEET. IF PERFORMANCE METHOD, STATE THE ANNUAL ENERGY COST FOR THE STANDARD REFERENCE DESIGN VS. ANNUAL ENERGY FOR THE PROPOSED DESIGN.

EXISTING BUILDING ENVELOPE COMPLIES WITH CODE: ☐ YES (REMAINDER OF THIS SECTION IS NOT APPLICABLE) ☐ NO
EXEMPT BUILDING: ☐ YES ☒ NO PROVIDE CODE OR STATUTORY REFERENCE:
CLIMATE ZONE: ☐ N/A ☐ 3A ☒ 4A ☐ 5A
METHOD COMPLIANCE: ☐ ENERGY CODE PERFORMANCE ☒ ENERGY CODE PRESCRIPTIVE ☐ OTHER - PERFORMANCE
☐ ASHRAE 90.1 PERFORMANCE ☐ ASHRAE 90.1 PRESCRIPTIVE ☐
(IF "OTHER" SPECIFY SOURCE HERE)

THERMAL ENVELOPE (PRESCRIPTIVE METHOD ONLY)
ROOF/CEILING ASSEMBLY - STANDING SEAM
DESCRIPTION OF ASSEMBLY: SEE PC-A421 THROUGH PC-A430: STANDING SEAM ROOF / MIN. R-30 CONTINUOUS RIGID INSULATION / NOMINAL 2" WOOD DECK
U-VALUE OF TOTAL ASSEMBLY: U-0.02
R-VALUE OF INSULATION: MIN. R-30 CONTINUOUS INSULATION, R-43 SHOWN IN DETAILS
SKYLIGHTS IN EACH ASSEMBLY: N/A
U-VALUE OF SKYLIGHT: N/A
SKYLIGHTS AREA IN EACH ASSEMBLY: N/A

EXTERIOR WALLS - FIBER CEMENT CLADDING
DESCRIPTION OF ASSEMBLY: SEE PC-A421 THROUGH PC-A430: 8" METAL STUDS W/ MIN. R-19 BATT INSULATION / 5/8" SHEATHING / AIR-WEATHER BARRIER / MIN. R-10 CONT. RIGID INSULATION / AIRSPACE / FIBER CEMENT CLADDING
U-VALUE OF TOTAL ASSEMBLY: U-0.037
R-VALUE OF INSULATION: MIN. R-19 + R-10 CONTINUOUS INSULATION, R-19 + R-15CI SHOWN IN DETAILS

OPENINGS (WINDOWS & DOORS):
U-VALUE OF ASSEMBLY: U-0.45
SOLAR HEAT GAIN COEF: 0.25
PROJECTION FACTOR: 0.00
DOOR R-VALUES: ALUMINUM ENTRANCE - R-1.3 / HOLLOW METAL - R-2.0

WALLS ADJACENT TO UNCONDITIONED SPACE (EACH ASSEMBLY):
DESCRIPTION OF ASSEMBLY:
U-VALUE OF TOTAL ASSEMBLY:
R-VALUE OF INSULATION:

OPENINGS (WINDOWS & DOORS):
U-VALUE OF ASSEMBLY:
SOLAR HEAT GAIN COEF:
PROJECTION FACTOR:
DOOR R-VALUES: HOLLOW METAL - R-2.0

WALLS BELOW GRADE:
DESCRIPTION OF ASSEMBLY: SEE PC-A421 THROUGH PC-A430: CAST IN PLACE CONCRETE WALL W/ WATERPROOFING ON EXTERIOR SIDE AND 3" RIGID OR R-13 BATT INSULATION AT INTERIOR
U-VALUE OF TOTAL ASSEMBLY: U-0.064 AT BASEMENT, U-0.08 AT CRAWLSPACE
R-VALUE OF INSULATION: R-13 AT BASEMENT, R-15 AT CRAWLSPACE

FLOORS - UNCONDITIONED:
DESCRIPTION OF ASSEMBLY: N/A
U-VALUE OF TOTAL ASSEMBLY:
R-VALUE OF INSULATION:

FLOOR SLAB ON GRADE:
DESCRIPTION OF ASSEMBLY: SEE PC-A421 THROUGH PC-423, PC-A426 AND PC-A429: 4" OR 6" CONCRETE ON A VAPOR BARRIER ON DRAINAGE STONE ON GRADE
U-VALUE OF TOTAL ASSEMBLY:
R-VALUE OF INSULATION: R-15 CONTINUOUS PERIMETER INSULATION
HORIZONTAL/VERTICAL REQMT: VERTICAL TO TOP OF FOOTING AT WALLS / 2'-0" HORIZONTAL AT ENTRANCES AND DOORS
SLAB HEATED: N/A

STRUCTURAL DESIGN
DESIGN LOADS:
IMPORTANCE FACTORS: SNOW (Is): ☐ 0.8 ☐ 1.0 ☒ 1.1 ☐ 1.2
SEISMIC (Is): ☐ 1.0 ☒ 1.25 ☐ 1.5
LIVE LOADS: ROOF 20 PSF
MEZZANINE N/A PSF
FLOOR 100 PSF
GROUND SNOW LOAD: 15 PSF
WIND LOAD: ULTIMATE WIND SPEED 116 MPH (ASCE-7)
EXPOSURE CATEGORY ☐ N/A ☒ B ☐ C ☐ D

SEISMIC DESIGN CATEGORY: ☐ N/A ☒ A ☐ B ☐ C ☐ D
PROVIDE THE FOLLOWING SEISMIC PARAMETERS:
RISK FACTOR (TABLE 1604.5): ☐ N/A ☐ I ☐ II ☒ III ☐ IV
SPECIAL RESPONSE ACCELERATION: S_S 11.2 %g S_1 5.7 %g

SITE CLASSIFICATION (ASCE 7): ☐ N/A ☐ A ☐ B ☒ C ☐ D ☐ E ☐ F
DATA SOURCE: ☐ N/A ☒ FIELD TEST ☐ PRESUMPTIVE ☐ HISTORICAL DATA
BASIC STRUCTURAL SYSTEM: ☐ N/A ☐ BEARING WALL ☐ BLDG FRAME ☒ MOMENT FRAME
☐ DUAL W/ SPECIAL MOMENT FRAME ☐ INVERTED PENDULUM
☐ DUAL W/ INTERMEDIATE R/C OR SPECIAL STEEL
ANALYSIS PROCEDURE: ☐ N/A ☐ SIMPLIFIED ☒ EQUIVALENT LATERAL FORCE ☐ DYNAMIC
ARCHITECTURAL, MECHANICAL, COMPONENTS ANCHORED: ☐ N/A ☐ YES ☒ NO
LATERAL DESIGN CONTROL: ☐ N/A ☐ EARTHQUAKE ☒ WIND
SOIL BEARING CAPACITIES: 2,500 PSF

PILE SIZE, TYPE & CAPACITY N/A

MECHANICAL DESIGN
THIS IS THE BASE BID CONDITION AT THE PARK CENTER. THERE IS A BID ALTERNATE FOR GEOTHERMAL. SEE MECHANICAL DRAWINGS.
MECHANICAL SUMMARY: MECHANICAL SYSTEMS, SERVICE SYSTEMS AND EQUIPMENT
METHOD OF COMPLIANCE: ☒ PERSCRIPTIVE ☐ ENERGY COST BUDGET

THERMAL ZONE: 4A
WINTER DRY BULB: 19.7 DEGREES F
SUMMER DRY BULB: 95 DEGREES F

INTERIOR DESIGN COND:
WINTER DRY BULB: 68 DEGREES F
SUMMER DRY BULB: 75 DEGREES F
RELATIVE HUMIDITY: 50 DEGREES F

BUILDING HEATING LOAD: 53.17 MBH
BUILDING COOLING LOAD: 8.25 TONS

MECHANICAL SPACING CONDITIONING SYSTEM
UNITARY:
DESCRIPTION OF UNIT: SPLIT SYSTEM HEAT PUMPS
HEATING EFFICIENCY: SEE SCHEDULES ON M SHEETS
COOLING EFFICIENCY: SEE SCHEDULES ON M SHEETS
SIZE CATEGORY OF UNIT: SEE SCHEDULES ON M SHEETS
BOILER: SIZE CATEGORY: N/A IF OVERSIZED STATE REASON
CHILLER: SIZE CATEGORY: N/A IF OVERSIZED STATE REASON
LIST EQUIPMENT EFFICIENCIES: SEE M SHEETS

ELECTRICAL DESIGN
SEE ELECTRICAL DRAWINGS
ELECTRICAL SYSTEMS AND EQUIPMENT

METHOD OF COMPLIANCE: ☐ ENERGY CODE PERFORMANCE ☒ ENERGY CODE PRESCRIPTIVE ☐ N/A
☐ ASHRAE 90.1 PERFORMANCE ☐ ASHRAE 90.1 PRESCRIPTIVE

LIGHTING SCHEDULE:

LAMP TYPE REQUIRED IN FIXTURE	SEE FIXTURE SCHEDULE ON E SHEETS
NUMBER OF LAMPS IN FIXTURE	SEE FIXTURE SCHEDULE ON E SHEETS
BALLAST TYPE USED IN THE FIXTURE	SEE SPECIFICATIONS
NUMBER OF BALLASTS IN THE FIXTURE	SEE SPECIFICATIONS
TOTAL WATTAGE PER FIXTURE	VARIES - SEE FIXTURE SCHEDULE ON E SHEETS
TOTAL INTERIOR WATTAGE SPECIFIED VS. ALLOWED (WHOLE BUILDING OR SPACE BY SPACE)	4181 WATTS VS. 9585 WATTS (WHOLE BUILDING)
TOTAL EXTERIOR WATTAGE SPECIFIED VS. ALLOWED	450 WATTS VS 1550 WATTS

ADDITIONAL EFFICIENCY PACKAGE OPTIONS: (WHEN USING 2018 NCECC; NOT REQUIRED FOR ASHRAE 90.1)
☐ C406.2 MORE EFFICIENT HVAC EQUIPMENT PERFORMANCE
☒ C406.3 REDUCED LIGHTING POWER DENSITY
☐ C406.4 ENHANCED DIGITAL LIGHTING CONTROLS
☐ C406.5 ON-SITE RENEWABLE ENERGY
☐ C406.6 DEDICATED OUTDOOR AIR SYSTEM
☐ C406.7 REDUCED ENERGY USE IN SERVICE WATER HEATING

Susan Hatchell
Landscape Architecture, PLLC
711 W. North Street, Raleigh, NC 27603
p: 919-838-9600 f: 919-838-9700

Esse Architects
632 PERSHING ROAD | RALEIGH, NORTH CAROLINA 27608

CODE SUMMARY

LAKE MYRA COUNTY PARK
Wake County, NC

Esse Architects P.A. Registered Architectural Corporation 52498 North Carolina Raleigh, NC

MIRANDA DOWNER POTTHOFF Registered Architect 11663 North Carolina Raleigh, NC 7/27/2026

REVISIONS

Date: 07/27/26

PC-G101

Docusign Envelope ID: 32A15876-0539-8E64-8387-FC53D2C72009

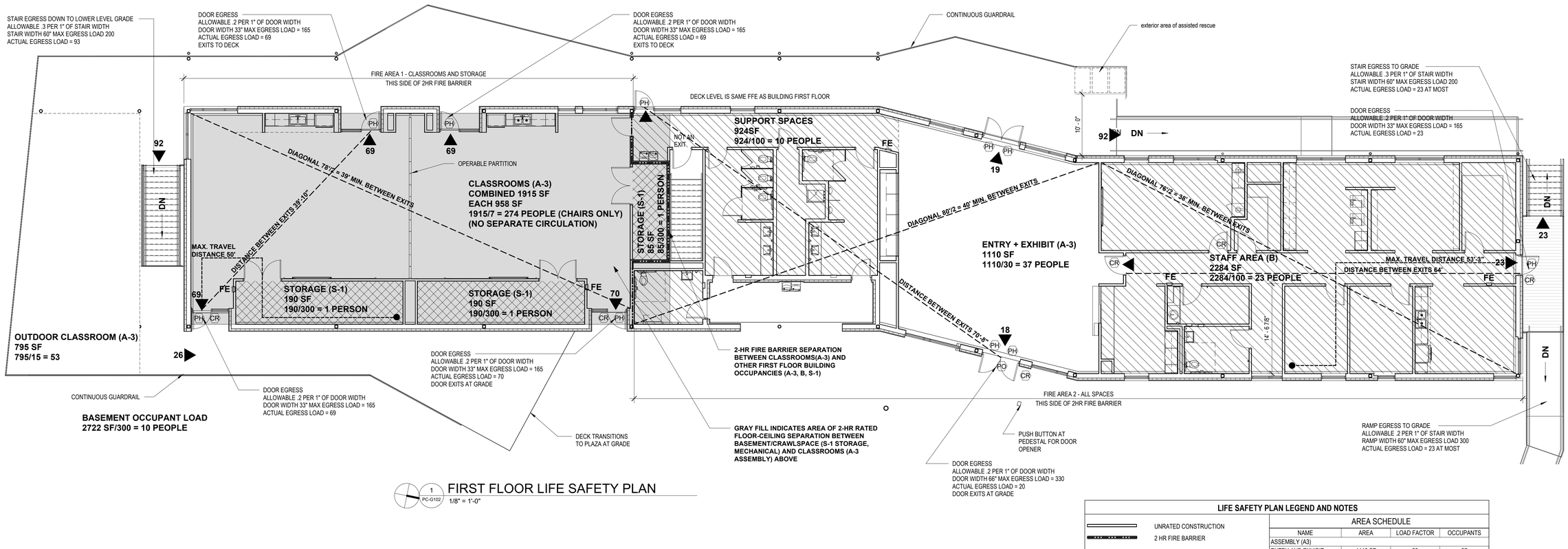

1 PC-G102 FIRST FLOOR LIFE SAFETY PLAN
1/8" = 1'-0"

LIFE SAFETY PLAN LEGEND AND NOTES

	UNRATED CONSTRUCTION
	2 HR FIRE BARRIER
PH	PANIC HARDWARE ON DOOR
## ▶	OCCUPANTS EGRESSING
CR	DOORS WITH CARD READERS (FREE EGRESS)
PO	DOOR WITH PUSH BUTTON OPENER
FE	SEMI RECESSED FIRE EXTINGUISHER CABINET

AREA SCHEDULE

NAME	AREA	LOAD FACTOR	OCCUPANTS
ASSEMBLY (A3)			
ENTRY AND EXHIBIT	1110 SF	30	37
CLASSROOMS	1916 SF	7	274
OUTDOOR CLASSROOM	790 SF	15	53
BUSINESS (B)			
STAFF AREA	2283 SF	100	23
SUPPORT SPACES	924 SF	100	10
STORAGE (S-1)			
CLASSROOM STORAGE	189 SF	300	1
CLASSROOM STORAGE	189 SF	300	1
CLASSROOM STORAGE	86 SF	300	1
BASEMENT MECHANICAL	1808 SF	300	7
BASEMENT STORAGE	869 SF	300	3

NOTES

1. SEE ELECTRICAL DRAWINGS FOR EXIT SIGN LOCATIONS.

ASSEMBLY (A-3)
BUSINESS (B)
STORAGE (S-1)

FIRE AREAS

FIRE AREA 1	2,436 SF
FIRE AREA 2	4,804 SF
FIRE AREA 3	2,711 SF

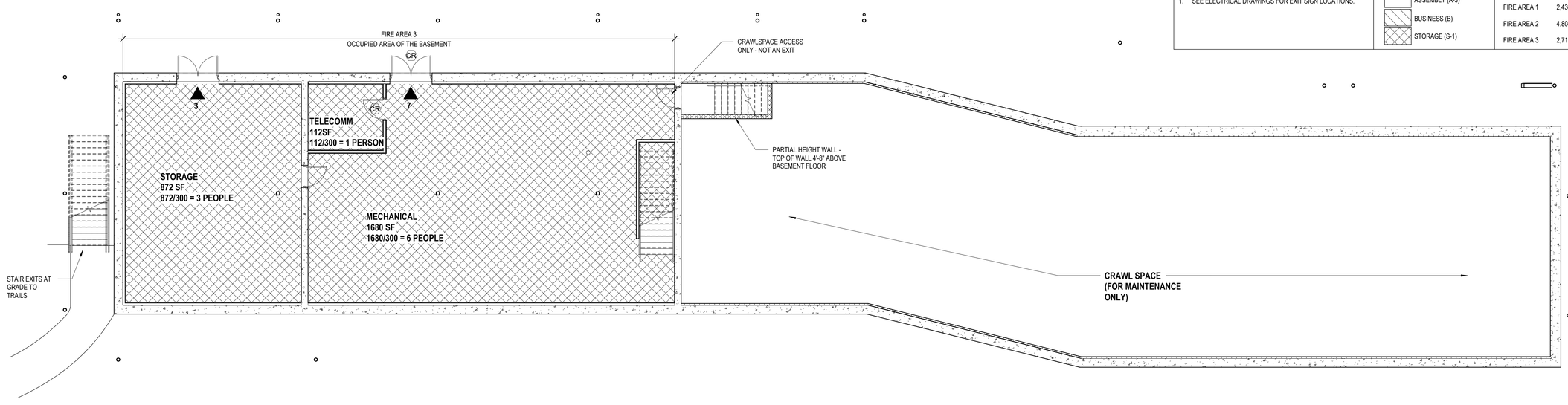

2 PC-G102 BASEMENT LIFE SAFETY
1/8" = 1'-0"

Susan Hatchell Landscape Architecture, PLLC
711 W. North Street, Raleigh, NC 27603
p: 919-838-9600 f: 919-838-9700

Esse Architects
832 PERSHING ROAD | RALEIGH, NORTH CAROLINA 27608

LIFE SAFETY PLAN

LAKE MYRA COUNTY PARK
Wake County, NC

REVISIONS

Esse Architects P.A. Registered Architectural Corporation 52498 North Carolina Raleigh, NC

MIRANDA DOWNER POTTHOFF Registered Architect 11663 Miranda Potthoff Raleigh, NC 7/27/2026

Date: 07/27/26

PC-G102

Docusign Envelope ID: 32A15876-0539-8E64-8387-FC53D2C72009

BXUV - Fire Resistance Ratings - ANSI/UL 263 Certified for United States
BXUV7 - Fire Resistance Ratings - CAN/ULC-S101 Certified for Canada

See General Information for Fire-resistance Ratings - ANSI/UL 263 Certified for United States
Design Criteria and Allowable Variances

See General Information for Fire Resistance Ratings - CAN/ULC-S101 Certified for Canada
Design Criteria and Allowable Variances

Design No. U419

June 14, 2024

Nonbearing Wall Ratings — 1, 2, 3 or 4 Hr (See Items 4 & 5 through 5J)
*** Indicates such products shall bear the UL or cUL Certification Mark for jurisdictions employing the UL or cUL Certification (such as Canada), respectively.**

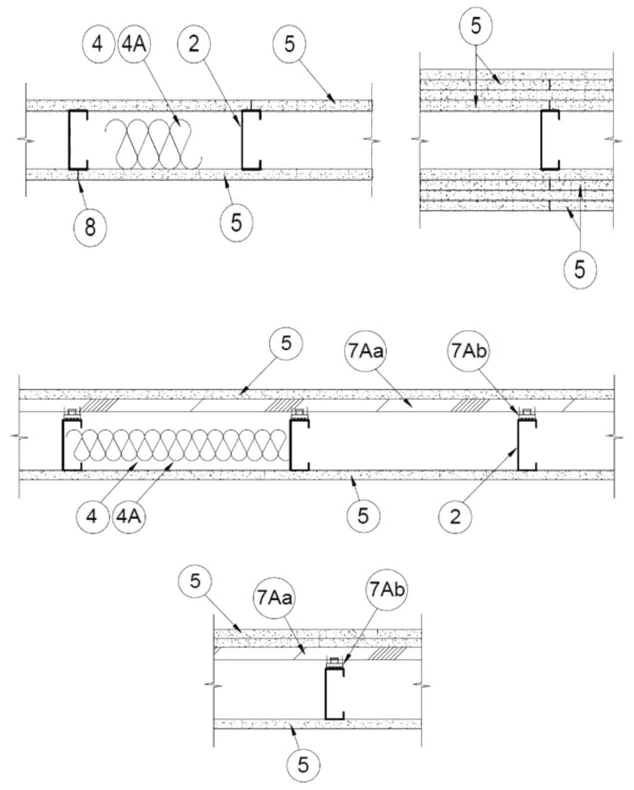

1. **Floor and Ceiling Runners —** (Not Shown) — For use with Item 2 — Channel shaped, fabricated from min 25 MSG corrosion-protected steel, min depth to accommodate stud size, with min 1-1/4 in. long legs, attached to floor and ceiling with fasteners 24 in. OC max.

1A. **Framing Members* — Floor and Ceiling Runner —** Not Shown — In lieu of Item 1 — For use with Item 2B, proprietary channel shaped runners, 3-5/8 in. deep attached to floor and ceiling with fasteners 24 in. OC max.
CEMCO, LLC — Viper25™ Track

CRACO MFG INC — SmartTrack25™

MARINO/WARE, DIV OF WARE INDUSTRIES INC — Viper25™ Track

IMPERIAL MANUFACTURING GROUP INC — Viper25™ Track

1B. **Framing Members* — Floor and Ceiling Runner —** Not Shown — In lieu of Item 1 — For use with Item 2C, proprietary channel shaped runners, 1-1/4 in. wide by 3-5/8 in. deep fabricated from min 0.018 in. thick galv steel, attached to floor and ceiling with fasteners spaced 24 in. OC max.
CEMCO, LLC — Viper20™ Track

MARINO/WARE, DIV OF WARE INDUSTRIES INC — Viper20™ Track

IMPERIAL MANUFACTURING GROUP INC — Viper20™ Track

1C. **Framing Members* — Floor and Ceiling Runners —** (Not Shown) — In lieu of Item 1 — Channel shaped, attached to floor and ceiling with fasteners 24 in. OC. max.
ALLSTEEL & GYPSUM PRODUCTS INC — Type SUPREME D24/30EQD and Type SUPREME D20

CONSOLIDATED FABRICATORS CORP, BUILDING PRODUCTS DIV — Type SUPREME D24/30EQD and Type SUPREME D20

QUAIL RUN BUILDING MATERIALS INC — Type SUPREME D24/30EQD and Type SUPREME D20

SCAFCO STEEL STUD MANUFACTURING CO — Type SUPREME D24/30EQD and Type SUPREME D20

STEEL CONSTRUCTION SYSTEMS INC — Type SUPREME D24/30EQD and Type SUPREME D20

TELLING INDUSTRIES L L C — Type SUPREME D24/30EQD and Type SUPREME D20

UNITED METAL PRODUCTS INC — Type SUPREME D24/30EQD and Type SUPREME D20

1D. **Floor and Ceiling Runners —** (Not Shown) — For use with Item 2A — Channel shaped, fabricated from min 20 MSG corrosion-protected or galv steel, min depth to accommodate stud size, with min 1 in. long legs, attached to floor and ceiling with fasteners spaced max 24 in. OC.

1E. **Framing Members* — Floor and Ceiling Runners —** (Not Shown, As an alternate to Item 1) — For use with Items 2E, 5F or 5G or 5I only, channel shaped, fabricated from min. 0.015 in. (min bare metal thickness) galvanized steel, attached to floor and ceiling with fasteners 24 in. OC. max.
CLARKDIETRICH BUILDING SYSTEMS — CD ProTRAK

DMFCWBS L L C — ProTRAK

MBA METAL FRAMING — ProTRAK

RAM SALES L L C — Ram ProTRAK

STEEL STRUCTURAL PRODUCTS L L C — Tri-S ProTRAK

1F. **Framing Members* — Floor and Ceiling Runner —** Not Shown — In lieu of Item 1 — For use with Item 2F, proprietary channel shaped runners, minimum width to accommodate stud size, with 1- 1/8 in. long legs fabricated from min 0.015 in. (min bare metal thickness) galv steel, attached to floor and ceiling with fasteners spaced 24 in. OC max.
SUPER STUD BUILDING PRODUCTS — The Edge

1G. **Framing Members* — Floor and Ceiling Runner —** For use with Item 2G, proprietary channel shaped runners, minimum width to accommodate stud size attached to floor and ceiling with fasteners 24 in. OC max.
STUDCO BUILDING SYSTEMS — CROCSTUD Track

1H. **Floor and Ceiling Runners —** (Not Shown) — Channel shaped, fabricated from min 0.02 in. galv steel, min width to accommodate stud size, with min 1 in. long legs, for use with studs specified below and fabricated from min 0.018 in. galv steel or thicker, attached to floor and ceiling with fasteners spaced max 24 in. OC.
MARINO/WARE, DIV OF WARE INDUSTRIES INC — Viper20™ Track VT100

IMPERIAL MANUFACTURING GROUP INC — Viper20™ Track VT100

1I. **Framing Members* — Floor and Ceiling Runners —** (Not Shown, As an alternate to Item 1) — For use with Items 2H, channel shaped, fabricated from min. 0.015 in. (min bare metal thickness) galvanized steel, attached to floor and ceiling with fasteners 24 in. OC. max.
TELLING INDUSTRIES L L C — TRUE-TRACK™

1J. **Framing Members* — Floor and Ceiling Runner —** Not Shown — In lieu of Item 1 — For use with Item 2I, proprietary channel shaped runners, 3-5/8 in. deep attached to floor and ceiling with fasteners 24 in. OC max.

1K. **Framing Members* — Floor and Ceiling Runner —** Not Shown — In lieu of Item 1 — For use with Item 2J, proprietary channel shaped runners, 1-1/4 in. wide by 3-5/8 in. deep fabricated from min 0.018 in. thick galv steel, attached to floor and ceiling with fasteners spaced 24 in. OC max.

1L. **Framing Members* — Floor and Ceiling Runner —** Not Shown — In lieu of Item 1 — For use with Item 2N, proprietary channel shaped runners, 1-1/4 in. wide by min. 3-1/2 in. deep fabricated from min 0.018 in. thick galv steel, attached to floor and ceiling with fasteners spaced 24 in. OC max.
RESCUE METAL FRAMING, L L C — AlphaTRAK

1M. **Framing Members* — Floor and Ceiling Runners —** Not Shown — As an alternate to Item 1 — For use with Item 2O, proprietary channel shaped runners, min width to accommodate stud size, galv steel, attached to floor and ceiling with fasteners spaced 24 in. OC max.
RONDO BUILDING SERVICES PTY LTD — Rondo Wall Track

1N. **Framing Members* — Floor and Ceiling Runners —** Not Shown — As an alternate to Item 1 — For use with Item 2P, proprietary channel shaped runners, min width to accommodate stud size, galv steel, attached to floor and ceiling with fasteners spaced 24 in. OC max.
OEG BUILDING MATERIALS — OEG Track

1O. **Framing Members* — Floor and Ceiling Runner —** Not Shown — In lieu of Item 1 — For use with Item 2Q, proprietary channel shaped runners, min width to accommodate stud size, fabricated from min. 25 MSG (0.018 in. min. bare metal thickness), attached to floor and ceiling with fasteners spaced 24 in. OC max.
CEMCO, LLC — Viper X Track

1P. **Framing Members* — Floor and Ceiling Runner —** (Not Shown — Alternate to Item 1) — For use with Item 2R, channel shaped runners pre-equipped with proprietary attachment clips. Min. 3-5/8 in. wide. Legs of top runners minimum 3-1/4 in. wide. Legs of bottom runners minimum 1-1/2 in. wide. Runners attached to floor and ceiling with fasteners 24 in. OC max.

HYPERFRAME INC - Hypertrack

1Q. **Framing Members* — Floor and Ceiling Runner —** Not Shown — In lieu of Item 1 — For use with Item 2S , proprietary channel shaped runners, min width to accommodate stud size, fabricated from min. 20 EQ/22 mils. (min. 0.0221 in. thick) galvanized steel, attached to floor and ceiling with fasteners spaced 24 in. OC max.

JJC INTERNATIONAL DISTRIBUTORS — Non-structural Tracks 3-5/8" and 6".

1R. **Framing Members* — Floor and Ceiling Runner —** Not Shown — In lieu of Item 1 — For use with Item 2T, proprietary channel shaped runners ,min width to accommodate stud size, fabricated from min. 25 MSG (0.018 in. min. bare metal thickness), attached to floor and ceiling with fasteners spaced 24 in. OC max

IRONLINE METALS LLC — Bantam Track.

2. **Steel Studs —** Channel shaped, fabricated from min 25 MSG corrosion-protected steel, min depth as indicated under Item 5, spaced a max of 24 in. OC. Studs to be cut 3/8 to 3/4 in. less than assembly height.

2A. **Steel Studs —** (As an alternate to Item 2, For use with Items 5B, 5E, 5H, 5J or Type ULIX) — Channel shaped, fabricated from min 20 MSG corrosion-protected or galv steel, 3-1/2 in. min depth, spaced a max of 16 in. OC. Studs friction-fit into floor and ceiling runners. Studs to be cut 5/8 to 3/4 in. less than assembly height.

2B. **Framing Members* - Steel Studs —** (As an alternate to Item 2, For use with Items 5C, 5I or Type ULIX) — Proprietary channel shaped studs, 3-5/8 in. deep spaced a max of 24 in. OC. Studs to be cut 3/4 in less than the assembly height and installed with a 1/2 in. gap between the end of the stud and track at the bottom of the wall. For direct attachment of gypsum board only.
CEMCO, LLC — Viper25™

CRACO MFG INC — SmartStud25™

MARINO/WARE, DIV OF WARE INDUSTRIES INC — Viper25™

IMPERIAL MANUFACTURING GROUP INC — Viper25™

2C. **Framing Members* — Steel Studs —** Not Shown — In lieu of Item 2 — proprietary channel shaped steel studs, min depth as indicated under Item 5, spaced a max if 24 in. OC, fabricated from min 0.018 in. thick galv steel. Studs cut 3/8 in. to 3/4 in. less in lengths than assembly heights.
CEMCO, LLC — Viper20™

MARINO/WARE, DIV OF WARE INDUSTRIES INC — Viper20™

IMPERIAL MANUFACTURING GROUP INC — Viper20™

2D. **Framing Members* — Steel Studs —** In lieu of Item 2 — Channel shaped studs, min depth as indicated under Item 5, spaced a max of 24 in. OC. Studs to be cut 3/4 in. less than assembly height.
ALLSTEEL & GYPSUM PRODUCTS INC — Type SUPREME D24/30EQD and Type SUPREME D20

CONSOLIDATED FABRICATORS CORP, BUILDING PRODUCTS DIV — Type SUPREME D24/30EQD and Type SUPREME D20

QUAIL RUN BUILDING MATERIALS INC — Type SUPREME D24/30EQD and Type SUPREME D20

SCAFCO STEEL STUD MANUFACTURING CO — Type SUPREME D24/30EQD and Type SUPREME D20

STEEL CONSTRUCTION SYSTEMS INC — Type SUPREME D24/30EQD and Type SUPREME D20

TELLING INDUSTRIES L L C — Type SUPREME D24/30EQD and Type SUPREME D20

UNITED METAL PRODUCTS INC — Type SUPREME D24/30EQD and Type SUPREME D20

2E. **Framing Members* — Steel Studs —** (Not Shown, As an alternate to Item 2) — For use with Items 5F or 5G or 5I or Type ULIX only, channel shaped studs, min depth as indicated under Item 5F, 5G or 5I, fabricated from min. 0.015 in. (min bare metal thickness) galvanized steel, spaced a max of 24 in. OC. Studs to be cut 3/4 in. less than assembly height.
CLARKDIETRICH BUILDING SYSTEMS — CD ProSTUD

DMFCWBS L L C — ProSTUD

MBA METAL FRAMING — ProSTUD

RAM SALES L L C — Ram ProSTUD

STEEL STRUCTURAL PRODUCTS L L C — Tri-S ProSTUD

2F. **Framing Members* — Steel Studs —** Not Shown — In lieu of Item 2 — proprietary channel shaped steel studs, minimum width indicated under Item 5, 1-1/4 in. deep fabricated from min 0.015 in. (min bare metal thickness) galvanized steel. Studs 3/8 in. to 3/4 in. less in lengths than assembly heights.
SUPER STUD BUILDING PRODUCTS — The Edge

2G. **Framing Members* — Steel Studs —** Not Shown — In lieu of Item 2 — proprietary channel shaped studs, minimum width indicated under Item 5, Studs to be cut 3/8 to 3/4 in less than the assembly height.
STUDCO BUILDING SYSTEMS — CROCSTUD

2H. **Framing Members* — Steel Studs —** (Not Shown, As an alternate to Item 2) — Fabricated from min. 0.015 in. (min bare metal thickness) galvanized steel, spaced a max of 24 in. OC. Studs to be cut 3/4 in. less than assembly height.
TELLING INDUSTRIES L L C — TRUE-STUD™

2I. **Framing Members* — Steel Studs —**

2J. **Framing Members* — Metal Studs —** Not Shown — In lieu of Item 2 — proprietary channel shaped steel studs, min depth as indicated under Item 5, spaced a max if 24 in. OC, fabricated from min 0.018 in. thick galv steel. Studs cut 3/8 in. to 3/4 in. less in lengths than assembly heights

2K. **Framing Members* — Steel Studs —** As an alternate to Item 2 — For use with Item 1, channel shaped studs, fabricated from min 25 MSG corrosion-protected steel, min depth as indicated under Item 5, spaced a max of 24 in. OC. Studs to be cut 3/8 to 3/4 in. less than assembly height.
EB METAL INC — NITROSTUD

2L. **Framing Members* — Steel Studs —** As an alternate to Item 2 — For use with Item 1, channel shaped studs, fabricated from min 25 MSG corrosion-protected steel, min depth as indicated under Item 5, spaced a max of 24 in. OC. Studs to be cut 3/8 to 3/4 in. less than assembly height.
OLMAR SUPPLY INC — PRIMESTUD

2M. **Framing Members* — Steel Studs —** As an alternate to Item 2 — For use with Item 1, channel shaped studs, fabricated from min 25 MSG corrosion-protected steel, min depth as indicated under Item 5, spaced a max of 24 in. OC. Studs to be cut 3/8 to 3/4 in. less than assembly height.
MARINO/WARE, DIV OF WARE INDUSTRIES INC — StudRite™

2N. **Framing Members*— Steel Studs —** As an alternate to Item 2 — proprietary channel shaped steel studs, min depth 3-1/2 in. and as indicated under Item 5, spaced a max of 24 in. OC, fabricated from min 0.018 in. thick galv steel. Studs cut 3/8 in. to 3/4 in. less in length than assembly height.

RESCUE METAL FRAMING, L L C — AlphaSTUD

2O. **Framing Members* — Steel Studs —** As an alternate to Item 2 — proprietary channel shaped steel studs, min width as indicated under Item 5, galv steel. Studs to be cut 3/8 to 3/4 in. less in lengths than assembly height. Spaced 24 in. OC max.
RONDO BUILDING SERVICES PTY LTD — Rondo Lipped Wall Stud

2P. **Framing Members* — Steel Studs —** As an alternate to Item 2 — proprietary channel shaped steel studs, min width as indicated under Item 5, min 25 MSG galv steel. Studs to be cut 3/8 to 3/4 in. less in lengths than assembly height. Spaced 24 in. OC max.
OEG BUILDING MATERIALS — OEG Stud

2Q. **Framing Members* — Steel Studs —** Not Shown — In lieu of Item 2 — For use with Item 1O, proprietary channel shaped steel studs, min depth as indicated under Item 5, spaced a max of 24 in. OC, fabricated from min 25 MSG (0.018 in. min. bare metal thickness). Studs cut 3/8 in. to 3/4 in. less in lengths than assembly heights.
CEMCO, LLC — Viper X

2R. **Framing Members* — Steel Studs —** (Not Shown — Alternate to Item 2, For use with Item 1P) — Channel shaped steel studs with attachment clips at top and bottom, min 3-5/8 in. depth, spaced a max of 24 in. OC. Studs clipped into floor and ceiling runners (Item 1P). Max 2-3/8 in. extension reveal from top of stud to inside of ceiling runner.

HYPERFRAME INC— Hyperstud

2S. **Framing Members* — Steel Studs —** Not Shown — In lieu of Item 2 — For use with Item 1Q, proprietary channel shaped steel studs, min depth as indicated under Item 5, spaced a max of 24 in. OC, fabricated from min. 20 EQ/22 mils. (min. 0.0221 in. thick) galvanized steel. Studs cut 3/8 in. to 3/4 in. less in lengths than assembly heights.

JJC INTERNATIONAL DISTRIBUTORS — Non-structural Studs 3-5/8" and 6".

2T. **Framing Members* — Steel Studs —** Not Shown — In lieu of Item 2 — For use with Item 1R, proprietary channel shaped steelstuds, min depth as indicated under Item 5, spaced a max of 24 in. OC, fabricated from min 25 MSG (0.018 in. min. bare metal thickness). Studs cut 3/8 in. to 3/4 in. less in lengths than assembly heights.

IRONLINE METALS LLC — Bantam Stud.

3. **Wood Structural Panel Sheathing —** (Optional, For use with Item 5 Only) — (Not Shown) — 4 ft wide, 7/16 in. thick oriented strand board (OSB) or 15/32 in. thick structural 1 sheathing (plywood) complying with DOC PS1 or PS2, or APA Standard PRP-108, manufactured with exterior glue, applied horizontally or vertically to the steel studs. Vertical joints centered on studs, and staggered one stud space from wallboard joints. Attached to studs with flat-head self-drilling tapping screws with a min. head diam. of 0.292 in. at maximum 6 in. OC. in the perimeter and 12 in. OC. in the field. When used, gypsum panels attached over OSB or plywood panels and fastener lengths for gypsum panels increased by min. 1/2 in.

4. **Batts and Blankets* —** (Required as indicated under Item 5) — Mineral wool batts, friction fitted between studs and runners. Min nom thickness as indicated under Item 5.
See **Batts and Blankets** (BKNV or BZJZ) Categories for names of Classified companies.

4A. **Batts and Blankets* —** (Optional – as an alternate to item 4) — Placed in stud cavities, any glass fiber or mineral wool insulation bearing the UL Classification Marking as to Surface Burning Characteristics and/or Fire Resistance.
See **Batts and Blankets** (BKNV or BZJZ) Categories for names of Classified companies.

4B. **Fiber, Sprayed* —** (Optional – as an alternate for items 4 or 4A, for use with Type ULIX) Where insulation is required - Spray applied granulated mineral fiber material. The fiber is applied with adhesive at a minimum density of 4.0 pcf to completely fill the wall cavity in accordance with the application instructions supplied with the product. See **Fiber, Sprayed** (CCAZ).
AMERICAN ROCKWOOL MANUFACTURING, LLC — Type Rockwool Premium Plus

4C. **Foamed Plastic* —** (As an alternate for items 4, 4A or 4B, for use with Item 5K) — Spray applied, foamed plastic insulation, at any thickness from partial fill to completely filling stud cavity, for 2 hour rated assemblies only. When foamed plastic is used, minimum stud depth shall be 3-1/2 in. with minimum 20 MSG steel thickness.

CARLISLE SPRAY FOAM INSULATION — Types SealTite ONE, SealTite Pro Closed Cell (CC), SealTite Pro Open Cell (OC), SealTite Pro OCX, SealTite Pro No Trim 21, SealTite Pro One Zero, Foamsulate Closed Cell, Foamsulate OCX, Foamsulate 70, and Foamsulate HFO.

4D. **Foamed Plastic* —** (As an alternate for items 4, 4A or 4B, for use with Item 5K) — Spray applied, foamed plastic insulation, at any thickness from partial fill to completely filling stud cavity, for up to 2 hour rated assemblies only. When foamed plastic is used, minimum stud depth shall be 3-1/2 in. with minimum 20 MSG steel thickness.

BASF CORP - Enertite® NM, Enertite® G, FE178®, Spraytite® 178, Spraytite® 81206, Walltite® 200, Walltite® US, Walltite® US-N, Walltite HP+, FE137®, FE158®, Spraytite® 158, Spraytite® SP, Spraytite® 81205, Spraytite® Comfort XL, Walltite® XL, Walltite® MAX, Walltite® LWP, Walltite® Plus and Enertite® Max

5. **Gypsum Board* —** Gypsum panels with beveled, square or tapered edges, applied vertically or horizontally. Vertical joints centered over studs and staggered one stud cavity on opposite sides of studs. Vertical joints in adjacent layers (multilayer systems) staggered one stud cavity. Horizontal joints need not be backed by steel framing. Horizontal edge joints and horizontal butt joints on opposite sides of studs need not be staggered. Horizontal edge joints and horizontal butt joints in adjacent layers (multilayer systems) staggered a min of 12 in. Horizontal edge joints and horizontal butt joints in adjacent layers (multilayer systems) with Type ULIX need not be staggered. The thickness and number of layers for the 1 hr, 2 hr, 3 hr and 4 hr ratings are as follows:

Gypsum Board Protection on Each Side of Wall

Rating, Hr	Min Stud Depth, in. Items 2, 2C, 2D, 2F, 2G, 2O	No. of Layers & Thkns of Panel	Min Thkns of Insulation (Item 4)
1	3-1/2	1 layer, 5/8 in. thick	Optional
1	2-1/2	1 layer, 1/2 in. thick	1-1/2 in.
1	1-5/8	1 layer, 3/4 in. thick	Optional
2	1-5/8	2 layers, 1/2 in. thick	Optional
2	1-5/8	2 layers, 5/8 in. thick	Optional
2	3-1/2	1 layer, 3/4 in. thick	3 in.
3	1-5/8	3 layers, 1/2 in. thick	Optional
3	1-5/8	2 layers, 3/4 in. thick	Optional
3	1-5/8	3 layers, 5/8 in. thick	Optional
4	1-5/8	4 layers, 5/8 in. thick	Optional
4	1-5/8	4 layers, 1/2 in. thick	Optional
4	2-1/2	2 layers, 3/4 in. thick	2 in.

CGC INC — 1/2 in. thick Type C, IP-X2 or IPC-AR; WRC, 5/8 in. thick Type AR, C, IP-AR, IP-X1, IP-X2, IPC-AR, SCX, SHX, ULIX, WRX or WRC; 3/4 in. thick Types IP-X3 or ULTRACODE

THE SIAM GYPSUM INDUSTRY (SONGKHLA) CO — 1/2 in. thick Type C and 5/8 in. thick Type SCX

UNITED STATES GYPSUM CO — 1/2 in. thick Type C, IP-X2, IPC-AR or WRC; 5/8 in. thick Type SCX, SGX, SHX, ULIX, WRX, IP-X1, AR, C, WRC, FRX-G, IP-AR, IP-X2, IPC-AR; 3/4 in. thick Types IP-X3 or ULTRACODE

USG BORAL DRYWALL SFZ LLC — 1/2 in. Type C; 5/8 in. Types C, SCX, SGX, ULTRACODE

USG MEXICO S A DE C V — 1/2 in. thick Type C, IP-X2, IPC-AR or WRC; 5/8 in. thick Type AR, C, IP-AR, IP-X1, IP-X2, IPC-AR, SCX, SHX, WRX, WRC or; 3/4 in. thick Types IP-X3 or ULTRACODE

When Item 7B, **Steel Framing Members***, is used, Nonbearing Wall Rating is limited to 1 Hr. Min. stud depth is 3-1/2 in., min. thickness of insulation (Item 4) is 3 in., and two layers of gypsum board panels (1/2 in. or 5/8 in. thick) shall be attached to furring channels as described in Item 6. One layer of gypsum board panels (1/2 in. or 5/8 in. thick) attached to opposite side of stud without furring channels as described in Item 6.

5A. **Gypsum Board* —** (As an alternate to Item 5) — 5/8 in. thick, 24 to 54 in. wide, applied horizontally as the outer layer to one side of the assembly. Secured as described in Item 6.
CGC INC — Type SHX.

UNITED STATES GYPSUM CO — Type FRX-G, SHX.

USG MEXICO S A DE C V — Type SHX.

5B. **Gypsum Board* —** (Not Shown) — As an alternate to Item 5 when used as the base layer on one or both sides of wall when 5/8 in or 3/4 in. thick products are specified. For direct attachment only to steel studs Item 2A, (not to be used with Item 3) — Nom 5/8 in. or 3/4 in. may be used as alternate to all 5/8 in. or 3/4 in. shown in Item 5, Wallboard Protection on Each Side of Wall table. Nom 5/8 in. or 3/4 in. thick lead backed gypsum panels with beveled, square or tapered edges, applied vertically. Vertical joints centered over studs and staggered min 1 stud cavity on opposite sides of studs. Gypsum board secured to 20 MSG steel studs Item 2A with 1-1/4 in. long Type S-12 steel screws spaced 8 in. OC at perimeter and 12 in. OC in the field. To be used with Lead Batten Strips (see Item 11) or Lead Discs or Tabs (see Item 12).
RAY-BAR ENGINEERING CORP — Type RB-LBG

5C. **Gypsum Board* —** (For Use With Item 2B) — Rating Limited to 1 Hour. 5/8 in. thick, 48 in. wide, Gypsum panels with beveled, square or tapered edges, applied vertically or horizontally. (Vertical Application) - The gypsum board is to be installed on each side of the studs with 1 in. long Type S coated steel screws spaced 8 in. OC starting 4 in. from the edge of the board at the vertical edges and 12 in. OC starting 6 in. from the edge of the board at the center of each board. Gypsum boards are to be secured to the top and bottom track with screws spaced 8 in. OC starting 4 in. from the board edge. Fasteners shall not penetrate through both the stud and the track at the same time. Vertical joints are to be centered over studs and staggered one stud cavity on opposite sides of studs. (Horizontal Application) - The gypsum board is to be installed on each side of the studs with 1 in. long Type S coated steel screws spaced 8 in. OC starting 4 in. from the edge of the board at the vertical edges and 12 in. OC starting 6 in. from the edge of the board at the center of each board. Gypsum boards are to be secured to the top and bottom track with screws spaced 8 in. OC starting 4 in. from the board edge. Fasteners shall not penetrate through both the stud and the track at the same time. All horizontal joints are to be backed as outlined under section VI of Volume 1 in the Fire Resistive Directory.
CGC INC — Type SCX, ULIX.

THE SIAM GYPSUM INDUSTRY (SONGKHLA) CO — Type SCX

UNITED STATES GYPSUM CO — Type SCX, SGX, ULIX.

USG BORAL DRYWALL SFZ LLC — Type SCX

USG MEXICO S A DE C V — Type SCX

5D. **Gypsum Board* —** (As an alternate to Item 5) — 5/8 in. thick, 48 in. wide, applied vertically or horizontally. Secured as described in Item 6. For use with Items 1 and 2 only.
CGC INC — Type USGX

UNITED STATES GYPSUM CO — Type USGX

USG BORAL DRYWALL SFZ LLC — Type USGX

USG MEXICO S A DE C V — Type USGX

5E. **Gypsum Board* —** (Not Shown) — (As an alternate to Item 5 when used as the base layer on one or both sides of wall when 1/2 in. or 5/8 in thick products are specified, For direct attachment only to steel studs Item 2A, not to be used with Item 3). Nominal 5/8 in. thick lead backed gypsum panels with beveled, square or tapered edges, applied vertically. Vertical joints centered over studs and staggered min 1 stud cavity on opposite sides of studs. Wallboard secured to studs with 1-1/4 in. long Type S-12 (or No. 6 by 1-1/4 in. long bugle head fine driller) steel screws spaced 8 in. OC at perimeter and 12 in. OC in the field.
NEW ENGLAND LEAD BURNING CO INC, DBA NELCO — Nelco

5F. **Gypsum Board* —** (As an alternate to Item 5) — For use with Items 1E and 2E and limited to 1 Hour Rating only, Gypsum panels with beveled, square or tapered edges, applied vertically, and fastened to the steel studs with 1 in. long Type S screws spaced 8 in. OC along vertical and bottom edges and 12 in. OC in the field. Vertical joints centered over studs and staggered one stud cavity on opposite sides of studs. Steel stud depth shall be a minimum 3-5/8 in.
THE SIAM GYPSUM INDUSTRY (SONGKHLA) CO — Type SCX

UNITED STATES GYPSUM CO — 5/8 in. thick Type SCX, SGX, ULIX

USG BORAL DRYWALL SFZ LLC — 5/8 in. thick Type SCX, SGX

5G. **Gypsum Board* —** (As an alternate to Item 5) — For use with Items 1E and 2E only, Gypsum panels with beveled, square or tapered edges, applied vertically or horizontally, as specified in the table below and fastened to the steel studs as described in Item 6. Vertical joints centered over studs and staggered one stud cavity on opposite sides of studs. Vertical joints in adjacent layers (multilayer systems) staggered one stud cavity. Horizontal joints need not be backed by steel framing. Horizontal edge joints and horizontal butt joints on opposite sides of studs need not be staggered. Horizontal edge joints and horizontal butt joints in adjacent layers (multilayer systems) staggered a min of 12 in. The thickness and number of layers for the 2 hr, 3 hr and 4 hr ratings are as follows:

Gypsum Board Protection on Each Side of Wall

Rating, Hr	Min Stud Depth, in. Item 2E	No. of Layers & Thickness of Panel	Min Thkns of Insulation (Item 4)
2	1-5/8	2 layers, 1/2 in. thick	Optional
2	1-5/8	2 layers, 5/8 in. thick	Optional
3	1-5/8	3 layers, 1/2 in. thick	Optional
3	1-5/8	3 layers, 5/8 in. thick	Optional
4	1-5/8	4 layers, 5/8 in. thick	Optional
4	1-5/8	4 layers, 1/2 in. thick	Optional

CGC INC — 1/2 in. thick Type C, IP-X2 or IPC-AR;, 5/8 in. thick Type AR, C, IP-AR, IP-X1, IP-X2, IPC-AR, SCX, SHX, ULIX or 3/4 in. thick Types IP-X3 or ULTRACODE

THE SIAM GYPSUM INDUSTRY (SONGKHLA) CO — 1/2 in. thick Types C and 5/8 in. thick SCX

UNITED STATES GYPSUM CO — 1/2 in. thick Type C, IP-X2, IPC-AR or; 5/8 in. thick Type SCX, SGX, SHX, IP-X1, AR, C, , FRX-G, IP-AR, IP-X2, IPC-AR, ULIX; 3/4 in. thick Types IP-X3 or ULTRACODE

USG BORAL DRYWALL SFZ LLC — 1/2 in. Type C; 5/8 in. Types C, SCX, SGX, ULTRACODE

USG MEXICO S A DE C V — 1/2 in. thick Type C, IP-X2, IPC-AR or; 5/8 in. thick Type AR, C, IP-AR, IP-X1, IP-X2, IPC-AR, SCX, SHX, or; 3/4 in. thick Types IP-X3 or ULTRACODE

5H. **Gypsum Board* —** (Not Shown) — (As an alternate to Item 5 when used as the base layer on one or both sides of wall when 5/8 or 3/4 in thick products are specified. For direct attachment only to steel studs Item 2A, (not to be used with Item 3) - Nom 5/8 or 3/4 in. may be used as alternate to all 5/8 or 3/4 in. shown in Item 5, Wallboard Protection on Each Side of Wall table. Nom 5/8 or 3/4 in. thick lead backed gypsum panels with beveled, square or tapered edges, applied vertically. Vertical joints centered over 20 MSG steel studs and staggered min 1 stud cavity on opposite sides of studs. Wallboard secured to studs with 1-1/4 in. long Type S-12 steel screws spaced 8 in. OC at perimeter and 12 in. OC in the field. Gypsum board secured to 20 MSG steel studs Item 2B with 1-1/4 in. long Type S-12 steel screws spaced 8 in. OC at perimeter and 12 in. OC in the field. For Joint Compound see Item 5. To be used with Lead Batten Strips (see Item 11A) or Lead Discs (see Item 12A).
MAYCO INDUSTRIES INC — Type X-Ray Shielded Gypsum

5I. **Gypsum Board* —** (As an alternate to Item 5) — Nom. 5/8 in. thick gypsum panels with beveled, square or tapered edges installed as described in Item 5. Steel stud minimum depth shall be as indicated in Item 5.
CGC INC — Type ULIX, ULX

UNITED STATES GYPSUM CO — Type ULIX, ULX

USG MEXICO S A DE C V — Type ULX

5J. **Gypsum Board* —** (Not Shown) — (As an alternate to Item 5 when used as the base layer on one or both sides of wall when 1/2 in. or 5/8 in thick products are specified, For direct attachment only to steel studs Item 2A, not to be used with Item 3). Nom 5/8 in. thick lead backed gypsum panels with beveled, square or tapered edges, applied vertically. Vertical joints centered over studs and staggered min 1 stud cavity on opposite sides of studs. Wallboard secured to studs with 1-1/4 in. long Type S-12 steel screws gypsum panel steel screws spaced 8 in. OC at perimeter and 12 in. OC in the field. Lead batten strips required behind vertical joints of lead backed gypsum wallboard and optional at remaining stud locations. Lead batten strips, min 2 in. wide, max 8 ft long with a max thickness of 0.14 in. placed on the face of studs and attached to the stud with construction adhesive and two 1 in. long Type S-12 pan head steel screws, one at the top of the strip and one at the bottom of the strip. Lead discs, nominal 3/8 in. diam by max 0.085 in. thick. Compression fitted or adhered over the screw heads. Lead batten strips and discs to have a purity of 99.9% meeting the Federal specification QQ-L-201f, Grade "C".
RADIATION PROTECTION PRODUCTS INC — Type RPP - Lead Lined Drywall

5K. **Gypsum Board* —** (As an alternate to Item 5 when Foam Plastic insulation (Items 4C or 4D) is used) — Any 5/8 in. thick, 4 ft. wide, Gypsum Board listed in Item 5 above. Applied vertically with vertical joints centered over studs and staggered one stud cavity on opposite sides of studs. Gypsum panels secured to studs with 1-1/4 in. long Type S steel screws spaced 8 in. OC at perimeter and in the field. For 2 layer assemblies outer layer will be attached to studs over inner layer with the 1-7/8 in. long steel screws spaced 8 in. OC.

6. **Fasteners —** (Not Shown) — For use with Items 2 and 2F - Type S or S-12 steel screws used to attach panels to studs (Item 2) or furring channels (Item 7). **Single layer systems:** 1 in. long for 1/2 and 5/8 in. thick panels or 1-1/4 in. long for 3/4 in. thick panels, spaced 8 in. OC when panels are applied horizontally, or 8 in. OC along vertical and bottom edges and 12 in. OC in the field when panels are applied vertically. **Single layer system with Type ULIX:** 1 in. long, spaced 12 in. OC in the field and perimeter, when panels are applied horizontally or vertically.**Two layer systems:** First layer- 1 in. long for 1/2 and 5/8 in. thick panels or 1-1/4 in. long for 3/4 in. thick panels, spaced 16 in. OC. Second layer- 1-5/8 in. long for 1/2 in., 5/8 in. thick panels or 2-1/4 in. long for 3/4 in. thick panels, spaced 16 in. OC with screws offset 8 in. from first layer.**Three-layer systems:** First layer- 1 in. long for 1/2 in., 5/8 in. thick panels, spaced 24 in. OC. Second layer- 1-5/8 in. long for 1/2 in., 5/8 in. thick panels, spaced 24 in. OC. Third layer- 2-1/4 in. long for 1/2 in., 5/8 in. thick panels or 2-5/8 in. long for 5/8 in. thick panels, spaced 12 in. OC. Screws offset min 6 in. from layer below. **Four-layer systems:** First layer- 1 in. long for 1/2 in., 5/8 in. thick panels, spaced 24 in. OC. Second layer- 1-5/8 in. long for 1/2 in., 5/8 in. thick panels, spaced 24 in. OC. Third layer- 2-1/4 in. long for 1/2 in. thick panels or 2-5/8 in. long for 5/8 in. thick panels, spaced 24 in. OC. Fourth layer- 2-5/8 in. long for 1/2 in. thick panels or 3 in. long for 5/8 in. thick panels, spaced 12 in. OC. Screws offset min 6 in. from layer below.

7. **Furring Channels —** (Optional, Not Shown, for single or double layer systems) — Resilient furring channels fabricated from min 25 MSG corrosion-protected steel, spaced vertically a max of 24 in. OC. Flange portion attached to each intersecting stud with 1/2 in. long Type S-12 steel screws. Not for use with Item 5A.

7A. **Framing Members* —** (Optional on one or both sides, not shown, for single or double layer systems) — As an alternate to Item 7, furring channels and Steel Framing Members as described below:
a. **Furring Channels —** Formed of No. 25 MSG galv steel. 2-9/16 in. or 2-23/32 in. wide by 7/8 in. deep, spaced max. 24 in. OC perpendicular to studs. Channels secured to studs as described in Item b. Gypsum board attached to furring channels as described in Item 6. Not for use with Item 5A.

b. **Steel Framing Members* —** Used to attach furring channels (Item 7Aa) to studs (Item 2). Clips spaced max. 48 in. OC. RSIC-1 and RSIC-1 (2.75) clips secured to studs with No. 8 x 1-1/2 in. minimum self-drilling, S-12 steel screw through the center grommet. RSIC-V and RSIC-V (2.75) clips secured to studs with No. 8 x 9/16 in. minimum self-drilling, S-12 steel screw through the center hole. Furring channels are friction fitted into clips. RSIC-1 and RSIC-V clips for use with 2-9/16 in. wide furring channels. RSIC-1 (2.75) and RSIC-V (2.75) clips for use with 2-23/32 in. wide furring channels.
PAC INTERNATIONAL L L C — Types RSIC-1, RSIC-V, RSIC-1 (2.75), RSIC-V (2.75).

7B. **Framing Members* —** (Optional, Not Shown) — As an alternate to Item 7, for single or double layer systems, furring channels and Steel Framing Members on only one side of studs as described below:
a. **Furring Channels —** Formed of No. 25 MSG galv steel, spaced 24 in. OC perpendicular to studs. Channels secured to studs as described in Item b. Batts and Blankets placed in stud cavity as described in Item 5. Two layers of gypsum board attached to furring channels as described in Item 5. Not for use with Item 5A.

b. **Steel Framing Members* —** Used to attach furring channels (Item 7Ba) to one side of studs (Item 2) only. Clips spaced 48 in. OC., and secured to studs with two No. 8 x 2-1/2 in. coarse drywall screws, one through the hole at each end of the clip. Furring channels are friction fitted into clips.
KINETICS NOISE CONTROL INC — Type Isomax

7C. **Framing Members* —** (Not Shown) — (Optional on one or both sides, not shown, for single or double layer systems) — As an alternate to Item 7, furring channels and Steel Framing Members as described below:
a. **Furring Channels —** Formed of No. 25 MSG galv steel. 2-3/8 in. wide by 7/8 in. deep, spaced max. 24 in. OC perpendicular to studs. Channels secured to studs as described in Item b. Gypsum board attached to furring channels as described in Item 6. Not for use with Item 5A.

b. **Steel Framing Members* —** Used to attach furring channels (Item 7Ca) to studs (Item 2). Clips spaced max. 48 in. OC. GENIECLIPS secured to studs with No. 8 x 1-1/2 in. minimum self-drilling, S-12 steel screw through the center grommet. Furring channels are friction fitted into clips.

PLITEQ INC — Type GENIECLIP

7D. **Steel Framing Members* —** (Optional on one or both sides, not shown, for single or double layer systems) — Furring channels and Steel Framing Members as described below:
a. **Furring Channels —** Formed of No. 25 MSG galv steel. Spaced 24 in. OC perpendicular to studs. Channels secured to studs as described in Item b. Ends of adjoining channels overlapped 6 in. and tied together with double strand of No. 18 AWG galvanized steel wire.. Gypsum board attached to furring channels as described in Item 6. Not for use with Item 5A.

b. **Steel Framing Members* —** Used to attach furring channels (Item 7Da) to studs. Clips spaced 48 in. OC., and secured to studs with 2 in. coarse drywall screw with 1 in. diam washer through the center hole. Furring channels are friction fitted into clips
STUDCO BUILDING SYSTEMS — RESILMOUNT Sound Isolation Clips - Type A237 or A237R

7E. **Steel Framing Members* —** (Optional on one or both sides, not shown, for single or double layer systems) — Furring channels and Steel Framing Members as described below:
a. **Furring Channels —** Formed of No. 25 MSG galv steel. Spaced 24 in. OC perpendicular to studs. Channels secured to studs as described in Item 7Eb. Ends of adjoining channels overlapped 6 in. and tied together with double strand of No. 18 AWG galvanized steel wire.. Gypsum board attached to furring channels as described in Item 6. Not for use with Item 5A and 5E.

b. **Steel Framing Members* —** Used to attach furring channels (Item 7Ea) to studs. Clips spaced 48 in. OC., and secured to studs with No. 8 x 2-1/2 in. coarse drywall screw through the center hole. Furring channels are friction fitted into clips.
REGUPOL AMERICA — Type SonusClip

7F. **Steel Framing Members* —** (Optional on one or both sides, not shown, for single or double layer systems) — Resilient channels and Steel Framing Members as described below:
a. **Resilient Channels —** Formed of No. 25 MSG galv steel, spaced 24 in. OC, and perpendicular to studs. Channels secured to studs as described in Item b. Ends of adjoining channels overlapped 6 in. and secured in place with two No. 8 15 x 1/2 in. Philips Modified Truss screws spaced 2-1/2 in. from the center of the overlap. Gypsum board attached to resilient channels as described in Item 5. Not for use with Item 5A and 5E.

b. **Steel Framing Members* —** Used to attach resilient channels (Item 7Fa) to studs. Clips spaced 48 in. OC., and secured to studs with No. 8 x 2-1/2 in. coarse drywall screw through the center hole. Resilient channels are secured to clips with one No. 10 x 1/2 in. pan-head self-drilling screw.
KEENE BUILDING PRODUCTS CO INC — Type RC+ Assurance Clip

7G. **Framing Members* —** (Optional on one or both sides, not shown, for single or double layer systems) — As an alternate to Item 7, furring channels and Steel Framing Members as described below:
a. **Furring Channels —** Formed of No. 25 MSG galv steel. 2-23/32 in. wide by 7/8 in. deep, spaced max. 24 in. OC perpendicular to studs. Channels secured to studs as described in Item b. Gypsum board attached to furring channels as described in Item 6. Not for use with Item 5A.

b. **Steel Framing Members* —** Used to attach furring channels (Item 7Ga) to studs (Item 2). Clips spaced max. 48 in. OC. Clips secured to studs with No. 8 x 1-1/2 in. minimum self-drilling, S-12 steel screw through the center hole. Furring channels are friction fitted into clips.
CLARKDIETRICH BUILDING SYSTEMS — Type ClarkDietrich Sound Clip

8. **Joint Tape and Compound —** Vinyl or casein, dry or premixed joint compound applied in two coats to joints and screw heads of outer layers. Paper tape, nom 2 in. wide, embedded in first layer of compound over all joints of outer layer panels. Paper tape and joint compound may be omitted when gypsum panels are supplied with a square edge.

9. **Siding, Brick or Stucco —** (Optional, Not Shown) — Aluminum, vinyl or steel siding, brick veneer or stucco, meeting the requirements of local code agencies, installed over gypsum panels. Brick veneer attached to studs with corrugated metal wall ties attached to each stud with steel screws, not more than each sixth course of brick.

10. **Caulking and Sealants* —** (Optional, Not Shown) — A bead of acoustical sealant applied around the partition perimeter for sound control.
UNITED STATES GYPSUM CO — Type AS

11. **Lead Batten Strips —** (Not Shown, For Use With Item 5B) — Lead batten strips, min 1-1/2 in. wide, max 10 ft long with a max thickness of 0.125 in. Strips placed on the interior face of studs and attached from the exterior face of the stud with two 1 in. long Type S-12 pan head steel screws, one at the top of the strip and one at the bottom of the strip. Lead batten strips to have a purity of 99.9% meeting the Federal specification QQ-L-201f, Grade "C". Lead batten strips required behind vertical joints of lead backed gypsum wallboard (Item 5B) and optional at remaining stud locations. Required behind vertical joints.

11A. **Lead Batten Strips —** (Not Shown, For Use With Item 5H) — Lead batten strips, 2 in. wide, max 10 ft long with a max thickness of 0.140 in. Strips placed on the face of studs and attached to the stud with two min. 1 in. long min. Type S-8 pan head steel screws, one at the top of the strip and one at the bottom of the strip or with one min. 1 in. long min. Type S-8 pan head steel screw at the top of the strip. Lead batten strips to have a purity of 99.5% meeting the Federal specification QQ-L-201f, Grades "B, C or D". Lead batten strips required behind vertical joints of lead backed gypsum wallboard and optional at remaining stud locations.

12. **Lead Discs or Tabs —** (Not Shown, For Use With Item 5B) — Used in lieu of or in addition to the lead batten strips (Item 11) or optional at other locations - Max 3/4 in. diam by max 0.125 in. thick lead discs compression fitted or adhered over steel screw heads or max 1/2 in. by 1-1/4 in. by max 0.125 in. thick lead tabs placed on gypsum boards (Item 5B) underneath screw locations prior to the installation of the screws. Lead discs or tabs to have a purity of 99.9% meeting the Federal specification QQ-L-201f, Grade "C".

12A. **Lead Discs —** (Not Shown, for use with Item 5H) — Max 5/16 in. diam by max 0.140 in. thick lead discs compression fitted or adhered over steel screw heads. Lead discs to have a purity of 99.5% meeting the Federal Specification QQ-L-201f, Grades "B, C or D".

13. **Lead Batten Strips —** (Not Shown, For Use With Item 5E) — Lead batten strips, 2 in. wide, max 10 ft long with a max thickness of 0.142 in. Strips placed on the face of studs and attached to the stud with two min. 1 in. long min. Type S-8 pan head steel screws, one at the top of the strip and one at the bottom of the strip or with one min. 1 in. long min. Type S-8 pan head steel screw at the top of the strip. Lead batten strips to have a purity of 99.9% meeting the Federal specification QQ-L-201f, Grade "C". Lead batten strips required behind vertical joints of lead backed gypsum wallboard (Item 5E) and optional at remaining stud locations.

14. **Lead Tabs —** (Not Shown, For Use With Item 5E) — 2 in. wide, 5 in. long with a max thickness of 0.142 in. Tabs friction-fit around front face of stud, the stud folded back flange, and the back face of the stud. Tabs required at each location where a screw (that secures the gypsum boards, Item 5E) will penetrate the steel stud. Lead tabs to have a purity of 99.9% meeting the Federal specification QQ-L-201f, Grade "C". Lead tabs may be held in place with standard adhesive tape if necessary.

15. **Barrier Mesh —** (Optional, Not Shown) - Attached to steel studs on one or both sides of the wall using Barrier Mesh Clips spaced at maximum 12 inches on center vertically, using a flat head type screw penetrating through the steel at least 3/8 of an inch. For Steel Studs less than 0.033 inches in thickness, use self-piercing screws. For Steel Studs equal to or greater than 0.033 inches in thickness, use steel drill screws (self-tapping). Gypsum Board (Item 5) to be installed directly over the Barrier Mesh using prescribed screw patterns with lengths increased by a minimum 1/8 in. Barrier Mesh may be installed with the long dimension of the diamond pattern positioned vertically or horizontally. Barrier Mesh joints may occur as butt joints at the framing members and secured using the Barrier Mesh Clips or occur in between framing members as overlapping joints secured using 18 SWG wire ties spaced a maximum 12 in. on center.
CLARKDIETRICH BUILDING SYSTEMS — Barrier Mesh, Barrier Mesh Clips

*** Indicates such products shall bear the UL or cUL Certification Mark for jurisdictions employing the UL or cUL Certification (such as Canada), respectively.**

Last Updated on 2024-06-14

The appearance of a company's name or product in this database does not in itself assure that products so identified have been manufactured under UL Solutions' Follow - Up Service. Only those products bearing the UL Mark should be considered to be Certified and covered under UL Solutions' Follow - Up Service. Always look for the Mark on the product.

UL Solutions permits the reproduction of the material contained in Product iQ subject to the following conditions: 1. The Guide Information, Assemblies, Constructions, Designs, Systems, and/or Certifications (files) must be presented in their entirety and in a non-misleading manner, without any manipulation of the data (or drawings). 2. The statement "Reprinted from Product iQ with permission from UL Solutions" must appear adjacent to the extracted material. In addition, the reprinted material must include a copyright notice in the following format: "©2025 UL LLC."

Susan Hatchell
Landscape Architecture, PLLC
711 W. North Street, Raleigh, NC 27603
p: 919-838-9600 f: 919-838-9700

Esse Architects
632 PERSHING ROAD | RALEIGH, NORTH CAROLINA 27608

UL DETAILS

LAKE MYRA COUNTY PARK
Wake County, NC

REVISIONS

Esse Architects P.A. Registered Architectural Corporation 52498 North Carolina Raleigh, NC

MIRANDA DOWNER POTTHOFF Registered Architect 11663 North Carolina Raleigh, NC
Signed by: Miranda Potthoff 1EC945A80B284B4...
7/27/2026

Date: 07/27/26

PC-G103

Docusign Envelope ID: 32A15876-0539-8E64-8387-FC53D2C72009

BXUV - Fire Resistance Ratings - ANSI/UL 263 Certified for United States
BXUV7 - Fire Resistance Ratings - CAN/ULC-S101 Certified for Canada
See General Information for Fire-resistance Ratings - ANSI/UL 263 Certified for United States
Design Criteria and Allowable Variances

See General Information for Fire Resistance Ratings - CAN/ULC-S101 Certified for Canada
Design Criteria and Allowable Variances

Design No. U415

February 14, 2022

Nonbearing Wall Ratings — 1, 2, 3 or 4 Hr
*** Indicates such products shall bear the UL or cUL Certification Mark for jurisdictions employing the UL or cUL Certification (such as Canada), respectively.**

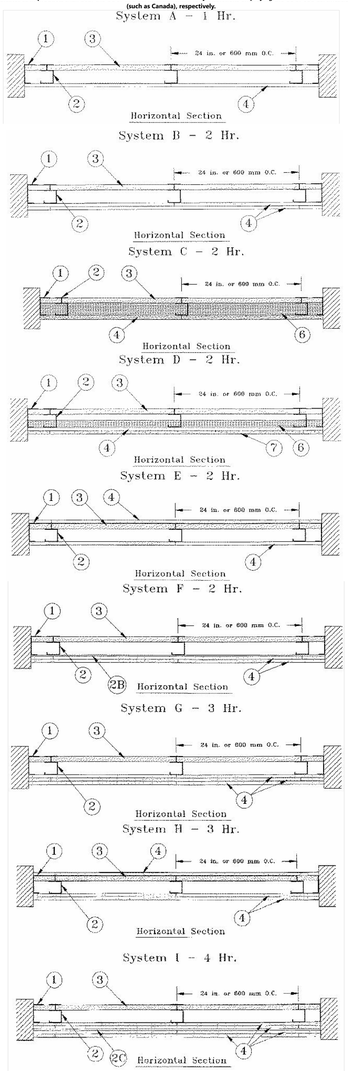

1. **Floor, Side and Ceiling Runners —** "J" - shaped runner, min 2-1/2 in. deep (min 4 in. deep when System C is used), with unequal legs of 1 in. and 2 in., fabricated from min 24 MSG (min 20 MSG when Item 4A, 4B, 4C, 4D or 7 are used) galv steel. Runners positioned with short leg toward finished side of wall. Runners attached to structural supports with steel fasteners located not greater than 2 in. from ends and not greater than 24 in. OC. "E" - shaped studs (Item 2A) may be used as side runners in place of "J" - shaped runners.

2. **Steel Studs —** "C-H" - shaped studs, min 2-1/2 in. deep (min 4 in. deep when System C is used), fabricated from min 25 MSG (min 20 MSG when Items 2D, 4A, 4B, 4C, 4D or 7 is used) galv steel. Cut to lengths 3/8 to 1/2 in. less than floor-to-ceiling height and spaced 24 in. or 600 mm OC (max 16 in. OC when Items 4A, 4B, 4C, or 4D are used).

2A. **Steel Studs —** (Not Shown) — "E" - shaped studs installed back to back in place of "C-H" - shaped studs (Item 2) "E" - shaped studs secured together with steel screws spaced a maximum 12 in. OC. Fabricated from min 25 MSG (min 20 MSG when Item 2D, 4A, 4B or 7 is used) galv steel, min 2-1/2 in. deep (min 4 in. deep when System C is used), with one leg 1 in. long and two legs 3/4 in. long. Shorter legs 1 in. apart to engage gypsum liner panels. Cut to lengths 3/8 to 1/2 in. less than floor to ceiling heights.

2B. **Furring Channels —** (Optional, Not Shown) — For use with single or double layer systems. Resilient furring channels fabricated from min 25MSG corrosion protected steel, installed horizontally, and spaced vertically a max 24 in. OC. Flange portion of channel attached to each intersecting "C-H" or "E" stud on side of stud opposite the 1 in. liner panels with 1/2 in. long Type S or S-12 pan-head steel screws. When furring channels are used, wallboard to be installed vertically only. . Not to be used with Type FRX-G gypsum board, lead backed gypsum boards (Items 4A-4D), or cementitious backer units (Item 7).

2C. **Furring Channels —** For use with System I - "Hat" - shaped, 25 MSG galv steel furring channels attached directly over the inner layers of wallboard to each stud with 2 in. long Type S pan head steel screws. Screws alternate from top flange to bottom flange at each stud intersection. Furring channels spaced vertically max 24 in. OC.

2D. **Steel Framing Members* —** (Optional, Not Shown) — For use with single or double layer systems. Furring channels and Steel Framing Members as described below. Not to be used with Type FRX-G gypsum board, lead backed gypsum boards (Items 4A-4D), or cementitious backer units (Item 7).
a. **Furring Channels —** Formed of No. 25 MSG galv steel. 2-9/16 in. or 2-23/32 in. wide by 7/8 in. deep, spaced max. 24 in. OC perpendicular to studs. Channels secured to studs as described in Item b. Gypsum board installed vertically only and attached to furring channels as described in Item 4.

b. **Steel Framing Members* —** Used to attach furring channels (Item 2Da) to studs (Item 2 or 2A). Clips spaced max. 24 in. OC., and secured to studs with No. 8 x 1-1/2 in. minimum self-drilling, S-12 steel screw through the center grommet. Furring channels are friction fitted into clips. RSIC-1 clip for use with 2-9/16 in. wide furring channels. RSIC-1 (2.75) clip for use with 2-23/32 in. wide furring channels.
PAC INTERNATIONAL I L L C — Types RSC-1, RSIC-1 (2.75)

2E. **Steel Framing Members* —** (Optional, Not Shown) — Furring channels and Steel Framing Members as described below. . Not to be used with Type FRX-G gypsum board, lead backed gypsum boards (Items 4A-4D), or cementitious backer units (Item 7).
a. **Furring Channels —** Formed of No. 25 MSG galv steel. Spaced 24 in. OC perpendicular to studs. Channels secured to studs as described in Item b. Ends of adjoining channels overlapped 6 in. and tied together with double strand of No. 18 AWG galvanized steel wire. Gypsum board attached to furring channels as described in Item 4.

b. **Steel Framing Members* —** Used to attach furring channels (Item 2Ea) to studs. Clips spaced 24 in. OC., and secured to studs with 2 in. coarse drywall screw with 1 in. diam washer through the center hole. Furring channels are friction fitted into clips.
STUDCO BUILDING SYSTEMS — RESILMOUNT Sound Isolation Clips - Type A237R

2F. **Steel Framing Members* —** (Optional, Not Shown) — For use with single or double layer systems. Furring channels and Steel Framing Members as described below. Not to be used with Type FRX-G gypsum board, lead backed gypsum boards (Items 4A-4D), or cementitious backer units (Item 7).
a. **Furring Channels —** Formed of No. 25 MSG galv steel. 2-3/8 in. wide by 7/8 in. deep, spaced max. 24 in. OC perpendicular to studs. Channels secured to studs as described in Item b. Gypsum board installed vertically only and attached to furring channels as described in Item 3.

b. **Steel Framing Members* —** Used to attach furring channels (Item 2Da) to studs (Item 2 or 2A). Clips spaced max. 24 in. OC. GENIECLIPS secured to studs with No. 8 x 1-1/2 in. minimum self-drilling, S-12 steel screw through the center grommet. Furring channels are friction fitted into clips.
PLITEQ INC — Type GENIECLIP

2G. **Steel Framing Members* —** (Optional, Not Shown) — Furring channels and Steel Framing Members as described below. Not to be used with Type FRX-G gypsum board, lead backed gypsum boards (Items 4A-4D), or cementitious backer units (Item 7).
a. **Furring Channels —** Formed of No. 25 MSG galv steel. Spaced 24 in. OC perpendicular to studs. Channels secured to studs as described in Item 2Gb. Ends of adjoining channels overlapped 6 in. and tied together with double strand of No. 18 AWG galvanized steel wire. Gypsum board attached to furring channels as described in Item 4.

b. **Steel Framing Members* —** Used to attach furring channels (Item 2Ga) to studs. Clips spaced 24 in. OC., and secured to studs with No. 8 x 2-1/2 in. coarse drywall screw through the center hole. Furring channels are friction fitted into clips.
REGUPOL AMERICA — Type SonusClip

2H. **Steel Framing Members* —** (Optional, Not Shown) — Resilient channels and Steel Framing Members as described below. Not to be used with Type FRX-G gypsum board, lead backed gypsum boards (Items 4A-4D), or cementitious backer units (Item 7).
a. **Resilient Channels —** Formed of No. 25 MSG galv steel, spaced 24 in. OC, and perpendicular to studs. Channels secured to studs as described in Item b. Ends of adjoining channels overlapped 6 in. and secured in place with two No. 8 15 x 1/2 in. Philips Modified Truss screws spaced 2-1/2 in. from the center of the overlap. Gypsum board attached to resilient channels as described in Item 4.

b. **Steel Framing Members* —** Used to attach resilient channels (Item 2Ha) to studs. Clips spaced 48 in. OC., and secured to studs with No. 8 x 2-1/2 in. coarse drywall screw through the center hole. Resilient channels are secured to clips with one No. 10 x 1/2 in. pan-head self-drilling screw.
KEENE BUILDING PRODUCTS CO INC — Type RC+ Assurance Clip

2I. **Steel Framing Members* —** (Optional, Not Shown) — For use with single or double layer systems. Furring channels and Steel Framing Members as described below. Not to be used with Type FRX-G gypsum board, lead backed gypsum boards (Items 4A-4D), or cementitious backer units (Item 7).
a. **Furring Channels —** Formed of No. 25 MSG galv steel, 2-23/32 in. wide by 7/8 in. deep, spaced max. 24 in. OC perpendicular to studs. Channels secured to studs as described in Item b. Gypsum board installed vertically only and attached to furring channels as described in Item 4.

b. **Steel Framing Members* —** Used to attach furring channels (Item 2Ia) to studs (Item 2 or 2A). Clips spaced max. 24 in. OC., and secured to studs with No. 8 x 1-1/2 in. minimum self-drilling, S-12 steel screw through the center grommet. Furring channels are friction fitted into clips.
CLARKDIETRICH BUILDING SYSTEMS — Type ClarkDietrich Sound Clip

3. **Gypsum Board* —** Gypsum liner panels, nom 1 in. thick, 24 in. or 600 mm (for metric spacing) wide. Panels cut 1 in. less in length than floor to ceiling height. Vertical edges inserted in "H" portion of "C-H" studs or the gap between the two 3/4 in. legs of the "E" studs. Free edge of end panels attached to long leg of vertical "J" - runners with 1-5/8 in. long Type S steel screws spaced not greater than 12 in. OC. When wall height exceeds liner panel length, liner panel may be butted to extend to the full height of the wall. Horizontal joints need not be backed by steel framing. In System I, butt joints in liner panels are staggered min 36 in. Butt joints backed with 6 in. by 22 in. strips of 3/4 in. thick gypsum wallboard (Item 4). Wallboard strips centered over butt joints and secured to liner panels with six 1-1/2 in. long Type G steel screws, three screws along the 22 in. dimension at the top and bottom of the strips.
CGC INC — Type SLX

UNITED STATES GYPSUM CO — Type SLX

USG BORAL DRYWALL SFZ LLC — Type SLX

USG MEXICO S A DE C V — Type SLX

4. **Gypsum Board* —**

System A — 1 Hr

Gypsum panels, with beveled, square or tapered edges, nom 5/8 in. thick, 48 in. or 1200 mm wide, applied vertically or horizontally, attached to studs with 1 in. long Type S steel screws spaced 12 in. when installed vertically or 8 in OC when installed horizontally. Horizontal joints need not be backed by steel framing.

CGC INC — Types AR, C, IP-AR, IP-X1, IP-X2, IPC-AR, SCX, SHX, ULIX, ULX, USGX, WRC, WRX

THE SIAM GYPSUM INDUSTRY (SONGKHLA) CO — Type C

UNITED STATES GYPSUM CO — Types AR, C, FRX-G, IP-AR, IP-X1, IP-X2, IPC-AR, SCX, SGX, SHX, ULIX, ULX, USGX, WRC, WRX, USGX.

USG BORAL DRYWALL SFZ LLC — Types C, SCX, SGX, USGX

USG MEXICO S A DE C V — Types AR, C, IP-AR, IP-X1, IP-X2, IPC-AR, SCX, SHX, ULIX, USGX, WRC, WRX

System B — 2 Hr

Gypsum panels, with beveled, square or tapered edges, nom 1/2 in. or 5/8 in. thick, 48 in. or 1200 mm wide, applied vertically or horizontally in two layers. Inner or base layer attached to studs with 1 in. long Type S steel screws spaced 24 in. OC when installed vertically or 16 in. OC when installed horizontally. Outer or face layer attached to studs with 1-5/8 in. long Type S steel screws spaced 12 in. OC when installed vertically and staggered 12 in. from base layer screws or 8 in. OC when installed horizontally and staggered 8 in. from base layer screws. Horizontal joints between inner and outer layers staggered a min of 12 in. Horizontal joints need not be backed by steel framing. Vertical joints centered over studs and staggered 24 in.

CGC INC — 1/2 in. Type C, IP-X2, IPC-AR or WRC; 5/8 in. Types AR, C, IP-AR, IP-X1, IP-X2, IPC-AR, SCX, SHX, ULX, USGX, WRC, WRX

THE SIAM GYPSUM INDUSTRY (SONGKHLA) CO — Types C and SCX

UNITED STATES GYPSUM CO — 1/2 in. Types C, IP-X2, IPC-AR, or WRC; 5/8 in. Types AR, C, FRX-G, IP-AR, IP-X1, IP-X2, IPC-AR, SCX, SGX, SHX, ULIX, ULX, USGX, WRC, WRX.

USG BORAL DRYWALL SFZ LLC — 1/2 in. Type C; 5/8 in. Types C, SCX, SGX, USGX

USG MEXICO S A DE C V — 1/2 in. Types C, IP-X2, IPC-AR or WRC; 5/8 in. Types AR, C, IP-AR, IP-X1, IP-X2, IPC-AR, SCX, SHX, ULX, USGX, WRC, WRX

System C — 2 Hr

Gypsum panels, with beveled, square or tapered edges, nom 3/4 in. thick, 48 in. or 1200 mm wide, applied vertically or horizontally, secured with 1-1/4 in. long Type S steel screws spaced 8 in. OC along vertical edges and 12 in. OC in the field when installed vertically or 8 in. OC along the vertical edges and in the field when installed horizontally. Horizontal joints need not be backed by steel framing. Screws along side joints offset 4 in. Requires min 4 in. deep framing per Items 1, 2 and 3. Requires min 3 in. thick mineral wool batts per Item 6.

CGC INC — Types IP-X3 or ULTRACODE

UNITED STATES GYPSUM CO — Types IP-X3 or ULTRACODE

USG BORAL DRYWALL SFZ LLC — Type ULTRACODE

USG MEXICO S A DE C V — Types IP-X3 or ULTRACODE

System D — 2 Hr

Gypsum panels, with beveled, square or tapered edges, nom 5/8 in. thick, 48 in. or 1200 mm wide, applied vertically or horizontally, attached directly to studs with 1 in. long Type S steel screws spaced 24 in. when installed vertically or 16 in. OC when installed horizontally. Horizontal joints need not be backed by steel framing .Requires face layer of 1/2 or 5/8 in. thick cementitious backer units per Item 7 and min 1-1/2 in. thick mineral wool batts per Item 6.

CGC INC — Types AR, C, IP-AR, IP-X1, IP-X2, IPC-AR, SCX, SHX, ULX, USGX, WRC, WRX

THE SIAM GYPSUM INDUSTRY (SONGKHLA) CO — Types C and SCX

UNITED STATES GYPSUM CO — Types AR, C, FRX-G, IP-AR, IP-X1, IP-X2, IPC-AR, SCX, SGX, SHX, ULIX, ULX, USGX, WRC, WRX.

USG BORAL DRYWALL SFZ LLC — Types C, SCX, SGX, USGX

USG MEXICO S A DE C V — Types AR, C, IP-AR, IP-X1, IP-X2, IPC-AR, SCX, SHX, ULIX, USGX, WRC, WRX

System E — 2 Hr

Gypsum panels, with beveled, square or tapered edges, nom 1/2 in. or 5/8 in. thick, 48 in. or 1200 mm wide, applied vertically or horizontally, attached to studs with 1 in. long Type S steel screws spaced 12 in. OC when installed vertically or 8 in. when installed horizontally. Horizontal joints need not be backed by steel framing.

CGC INC — 1/2 in. Types C, IP-X2, IPC-AR; 5/8 in. Types AR, C, IP-AR, IP-X1, IP-X2, IPC-AR, SCX, SHX, ULX, USGX, WRC, WRX

THE SIAM GYPSUM INDUSTRY (SONGKHLA) CO — Types C and SCX

UNITED STATES GYPSUM CO — 1/2 in. Types C, IP-X2, IPC-AR; 5/8 in. Types AR, C, FRX-G, IP-AR, IP-X1, IP-X2, IPC-AR, SCX, SGX, SHX, ULIX, ULX, USGX, WRC, WRX.

USG BORAL DRYWALL SFZ LLC — 1/2 in. Type C; 5/8 in. Types C, SCX, SGX, USGX

USG MEXICO S A DE C V — 1/2 in. Types C, IP-X2, IPC-AR; 5/8 in. Types AR, C, IP-AR, IP-X1, IP-X2, IPC-AR, SCX, SHX, ULX, USGX, WRC, WRX

System F — 2 Hr

Gypsum panels, with beveled, square or tapered edges, nom 1/2 in. or 5/8 in. thick, 48 in. or 1200 mm wide, applied vertically in two layers. Inner or base layer attached to resilient furring channels (Item 2B) with 1 in. long Type S steel screws spaced 24 in. Outer or face layer attached to resilient furring channels (Item 2B) with 1-5/8 in. long Type S steel screws spaced 12 in. OC and staggered 12 in. from base layer screws. Joints between inner and outer layers staggered 24 in.

CGC INC — 1/2 in. Type C, IP-X2, IPC-AR or WRC; 5/8 in. Types AR, C, FRX-G, IP-AR, IP-X1, IP-X2, IPC-AR, SCX, SHX, ULX, USGX, WRC, WRX

THE SIAM GYPSUM INDUSTRY (SONGKHLA) CO — Types C and SCX

UNITED STATES GYPSUM CO — 1/2 in. Type C, IP-X2, IPC-AR or WRC; 5/8 in. Types AR, C, FRX-G, IP-AR, IP-X1, IP-X2, IPC-AR, SCX, SGX, SHX, ULIX, ULX, USGX, WRC, WRX.

USG BORAL DRYWALL SFZ LLC — 1/2 in. Type C; 5/8 in. Types C, SCX

USG MEXICO S A DE C V — 1/2 in. Types C, IP-X2, IPC-AR; 5/8 in. Types AR, C, IP-AR, IP-X1, IP-X2, IPC-AR, SCX, SHX, ULX, USGX, WRC, WRX

System G — 3 Hr

Gypsum panels, with beveled, square or tapered edges, nom 5/8 in. thick, 48 in. or 1200 mm wide, applied vertically or horizontally in three layers. Inner or base layer attached to studs with 1 in. long Type S steel screws spaced 24 in. OC when installed vertically or 16 in OC when installed horizontally. Middle layer attached to studs with 1-5/8 in. long Type S steel screws spaced 24 in. when installed vertically or 16 in. OC when installed horizontally. Outer or face layer attached to studs with 2-1/4 in. long Type S steel screws spaced 16 in. when installed vertically or 12 in. OC when installed horizontally. Screws offset 6 in. from layer below. Horizontal joints on adjacent layers staggered a min of 12 in. . Horizontal joints need not be backed by steel framing. Vertical joints centered over studs and staggered 24 in. on adjacent layers.

CGC INC — Types C, IP-X2, IPC-AR, ULIX, WRC

THE SIAM GYPSUM INDUSTRY (SONGKHLA) CO — Type C

UNITED STATES GYPSUM CO — Types C, IP-X2, IPC-AR, ULIX, WRC

USG BORAL DRYWALL SFZ LLC — Type C

USG MEXICO S A DE C V — Types C, IP-X2, IPC-AR, WRC

System H — 3 Hr

Gypsum panels, with beveled, square or tapered edges, nom 5/8 in. thick, 48 in. or 1200 mm wide, applied vertically or horizontally, two layers over the flange of the "C" section of the studs, one layer over the flange of the "H" section of the studs. Inner or base layer attached to studs with 1 in. long Type S steel screws spaced 24 in. OC when installed vertically or 16 in. OC when installed horizontally. Face layer attached to studs with 1-5/8 in. long Type S steel screws spaced 16 in. when installed vertically or 12 in. OC when installed horizontally. Screws offset 6 in. from layer below. Horizontal joints on adjacent layers staggered a min of 12 in. Horizontal joints need not be backed by steel framing. Vertical joints centered over studs and staggered 24 in.

CGC INC — Types C, IP-X2, IPC-AR, ULIX, WRC

THE SIAM GYPSUM INDUSTRY (SONGKHLA) CO — Type C

UNITED STATES GYPSUM CO — Types C, IP-X2, IPC-AR, ULIX, WRC

USG BORAL DRYWALL SFZ LLC — Type C

USG MEXICO S A DE C V — Types C, IP-X2, IPC-AR, WRC

System I — 4 Hr

Gypsum panels, with beveled, square or tapered edges, nom 3/4 in. thick, 4 ft wide (or 1200 mm for metric spacing) wallboard with square or tapered edges. Total of four layers to be used. First and second (inner) layers applied vertically or horizontally over the steel studs. Horizontal joints need not be backed by steel framing. When applied vertically, joints centered over studs and staggered min 24 in., otherwise all joins staggered min 12 in. First layer secured to studs with 1-1/4 in. long Type S self-drilling, self-tapping bugle-head steel screws spaced 24 in. OC. Second layer secured to studs with 2-1/4 in. long Type S self-drilling, self-tapping bugle-head steel screws spaced 12 in. OC. Third layer applied vertically over the furring channels (Item 2C) with a 1-1/4 in. long Type S self-drilling, self-tapping bugle-head steel screws spaced 12 in. OC. Fourth layer applied vertically or horizontally with 2-1/4 in. long Type S self-drilling, self-tapping bugle-head steel screws spaced 12 in. OC. When applied vertically, joints to be staggered min 24 in. from third layer, otherwise all joints staggered min 12 in.

CGC INC — Types IP-X3 or ULTRACODE

UNITED STATES GYPSUM CO — Types IP-X3 or ULTRACODE

USG BORAL DRYWALL SFZ LLC — Type ULTRACODE

USG MEXICO S A DE C V — Types IP-X3 or ULTRACODE

4A. **Gypsum Board* —** (As an alternate to Item 4 Systems A, B, C, D, E, G, H, and I when used as the base layer, For direct attachment only) — Nom 5/8 in. or 3/4 in. thick lead backed gypsum panels with beveled, square or tapered edges, applied vertically. Vertical joints centered over 20 MSG steel studs and staggered min 1 stud cavity on opposite sides of studs. See Items 1, 2, 2A, 2B and 2D. Wallboard secured to studs with 1-1/4 in. long Type S-12 steel screws spaced 8 in. OC at perimeter and 12 in. OC in the field. For Joint Compound see Item 5. To be used with Lead Batten Strips (see Item 9) or Lead Discs or Tabs (see Item 10).
RAY-BAR ENGINEERING CORP — Type RB-LBG

4B. **Gypsum Board* —** (As an alternate to Item 4 Systems A, B, C, D, E, G, H, and I when used as the base layer, For direct attachment only) — Nominal 5/8 in. thick lead backed gypsum panels with beveled, square or tapered edges, applied vertically. Vertical joints centered over studs and staggered min 1 stud cavity on opposite sides of studs. Wallboard secured to studs with 1-1/4 in. long Type S-12 (or #6 by 1-1/4 in. long bugle head fine driller) steel screws spaced 8 in. OC at perimeter and 12 in. OC in the field.
NEW ENGLAND LEAD BURNING CO INC, DBA NELCO — Type Nelco

4C. **Gypsum Board* —** (As an alternate to Item 4 Systems A, B, C, D, E, G, H, and I when used as the base layer, For direct attachment only) — Nom 5/8 in and 3/4 in. thick lead backed gypsum panels with beveled, square or tapered edges, applied vertically. Vertical joints centered over 20 MSG steel studs and staggered min 1 stud cavity on opposite sides of studs. See Items 1, 2, 2A, 2B and 2D. Wallboard secured to studs with 1-1/4 in. long Type S-12 steel screws spaced 8 in. OC at perimeter and 12 in. OC in the field. For Joint Compound see Item 5. To be used with Lead Batten Strips (see Item 9A) or Lead Discs (see Item 10A). Lead batten strips required behind vertical joints of lead backed gypsum wallboard and optional at remaining stud locations. Lead batten strips, min 2 in. wide, max 10 ft long with a max thickness of 0.140 in. placed on the face of studs and attached to the stud with two 1 in. long Type S-8 pan head steel screws, one at the top of the strip and one at the bottom of the strip.
MAYCO INDUSTRIES INC — Type X-Ray Shielded Gypsum

4D. **Gypsum Board* —** (As an alternate to Item 4 Systems A, B, C, D, E, G, H, and I when used as the base layer, For direct attachment only) — Nom 5/8 in. thick lead backed gypsum panels with beveled, square or tapered edges, applied vertically. Vertical joints centered over studs and staggered min 1 stud cavity on opposite sides of studs. Wallboard secured to studs with 1-1/4 in. long Type S-12 steel screws gypsum panel steel screws spaced 8 in. OC at perimeter and 12 in. OC in the field. Lead batten strips required behind vertical joints of lead backed gypsum wallboard and optional at remaining stud locations. Lead batten strips, min 2 in. wide, max 8 ft long with a max thickness of 0.14 in. placed on the face of studs and attached to the stud with construction adhesive and two 1 in. long Type S-12 pan head steel screws, one at the top of the strip and one at the bottom of the strip. Lead discs, nominal 3/8 in. diam by max 0.085 in. thick. Compression fitted or adhered over the screw heads. Lead batten strips and discs to have a purity of 99.9% meeting the Federal specification QQ-L-201f, Grade "C".
RADIATION PROTECTION PRODUCTS INC — Type RPP - Lead Lined Drywall

5. **Joint Tape and Compound —** (Not Shown)

Systems A, B, C, E, F, G, H, I

Joints on outer layers of gypsum boards (Item 4 and 4A) covered with paper tape and joint compound. Paper tape and joint compound may be omitted when gypsum boards are supplied with square edges. Exposed screw heads covered with joint compound.

6. **Batts and Blankets* —**

Systems A, B, E, F, G, H, I

(Optional) — Mineral wool or glass fiber batts partially or completely filling stud cavity. Any mineral wool or glass fiber batt mineral bearing the UL Classification Marking as to Fire Resistance.

Systems C & D

Min 3 in. (System C) and min 1-1/2 in. (System D) thick mineral wool batts, friction fitted between the studs and floor and ceiling runners.

ROCKWOOL — Type AFB, min. density 1.8 pcf / 28.8 kg/m^3

THERMAFIBER/OWENS CORNING — Type SAFB, SAFB FF

7. **Cementitious Backer Units* —** (System D) — Nom 1/2 or 5/8 in. thick panels, square edge, attached to studs over gypsum wallboard with 1-5/8 in. long, Type S-12, corrosion resistant steel screws spaced 8 in. OC and staggered 8 in. from gypsum wall board screws. Joints covered with glass fiber mesh tape. Vertical joints staggered one stud cavity from gypsum wallboard joints. Horizontal joints staggered a min of 12 in. from the gypsum wallboard joints.
UNITED STATES GYPSUM CO — Type DCB

8. **Laminating Adhesive* —** (Optional, Not Shown) — Used to bond outer layer of Cementitious Backer Units (Item 7) to inner layers of Gypsum Board (Item 4) in System D. ANSI A136.1 Type 1 organic adhesive applied with 1/4 in. square notched trowel. See Adhesives (BYWR) in the Fire Resistance Directory or Adhesives (BILZ) in the Building Materials Directory for names of Classified companies.

9. **Lead Batten Strips —** (Not Shown, For Use With Item 4A) — Lead batten strips, min 1-1/2 in. wide, max 10 ft long with a max thickness of 0.125 in. Strips placed on the interior face of studs and attached from the exterior face of the stud with two 1 in. long Type S-12 pan head steel screws, one at the top of the strip and one at the bottom of the strip. Lead batten strips to have a purity of 99.9% meeting the Federal specification QQ-L-201f, Grade "C". Lead batten strips required behind vertical joints of lead backed gypsum wallboard (Item 4A) and optional at remaining stud locations. Required behind vertical joints.

9A. **Lead Batten Strips —** (Not Shown, for use with Item 4C) — Lead batten strips, 2 in. wide, max 10 ft long with a max thickness of 0.140 in. Strips placed on the face of studs and attached to the stud with two min. 1 in. long min. Type S-8 pan head steel screws, one at the top of the strip and one at the bottom of the strip or with one min. 1 in. long min. Type S-8 pan head steel screw at the top of the strip. Lead batten strips to have a purity of 99.5% meeting the Federal specification QQ-L-201f, Grades "B, C or D". . Lead batten strips required behind vertical joints of lead backed gypsum wallboard (Item 6) and optional at remaining stud locations.

10. **Lead Discs or Tabs —** (Not Shown, For Use With Item 4A) — Used in lieu of or in addition to the lead batten strips (Item 9) or optional at other locations . Max 3/4 in. diam by max 0.125 in. thick lead discs compression fitted or adhered over steel screw heads or max 1/2 in. by 1-1/4 in. by max 0.125 in. thick lead tabs placed on gypsum boards (Item 4A) underneath screw locations prior to the installation of the screws. Lead discs or tabs to have a purity of 99.9% meeting the Federal specification QQ-L-201f, Grade "C".

10A. **Lead Discs —** (Not Shown, for use with Item 4C) — Max 5/16 in. diam by max 0.140 in. thick lead discs compression fitted or adhered over steel screw heads. Lead discs to have a purity of 99.5% meeting the Federal Specification QQ-L-201f, Grades "B, C or D".

11. **Lead Batten Strips —** (Not Shown, For Use With Item 4B) — Lead batten strips, 2 in. wide, max 10 ft long with a max thickness of 0.142 in. Strips placed on the face of studs and attached to the stud with two min. 1 in. long min. Type S-8 pan head steel screws, one at the top of the strip and one at the bottom of the strip or with one min. 1 in. long min. Type S-8 pan head steel screw at the top of the strip. Lead batten strips to have a purity of 99.9% meeting the Federal specification QQ-L-201f, Grade "C". Lead batten strips required behind vertical joints of lead backed gypsum wallboard (Item 4B) and optional at remaining stud locations.

12. **Lead Tabs —** (Not Shown, For Use With Item 4B) — 2 in. wide, 5 in. long with a max thickness of 0.142 in. Tabs friction-fit around front face of stud, the stud folded back flange, and the back face of the stud. Tabs required at each location where a screw (that secures the gypsum boards, Item 4B) will penetrate the steel stud. Lead tabs to have a purity of 99.9% meeting the Federal specification QQ-L-201f, Grade "C". Lead tabs may be held in place with standard adhesive tape if necessary.

*** Indicates such products shall bear the UL or cUL Certification Mark for jurisdictions employing the UL or cUL Certification (such as Canada), respectively.**

Last Updated on 2022-02-14

The appearance of a company's name or product in this database does not in itself assure that products so identified have been manufactured under UL Solutions' Follow - Up Service. Only those products bearing the UL Mark should be considered to be Certified and covered under UL Solutions' Follow - Up Service. Always look for the Mark on the product.

UL Solutions permits the reproduction of the material contained in Product iQ subject to the following conditions: 1. The Guide Information, Assemblies, Constructions, Designs, Systems, and/or Certifications (files) must be presented in their entirety and in a non-misleading manner, without any manipulation of the data (or drawings). 2. The statement "Reprinted from Product iQ with permission from UL Solutions" must appear adjacent to the extracted material. In addition, the reprinted material must include a copyright notice in the following format: "©2025 UL LLC."

Susan Hatchell
Landscape Architecture, PLLC
711 W. North Street, Raleigh, NC 27603
p: 919-838-9600
f: 919-838-9700

Esse Architects
830 PERSHING ROAD | RALEIGH, NORTH CAROLINA 27608

UL DETAILS

LAKE MYRA COUNTY PARK
Wake County, NC

REVISIONS

Esse Architects P.A. Registered Architectural Corporation 52498 North Carolina Raleigh, NC

MIRANDA DONNER POTTHOFF Registered Architect 11863 North Carolina Raleigh, NC
Miranda Potthoff
7/27/2026

Date: 07/27/26

PC-G104

Docusign Envelope ID: 32A15876-0539-8E64-8387-FC53D2C72009

UL Solutions | **Product iQ®**

Design/System/Construction/Assembly Usage Disclaimer

- Authorities Having Jurisdiction should be consulted in all cases as to the particular requirements covering the installation and use of UL Certified products, equipment, system, devices, and materials.
- Authorities Having Jurisdiction should be consulted before construction.
- Fire resistance assemblies and products are developed by the design submitter and have been investigated by UL for compliance with applicable requirements. The published information cannot always address every construction nuance encountered in the field.
- When field issues arise, it is recommended the first contact for assistance be the technical service staff provided by the product manufacturer noted for the design. Users of fire resistance assemblies are advised to consult the general Guide Information for each product category and each group of assemblies. The Guide Information includes specifics concerning alternate materials and alternate methods of construction.
- Only products which bear UL's Mark are considered Certified.

BXUV - Fire Resistance Ratings - ANSI/UL 263 Certified for United States
BXUV7 - Fire Resistance Ratings - CAN/ULC-S101 Certified for Canada
See General Information for Fire-resistance Ratings - ANSI/UL 263 Certified for United States
Design Criteria and Allowable Variances

See General Information for Fire Resistance Ratings - CAN/ULC-S101 Certified for Canada
Design Criteria and Allowable Variances

Design No. D859

January 28, 2026

Restrained Assembly Ratings — 1, 1-1/2, 2 and 3 Hr.
(See Items 9, 9A, 9B, 9C)
Unrestrained Assembly Ratings — 1, 1-1/2, 2, 3 Hr.
(See Items 9, 9A, 9B, 9C)
Unrestrained Beam Ratings — 1, 1-1/2, 2, 3 Hr.
(See Items 9, 9A, 9B, 9C)
This design was evaluated using a load design method other than the Limit States Design Method (e.g., Working Stress Design Method). For jurisdictions employing the Limit States Design Method, such as Canada, a load restriction factor shall be used — See Guide BXUV or BXUV7

*** Indicates such products shall bear the UL or cUL Certification Mark for jurisdictions employing the UL or cUL Certification (such as Canada), respectively.**

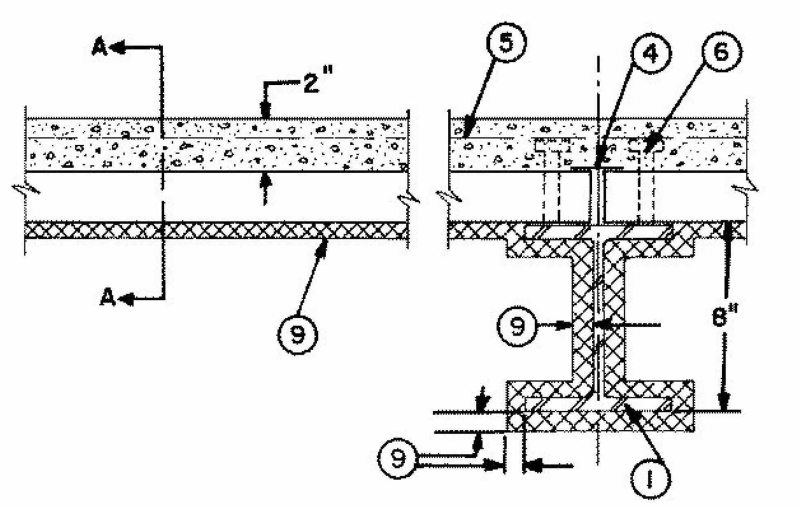

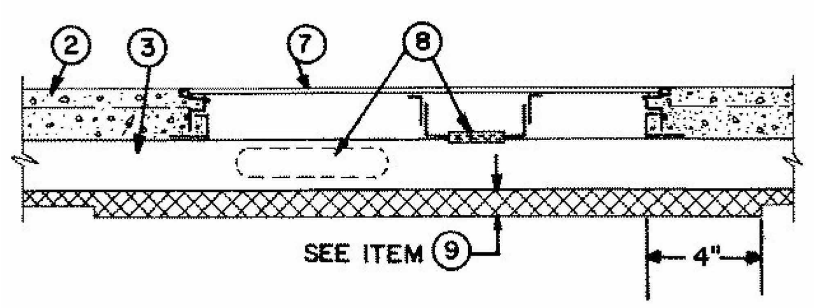

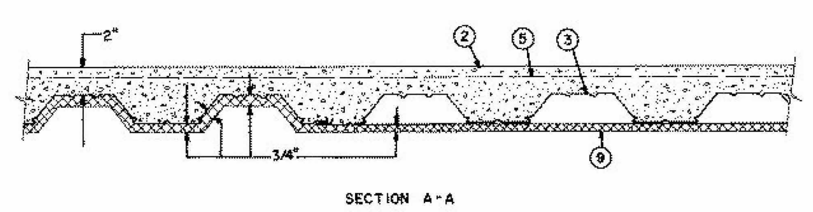

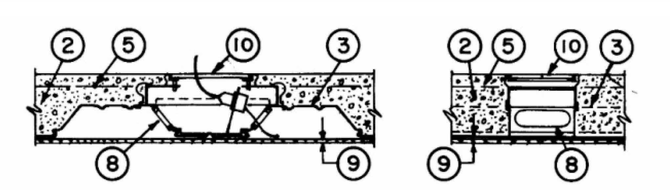

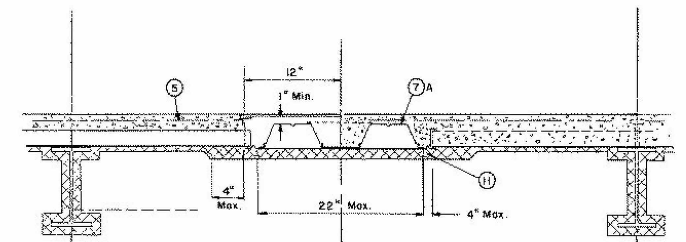

1. **Beam —** W8X20, min size.

2. **Normal Weight or Light Weight Aggregate Concrete —** Normal weight concrete, carbonate or siliceous aggregate, 145 (+ or -) 3 pcf unit weight, 3000 psi compressive strength, 4 to 7 percent entrained air, vibrated. Light weight concrete, expanded shale or slate aggregate by rotary-kiln method; or expanded clay aggregate by rotary-kiln or sintered-grate method, 113 (+2, -5) pcf unit weight, 3000 psi compressive strength, 4 to 7 percent entrained air, vibrated.

3. **Steel Floor and Form Units* —** Composite 2 or 3 in. deep galv units. Min gauges are 22 MSG for fluted and 20/20 MSG for cellular. For spans with trench headers the allowable loading shall be based on non-composite design. The following combination of units may be used: (1) All fluted; (2) All 24, 30 or 36 in. wide cellular; (3) Any blend of fluted and 24, 30 or 36 in. wide cellular; (4) One or two 12 in. wide cellular alternating with fluted or 24 and 36 in. wide cellular. Spacing of welds attaching units to supports shall not exceed 12 in. OC. Unless noted otherwise, adjacent units welded together 60 in. max along side joints.
ASC STEEL DECK, DIV OF ASC PROFILES L L C — 36 in. wide, Types 2WH-36, 2WHS-36, 2WHF-36, 2WHF-36A, 3WxH-36, 3WxHF-36, 3WxHF-36A, 3WH-36, 3WHF-36, 3WHF-36A, 3W-36, 3WF-36, DG3W-36, DG3WF-36. All units may be galvanized or Prime Shield. Non-cellular decks may be vented designated with a "V" suffix to the product name.

CANAM GROUP INC — 36 in. wide Type P-3623 composite; 24 in. wide Type P-2432 composite; 24 or 36 in. wide Type LF3. Type LF3 unit may be phos/ptd; 24 in. or 36 in. wide, Type LF2, vented Types LF2 and LF3.

KAM INDUSTRIES LTD, DBA CORDECK — QL Types, 12 in. wide TKC; 24 in.wide 2 or 3 in. 21, 99, 121, AKX, NKX, WKX, TKX, AKD, WKD; 36 in. wide 2 or 3 in. 99, AKX, WKX, AKD, WKD; 24 or 30 in. wide 3 in. QL-GKX, -GKXH, -GKX-A. Adjacent QL Types 2 or 3 in. 99, AKX, WKX, -GKX, -GKX-A, ADK, WKD, Metric units-QL-77-600, -77-900 and all QLC Type units may be screwed together 48 in. OC max along side joints (in lieu of welds 60 in. OC max) with 1 in. long, No. 10 self-tapping and self-drilling steel screws

CANAM STEEL CORP — 12, 24 or 36 in. wide Types LF2 or LF3; LFC2 or LFC3. Types LF2, LF3 may be phos/ptd

DECK WEST INC — 36 in. wide Type 2-DW or 3-DW

DECKCO LLC – 36 in. wide, Types DC 2 Form, DC 2 Composite, DC 3 Form, DC 3 Composite.

DESIGN ASSISTANCE CONSTRUCTION SYSTEMS INC — 24 in. wide Type DACS2.0CD, or DACS3.0CD

EPIC METALS CORP — 24 in. wide Types EC366, ECP366; 24 or 30 in. wide Types EPC2, EPC3; 36 in. wide Types EC266, ECP266

INTSEL STEEL EAST LLC — 36 in. wide Types 2" COMPOSITE/FLOOR, 3" COMPOSITE/FLOOR.

MARLYN STEEL DECKS INC — Type 1.5 CF, 2.0 CF or 3.0 CF

NEW MILLENNIUM BUILDING SYSTEMS L L C — 24 or 36 in. wide Types 2.0CD, 3.0CD, 2.0CFD, 3.0CFD, 3.0CFDES. Fluted units may be phos/painted or galvanized

STEEL MASTERS INTERNATIONAL DEPENDABLE STEEL — 36 in. wide Types 2WH-36, 3WH-36. Units may be phos/painted or galvanized.

VERCO DECKING INC - A NUCOR CO — FORMLOK™ deck types PLB, B, BR, PLN3, N3, PLN, N, PLW2, W2, PLW3, W3. Units are min 24 in. wide and may be galvanized or phos./ptd. Units may be cellular with the suffix "CD" added to the product name, respectively. All non-cellular deck may be vented or non-vented.

NEXT LEVEL DECKING, LLC — 36 in. wide Type FD2W-36 or FD3W-36

VULCRAFT, DIV OF NUCOR CORP — 24 or 36 in. wide Type 2VLI, 2.0PLVLI, 3VLI, 3.0PLVLI, 2VLP, 2.0PLVLP, 3VLP, 3.0PLVLP. Types 2VLI, 2.0PLVLI, 3VLI, 3.0PLVLI units may be phos./ptd. 24 or 36 in wide Types 2.0 SB, 3.0 SB; Units may be phos/ptd.

4. **Joint Cover —** 2 in. wide pressure-sensitive cloth tape applied following the contour of the steel floor units.

5. **Welded Wire Fabric —** 6 x 6 — W1.4 x W1.4.

6. **Shear Connector Studs — Optional** — Studs, 3/4 in. diam, headed type or equivalent per AISC Specifications. Welded to the top flange of beam through the steel floor units. Min 1/2 in. concrete cover over studs.

7. **Trench Header —** (Bearing the UL Listing Mark). Constructed of steel and provided with metal edge screeds. When the trench header is located near a support the load carrying capacity of the span may be based on the allowable moment or shear stress of the floor units at the edge of the trench header away from the support, or on the allowable composite moment or shear capacity of the slab at the center of the span, whichever governs.
As an alternate, trench headers (Bearing the UL Listing Mark) without the bottom pan may be used. The allowable superimposed load for spans with a bottomless trench header shall be based on non-composite design. The bottomless trench header, with a max width of 36 in., consists of two cell closers which conform to the contour of the floor units, placed along the sides of the desired trench header location and welded to the floor units. The side rails, consisting of extruded aluminum screeds secured to galv steel channels (min 18 MSG), are positioned over the cell closers, aligned, and welded or riveted to the cell closers and floor units. A separate U-shaped galv steel channel (min 18 MSG), serving as the power compartment, is welded or riveted to the floor units. Steel cover plates, 1/4 in. thick, shall be adequately secured to the side rails. In bottomless trench headers wider than 18 in., each side joint of the steel floor units shall be welded with a 1 in. long weld near the trench header centerline. For QL-GKX-24 or -30 cellular floor units only, a separate KED-PTS (UL Listed) power transition sleeve is secured to power compartment with one rivet or screw. The use of the bottomless trench header requires additional protection underneath the trench header. (See Item 9).

7A. **Feeder Duct System —** (As an alternate to Item 7). Consists of 3 in. deep, nom 24 in. wide, 20/18 MSG Type QL-WKM or WL-WKM-E cellular steel floor unit (Feeder duct) and nom 24 by 24 in. junction boxes. The valley between the two cells of the feeder duct may or may not be covered by a steel plate to form a third cell. Feeder duct installed at the same elevation and perpendicular to 2 or 3 in. deep fluted and/or cellular steel floor units which are cantilevered from support beams on one or both sides of the feeder duct.
The junction boxes consisting of extruded aluminum screeds, 18 galv steel compartment divider and 0.21 in. thick steel cover plate are used at intersections of 2 or 3 in. cellular units and the feeder duct, where desired, bottom tabs of the flute closures are fastened to the valleys of the 2 or 3 in. units and to the feeder duct with self-drilling tek fasteners, while the cover plate is retained in position by four latch clips, one near each corner of the plate. The height and the level of the aluminum screed are adjusted by four adjustment screws, two each on opposite sides. In between the junction boxes the ends of the 2 or 3 in. fluted and/or cellular units are covered with steel end closure angles tack-welded to the top of the units.

8. **Access Openings —** As required, with grommets.

9. **Spray-Applied Fire Resistive Materials* —** Applied by spraying with water, in several coats, to final untamped thicknesses shown on design sketch and in tables below, to steel surfaces which are free of dirt, oil or scale. Use of adhesive is required under bottomless trenches and on cellular units, optional on other conditions. Min avg untamped density is 13 pcf on beam and steel form units with min ind untamped density of 11 pcf for Types II, II HS, or DC/F. Min avg and min ind densities of 22 and 19 pcf, respectively, for Type HP. For method of density determination refer to Design Information Section.
ISOLATEK INTERNATIONAL — Type D-C/F, Type HP, Type II, Type II HS; Type EBS or Type X Adhesive

9A. **Spray-Applied Fire Resistive Materials* - As An Alternate to Item 9 —** Applied by mixing with water in accordance with instructions on each bag and applied in one or more coats to a final thickness as shown in table below to steel beam and fluted steel deck surface which is free of dirt, oil or scale. The area between the steel deck and the top flange of the steel beam shall be filled. Min average and min individual density is 15 and 14 pcf, respectively, for Types 300, 300AC, 300ES, 300HS, 300N, 3000, 3000ES and SB. For Types 400AC and 400ES min average and min individual density of 22 and 19 pcf, respectively.
BERLIN CO LTD — Type 300, Type 300ES, Type 300N or Type SB.

GREENTECH ASIA PACIFIC SDN BDH — Type 300, 300ES, or 300HS

GREENTECH THERMAL INSULATION PRODUCTS MFG CO L L C — Types 300, 300AC, or 400AC.

ISOLATEK INTERNATIONAL — Type 300, Type 300AC, Type 300ES, Type 300HS, Type 300N, Type SB, Type 400AC, Type 400ES, Type 3000 or Type 3000ES.

NEWKEM PRODUCTS CORP — Type 300, Type 300ES, Type 300N, or Type SB.

9B. **Spray-Applied Fire Resistive Materials*— As An Alternate to Item 9 A —** Applied by mixing with water and spraying in one or more coats to the thicknesses shown below, to steel surfaces which are clean and free of dirt, loose scale and oil. When fluted steel deck is used and the steel beam is sprayed with the thicknesses applicable to cellular or blended units, the area between the steel deck and the top flange of the steel beam shall be plugged. When metal lath is not required, Type PC Pre coat is required on all cellular units when Type 300TW is used. The Type PC Pre coat shall be applied to cover approximately 70 percent of the flat plate surface. Thickness of the Type PC Pre coat is included in the total thickness of the protection material. Min average and min individual density of 17.5 and 16 pcf, respectively for Type300TW. Min average and min individual density of 22 and 19 pcf, respectively for Type 400. For method of density determination, see Design Information Section, Sprayed Material. When Type 400 is used on cellular units, metal lath (Item 12) must be used.
BERLIN CO LTD — Type 400.

GREENTECH ASIA PACIFIC SDN BDH — Type 400

GREENTECH THERMAL INSULATION PRODUCTS MFG CO L L C — Type 400.

ISOLATEK INTERNATIONAL — Type 300TWor 400, Type PC.

NEWKEM PRODUCTS CORP — Type 400

Restrained Assembly Rating Hr	Concrete (Type) NW or LW	Min Required Unrestrained Beam Rating Hr	Min Mtl Thkns on Beam In.
1		1	1/2
1-1/2	NW or LW	1	1/2
2	NW or LW	1	1/2
3	NW or LW	1-1/2	7/8
—	NW or LW	2	1-1/16
—	LW	3	1-1/2
—	NW	3	1-3/8

Form Unit Type	Concrete Type	Min Mtl Thkns In. Crests	Valley	Flat Plate	Restrained & Unrestrained Assembly Rating Hr
(GENERAL FLOOR AREA)					
(1) 2 or 3 in. QL-21,	NW or	9/16	9/16	9/16	1
-99, -121; Metric	LW				
Units-QL-77-600,					
-77-900; QLC-78-600,					
-78-900; 2VLI, 3VLI;					
EC266, -366;					
P20LF, P30LF, P31LF;					
F2, F3; LF2, LF3;					
2W, 3W; W2, W3;					
212V-Grip, 312V-Grip,					
CFD-2, -3;					
QL-AKX, -NKX,					
-TKX, -WKX, -WKD,					
-GKX, -GKX-A; ECP-					
266; ECP366; EPC2,					
EPC3; LF2C,					
LF3C; C20LF, C30LF, C31LF,					
C33LF, C34LF; 2VLP, 3VLP;					
212VW2-Wireway, 312VW2-					
Wireway, 212VW3-Wireway,					
312VW3-Wireway; 2-DW, 3-DW;					
(2) QL-AKX, -AKD	NW	—	—	7/16	1
(3) QL-WKX, -WKD,	NW	—	—	3/8	1
-GKX, -GKX-A;					
Metric Units-					
QLC-78-600,					
-78-900					
(4) 2 or 3 in. QL-21, -99,	NW or	5/8	5/8	5/8	1-1/2
-121; Metric	LW				
Units-QL-77-					
600, -77-900;					
QLC-78-600, -78-					
900; EC266, EC366,					
P20LF, P30LF, P31LF;					
212V-Grip, 312V-Grip;					
CFD-2, -3; F2, F3;					
LF2, LF3; 2VLI, 3VLI;					
2W, 3W; W2,W3; QL-AKX,					
-NKX, -TKX, -WKD, -WKX,					
-AKD, -GKX, -GKX-A; ECP-					
266, ECP366; EPC2,					
EPC3; LF2C, LF3C; C20LF,					
C30LF, C31LF, C33LF,					
C34LF; 2VLP, 3VLP;					
212VW2-Wireway, 312VW2-					
Wireway, 212VW3-Wireway,					
312VW3-Wireway; 2-DW					
3-DW;					
(5) 2 or 3 in. QL-21,	NW or	3/4	3/4	3/4	2
-99, -121; Metric	LW				
Units-QL-77-600,					
-77-900; EC266, EC-					
366, P20LF, P30LF;					
F2, F3; LF2, LF3;					
2VLI, 3VLI, 2W, 3W; W2, W3;					
212V-Grip, 312V-Grip;					
CFD-2, -3; QL-AKX,					
-NKX, -TKX, -WKX,					
-AKD, -WKD, -GKX,					
-GKX-A, -78-900;					
ECP-266, -366, EPC2,					
EPC3; C20LF, C30LF,					
C31LF, C33LF, C34LF;					
2VLP, 3VLP;					
212VW2-Wireway, 312VW2-					
Wireway, 212VW3-Wireway,					
312VW3-Wireway;					
Metric Units-QLC-78-600;					
2-DW, 3-DW;					
(6) 2 or 3 in. QL-99;	NW or	1-1/4	1-1/8	1-1/8	3
QL-AKX, -WKX, -GKX,	LW				
-GKX-A,-AKD, -WKD					
Metric Units-					
QL-77-600, -77-					
900; QLC-78-600,					
-78-900; 2-DW, 3-DW;					
(STANDARD TRENCH HEADER)					
(7) 2 or 3 in. QL-99,	NW or	9/16	9/16	9/16+	1
QL-21, -121; Metric	LW				
Units-QL-77-600,					
-77-900; EC266,					
-366, P20LF, P30LF,					
P31LF; 2VLI, 3VLI;					
LF2C, LF3C; 2W, 3W; W2, W3;					
212V-Grip; 312V-Grip;					
CFD-2, -3; QL-AKX,					
-NKX, -TKX, -WKX,					
-GKX, -GKX-A,					
-AKD, -WKD;					
Metric Units-QLC-78-600,					
-78-900; ECP-266,					
ECP366, EPC2,					
EPC3; C20LF, C30LF,					
C31LF, C33LF, C34LF;					
2VLP, 3VLP;					
212VW2-Wireway, 312VW2-					
Wireway, 212VW3-Wireway,					
312VW3-Wireway; 2-DW, 3-DW;					
(8) 2 in. QL-99, EC266,	NW or	7/8	11/16	11/16+	1-1/2
P20LF; LF2, 2W; W2; 2VLI,	LW				
212V-Grip; CFD-2; QL-					
AKX, ECP266, EPC2;					
C20LF; LFC2; 2VLP;					
212VW2-Wireway, 212VW3-					
Wireway; 2-DW;					
(9) 3 in. QL-99; Metric	NW or	5/8	5/8	5/8+	1-1/2
Units-QL-77-600,					
-77-900; QLC-78-					
600, -78-900; EC366;					
P30LF; 3W; W3; 3VLI,	LW				
3122V-Grip; CFD-3, QL-WKX,					
-GKX, -GKX-A, -WKD;					
ECP366, EPC3; C30LF,					
C31LF; 3VLP; 312VW2-					
Wireway, 312VW3-Wireway;					
3-DW;					
(10) 3 in. QL-99; Metric	NW or	7/8++	3/4++	3/4++	2
Units-QL-77-600, -77-					
-900; QLC-78-600, -78-					
-900; EC366;					
P30LF, P31LF; 3W, W3, 3VLI,	LW				
312V-Grip; CFD-3; QL-WKX,					
-GKX, -GKX-A, -WKD; ECP366,					
EPC3; C30LF, C31LF; 3VLP;					
3-DW;					
(11) 2 in. -99, QL-21, -121;	NW	1-1/8++	7/8++	7/8++	2
EC266; P20LF, P33LF,	or				
P34LF; LF2, 2VLI,	LW				
2W; W2; 212V-					
Grip; CFD-2; QL-AKX,					
-NKX, -TKC, -TKX;					
ECP-266, EPC2; C20LF,					
C33LF, C34LF; LF2C,					
LF3C; 2VLP					
212VW2-Wireway, 212VW3-					
Wireway; 2-DW;					
(Bottomless					
Trench Header					
or Feeder Duct)					
(12) 2 or 3 in. QL-99;	NW	1-3/16	1	1+	1
Metric Units-QL-					
77-600, -77-900;					
QLC-78-600, -78-					
900; EC					
266, EC366; P20LF,	or				
P30LF, P31LF; LF2, LF3;	LW				
2VLI,3VLI, 2W, 3W; W2, W3;					
212V-Grip, 312V-Grip;					
CFD-2, -3; QL-AKX, -NKX,					
-TKX, -WKX, -GKX,					
-GKX-A, -AKD, -WKD;					
ECP266, -366, EPC2,					
-3; C20LF, C30LF, C31LF,					
C33LF, C34LF; LF2C, LF3C;					
2VLP, 3VLP, 212VW2-Wireway,					
312VW2-Wireway, 212VW3-					
Wireway, 312VW3-Wireway;					
2-DW, 3-DW;					
(13) 2 or 3 in. QL-99;	NW	1-1/2	1-1/4	1-1/4+	1-1/2
Metric Units-QL-77-					
600, -77-900; QLC-					
78-600, -78-900; EC					
266, EC366; P20LF,	or				
P30LF; LF2, LF3; 2W,	LW				
3W; W2, W3; 2VLI, 3VLI;					
212V-Grip, 312V-					
Grip; CFD-3, -2;					
QL-AKX, -NKX, -TKX,					
-WKX, -GKX, -GKX-A,					
-WKD;-AKD, ECP266, -366;					
EPC2, -3; C20LF,					
C30LF, C31LF, C33LF, C34LF;					
LF2C, -3C; 2VLP, 3VLP					
212VW2-Wireway, 312VW2-					
Wireway, 212VW3-Wireway,					
312VW3-Wireway; 2-DW, 3-DW;					
(14) 2 or 3 in. QL-21, -99,	NW	1-3/4++	1-3/8++	1-5/8++	2
-121; Metric Units-	or				
QL-77-600, -77-900;	LW				
QLC-78-600, -78-900;					
EC266, EC366,					
P20LF, P30LF, P33LF;					
LF2, LF3; 2VLI,					
3VLI; 2W, 3W; W2, W3;					
212V-Grip; 312V-Grip;					
CFD-2, -3;					
QL-AKX, -NKX, -TKC,					
-TKX, -WKX, -GKX,					
-GKX-A, -AKD, -WKD;					
ECP266, -366; EPC2,					
-3; C20LF, C30LF, C31LF,					
C33LF; LF2C, -3C; 2VLP,					
-3VLP; 212VW2-Wireway,					
312VW2-Wireway,					
212VW3-Wireway,					
312VW3-Wireway;2-DW, 3-DW;					
(15) 2 or 3 in. QL-99;	NW	2-1/2++	2-5/16++	2-5/16++	3#
Metric Units-QL-					
77-600, -77-900;					
QLC-78-600, -78- 900;					
QL-AKX, -WKX, -GKX,					
-GKX-A, -AKD,-WKD; 2-DW, 3-DW;					
(Under Epic Metals Corp., EPC20-I or EPC30-I Electrical Inserts.)					
EPC2 or EPC3	NW	—	—	5/8	1
EPC2 or EPC3	NW	—	—	15/16	1-1/2
EPC2 or EPC3	NW	—	—	13/16	2
EPC2 or EPC3	NW	—	—	1-13/16++	3
(Under KAM INDUSTRIES LTD, DBA CORDECK — Tapmate II or II-EA Electrical Inserts)					
QL-AKX, -WKX;	NW	—	—	3/8	1
Metric Units-					
QLC-78-600,					
-78-900					
QL-AKX, -WKX;	NW	—	—	15/16	1-1/2
Metric Units-					
QLC-78-600,					
-78-900					
QL-AKX, -WKX;	NW	—	—	13/16	2
Metric Units-					
QLC-78-600,					
-78-900					
QL-AKX, -WKX;	NW	—	—	1-13/16++	3#
Metric Units-					
QLC-78-600,					
-78-900					
(Under KAM INDUSTRIES LTD, DBA CORDECK — Tapmate II-FN or II-EAFN Electrical Inserts)					
QL-WKX; Metric	NW	—	—	5/8	1
Units-QLC-78-600,					
-78-900					
QL-AKX	NW	—	—	9/16	1
QL-AKX, -WKX;	NW	—	—	5/8	1-1/2
Metric Units-					
QLC-78-600,					
-78-900					
QL-AKX, -WKX;	NW	—	—	3/4	2
Metric Units-					
QLC-78-600,					
-78-900					
QL-AKX, -WKX;	NW	—	—	1-1/8	3#
Metric Units-					
QLC-78-600,					
-78-900					
(Under KAM INDUSTRIES LTD, DBA CORDECK — Tapmate III FN or III EAFN Electrical Inserts)					
QL-WKD; Metric	NW	—	—	7/16	1
Units-QLC-78-600,					
-78-900, -78-A-					
600, -78-B-600,					
-78-C-900, -78-					
E-900, -78-F-900					
QL-AKD	NW	—	—	9/16	1
QL-AKD, -WKD;	NW	—	—	5/8	1-1/2
Metric Units-QLC-					
78-600, -78-900,					
78-A-600, -78-B-					
600, -78-C-900,					
-78-E-900, -78-					
F-900					
QL-AKD, -WKD;	NW	—	—	3/4	2
Metric Units-QLC-					
78-600, -78-900,					
78-A-600, -78-B-					
600, -78-C-900,					
-78-E-900, -78-					
F-900					
QL-AKD, -WKD;	NW	—	—	1-1/8	3
Metric Units-QLC-					
78-600, -78-900,					
78-A-600, -78-B-					
600, -78-C-900,					
-78-E-900,					
-78-F-900					
(Under **BHP Steel Building Products USA Inc.** Electrical Inserts)					
ASC3	NW	—	—	13/16	2

Unrestrained Assembly Rating is 2 Hr.

\+ Steel studs and discs (Item 11A) required for Types 300, 300TW, 300ES, 300N, or SB (Item 9B). When Type 400 is used on cellular deck, metal lath (Item 12) is required.

++ Metal lath (Item 11A) required for Types 300, 300TW, 300ES, 300N, SB, or 400 (Item 9B).

10. **Electrical Inserts —** Classified as **"Outlet Boxes and Fittings Classified for Fire Resistance."** *

(1) **KAM INDUSTRIES LTD, DBA CORDECK** Inserts.

(Tapmate II, -II-EA, -II-FN, -II,EAFN; Series KEB)

Installed per accompanying installation instructions over factory-punched holes in 24 or 36 in. wide QL Types AKX, WKX, and Metric Units QLC Types steel floor units. Spacing shall be not more than one insert in each 7-1/2 sq ft of floor area with not less than 25-1/2 in. between edges of adjacent inserts. Required material thickness (see Item 9) on floor units with inserts shall be sprayed the entire length and width of units between supports and extended beyond the edge of inserts onto adjacent floor units for a horizontal width of 12 in. The holes cut in insert cover for passage of wires shall be no more then 1/8 in. layer diam than the wire. For abandonment of Tapmate inserts, see installation instructions. Abandonment requires use of KEB-PC or -PCL insert cover with no holes in it (for all Tapmate inserts), or an abandonment plate for Tapmate II only, or a KEB-PC2 or -PC2-A1 abandonment cover for Tapmate II-EA and II-EAFN only.

The Tapmate II-FN insert may use KEB-HP-1 outlet box fittings in lieu of the KEB-PC flush cover fittings.

Tapmate III, FN, III, EAFN; Series KEC.

Installed per accompanying installation instructions over factory-punched holes in 24 or 36 in. wide QL Types AKD, WKD and Metric Units-QLC Types steel floor units. Spacing shall be not more than one insert in each 7-1/2 sq ft of floor area with not less than 25-1/2 in. between edges of adjacent inserts. Required Material thickness (see Item 9) on floor units with inserts shall be sprayed the entire length and width of units between supports and extended beyond the edge of inserts onto adjacent floor units for a horizontal width of 12 in. The holes cut in insert cover for passage of wires shall be no more than -1/8 in. larger diam than the wire. For abandonment of Tapmate inserts, see installation instructions.

The Tapmate III insert may use KEB-HP-1; Series KEC outlet box fittings with the same hourly rating, insert spacing and fireproofing thicknesses as specified for the Tapmate III-EAFN electrical inserts.

KAM INDUSTRIES LTD, DBA CORDECK — Tapmate II, -II-EA, -II-FN, -II-EAFN; Series KEB, Tapmate III-FN, -III-EAFN; Series KEC.

11. **Steel Studs With Discs —** The stud consists of No. 12 SWG steel wire, 5/8, 7/8 or 1-1/4 in. long for 1, 1-1/2 and 2 hr. protection thicknesses, respectively, with one end welded to 1-3/16 in. diam, No. 28 MSG steel disc. The ends of the studs opposite the discs shall be welded to the feeder duct in rows running parallel with the feeder duct. The distance between the outer rows of the studs and the edge of the feeder duct shall not exceed 4 in. The spacing between the rows shall not exceed 22 in. The spacing between studs in each row shall not exceed 24 in.

11A. **Steel Studs With Discs —** (Not Shown) — For use on cellular steel floor and form units under the trench headers with Types 300, 300TW, 300ES, 300N, or SB (Item 9B). The stud consists of No. 12 SWG steel wire, 1-1/4 in. long with one end welded to 1-1/2 in. diam, No. 28 MSG galvanized steel disc. The total number of studs shall average at least one stud per 250 sq in. The ends of the studs opposite the discs shall be welded to the cellular units in rows parallel with the trench header.The distance between the outer rows of the studs and the edge of the trench header shall not exceed 8-1/2 in. The spacing between the rows shall not exceed 9-1/2 in. The spacing between studs in each row shall not exceed 12 in.

12. **Metal Lath —** (Not shown) — For use with Types 300, 300TW, 300ES, 300N or SB (Item 9B) on fluted and cellular steel floor and form units under the trench-headers where thicknesses in the tables are noted by "++". Also requires on cellular units when inserts are used and thicknesses in the tables are noted by "++". Also required on all cellular units when Type 400 is used — 3/8 in. diamond, expanded steel weighing 3.4 lb per sq yd, secured to the underside of the trench-header. The width of the lath shall extend a min of 1-1/2 in. on either side of the trench-header. The lath is to be placed with the ribs upward and secured with S-12 by 3/8 in. long panhead, self-drilling, self-tapping steel screws spaced max 12 in. O.C. Steel screws to be fitted with 1/2 in. diam steel washers.

*** Indicates such products shall bear the UL or cUL Certification Mark for jurisdictions employing the UL or cUL Certification (such as Canada), respectively.**

Last Updated on 2026-01-28

UL Solutions permits the reproduction of the material contained in Product iQ subject to the following conditions: 1. The Guide Information, Assemblies, Constructions, Designs, Systems, and/or Certifications (files) must be presented in their entirety and in a non-misleading manner, without any manipulation of the data (or drawings). 2. The statement "Reprinted from Product iQ with permission from UL Solutions" must appear adjacent to the extracted material. In addition, the reprinted material must include a copyright notice in the following format: "©2026 UL LLC."

Susan Hatchell
Landscape Architecture, PLLC
711 W. North Street, Raleigh, NC 27603
p: 919-838-9600 f: 919-838-9700

Esse Architects
632 PERSHING ROAD | RALEIGH, NORTH CAROLINA 27608

UL DETAILS

LAKE MYRA COUNTY PARK
Wake County, NC

REVISIONS

Esse Architects P.A. Registered Architectural Corporation 52498 North Carolina Raleigh, NC

MIRANDA DOWNER POTTHOFF Registered Architect 11663 North Carolina Raleigh, NC
Signed by: Miranda Potthoff 1EC945A30B284B4...
7/27/2026

Date: 07/27/26

PC-G105

Docusign Envelope ID: 32A15876-0539-8E64-8387-FC53D2C72009

System No. HW-D-0016

June 13, 2011

Assembly Ratings — 1 and 2 Hr (See Item 2)

Nominal Joint Width — 1 In.

Class II and III Movement Capabilities — 25% Compression (See Item 2)

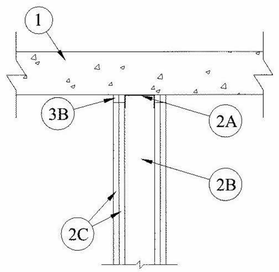

1. **Floor Assembly** — Min 4-1/2 in. (114 mm) thick reinforced lightw eight or normal w eight (100-150 pcf (1600-2400 kg/m^3)) structural concrete.

2. **Wall Assembly** — The 1 or 2 h fire-rated gypsum bo ard/steel stud w all assembly shall be constructed of the materials and in the manner described in the individual U400 or W400 Series Wall and Partition Designs in the UL Fire Resistance Directory and shall include the follo wing construction features:

A. **Steel Floor and Ceiling Runners** — Floor runners of w all assembly shall consist of galv steel channels sized to accommodate steel studs (Item 2B). Ceiling runners of w all assembly shall consist of min No. 26 gauge galv steel channels sized to accommodate steel studs (Item 2B). Ceiling runners to be provided w ith 2 in. (51 mm) flanges. Ceiling runner secured to low er surface of floor w ith steel fasteners spaced max 7 in. (178 mm) OC.

A1. **Light Gauge Framing —Floor and Ceiling Runners —** As an alternate to the ceiling and floor runners in Item 2A and 2A1, floor and ceiling runners to consist of galv steel channel sized to accommodate the **Light Gauge Framing* Slotted Stud** (Item 2B1) or **Light Gauge Framing* Slider C-Clip System** (Item 2B2). Floor and ceiling runners to be provided with min 1-1/4 in. (32 mm) and 3 in. (76 mm) flanges, respectively. Ceiling runner secured to lower surface of floor with steel fasteners spaced max 12 in. (305 mm) OC.

STEELER INC — Floor and Ceiling Runners

A3. **Light Gauge Framing* - Slotted Ceiling Runner —** As an alternate to the ceiling runner in Items 2A, 2A1 and 2A2, slotted ceiling runner to consist of galv steel channel with slotted flanges sized to accommodate steel studs (Item 2B). Ceiling runner secured to concrete floor with steel fasteners spaced max 24 in. (610 mm) OC.

SCAFCO STEEL STUD MANUFACTURING CO

BRADY CONSTRUCTION INNOVATIONS INC, DBA SLIPTRACK SYSTEMS — SLP-TRK

STEELER INC — Steeler Slotted Ceiling Runner

TELLING INDUSTRIES L L C — True-Action Deflection Track

A4. **Light Gauge Framing*- Notched Ceiling Runner —** As an alternate to the ceiling runners in Items 2A through 2A3, notched ceiling runners to consist of C-shaped galv steel channel with notched return flanges sized to accommodate steel studs (Item 2B). Notched ceiling runner secured to concrete floor slab with steel masonry anchors spaced max 24 in. (610 mm) OC. When notched ceiling runner is used, deflection channel (Item 3A) shall not be used.

OLMAR SUPPLY INC — Type SCR

A5. **Light Gauge Framing* —Vertical Deflection Clip —** (Optional) Steel clips can be used in conjunction with steel studs (Item 2B) or ceiling runner (Item 2A). Clips installed over the top of studs and inserted within the ceiling runner. Clip shall be secured to the ceiling runner with No. 8 self drilling, self tapping steel fasteners through holes provided within the clip. Clip may be secured to the stud with No. 6 pan head steel screw through holes provided within the clip. As an alternate, the legs of the clip may be installed over the top of the stud without attachment in accordance with manufacturer's installation instructions.

FLEX-ABILITY CONCEPTS L L C — Three Legged Dog Deflection Clip

B. **Studs —** Steel studs to be min 2-1/2 in. (64 mm) wide. Studs cut 1 in. (25 mm) less in length than assembly height with bottom nesting in and resting on floor runner and with top nesting in ceiling runner without attachment. When slotted ceiling runner (Item 2A3) is used, steel studs secured to slotted ceiling runner with No. 8 by 1/2 in. (13 mm) long wafer head steel screws at midheight of slot on each side of wall. Stud spacing not to exceed 24 in. (610 mm) OC.

B1. **Light Gauge Framing* —Slotted Studs —** Slotted steel stud to be used in conjunction with **Light Gauge Framing* —Floor and Ceiling Runners** (Item 2A4). Slotted steel studs to be min 2-1/2 in. (64 mm) wide. Slotted steel studs cut 1 in. (25 mm) less in length than assembly height with bottom nesting in and secured to both ceiling and floor runners. Ceiling runner secured to preformed slot within steel stud by means of No. 10 by 3/4 in. (19 mm) long low profile head steel screw. Floor runner attached to bottom of steel stud by means of No. 8 by 1/2 in. (13 mm) long pan head steel screw. Slotted steel stud spacing not to exceed 24 in. (610 mm) OC.

STEELER INC — Slotted Stud

B2. **Light Gauge Framing* —Slider C-Clip System —** As an alternate to the **Light Gauge Framing* —Slotted Steel Studs** (Item 2B1), a Slider C-Clip System consisting of a C shaped steel clip with a slotted opening and a steel stud to be used in conjunction with **Light Gauge Framing —Floor and Ceiling Runners** (Item 2A2). Steel clips and studs to be min 2-1/2 in. (64 mm) wide. Steel clip inserted into inside flange of steel stud without attachment. Total length of steel stud cut 1 in. (25 mm) less than assembly height with bottom of steel stud nesting in and secured to floor runner. Floor runner attached to bottom of steel stud by means of No. 8 by 1/2 in. (13 mm) long pan head steel screw. Ceiling runner secured to steel C-Clip by means of No. 10 by 3/4 in. (19 mm) long pan head steel screw located 3/8 in. (10 mm) below top of ceiling runner. Top row of gypsum board screws shall be centered within the preformed slot of the C-Clip. Steel stud and steel clips spacing not to exceed 24 in. (610 mm) OC.

STEELER INC — Slider C Clip System

C. **Gypsum Board* —** Gypsum board sheets installed to a min total thickness of 5/8 or 1-1/4 in. (16 or 32 mm) on each side of wall for a 1 or 2 h fire rated wall, respectively. Wall to be constructed as specified in the individual Wall and Partition Design in the UL Fire Resistance Directory, except that a max 1 in. (25 mm) gap shall be maintained between the top of the gypsum board and the lower surface of the floor. The top row of screws shall be installed into the studs 4 in. (102 mm) below the lower surface of the floor. The hourly fire rating of the joint system is equal to the hourly fire rating of the wall.

The hourly fire rating of the joint system is equal to the hourly fire rating of the wall. The movement capability of the joint system is Class II and III except that when the vertical deflection clip (Item 2A5) is used, the movement capability is Class II only.

3. **Joint System — Max separation between bottom of floor and top of wall (at time of installation of joint system) is 1 in. (25 mm). The joint system is designed to accommodate a max 25 percent compression from its installed width.** The joint system consists of a packing or forming material and a fill material between the top of the wallboard and the bottom of the floor, as follows:

A. **Packing Material —** (Optional, Not Shown)—For 2 h rated systems, two layers of nom 7/8 in. (22 mm) diam polyurethane backer rod friction-fitted on top of each other into the gap between the top of the gypsum board and the bottom of the concrete floor on both sides of the wall and recessed from each surface of wall to accommodate the required thickness of fill material.

A1. **Forming Material* —** (Optional, Not Shown)—For 2 h rated systems, min 3/4 in. (19 mm) width of 4 pcf (64 kg/m^3) mineral wool batt insulation compressed 50 percent in thickness and packed into the gap between the top of the gypsum board

and bottom of the floor on both sides of the wall.

INDUSTRIAL INSULATION GROUP L L C — MinWool-1200 Safing

ROCK WOOL MANUFACTURING CO — Delta Board or Delta-8

ROCKWOOL MALAYSIA SDN BHD — Type Safe

ROXUL INC — Type Safe

THERMAFIBER INC — Type SAF

B. **Fill, Void or Cavity Material* —** A min 1/2 in. (13 mm) thickness of fill material installed on each side of the wall between the top of the gypsum board and bottom of the concrete floor. As an option for 1 hr systems and in 2 hr systems where packing material (Item 3A) or forming material (Item 3B) are not used, bond breaker tape may be applied to ceiling runner on each side of wall .

TREMCO INC — TREMstop Acrylic or Fyre-Sil

*** Indicates such products shall bear the UL or cUL Certification Mark for jurisdictions employing the UL or cUL Certification (such as Canada), respectively.**

Susan Hatchell
Landscape Architecture, PLLC
711 W. North Street, Raleigh, NC 27603
p: 919-838-9600 f: 919-838-9700

Esse Architects
630 PERSHING ROAD | RALEIGH, NORTH CAROLINA 27608

UL DETAILS

LAKE MYRA COUNTY PARK
Wake County, NC

REVISIONS

Esse Architects P.A. Registered Architectural Corporation 52498 North Carolina Raleigh, NC

MIRANDA DONNER POTHOFF Registered Architect 11663 Signed by: Miranda Pothoff 1EC9A8A8B828488... North Carolina Raleigh, NC 7/27/2026

Date: 07/27/26

PC-G106

Docusign Envelope ID: 8BDE9837-570C-8E6A-8205-A6B2A1B21988

NOTE: APPEARANCE OF GRADE IS APPROXIMATE - SEE SITE/CIVIL SHEETS FOR GRADING PLANS

1 PC-A000 PARK CENTER - FRONT VIEW

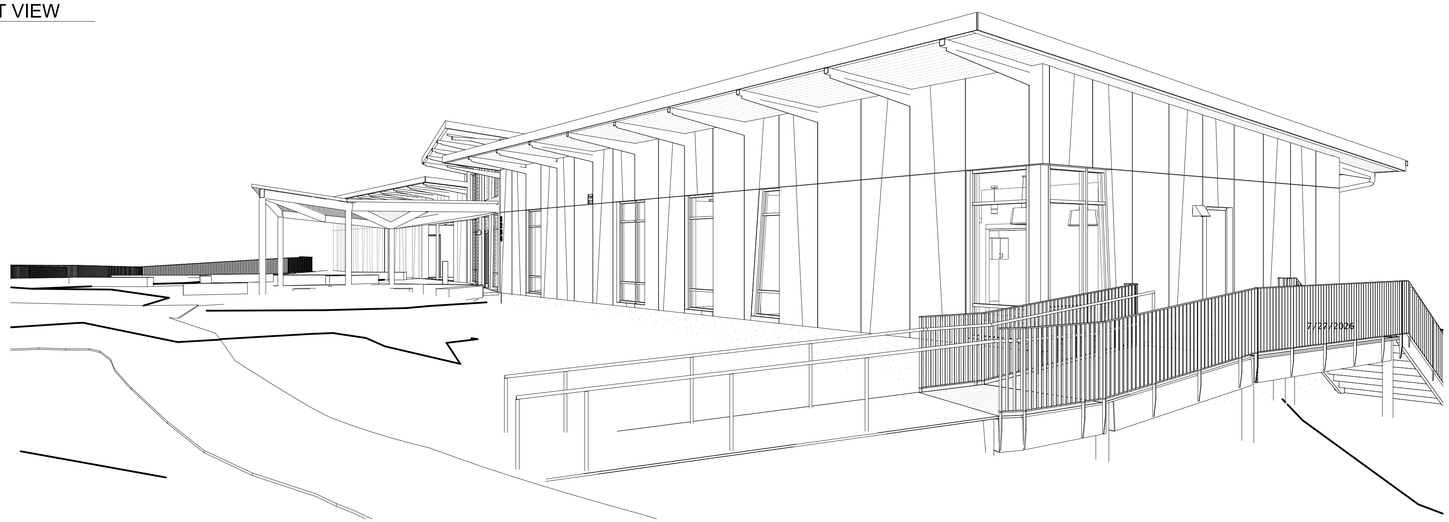

2 PC-A000 PARK CENTER - APPROACH VIEW

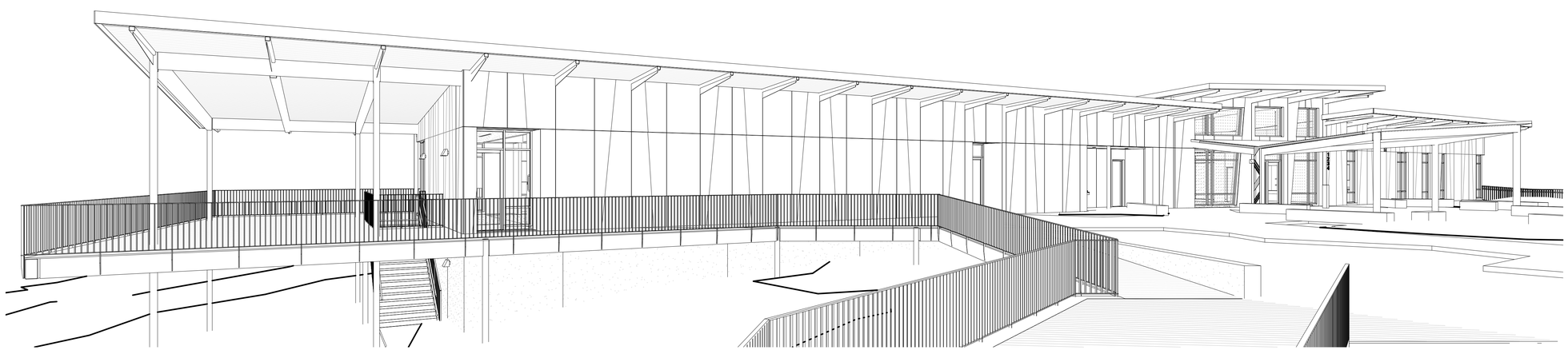

3 PC-A000 PARK CENTER - BOARDWALK VIEW

Susan Hatchell
Landscape Architecture, PLLC
711 W. North Street, Raleigh, NC 27603
p: 919-838-9600 f: 919-838-9700

Esse Architects
632 PERSHING ROAD | RALEIGH, NORTH CAROLINA 27608

3D VIEWS

LAKE MYRA COUNTY PARK
Wake County, NC

REVISIONS

Esse Architects P.A.
Registered Architectural Corporation
52498
North Carolina
Raleigh, NC

MIRANDA DOWNNER POTTHOFF
Registered Architect
11663
North Carolina
Raleigh, NC
7/27/2026
Miranda Potthoff

Date: 07/27/26

PC-A000

Docusign Envelope ID: 8BDE9837-570C-8E6A-8205-A6B2A1B21988

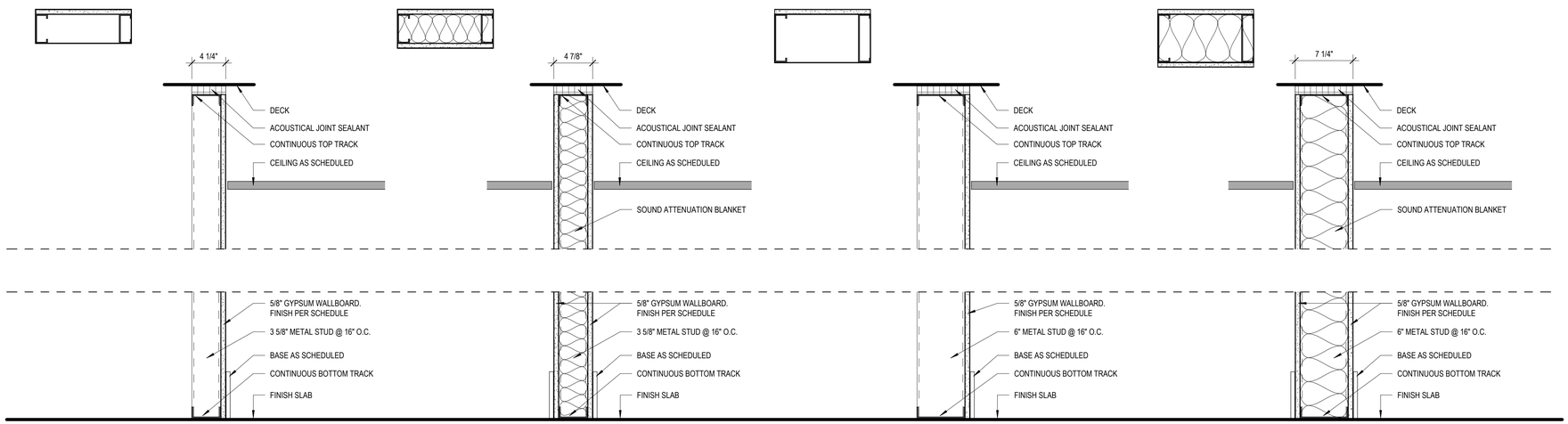

3 5/8" METAL STUD PARTITION, 5/8" GWB. ONE SIDE TO DECK

3 5/8" METAL STUD PARTITION, 5/8" GWB. EACH SIDE TO DECK

6" METAL STUD PARTITION, 5/8" GWB. ONE SIDE TO DECK

6" METAL STUD PARTITION, 5/8" GWB. EACH SIDE TO DECK

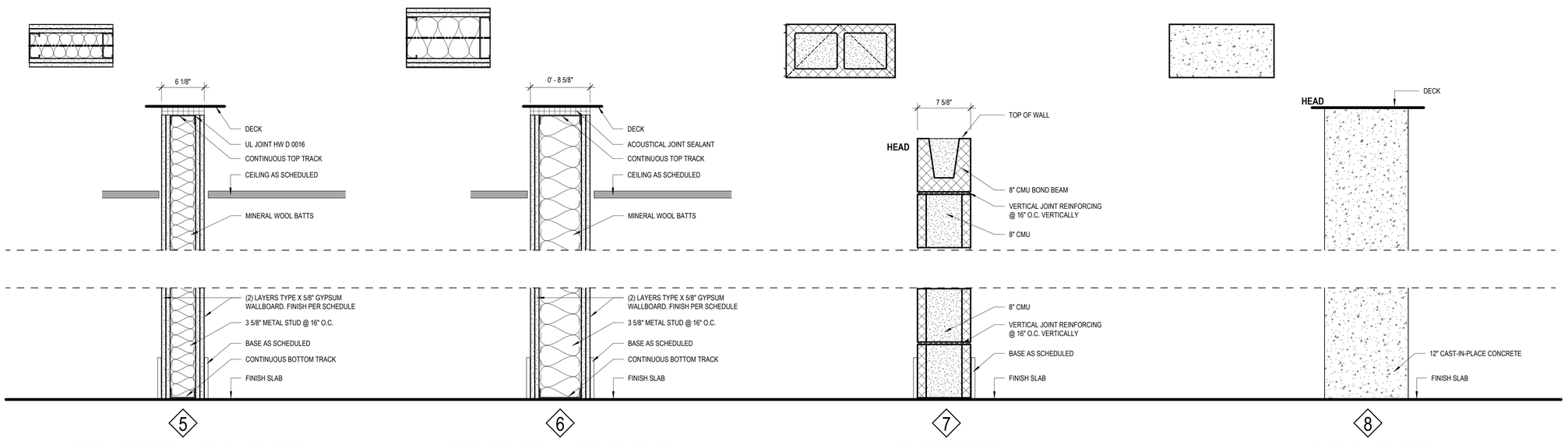

3 5/8" METAL STUD PARTITION, 2 LAYER 5/8" GWB. EACH SIDE UL DESIGN: U419 (2 HR RATING) TO DECK

6" METAL STUD PARTITION, 2 LAYER 5/8" GWB. EACH SIDE UL DESIGN: U419 (2 HR RATING) TO DECK

8" CMU INTERIOR PARTITION PARTIAL HEIGHT

12" CAST IN PLACE CONCRETE TO DECK

SYMBOL LEGEND

#	PARTITION TAG

GENERAL PARTITION NOTES

1. ALL RATED WALLS ARE TO BE STENCIL PAINTED IN RED AS FOLLOWS:
   "2-HOUR RATED WALL
   SMOKE BARRIER; SEAL ALL PENETRATIONS"
   WITH THE APPLICABLE RATING NOTED, PER PLANS. LETTERS TO BE 6" HIGH. STENCILS TO BE 12" ABOVE CEILING AND SPACED AT 48" O.C. MAX. BOTH SIDES OF WALL.
2. COORDINATE ADJACENT WALLS OF DIFFERENT TYPES SO THAT GYPSUM BOARD WALL FACES ALIGN. RESILIENT CHANNELS TO BE ON THE SAME SIDE OF THE WALL, TYP.
3. ALL INTERIOR PARTITIONS TO BE TYPE **"2"**, U.N.O.
4. SEAL PERIMETER OF ALL WALLS, TYP.
5. PROVIDE FIRE SEALANT AT BASE, PENETRATIONS, AND TOP OF ALL WALLS REQUIRING FIRE RATING.
6. USE 5/8" CEMENTITIOUS TILE BACKING SHEETS IN LIEU OF 5/8" GWB BEHIND ALL WALL TILE; TYP.
7. SEE FINISH SCHEDULE AND FINISH PLANS FOR WALL TILE AND WALL FINISHES.
8. ALL RATED WALLS TO BE CONTINUOUS SYSTEMS. G.C. TO COORDINATE CORRECT SEQUENCING OF RATED WALL CONSTRUCTION.

Susan Hatchell
Landscape Architecture, PLLC
711 W. North Street, Raleigh, NC 27603
p: 919-838-9600 f: 919-838-9700

Esse Architects
832 PERSHING ROAD | RALEIGH, NORTH CAROLINA 27608

PARTITIONS

LAKE MYRA COUNTY PARK
Wake County, NC

REVISIONS

Esse Architects P.A. Registered Architectural Corporation 52498 North Carolina Raleigh, NC

MIRANDA DOWNER POTTHOFF Registered Architect 11863 North Carolina Raleigh, NC
Miranda Potthoff
7/27/2026

Date: 07/27/26

PC-A001

Docusign Envelope ID: 8BDE9837-570C-8E6A-8205-A6B2A1B21988

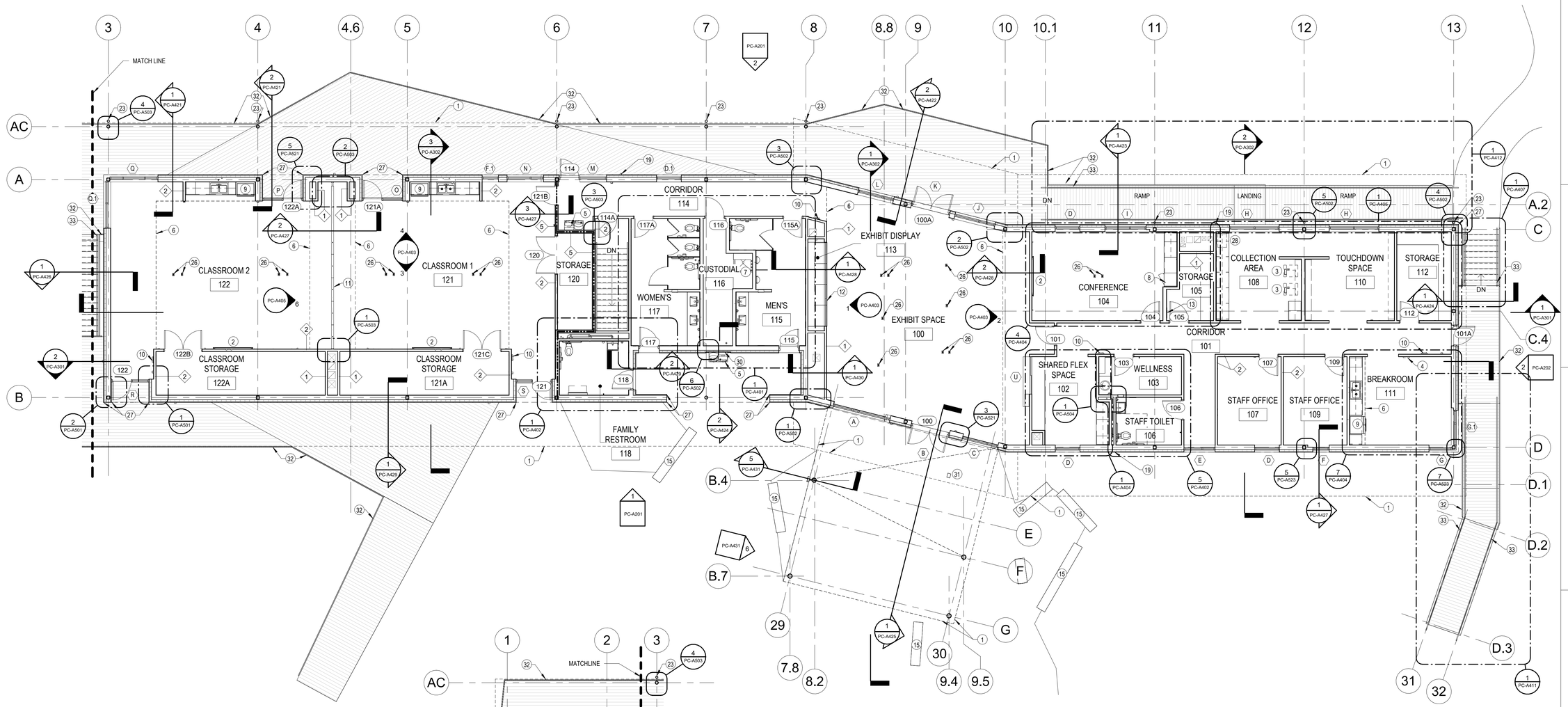

1 PC-A101 PARK CENTER - FIRST FLOOR PLAN
1/8" = 1'-0"

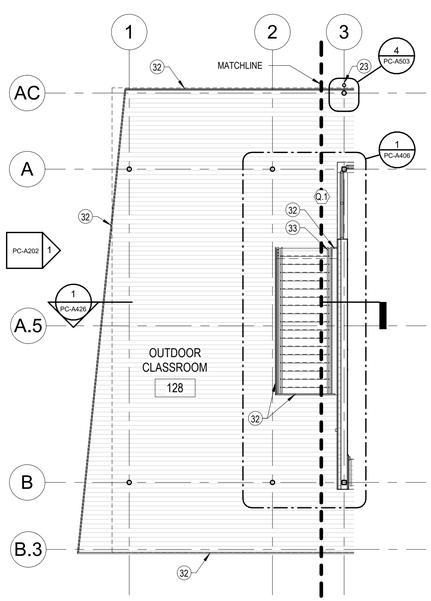

2 PC-A101 PARK CENTER DECK - FIRST FLOOR PLAN
1/8" = 1'-0"

GENERAL KEY NOTES

KEY	DESCRIPTION
1	ROOF OVERHANG ABOVE
2	AV/DATA WALL
3	COPIER LOCATION - COPIER TO BE OWNER PROVIDED
4	TIMECLOCK - OWNER PROVIDED
5	DRINKING FOUNTAIN - SEE PLUMBING DRAWINGS
6	CEILING BULKHEAD AND SOFFIT ABOVE
7	MOP SINK WITH STAINLESS STEEL PROTECTION PANEL - SEE PLUMBING DRAWINGS
8	UNDERCOUNTER REFRIGERATOR
9	FULL HEIGHT REFRIGERATOR
10	PROVIDE NEW FIRE EXTINGUISHER AND FIRE EXTINGUISHER CABINET
11	FOLDING PARTITION W/ FELT FINISH - SEE FINISH SCHEDULE
12	COORDINATE EXTENTS OF OPENING WITH EXHIBIT DESIGNER - GLASS ENCLOSURE IS IN EXHIBIT DESIGN SCOPE
13	PANEL BOARD - SEE ELECTRICAL DRAWINGS
14	INSTALL 3/4" FIRE RESISTANT PLYWOOD ON INDICATED WALL. RUN FROM BASE TO CLG.
15	BENCH - SEE SITE/CIVIL DRAWINGS
16	HEAT PUMP - SEE MECHANICAL DRAWINGS
17	BASE PANEL - SEE ELECTRICAL DRAWINGS
18	DATA RACK - SEE ELECTRICAL DRAWINGS
19	WALL HYDRANT - SEE PLUMBING DRAWINGS
21	OUTLINE OF DECK ABOVE
22	DEHUMIDIFIER - SEE MECHANICAL DRAWINGS
23	ALUMINUM DOWNSPOUT TO IN-GROUND BOOT
25	FLOOR DRAIN - SEE PLUMBING DRAWINGS
26	FLOOR MOUNTED RECEPTICLE AND DATA OUTLET. SEE ELECTRICAL DRAWINGS.
27	CONTINUOUS POWDER COATED VERTICAL ALUMNUM TRIM
28	LAMINATOR LOCATION - TO BE OWNER PROVIDED
29	DIAGONAL WALL BRACE AT ROOM CORNER - SEE WALL SECTIONS
30	KIOSK SIGNAGE ABOVE DRINKING FOUNTAIN - OWNER PROVIDED AND OWNER INSTALLED
31	ADA PEDESTAL DOOR OPENER - SEE ELECTRICAL DRAWINGS
32	STEEL GUARDRAIL SEE ENLARGED STAIR AND RAMP PLANS AND ELEVATIONS - PAINT PER SPEC 09 9600
33	1 1/2" DIA. ILLUMINATED STAINLESS STEEL HANDRAIL - MOUNTED ON COMPOSITE WOOD DECKING
34	HVAC CONDENSING UNIT - SEE MECHANICAL DRAWINGS
35	SIDEWALK - SEE SITE DRAWINGS FOR EXTENTS
36	WATER HEATER - SEE PLUMBING DRAWINGS

WALL LEGEND

- UNRATED CONSTRUCTION
- 2 HR FIRE BARRIER
- PARTITION TAG

NOTES

1. DIMENSIONS ARE TO CENTERLINE OF COLUMN LINES, FACE OF INTERIOR STUDS, FACE OF EXTERIOR WALL SHEATHING AND FACE OF MASONRY, UNLESS NOTED OTHERWISE.
2. LOCATE DOOR OPENINGS 4" OFF PERPENDICULAR WALL UNLESS OTHERWISE NOTED.
3. WINDOW DIMENSIONS @ ANGLED WINDOWS ARE TO VERTICAL SIDE - SEE WINDOW SCHEDULE ON A602.
4. COORDINATE AND PROVIDE BACKING/BLOCKING FOR MILLWORK AND ITEMS ATTACHED OR MOUNTED TO WALLS OR CEILINGS.
5. SEE CONTROL JOINT PLANS AND ELEVATIONS FOR MASONRY CONTROL JOINT LOCATIONS.
6. FINISH WALL TO FLOOR FOR BASE ADHESION.
7. SEE ENLARGED PLANS FOR ADDITIONAL DETAIL LOCATIONS.

Susan Hatchell
Landscape Architecture, PLLC
711 W. North Street, Raleigh, NC 27603
p: 919-838-9600 f: 919-838-9700

Esse Architects
830 PERSHING ROAD | RALEIGH, NORTH CAROLINA 27608

FIRST FLOOR PLAN

LAKE MYRA COUNTY PARK
Wake County, NC

Esse Architects P.A. Registered Architectural Corporation 52498 Raleigh, North Carolina

MIRANDA DOWNER POTTHOFF Registered Architect 11663 Raleigh, North Carolina
Docusigned by: Miranda Potthoff 1EC0454B0E284BE... 7/27/2026

REVISIONS

Date: 07/27/26

PC-A101

Docusign Envelope ID: 8BDE9837-570C-8E6A-8205-A6B2A1B21988

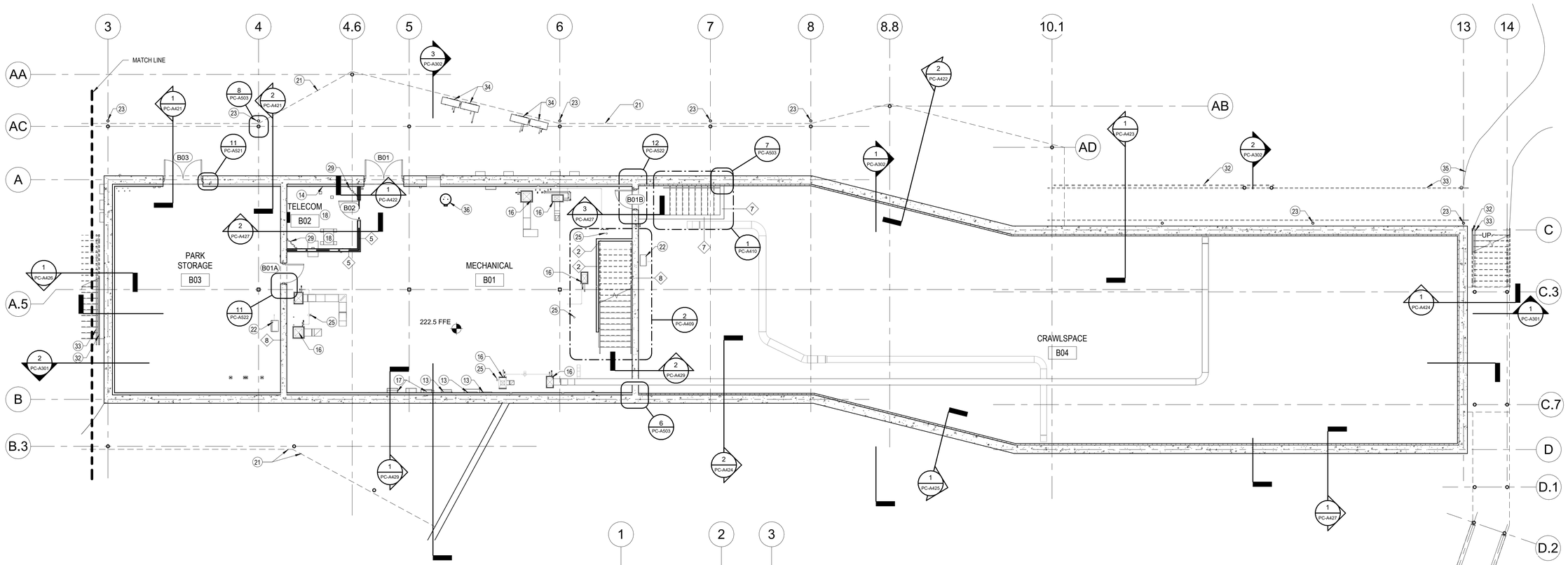

1 PC-A102 PARK CENTER - BASEMENT/CRAWLSPACE PLAN
1/8" = 1'-0"

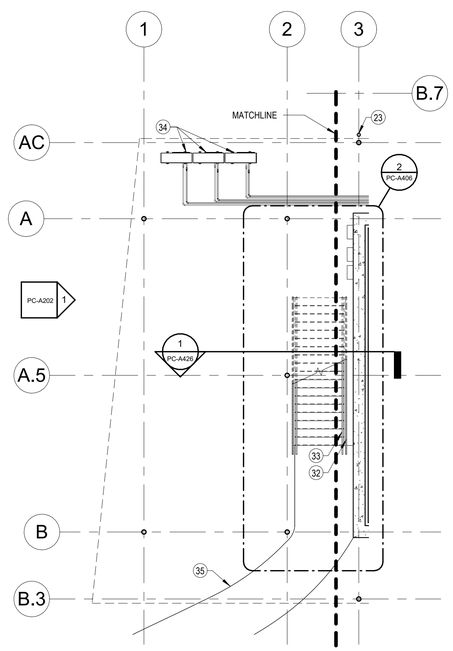

2 PC-A102 PARK CENTER DECK - BASEMENT/CRAWLSPACE PLAN
1/8" = 1'-0"

GENERAL KEY NOTES

KEY	DESCRIPTION
1	ROOF OVERHANG ABOVE
2	AV/DATA WALL
3	COPIER LOCATION - COPIER TO BE OWNER PROVIDED
4	TIMECLOCK - OWNER PROVIDED
5	DRINKING FOUNTAIN - SEE PLUMBING DRAWINGS
6	CEILING BULKHEAD AND SOFFIT ABOVE
7	MOP SINK WITH STAINLESS STEEL PROTECTION PANEL - SEE PLUMBING DRAWINGS
8	UNDERCOUNTER REFRIGERATOR
9	FULL HEIGHT REFRIGERATOR
10	PROVIDE NEW FIRE EXTINGUISHER AND FIRE EXTINGUISHER CABINET
11	FOLDING PARTITION W/ FELT FINISH - SEE FINISH SCHEDULE
12	COORDINATE EXTENTS OF OPENING WITH EXHIBIT DESIGNER - GLASS ENCLOSURE IS IN EXHIBIT DESIGN SCOPE
13	PANEL BOARD - SEE ELECTRICAL DRAWINGS
14	INSTALL 3/4" FIRE RESISTANT PLYWOOD ON INDICATED WALL. RUN FROM BASE TO CLG.
15	BENCH - SEE SITE/CIVIL DRAWINGS
16	HEAT PUMP - SEE MECHANICAL DRAWINGS
17	BASE PANEL - SEE ELECTRICAL DRAWINGS
18	DATA RACK - SEE ELECTRICAL DRAWINGS
19	WALL HYDRANT - SEE PLUMBING DRAWINGS
21	OUTLINE OF DECK ABOVE
22	DEHUMIDIFIER - SEE MECHANICAL DRAWINGS
23	ALUMINUM DOWNSPOUT TO IN-GROUND BOOT
25	FLOOR DRAIN - SEE PLUMBING DRAWINGS
26	FLOOR MOUNTED RECEPTICLE AND DATA OUTLET. SEE ELECTRICAL DRAWINGS.
27	CONTINUOUS POWDER COATED VERTICAL ALUMINUM TRIM
28	LAMINATOR LOCATION - TO BE OWNER PROVIDED
29	DIAGONAL WALL BRACE AT ROOM CORNER - SEE WALL SECTIONS
30	KIOSK SIGNAGE ABOVE DRINKING FOUNTAIN - OWNER PROVIDED AND OWNER INSTALLED
31	ADA PEDESTAL DOOR OPENER - SEE ELECTRICAL DRAWINGS
32	STEEL GUARDRAIL SEE ENLARGED STAIR AND RAMP PLANS AND ELEVATIONS - PAINT PER SPEC 09 9600
33	1 1/2" DIA. ILLUMINATED STAINLESS STEEL HANDRAIL - MOUNTED ON COMPOSITE WOOD DECKING
34	HVAC CONDENSING UNIT - SEE MECHANICAL DRAWINGS
35	SIDEWALK - SEE SITE DRAWINGS FOR EXTENTS
36	WATER HEATER - SEE PLUMBING DRAWINGS

WALL LEGEND

- UNRATED CONSTRUCTION
- 2 HR FIRE BARRIER
- PARTITION TAG

NOTES

1. DIMENSIONS ARE TO CENTERLINE OF COLUMN LINES, FACE OF INTERIOR STUDS, FACE OF EXTERIOR WALL SHEATHING AND FACE OF MASONRY, UNLESS NOTED OTHERWISE.
2. LOCATE DOOR OPENINGS 4" OFF PERPENDICULAR WALL UNLESS OTHERWISE NOTED.
3. WINDOW DIMENSIONS @ ANGLED WINDOWS ARE TO VERTICAL SIDE - SEE WINDOW SCHEDULE ON A602.
4. COORDINATE AND PROVIDE BACKING/BLOCKING FOR MILLWORK AND ITEMS ATTACHED OR MOUNTED TO WALLS OR CEILINGS.
5. SEE CONTROL JOINT PLANS AND ELEVATIONS FOR MASONRY CONTROL JOINT LOCATIONS.
6. FINISH WALL TO FLOOR FOR BASE ADHESION.
7. SEE ENLARGED PLANS FOR ADDITIONAL DETAIL LOCATIONS.

Susan Hatchell
Landscape Architecture, PLLC
711 W. North Street, Raleigh, NC 27603
p: 919-838-9600 f: 919-838-9700

Esse Architects
632 PERSHING ROAD | RALEIGH, NORTH CAROLINA 27608

BASEMENT PLAN

LAKE MYRA COUNTY PARK
Wake County, NC

Esse Architects P.A.
Registered Architectural Corporation
52498
North Carolina
Raleigh, NC

MIRANDA DONNER POTTHOFF
Registered Architect
11663
North Carolina
Raleigh, NC
DocuSigned by: Miranda Potthoff
1EC34BA8B2B4B8...
7/27/2026

REVISIONS

Date: 07/27/26

PC-A102

Docusign Envelope ID: 8BDE9837-570C-8E6A-8205-A6B2A1B21988

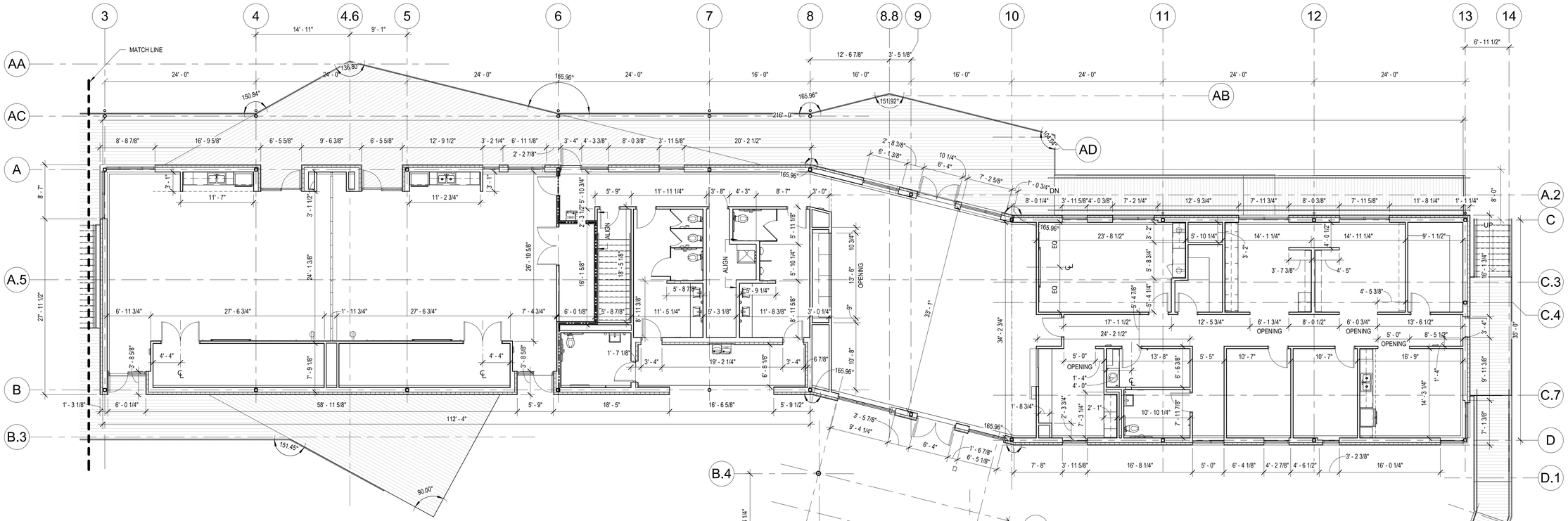

1 PC-A103 PARK CENTER - FIRST FLOOR DIMENSION PLAN
1/8" = 1'-0"

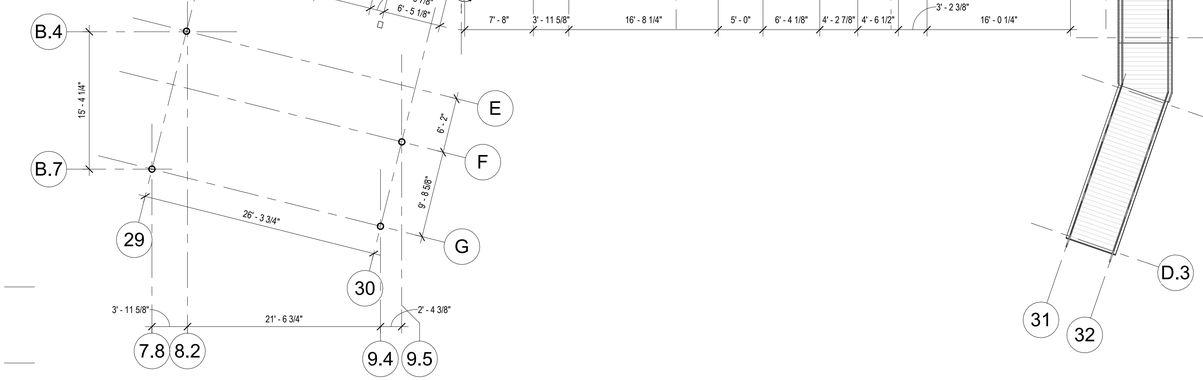

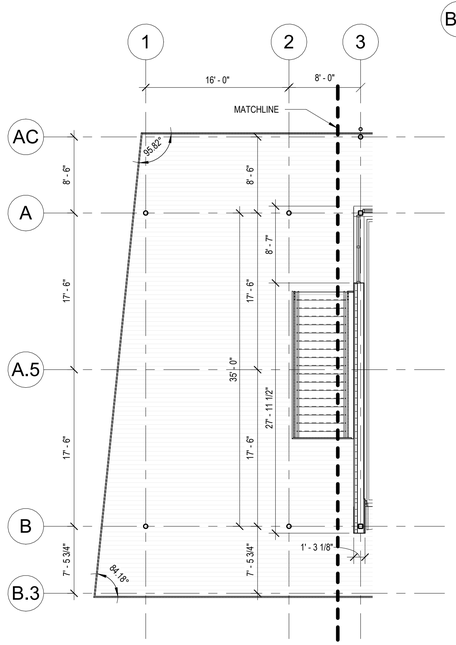

2 PC-A103 PARK CENTER DECK - DIMENSION PLAN
1/8" = 1'-0"

WALL LEGEND

- UNRATED CONSTRUCTION
- 2 HR FIRE BARRIER
- # PARTITION TAG

NOTES

1. DIMENSIONS ARE TO CENTERLINE OF COLUMN LINES, FACE OF INTERIOR STUDS, FACE OF EXTERIOR WALL SHEATHING AND FACE OF MASONRY, UNLESS NOTED OTHERWISE.
2. LOCATE DOOR OPENINGS 4" OFF PERPENDICULAR WALL UNLESS OTHERWISE NOTED.
3. WINDOW DIMENSIONS @ ANGLED WINDOWS ARE TO VERTICAL SIDE - SEE WINDOW SCHEDULE ON A602.
4. COORDINATE AND PROVIDE BACKING/BLOCKING FOR MILLWORK AND ITEMS ATTACHED OR MOUNTED TO WALLS OR CEILINGS.
5. SEE CONTROL JOINT PLANS AND ELEVATIONS FOR MASONRY CONTROL JOINT LOCATIONS.
6. FINISH WALL TO FLOOR FOR BASE ADHESION.
7. SEE ENLARGED PLANS FOR ADDITIONAL DETAIL LOCATIONS.

Susan Hatchell
Landscape Architecture, PLLC
711 W. North Street, Raleigh, NC 27603
p: 919-838-9600 f: 919-838-9700

Esse Architects
830 PERSHING ROAD | RALEIGH, NORTH CAROLINA 27608

DIMENSIONED FIRST FLOOR PLAN

LAKE MYRA COUNTY PARK
Wake County, NC

REVISIONS

Esse Architects, P.A. Registered Architectural Corporation 52498 North Carolina Raleigh, NC

MIRANDA DOWNER POTTHOFF Registered Architect 11663 Signature Miranda Potthoff 1EC0455BDE284B6... North Carolina Raleigh, NC 7/27/2026

Date: 07/27/26

PC-A103

Docusign Envelope ID: 8BDE9837-570C-8E6A-8205-A6B2A1B21988

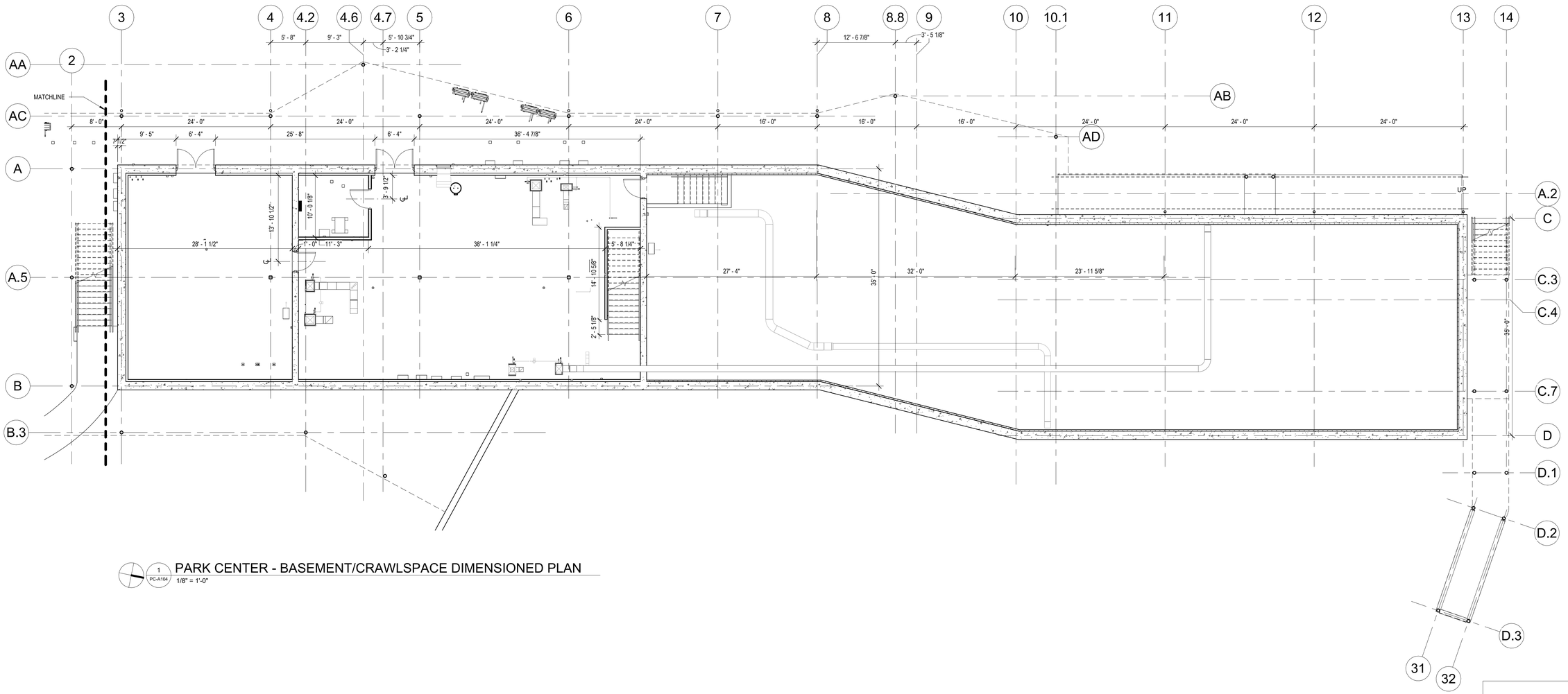

1 PC-A104 PARK CENTER - BASEMENT/CRAWLSPACE DIMENSIONED PLAN
1/8" = 1'-0"

DIMENSION PLAN NOTES

1. DIMENSIONS ARE TO CENTERLINE OF COLUMN LINES, FACE OF INTERIOR STUDS, FACE OF EXTERIOR WALL SHEATHING AND FACE OF MASONRY, UNLESS NOTED OTHERWISE.
2. LOCATE DOOR OPENINGS 4" OFF PERPENDICULAR WALL UNLESS OTHERWISE NOTED.
3. WINDOW DIMENSIONS @ ANGLED WINDOWS ARE TO VERTICAL SIDE - SEE WINDOW SCHEDULE ON A602.
4. COORDINATE AND PROVIDE BACKING/BLOCKING FOR MILLWORK AND ITEMS ATTACHED OR MOUNTED TO WALLS OR CEILINGS.
5. SEE CONTROL JOINT PLANS AND ELEVATIONS FOR MASONRY CONTROL JOINT LOCATIONS.
6. FINISH WALL TO FLOOR FOR BASE ADHESION.

Esse Architects P.A. Registered Architectural Corporation 52498 North Carolina Raleigh, NC

MIRANDA DONNER POTTHOFF Registered Architect 11663 Signed by: Miranda Potthoff UC4A9A8BC0E4A8... North Carolina Raleigh, NC 7/27/2026

Susan Hatchell
Landscape Architecture, PLLC
711 W. North Street, Raleigh, NC 27603
p: 919-838-9600 f: 919-838-9700

Esse Architects
630 PERSHING ROAD | RALEIGH, NORTH CAROLINA 27608

DIMENSIONED BASEMENT PLAN

LAKE MYRA COUNTY PARK
Wake County, NC

REVISIONS

Date: 07/27/26

PC-A104

Docusign Envelope ID: 8BDE9837-570C-8E6A-8205-A6B2A1B21988

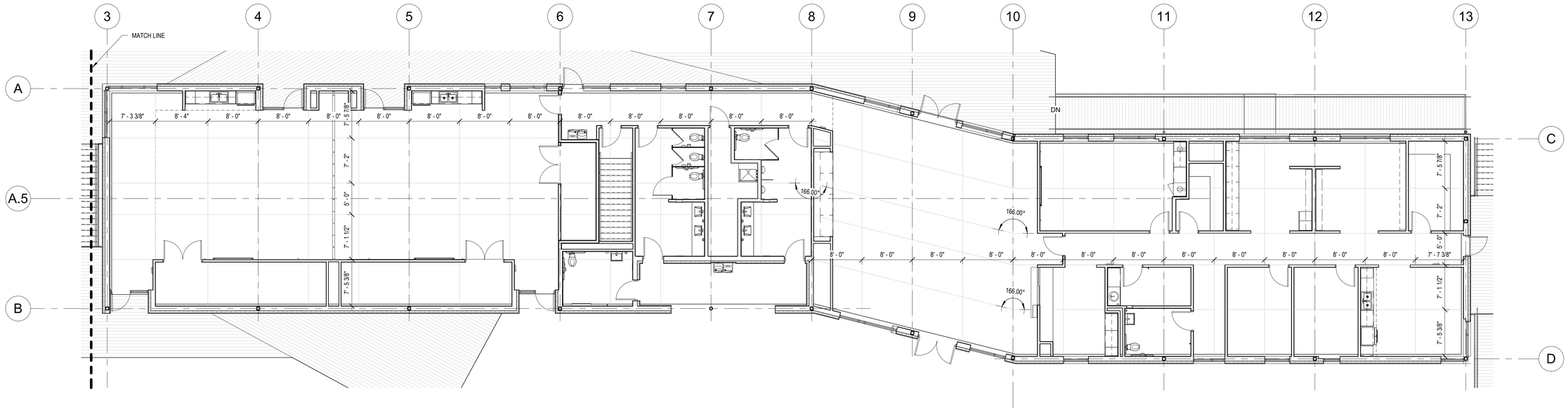

1 PC-A105 FIRST FLOOR - CONTROL JOINT PLAN
1/8" = 1'-0"

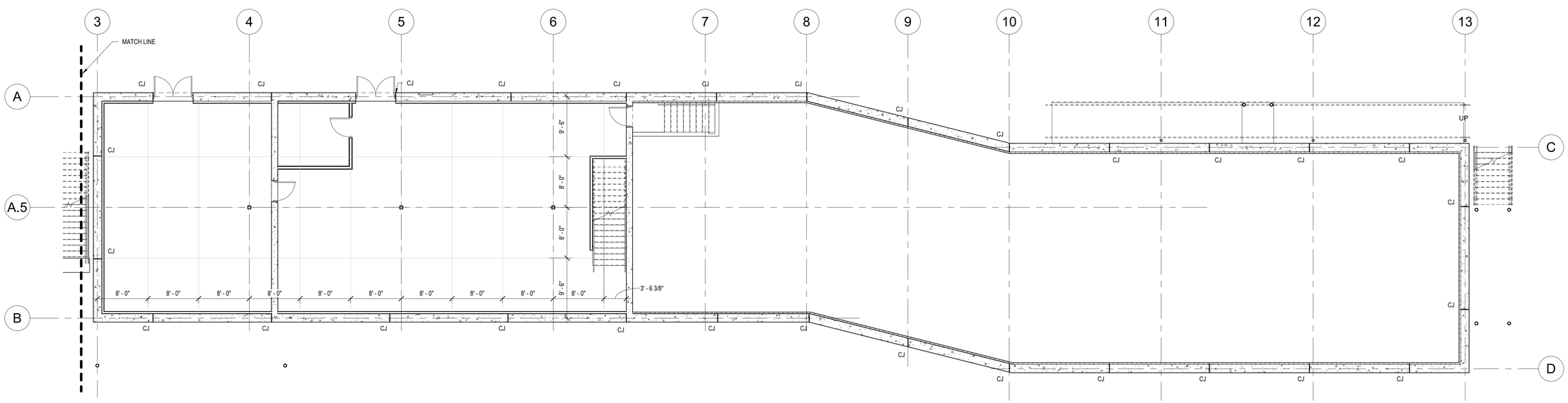

2 PC-A105 BASEMENT/CRAWLSPACE - CONTROL JOINT PLAN
1/8" = 1'-0"

NOTES
1. SEE PLAN FOR SLAB CONTROL JOINT LOCATIONS DEPICTED BY HALFTONE LINES.
2. SEE PLAN FOR WALL CONTROL JOINT LOCATIONS DEPICTED BY DARK LINES AND **CJ**

Susan Hatchell
Landscape Architecture, PLLC
711 W. North Street, Raleigh, NC 27603
p: 919-838-9600 f: 919-838-9700

Esse Architects
632 PERSHING ROAD | RALEIGH, NORTH CAROLINA 27608

CONTROL JOINT PLANS

LAKE MYRA COUNTY PARK
Wake County, NC

Esse Architects P.A. Registered Architectural Corporation 52498 North Carolina Raleigh, NC

MIRANDA DOWNER POTTHOFF Registered Architect 11663 Miranda Potthoff North Carolina 7/27/2026

REVISIONS

Date: 07/27/26

PC-A105

Docusign Envelope ID: 8BDE9837-570C-8E6A-8205-A6B2A1B21988

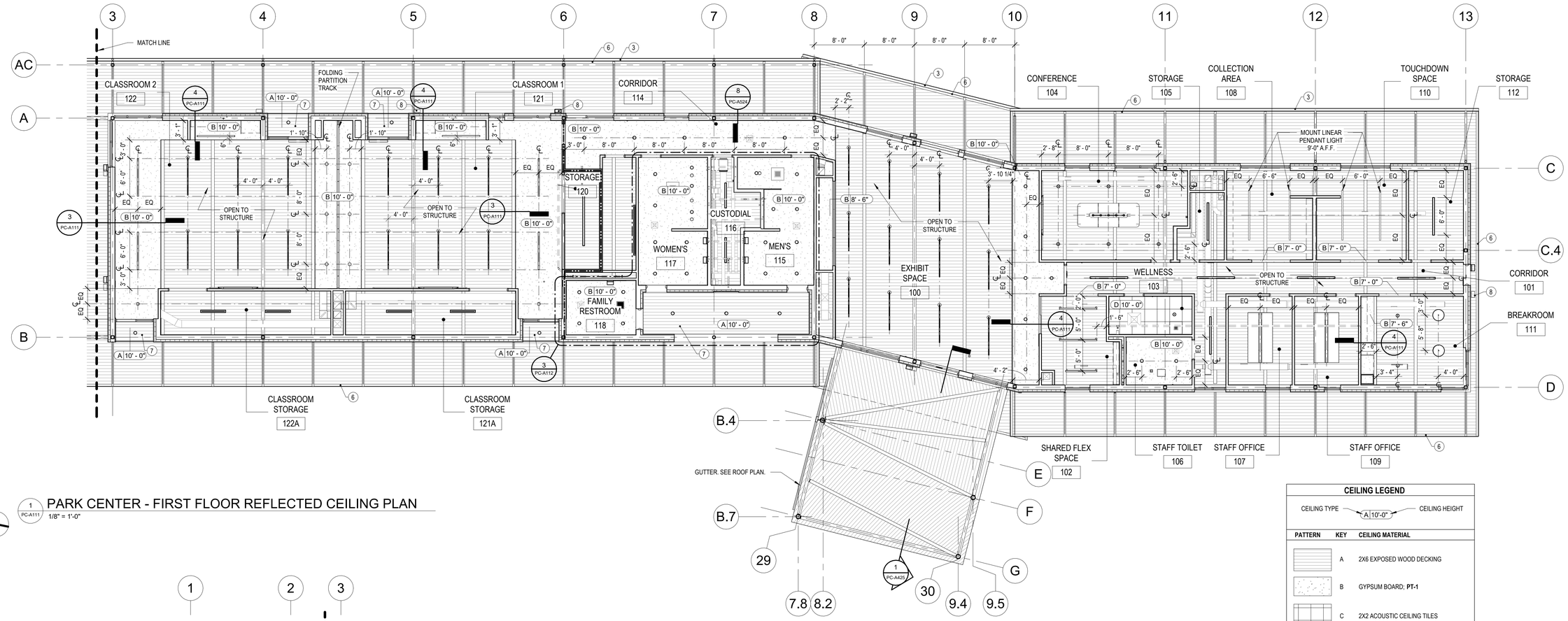

1 PC-A111 PARK CENTER - FIRST FLOOR REFLECTED CEILING PLAN
1/8" = 1'-0"

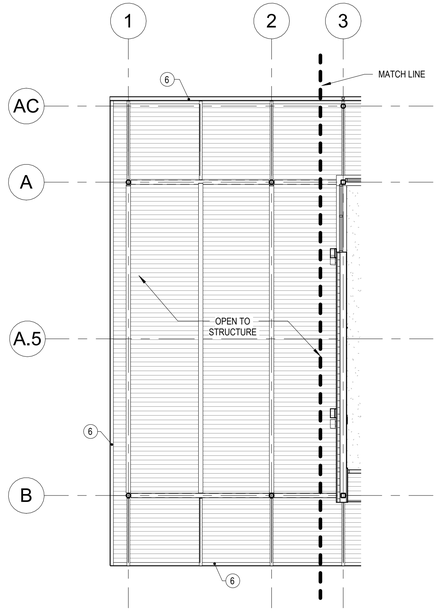

2 PC-A111 PARK CENTER DECK - FIRST FLOOR REFLECTED CEILING PLAN
1/8" = 1'-0"

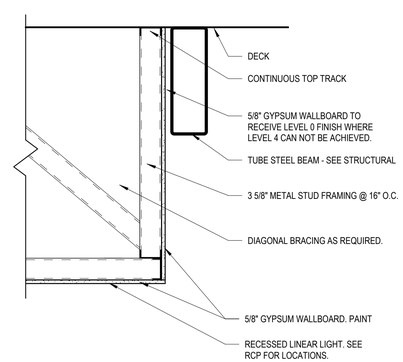

3 PC-A111 SECTION @ GYPSUM SOFFIT ABUTTING STEEL BEAM
1" = 1'-0"

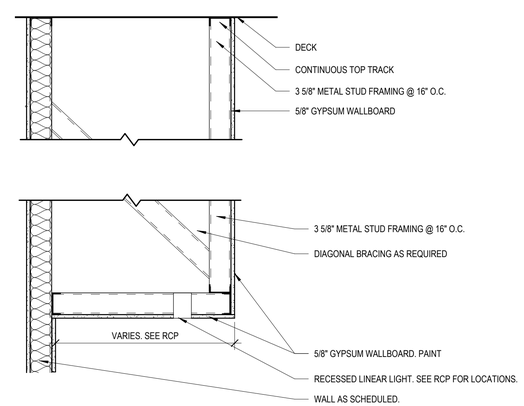

4 PC-A111 SECTION @ TYP. GYPSUM SOFFIT
1" = 1'-0"

GENERAL CEILING AND ROOF NOTES

KEY	DESCRIPTION
1	VENT THRU ROOF - SEE PLUMBING DRAWINGS
2	4" DIAMETER DOWNSPOUT
3	5"X5" ALUMINUM GUTTER
4	WEATHERING STEEL GUTTER
5	WEATHERING STEEL DOWNSPOUT
6	STEEL BENT PLATE AROUND PERIMETER OF ROOF - SEE STRUCTURAL - PAINT PER SPEC 09 9600
7	2x6 WOOD DECK SOFFIT
8	EXTERIOR WALL MOUNTED LIGHT - SEE ELECTRICAL DRAWINGS
9	WALL OUTLINE BELOW
10	CONTINUOUS METAL FASCIA - FULL PERIMETER

CEILING LEGEND

CEILING TYPE — A 10'-0" — CEILING HEIGHT

PATTERN	KEY	CEILING MATERIAL
	A	2X6 EXPOSED WOOD DECKING
	B	GYPSUM BOARD; **PT-1**
	C	2X2 ACOUSTIC CEILING TILES

SYMBOL	DESCRIPTION
	ACOUSTICAL LINEAR DIRECT SUSPENDED FIXTURE
	LINEAR RECESSED OR PENDANT LIGHT FIXTURE
	RECESSED CAN LIGHT
	PENDANT CAN LIGHT
	ACOUSTICAL PENDANT LIGHT; 8' - 0" A.F.F.
	ACOUSTICAL BAFFLE PENDANT LIGHT
	EMERGENCY LIGHT
	FIRE ALARM AUDIO VISUAL
	FIRE ALARM VISUAL
	EXIT SIGN
	AIR SUPPLY
	AIR RETURN

CEILING NOTES:

1. SEE ELECTRICAL AND MECHANICAL PLANS FOR MORE INFORMATION.
2. WHERE CEILING KEYNOTE IS NOT NOTED, ROOM HAS EXPOSED STRUCTURE.
3. CENTER CEILING GRID IN ROOM UNLESS SHOWN OTHERWISE. CENTER LIGHTS AS INDICATED. NOTIFY ARCHITECT OF ANY CONFLICTS OF LOCATIONS PRIOR TO INSTALLATION.
4. ALL DIMENSIONS ARE TO CENTERLINE OF FIXTURE UNLESS OTHERWISE NOTED.
5. SEE FINISH PLANS FOR PAINT COLORS OF CEILING SOFFITS.
6. CONTRACTOR IS NOT TO INSTALL ANY ACCESS PANELS IN GWB CEILING WITHOUT PRIOR APPROVAL AND COORDINATION WITH ARCHITECT.
7. ALL EXPOSED DUCTWORK TO BE PAINTED, **PT-3**, IN SEMI-GLOSS FINISH.
8. PENDANT LIGHTING TO BE MOUNTED **10' - 0" A.F.F.** U.N.O.

Susan Hatchell
Landscape Architecture, PLLC
711 W. North Street, Raleigh, NC 27603
p: 919-838-9600 f: 919-838-9700

Esse Architects
ESS PERSONNEL (ESAC) | RALEIGH | NORTH CAROLINA | 2008

REFLECTED CEILING PLAN FIRST FLOOR

LAKE MYRA COUNTY PARK
Wake County, NC

REVISIONS

Esse Architects P.A. Registered Architectural Corporation 52498 North Carolina Raleigh, NC

MIRANDA DONNER POTTHOFF Registered Architect 11663 Miranda Potthoff 1EC3A5A8BC234B5... DocuSigned by: 7/27/2026 Raleigh, NC

Date: 07/27/26

PC-A111

Docusign Envelope ID: 8BDE9837-570C-8E6A-8205-A6B2A1B21988

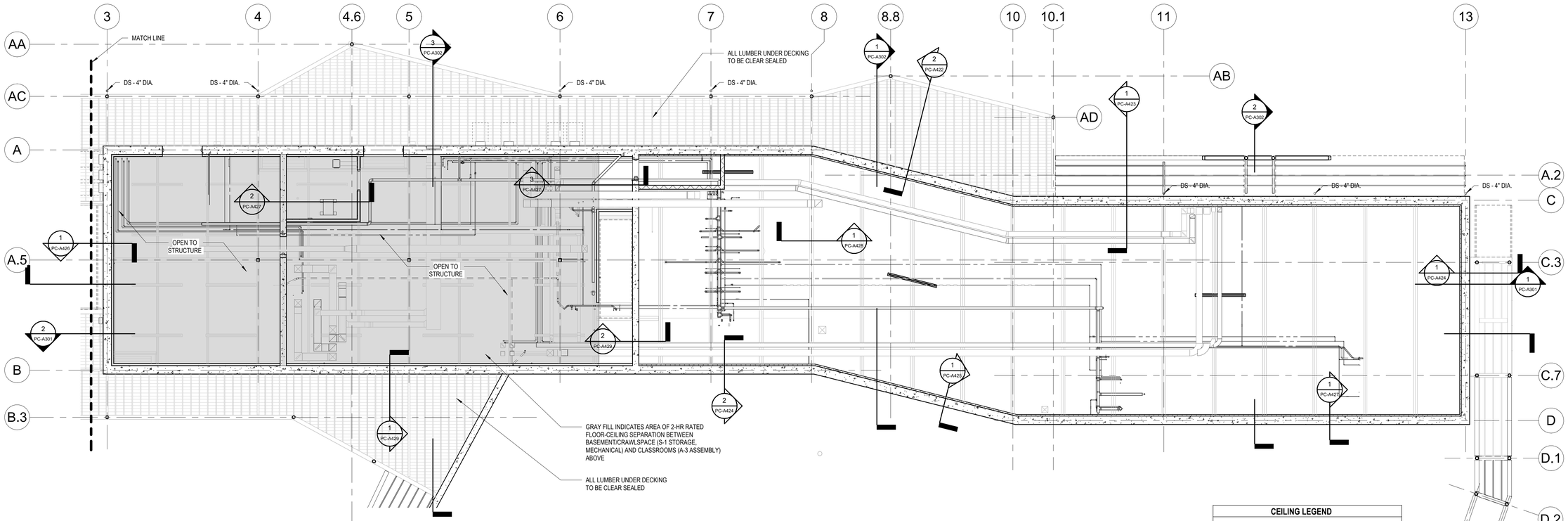

1 PC-A112 PARK CENTER - BASEMENT/CRAWLSPACE REFLECTED CEILING PLAN
1/8" = 1'-0"

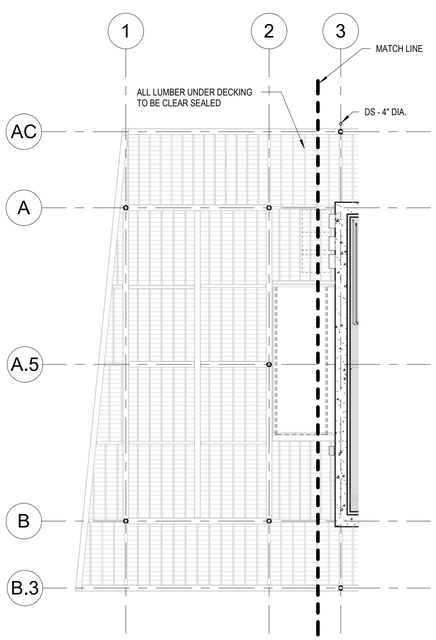

2 PC-A112 PARK CENTER DECK - BASEMENT/CRAWLSPACE REFLECTED CEILING PLAN
1/8" = 1'-0"

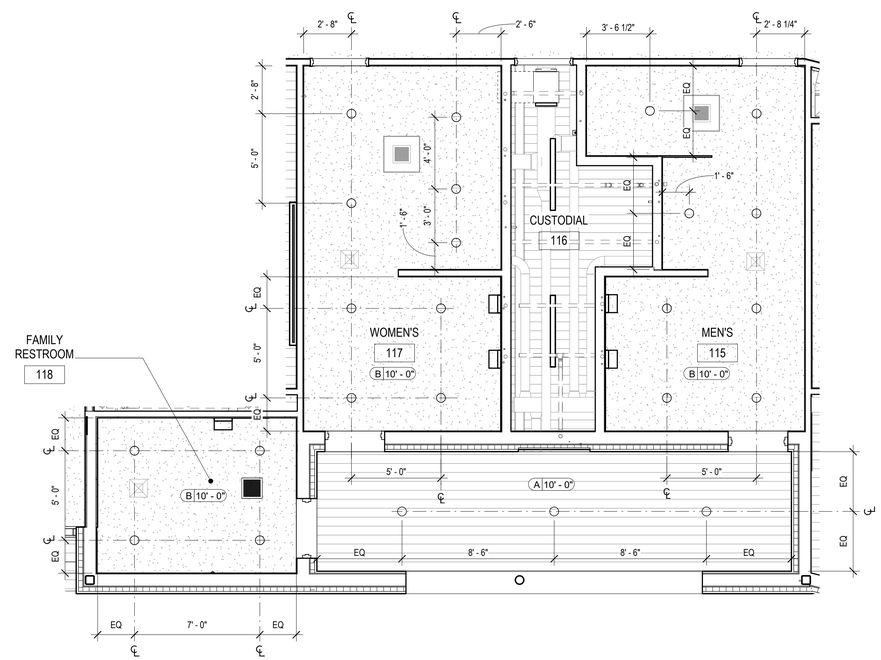

3 PC-A112 PARK CENTER MAIN RESTROOMS - ENLARGED CEILING PLAN
1/4" = 1'-0"

CEILING LEGEND

CEILING TYPE — A 10'-0" — CEILING HEIGHT

PATTERN	KEY	CEILING MATERIAL
	A	2X6 EXPOSED WOOD DECKING
	B	GYPSUM BOARD; **PT-1**
	C	2X2 ACOUSTIC CEILING TILES

SYMBOL	DESCRIPTION
	ACOUSTICAL LINEAR DIRECT SUSPENDED FIXTURE
	LINEAR RECESSED OR PENDANT LIGHT FIXTURE
	RECESSED CAN LIGHT
	PENDANT CAN LIGHT
	ACOUSTICAL PENDANT LIGHT; 8' - 0" A.F.F.
	ACOUSTICAL BAFFLE PENDANT LIGHT
	EMERGENCY LIGHT
	FIRE ALARM AUDIO VISUAL
	FIRE ALARM VISUAL
	EXIT SIGN
	AIR SUPPLY
	AIR RETURN

CEILING NOTES:

1. SEE ELECTRICAL AND MECHANICAL PLANS FOR MORE INFORMATION.
2. WHERE CEILING KEYNOTE IS NOT NOTED, ROOM HAS EXPOSED STRUCTURE.
3. CENTER CEILING GRID IN ROOM UNLESS SHOWN OTHERWISE. CENTER LIGHTS AS INDICATED. NOTIFY ARCHITECT OF ANY CONFLICTS OF LOCATIONS PRIOR TO INSTALLATION.
4. ALL DIMENSIONS ARE TO CENTERLINE OF FIXTURE UNLESS OTHERWISE NOTED.
5. SEE FINISH PLANS FOR PAINT COLORS OF CEILING SOFFITS.
6. CONTRACTOR IS NOT TO INSTALL ANY ACCESS PANELS IN GWB CEILING WITHOUT PRIOR APPROVAL AND COORDINATION WITH ARCHITECT.
7. ALL EXPOSED DUCTWORK TO BE PAINTED, **PT-3**, IN SEMI-GLOSS FINISH.
8. PENDANT LIGHTING TO BE MOUNTED **10' - 0" A.F.F.** U.N.O.

Susan Hatchell
Landscape Architecture, PLLC
711 W. North Street, Raleigh, NC 27603
p: 919-838-9600 f: 919-838-9700

Esse Architects
830 PERSHING ROAD | RALEIGH, NORTH CAROLINA 27608

REFLECTED CEILING PLAN BASEMENT

LAKE MYRA COUNTY PARK
Wake County, NC

REVISIONS

Esse Architects P.A. Registered Architectural Corporation 52498 North Carolina Raleigh, NC

MIRANDA DOWNER POTTHOFF Registered Architect 11663 Miranda Potthoff Permit: 1EC345498623484 North Carolina Raleigh, NC 7/27/2026

Date: 07/27/26

PC-A112

Docusign Envelope ID: 8BDE9837-570C-8E6A-8205-A6B2A1B21988

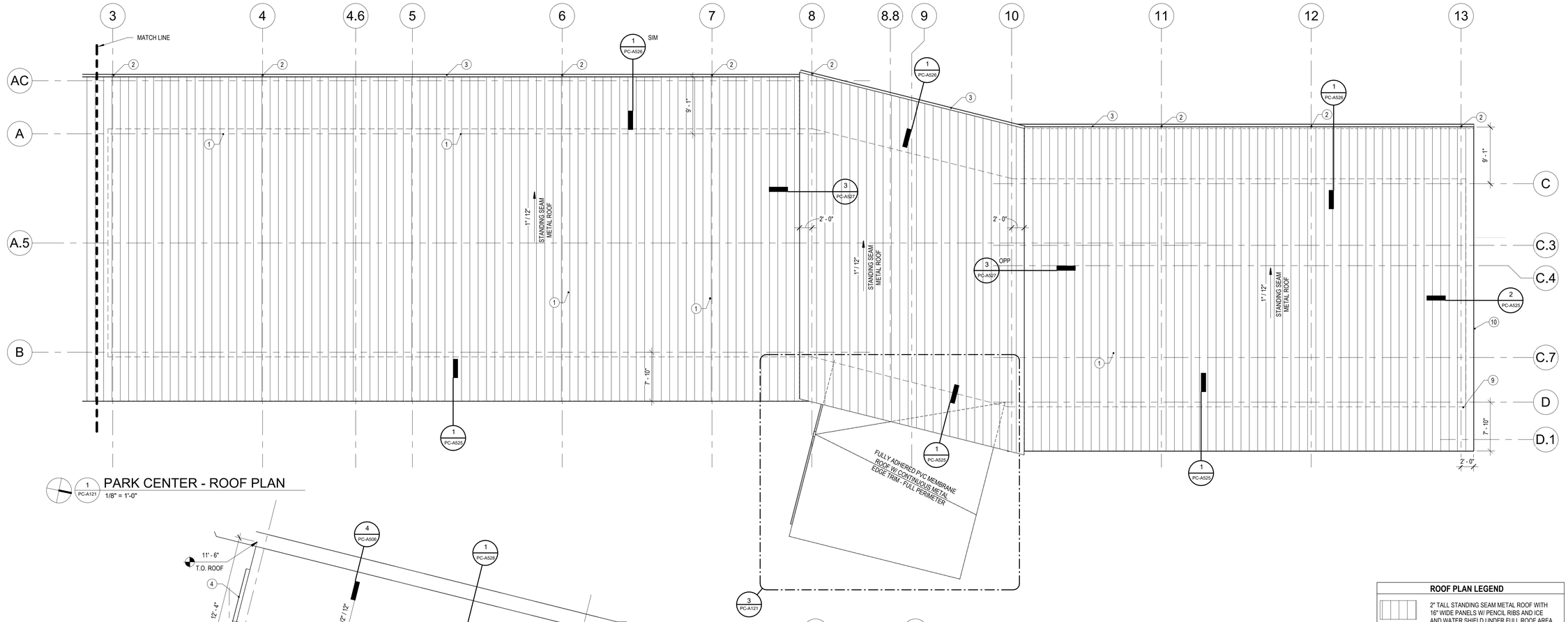

1 PC-A121 PARK CENTER - ROOF PLAN
1/8" = 1'-0"

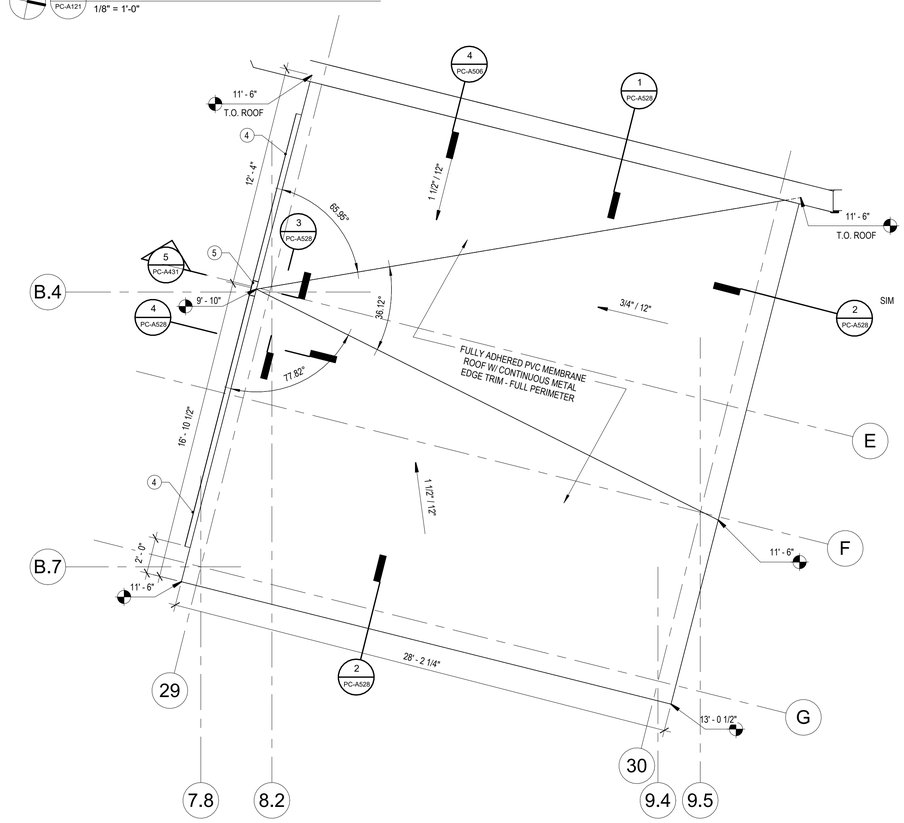

3 PC-A121 ENLARGED ROOF PLAN - PARK CENTER CANOPY
1/4" = 1'-0"

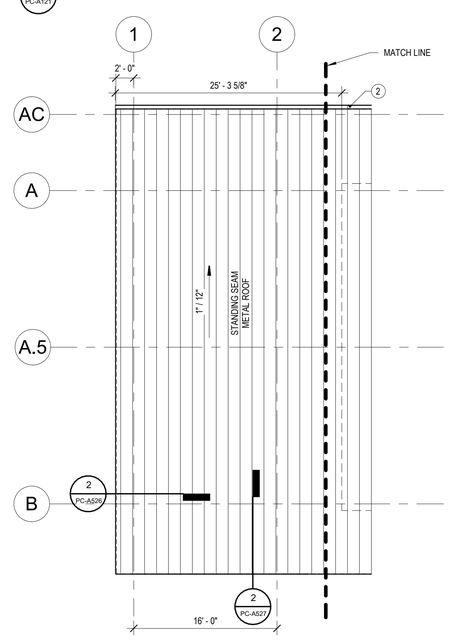

2 PC-A121 ROOF PLAN - PARK CENTER DECK
1/8" = 1'-0"

ROOF PLAN LEGEND	
	2" TALL STANDING SEAM METAL ROOF WITH 16" WIDE PANELS W/ PENCIL RIBS AND ICE AND WATER SHIELD UNDER FULL ROOF AREA
	MEMBRANE ROOF
X" / 12"	ROOF SLOPE DOWN - SEE NOTES ON ROOF PLAN

ROOF PLAN NOTES

1. STRUCTURAL WOOD ROOF DECK IS ALSO FINISHED CEILING - NO FASTENERS SHALL PENETRATE DECKING
2. NO EXPOSED CONDUIT SHALL BE RUN ACROSS UNDERSIDE OF WOOD DECKING WITHOUT REVIEW AND COORDINATION WITH THE ARCHITECT. COORDINATE FOR LIGHTING, SECURITY, ETC.

GENERAL CEILING AND ROOF NOTES

KEY	DESCRIPTION
1	VENT THRU ROOF - SEE PLUMBING DRAWINGS
2	4" DIAMETER DOWNSPOUT
3	5"X5" ALUMINUM GUTTER
4	WEATHERING STEEL GUTTER
5	WEATHERING STEEL DOWNSPOUT
6	STEEL BENT PLATE AROUND PERIMETER OF ROOF - SEE STRUCTURAL - PAINT PER SPEC 09 9600
7	2x6 WOOD DECK SOFFIT
8	EXTERIOR WALL MOUNTED LIGHT - SEE ELECTRICAL DRAWINGS
9	WALL OUTLINE BELOW
10	CONTINUOUS METAL FASCIA - FULL PERIMETER

Susan Hatchell
Landscape Architecture, PLLC
711 W. North Street, Raleigh, NC 27603
p: 919-838-9600 f: 919-838-9700

Esse Architects
632 PERSHING ROAD | RALEIGH, NORTH CAROLINA 27608

ROOF PLAN

LAKE MYRA COUNTY PARK
Wake County, NC

REVISIONS

Esse Architects P.A. Registered Architectural Corporation 52498 North Carolina Raleigh, NC

MIRANDA DONNER POTTHOFF Registered Architect 17663 Signature Miranda Potthoff North Carolina Raleigh, NC 7/27/2026

Date: 07/27/26

PC-A121

Docusign Envelope ID: 8BDE9837-570C-8E6A-8205-A6B2A1B21988

FINISH LEGEND

FLOORING

	BASIS OF DESIGN:		EQUAL 1:	EQUAL 2:
096813.01	MANUFACTURER:	MOHAWK	SHAW CONTRACT	MILLIKEN
CPT-1	COLLECTION:	LICHEN COMMUNITY	LIVING SYSTEMS	REVELATION
CARPET	PATTERN:	BARK COMMUNITY	RESPOND TILE	PATHWAY
	COLOR:	858 BARK	RADIANT	REFLECT
	SIZE:	12" X 36"	9" X 36"	50CM X 1M
	INSTALL METHOD:	ASHLAR	ASHLAR	ASHLAR
096813.02	MANUFACTURER:	MOHAWK	SHAW CONTRACT	MILLIKEN
CPT-2	COLLECTION:	LICHEN COMMUNITY	LIVING SYSTEMS	REVELATION
CARPET	PATTERN:	MICRO BLOOM II	RESPOND COLOR TILE	PATHWAY
	COLOR:	856 JEWEL LEAF BARK	RADIANT NATURE	FIELD
	SIZE:	12" X 36"	9" X 36"	50CM X 1M
	INSTALL METHOD:	ASHLAR	ASHLAR	ASHLAR
096813.03	MANUFACTURER:	MOHAWK	SHAW CONTRACT	MILLIKEN
CPT-3	COLLECTION:	LICHEN COMMUNITY	LIVING SYSTEMS	REVELATION
CARPET	PATTERN:	MACRO BLOOM II	TRANSFORM COLOR TILE	REVEAL
	COLOR:	856 JEWEL LEAF BARK	RADIANT NATURE	FIELD
	SIZE:	12" X 36"	9" X 36"	50CM X 1M
	INSTALL METHOD:	ASHLAR	ASHLAR	ASHLAR
096813.04	MANUFACTURER:	MOHAWK	SHAW CONTRACT	MILLIKEN
WOC-1	COLLECTION:	TUFF STUFF II	STEPPIN OUT	OBEX TILE
WALK OFF CARPET	PATTERN:	STEP UP II	WELCOME II TILE	CUT/STIPPLE
	COLOR:	983 IRON ORE	BLAK CHOCOLATE	TAUPE
	SIZE:	24" X 24"	24" X 24"	50CM X 50CM
	INSTALL METHOD:	MONOLITHIC	QUARTER TURN	MONOLITHIC
093013.01	MANUFACTURER:	SPARTAN SURFACES	STONE SOURCE	SPECIALTY TILE PRODUCTS
PORF-1	COLLECTION:	MICRON	FIORANO SOLID PATTERNS	RECONCRETE
FLOOR TILE	COLOR:	MICRON BRANCO NA	SUGAR MIX	TERRAZZO RICE
	TYPE/SIZE:	80CM X 80CM	24" X 24"	24" X 24"
	GROUT:	LATICRETE SPECTRALOCK: TBD	LATICRETE SPECTRALOCK: TBD	LATICRETE SPECTRALOCK: TBD
	INSTALL METHOD:	MONOLITHIC	MONOLITHIC	MONOLITHIC
033543.01	MANUFACTURER:	SEE SPECIFICATION		
PC-1 POLISHED CONCRETE				
033901.01	MANUFACTURER:	SEE SPECIFICATION		
SC-1 SEALED CONCRETE				

BASE

096513.01	MANUFACTURER	ROPPE	JOHNSONITE	FLEXCO
RB-1	COLOR:	175 SLATE	COLONIAL GREY	MEDIUM GRAY
RUBBER BASE	PROFILE/HEIGHT:	6"; TOELESS @ CPT , STANDARD TOE @ PC	6"; TOELESS @ CPT , STANDARD TOE @ PC	6"; STRAIGHT @ CPT , COVE @ PC
096513.02	MANUFACTURER	ROPPE	JOHNSONITE	FLEXCO
RB-2	COLOR:	147 LIGHT BROWN	DARK BROWN	OUTER BANKS
RUBBER BASE	PROFILE/HEIGHT:	6"; TOELESS	6"; TOELESS	6"; STRAIGHT @ CPT , COVE @ PC
064619.01	SPECIES:	BIRCH		
WB-1	CUT:	PLAIN SAWN		
WOOD BASE	PROFILE:	6"		
	FINISH:	ST-1		

WALLS

093013.02	MANUFACTURER:	SPARTAN SURFACES	STONE SOURCE	SPECIALTY TILE PRODUCTS
TB-1	COLLECTION:	MICRON	FIORANO SOLID PATTERNS	RECONCRETE
TILE BASE	COLOR:	MICRON BRANCO NA	SUGAR MIX	TERRAZZO RICE
	TYPE/SIZE:	6"H; CUT IN FIELD	6" X 24"	6" X 24"
	GROUT:	LATICRETE SPECTRALOCK: TBD	LATICRETE SPECTRALOCK: TBD	LATICRETE SPECTRALOCK: TBD
	INSTALL METHOD:	MONOLITHIC	VARIES; SEE ELEVATIONS	VARIES; SEE ELEVATIONS
093013.03	MANUFACTURER:	SPARTAN SURFACES	STONE SOURCE	SPECIALTY TILE PRODUCTS
WT-1	COLLECTION:	SILEX	FIORANO SOLID PATTERNS	RECONCRETE
WALL TILE	COLOR:	SILEX BRANCO NA	SUGAR	RICE
	TYPE/SIZE:	90CM X 90CM	24" X 24"	24" X 24"
	GROUT:	LATICRETE SPECTRALOCK: TBD	LATICRETE SPECTRALOCK: TBD	LATICRETE SPECTRALOCK: TBD
	INSTALL METHOD:	VARIES; SEE ELEVATIONS	VARIES; SEE ELEVATIONS	VARIES; SEE ELEVATIONS
093013.04	MANUFACTURER:	BEST TILE	MOSAIC	SPECIALTY TILE PRODUCTS
WT-2	COLLECTION:	SPARK	KIT KAT	INAX NAGI BORDER
WALL TILE	COLOR:	WHITE; KIT KAT	SNOW	WHITE
	TYPE/SIZE:	5" X 10"	4" X 9"	9" X 12"
	GROUT:	LATICRETE SPECTRALOCK: TBD	LATICRETE SPECTRALOCK: TBD	LATICRETE SPECTRALOCK: TBD
	INSTALL METHOD:	VARIES; SEE ELEVATIONS	VARIES; SEE ELEVATIONS	VARIES; SEE ELEVATIONS
093013.05	MANUFACTURER:	BEST TILE	MOSAIC	SPECIALTY TILE PRODUCTS
WT-3	COLLECTION:	MAREA	KREA 2.0	EARTH
WALL TILE	COLOR:	ARCTIC; MATTE	ARCTIC; MATTE	BONE
	TYPE/SIZE:	4" X 12"	4" X 12"	2" X 8"
	GROUT:	LATICRETE SPECTRALOCK: TBD	LATICRETE SPECTRALOCK: TBD	LATICRETE SPECTRALOCK: TBD
	INSTALL METHOD:	VARIES; SEE ELEVATIONS	VARIES; SEE ELEVATIONS	VARIES; SEE ELEVATIONS
093013.06	MANUFACTURER:	BEST TILE	MOSAIC	SPECIALTY TILE PRODUCTS
WT-4	COLLECTION:	MAREA	KREA 2.0	EARTH
WALL TILE	COLOR:	LEAF; MATTE	LEAF; MATTE	LEAF; MATTE
	TYPE/SIZE:	4" X 12"	4" X 12"	2" X 8"
	GROUT:	LATICRETE SPECTRALOCK: TBD	LATICRETE SPECTRALOCK: TBD	LATICRETE SPECTRALOCK: TBD
	INSTALL METHOD:	VARIES; SEE ELEVATIONS	VARIES; SEE ELEVATIONS	VARIES; SEE ELEVATIONS
098433.01	MANUFACTURER:	TURF	ACOUFELT	FILZFELT
AWP-1	COLLECTION:	WALLSCAPE	PREMIER	ARO PLANK 1
ACOUSTICAL WALL PANEL	PATTERN:	TUBULAR	FILTER	ARO PLANK 1.2:B
	COLOR:	50 IVORY	ALMOND	150 WOLLWEIB
	TYPE/SIZE:	12" X 12" TILE	12" X 12" TILE	2 1/4" X 9'
	INSTALL METHOD:	MOUNT WITH LIQUID NAILS LN-903	MOUNT WITH LIQUID NAILS LN-903	MANUFACTUER MOUNTING SYSTEM

WALLS (CONT.)

	BASIS OF DESIGN:		EQUAL 1:	EQUAL 2:
098433.02	MANUFACTURER:	ARMSTRONG	ACOUFELT	FILZFELT
AWP-2	COLLECTION:	FELTWORKS	SOLID	AKUSTIKA 10 WALL
ACOUSTICAL WALL PANEL	PATTERN:	N/A	N/A	N/A
	COLOR:	WHITE (FWH)	ALMOND	150 WOLLWEIB
	TYPE/SIZE:	24" X 48"; SEE ELEVATION	24" X 48"; SEE ELEVATION	24" X 48"; SEE ELEVATION
	INSTALL METHOD:	MOUNT WITH Z-CLIPS	MOUNT WITH Z-CLIPS	MOUNT WITH Z-CLIPS
097201.01	MANUFACTURER:	MOMENTUM	ACOUFELT	FILZFELT
AF-1	COLLECTION:	NUFELT	WALLCOVERING	3MM WOOL DESIGN FELT
ACOUSTICAL FELT	PATTERN:	NON-REVERSE HANG, RANDOM MATCH	STRAIGHT HANG, STRAIGHT MATCH	STRAIGHT HANG, STRAIGHT MATCH
	COLOR:	LEGEND	RAVEN	175 GRAPHITE
	TYPE/SIZE:	63" W; ROLLED	54" W; ROLLED	70" W; ROLLED
	INSTALL METHOD:	ADHESIVE PER MANUFACTURER GUIDELINES	ADHESIVE PER MANUFACTURER GUIDELINES	ADHESIVE PER MANUFACTURER GUIDELINES

CEILING

095113.01	MANUFACTUER:	ARMSTRONG	USG	CERTAINTEED
ACT-1	STYLE:	ULTIMA	MARS	SYMPHONY M
ACOUSTICAL CEILING TILE	COLOR:	WHITE (WH)	FLAT WHITE	WHITE
	SIZE:	24" X 24" BEVELED TEGULAR	24" X 24" FINELINE BEVEL	24" X 24" REVEAL BEVEL
	GRID:	15/16	15/16	15/16

MILLWORK

064116.01	MANUFACTURER:	WILSONART	FORMICA	ARBORITE
PL-1	COLOR:	LANDMARK WOOD	AGED ASH	NATURAL CROSSFIRE PEAR
PLASTIC LAMINATE	FINISH:	SOFTGRAIN	WOODBRUSH	EVERGRAIN EV
064116.02	MANUFACTURER:	WILSONART	FORMICA	NEVAMAR
PL-2	COLOR:	SILK MIST	OYSTER GRAY	PORCELAIN
PLASTIC LAMINATE	FINISH:	MATTE FINISH	MATTE	TEXTURED/SUEDE
064116.03	MANUFACTURER:	WILSONART	FORMICA	ARBORITE
PL-3	COLOR:	SLATE GREY	GRAPHITE	CORDOVA BROWN
PLASTIC LAMINATE	FINISH:	MATTE	MATTE	CASHMERE
123663.01	MANUFACTURER:	WILSONART	HI-MACS	MEGANITE
SS-1	COLOR:	YUKON RIVERSTONE	ANDROMEDA	BLANCA GRANITE
SOLID SURFACE	THICKNESS:	1/2"	1/2"	1/2"
	EDGE:	SQUARE WITH EASED CORNERS	SQUARE WITH EASED CORNERS	SQUARE WITH EASED CORNERS
123665.01	MANUFACTURER:	CAMBRIA	CORIAN QUARTZ	HANSTONE
Q-1	COLOR:	SNOWDON WHITE	CLOUD WHITE	RIDGE
QUARTZ COUNTERTOP	SHEEN:	POLISHED	POLISHED	POLISHED
	THICKNESS:	2CM	2CM	2CM
064193	MANUFACTURER:	RICHELIEU	HAFELE	AMEROCK
	PRODUCT:	BP2102128170	MATCH BOD	MATCH BOD
CABINET PULL	FINISH:	STAINLESS STEEL	STAINLESS STEEL	STAINLESS STEEL

PAINTS

099123.01	MANUFACTURER	SHERWIN WILLIAMS	BENJAMIN MOORE	PPG
PT-1	COLOR:	SW 6203 SPARE WHITE	MATCH BOD	MATCH BOD
FIELD	SHEEN:	EGGSHELL	EGGSHELL	EGGSHELL
099123.02	MANUFACTURER	SHERWIN WILLIAMS	BENJAMIN MOORE	BENJAMIN MOORE
PT-2	COLOR:	SW 6439 GREENFIELD	MATCH BOD	MATCH BOD
ACCENT	SHEEN:	EGGSHELL	EGGSHELL	EGGSHELL
099123.03	MANUFACTURER	SHERWIN WILLIAMS	BENJAMIN MOORE	PPG
PT-3	COLOR:	SW 7048 URBANE BRONZE	MATCH BOD	MATCH BOD
FIELD	SHEEN:	EGGSHELL	EGGSHELL	EGGSHELL
099123.04	MANUFACTURER	SHERWIN WILLIAMS	BENJAMIN MOORE	PPG
PT-4	COLOR:	SW 9167 POLISHED CONCRETE	MATCH BOD	MATCH BOD
HM DOORS & TRIM	SHEEN:	SEMI-GLOSS	SEMI-GLOSS	SEMI-GLOSS
099123.05	MANUFACTURER	SHERWIN WILLIAMS	BENJAMIN MOORE	PPG
PT-5	COLOR:	SW 6438 DILL	MATCH BOD	MATCH BOD
GREEN HM DOORS & TRIM	SHEEN:	SEMI-GLOSS	SEMI-GLOSS	SEMI-GLOSS
099323.01	MANUFACTURER	SHERWIN WILLIAMS	BENJAMIN MOORE	PPG
ST-1	COLOR:	MATCH PL-1	MATCH BOD	MATCH BOD
WOOD STAIN	SHEEN:	SATIN	SATIN	SATIN

MISC.

102113.01	MANUFACTUER:	SCRANTON PRODUCTS	ASI GLOBAL PARTITIONS	BOBRICK
TC-1	COLLECTION:	ECLIPSE 62" H DOOR	SOLID PLASTIC (HDPE)	SIERRA SERIES
TOILET COMPARTMENTS	COLOR:	FOSSIL	MOSS	FOREST GREEN
	FINISH:	ORANGE PEEL	PEBBLE GRAINED	N/A
	INSTALLATION	FLOOR MOUNT, OVERHEAD BRACED	FLOOR MOUNT, OVERHEAD BRACED	FLOOR MOUNT, OVERHEAD BRACED
122413.01	MANUFACTUER:	MECHOSHADE	HUNTER DOUGLAS ARCHITECTURAL	ROLL A SHADE
RWS	COLLECTION:	MANUAL URBANSHADE ROLLER SHADES	RB 500+ MANUAL ROLLER SHADES	INFINITY SHADE - MANUAL
ROLLER WINDOW SHADES	FASCIA COLOR:	WHITE	WHITE	WHITE
	FABRIC COLOR:	ECOSHEER 3% - METAL	SHEERWEAVE INFINITY2 3% - SLATE	PHIFER 3% - OYSTER/PEWTER
	SIZE:	VARIES; FIELD VERIFY	VARIES; FIELD VERIFY	VARIES; FIELD VERIFY
102226.01	MANUFACTURER:	MODERNFOLD		
OP-1	COLLECTION:	ENCORE MICROPERF		
OPERABLE PARTITION	FINISH:	NUFELT - FAWN		
	SIZE:	FIELD VERIFY		

Susan Hatchell
Landscape Architecture, PLLC
711 W. North Street, Raleigh, NC 27603
p: 919-838-9600 f: 919-838-9700

Esse Architects
632 PERSHING ROAD | RALEIGH, NORTH CAROLINA 27608

FINISH LEGEND

LAKE MYRA COUNTY PARK
Wake County, NC

REVISIONS

Date: 07/27/26

PC-A131

Docusign Envelope ID: 8BDE9837-570C-8E6A-8205-A6B2A1B21988

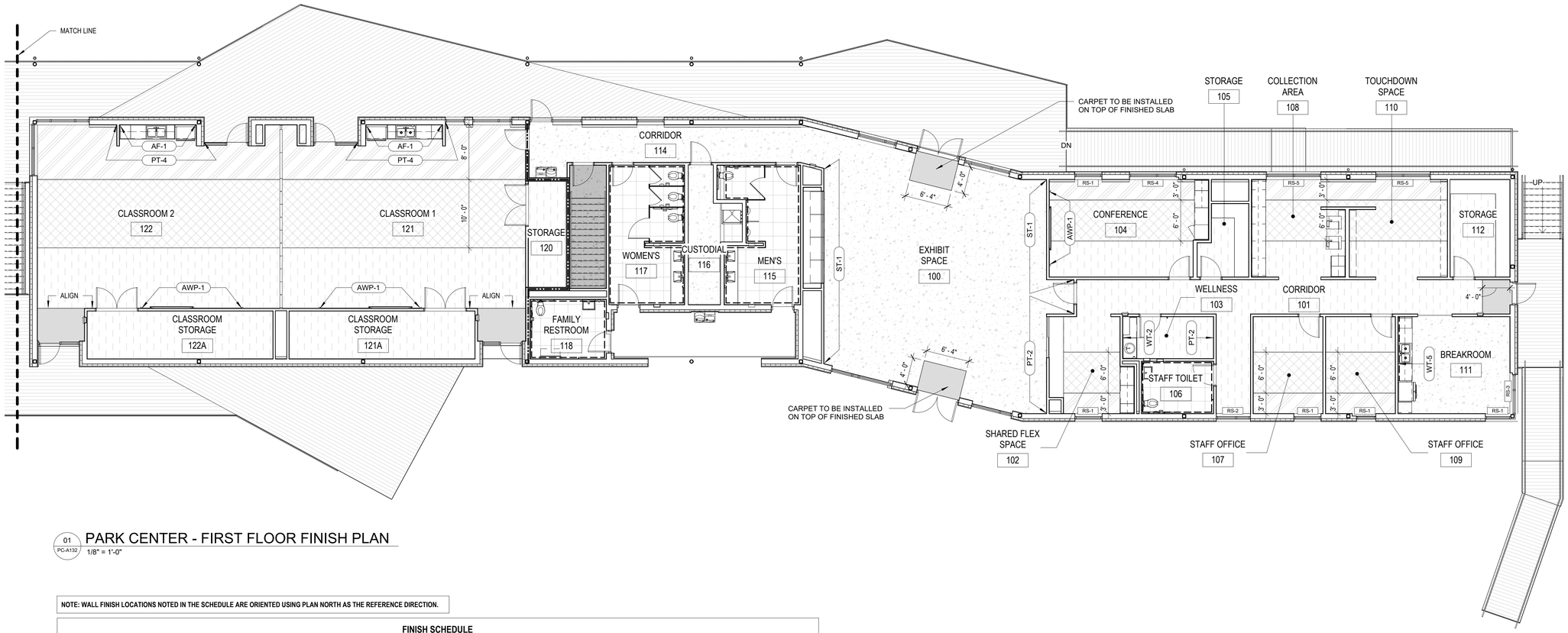

01 PC-A132 PARK CENTER - FIRST FLOOR FINISH PLAN
1/8" = 1'-0"

NOTE: WALL FINISH LOCATIONS NOTED IN THE SCHEDULE ARE ORIENTED USING PLAN NORTH AS THE REFERENCE DIRECTION.

FINISH SCHEDULE

ROOM NUMBER	ROOM NAME	FLOOR		WALLS				CEILING	MILLWORK	
		FLOOR	BASE	NORTH	EAST	SOUTH	WEST		CABINETRY	COUNTERTOP
100	EXHIBIT SPACE	PC-1; WOC-1	WB-1	PT-1	PT-1,2 ; ST-1; AWP-2	PT-1	PT-1; ST-1; AWP-2	EXPOSED; PT-1	PL-3	SS-1
101	CORRIDOR	PC-1; WOC-1	RB-1	PT-1	PT-1	PT-1	PT-1	EXPOSED	--	--
102	SHARED FLEX SPACE	CPT-1,2,3	RB-1	PT-1	PT-1	PT-1	PT-1	EXPOSED	PL-1,2	SS-1
103	WELLNESS	CPT-1	RB-1	PT-1	PT-2	PT-1	WT-2	ACT-1	PL-2	SS-1
104	CONFERENCE	CPT-1,2,3	RB-1	PT-1	PT-1	PT-1	AWP-1; PT-1	EXPOSED	PL-2	SS-1
105	STORAGE	CPT-1	RB-1	PT-1	PT-1	PT-1	PT-1	EXPOSED	--	--
106	STAFF TOILET	PORF-1	TB-1	WT-3; PT-1	PT-1	WT-3; PT-1	WT-3; PT-1	PT-1	--	--
107	STAFF OFFICE	CPT-1,2,3	RB-1	PT-1	PT-1	PT-1	PT-1	EXPOSED	--	--
108	COLLECTION AREA	CPT-1,2,3	RB-1	PT-1	PT-1	PT-1	PT-1; AWP-2	EXPOSED	PL-1,2	SS-1
109	STAFF OFFICE	CPT-1,2,3	RB-1	PT-1	PT-1	PT-1	PT-1	EXPOSED	--	--
110	TOUCHDOWN SPACE	CPT-1,2,3	RB-1	PT-1	PT-1; AWP-2	PT-1	PT-1; AWP-2	EXPOSED	PL-1,2	SS-1
111	BREAKROOM	PC-1	RB-1	PT-1	PT-1	PT-1	PT-1; WT-4	PT-1	PL-1	SS-1
112	STORAGE	CPT-1	RB-1	PT-1	PT-1	PT-1	PT-1	EXPOSED	--	--
114	CORRIDOR	PC-1	WB-1	PT-1	PT-1	PT-1	PT-1	EXPOSED	--	--
115	MEN'S	PORF-1	TB-1	WT-1; PT-1	WT-1; PT-1	WT-1; PT-1	WT-1,3; PT-1	PT-1	PL-1	Q-1
116	CUSTODIAL	SC-1	--	--	--	--	--	EXPOSED	--	--
117	WOMEN'S	PORF-1	TB-1	WT-1; PT-1	WT-1,3; PT-1	WT-1; PT-1	WT-1; PT-1	PT-1	PL-1	Q-1
118	FAMILY RESTROOM	PORF-1	TB-1	WT-1,3; PT-1	WT-1; PT-1	WT-1; PT-1	WT-1; PT-1	PT-1	--	--
120	STORAGE	CPT-1	RB-1	PT-1	PT-1	PT-1	PT-1	EXPOSED	--	--
121	CLASSROOM 1	CPT-1,2,3	RB-1,2	PT-1,4; SS-1; AF-1	PT-1	PT-1; AWP-1	PT-1	EXPOSED; PT-1	PL-1, PL-3	SS-1
121A	CLASSROOM STORAGE	CPT-1	RB-1	PT-1	PT-1	PT-1	PT-1	EXPOSED	--	--
122	CLASSROOM 2	CPT-1,2,3	RB-1,2	PT-1,4; SS-1; AF-1	PT-1	PT-1; AWP-1	PT-1	EXPOSED; PT-1	PL-1, PL-3	SS-1
122A	CLASSROOM STORAGE	CPT-1	RB-1	PT-1	PT-1	PT-1	PT-1	EXPOSED	--	--

ROLLER SHADE SCHEDULE

MARK	LENGTH (VERIFY)
RWS-1	4' - 0"
RWS-2	5' - 0"
RWS-3	6' - 0"
RWS-4	7' - 0"
RWS-5	8' - 0"

SYMBOL LEGEND

- X-X — FINISH TAG
- TXT — ROLLER SHADE TAG
- TILED WALL

GENERAL FINISH NOTES

1. ALL DIMENSIONS TO BE FIELD VERIFIED PRIOR TO ORDERING. DO NOT SCALE FROM DRAWINGS.
2. ALL MATERIALS SHALL BE INSTALLED PER MANUFACTURER'S RECOMMENDATIONS WITH APPROVED ADHESIVES OR OTHER FASTENERS.
3. IF THERE ARE QUESTIONS ABOUT THE DESIGN INTENT OF ANY PATTERN OR MATERIAL TO BE INSTALLED, THE G.C. SHALL SUBMIT A REQUEST FOR INFORMATION TO THE DESIGNER FOR CLARIFICATION PRIOR TO ORDERING THE MATERIALS.
4. THE G.C. SHALL PROVIDE ALL FINISHING PIECES AND TRANSITIONS WHERE DIFFERENT FLOORING THICKNESSES MEET, U.N.O. THE G.C. SHALL SUBMIT A SAMPLE OF THE COLOR/FINISH TO THE DESIGNER FOR APPROVAL.
5. ALL WALLS TO BE FIELD PAINT, **PT-1**, U.N.O. ALL GYPSUM BD. PARTITIONS TO RECEIVE A LEVEL 4 FINISH.
6. ALL INTERIOR HM DOOR FRAMES TO RECEIVE PAINT IN SEMI-GLOSS FINISH, **PT-4**, U.N.O.
7. ALL INTERIOR GYPSUM BD. PARTITIONS TO RECEIVE RUBBER BASE, **RB-1**, U.N.O.
8. EXPOSED ADA THERMAL INSULATED KITS AT SINKS TO BE PAINTED TO WATCH ADJACENT WALL.
9. IN INTERIOR CONDITIONS, FLOORING TO TRANSITION UNDER CLOSED DOOR. FLOORING TO TRANSITION IN CENTER OF CASED OPENING WHEN NO DOOR IS SCHEDULED.
10. ALL COVER PLATES (DATA, LIGHTS, TELEPHONE, ETC.) AND ALL DEVICES TO COORDINATE WITH WAKE COUNTY STANDARDS.

FLOOR FINISH LEGEND

- WALK-OFF CARPET, **WOC-1**
- CARPET TILE, **CPT-1**
- CARPET TILE, **CPT-2**
- CARPET TILE, **CPT-3**
- POLISHED CONCRETE, **PC-1**
- SEALED CONCRETE, **SC-1**
- PORCELAIN TILE, **PORF-1**

Susan Hatchell
Landscape Architecture, PLLC
711 W. North Street, Raleigh, NC 27603
p: 919-838-9600 f: 919-838-9700

Esse Architects
632 PERSHING ROAD | RALEIGH, NORTH CAROLINA 27608

FINISH PLANS AND SCHEDULE

LAKE MYRA COUNTY PARK
Wake County, NC

REVISIONS

Esse Architects P.A. Registered Architectural Corporation 52498 North Carolina Raleigh, NC

MIRANDA DONNER POTTHOFF Registered Architect 11663 North Carolina Raleigh, NC
Miranda Potthoff
IECM4MBE62M8E
7/27/2026

Date: 07/27/26

PC-A132

Docusign Envelope ID: 8BDE9837-570C-8E6A-8205-A6B2A1B21988

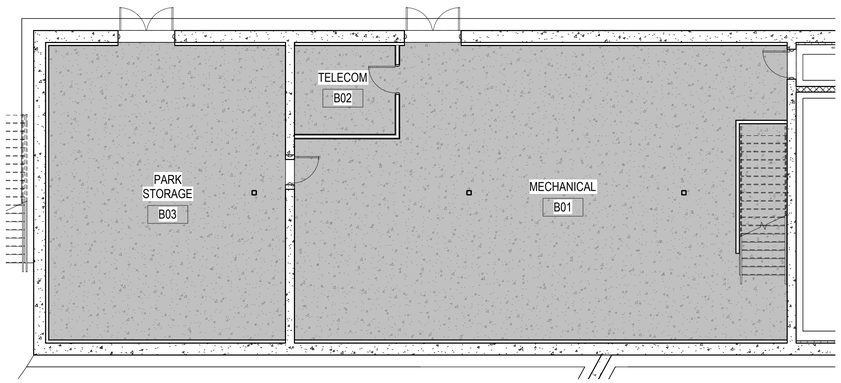

1 PC-A133 PARK CENTER - BASEMENT/CRAWLSPACE FINISH PLAN

1/8" = 1'-0"

NOTE: WALL FINISH LOCATIONS NOTED IN THE SCHEDULE ARE ORIENTED USING PLAN NORTH AS THE REFERENCE DIRECTION.

FINISH SCHEDULE

ROOM NUMBER	ROOM NAME	FLOOR		WALLS				CEILING	MILLWORK	
		FLOOR	BASE	NORTH	EAST	SOUTH	WEST		CABINETRY	COUNTERTOP
B01	MECHANICAL	SC-1	RB-1	PT-1	PT-1	PT-1	PT-1	EXPOSED	--	--
B02	TELECOM	SC-1	RB-1	PT-1	PT-1	PT-1	PT-1	EXPOSED	--	--
B03	PARK STORAGE	SC-1	RB-1	PT-1	PT-1	PT-1	PT-1	EXPOSED	--	--

SYMBOL LEGEND

X-X	FINISH TAG
TXT	ROLLER SHADE TAG
– – – – –	TILED WALL

GENERAL FINISH NOTES

1. ALL DIMENSIONS TO BE FIELD VERIFIED PRIOR TO ORDERING. DO NOT SCALE FROM DRAWINGS.
2. ALL MATERIALS SHALL BE INSTALLED PER MANUFACTURER'S RECOMMENDATIONS WITH APPROVED ADHESIVES OR OTHER FASTENERS.
3. IF THERE ARE QUESTIONS ABOUT THE DESIGN INTENT OF ANY PATTERN OR MATERIAL TO BE INSTALLED, THE G.C. SHALL SUBMIT A REQUEST FOR INFORMATION TO THE DESIGNER FOR CLARIFICATION PRIOR TO ORDERING THE MATERIALS.
4. THE G.C. SHALL PROVIDE ALL FINISHING PIECES AND TRANSITIONS WHERE DIFFERENT FLOORING THICKNESSES MEET, U.N.O. THE G.C. SHALL SUBMIT A SAMPLE OF THE COLOR/FINISH TO THE DESIGNER FOR APPROVAL.
5. ALL WALLS TO BE FIELD PAINT, **PT-1**, U.N.O. ALL GYPSUM BD. PARTITIONS TO RECEIVE A LEVEL 4 FINISH.
6. ALL INTERIOR HM DOOR FRAMES TO RECEIVE PAINT IN SEMI-GLOSS FINISH, **PT-4**, U.N.O.
7. ALL INTERIOR GYPSUM BD. PARTITIONS TO RECEIVE RUBBER BASE, **RB-1**, U.N.O.
8. EXPOSED ADA THERMAL INSULATED KITS AT SINKS TO BE PAINTED TO WATCH ADJACENT WALL.
9. IN INTERIOR CONDITIONS, FLOORING TO TRANSITION UNDER CLOSED DOOR. FLOORING TO TRANSITION IN CENTER OF CASED OPENING WHEN NO DOOR IS SCHEDULED.
10. ALL COVER PLATES (DATA, LIGHTS, TELEPHONE, ETC.) AND ALL DEVICES TO COORDINATE WITH WAKE COUNTY STANDARDS.

FLOOR FINISH LEGEND

	WALK-OFF CARPET, **WOC-1**
	CARPET TILE, **CPT-1**
	CARPET TILE, **CPT-2**
	CARPET TILE, **CPT-3**
	POLISHED CONCRETE, **PC-1**
	SEALED CONCRETE, **SC-1**
	PORCELAIN TILE, **PORF-1**

Susan Hatchell
Landscape Architecture, PLLC
711 W. North Street, Raleigh, NC 27603
p: 919-838-9600 f: 919-838-9700

Esse Architects
632 PERSHING ROAD | RALEIGH, NORTH CAROLINA 27608

FINISH PLANS AND SCHEDULE

LAKE MYRA COUNTY PARK
Wake County, NC

REVISIONS

Esse Architects P.A. Registered Architectural Corporation 52498 North Carolina Raleigh, NC

MIRANDA DOWNER POTTHOFF Registered Architect 11863 North Carolina Raleigh, NC 7/27/2026

Date: 07/27/26

PC-A133

Docusign Envelope ID: 8BDE9837-570C-8E6A-8205-A6B2A1B21988

ALL BUILDING SIGNAGE TO BE PROVIDED BY THE OWNER UNLESS OTHERWISE NOTED.

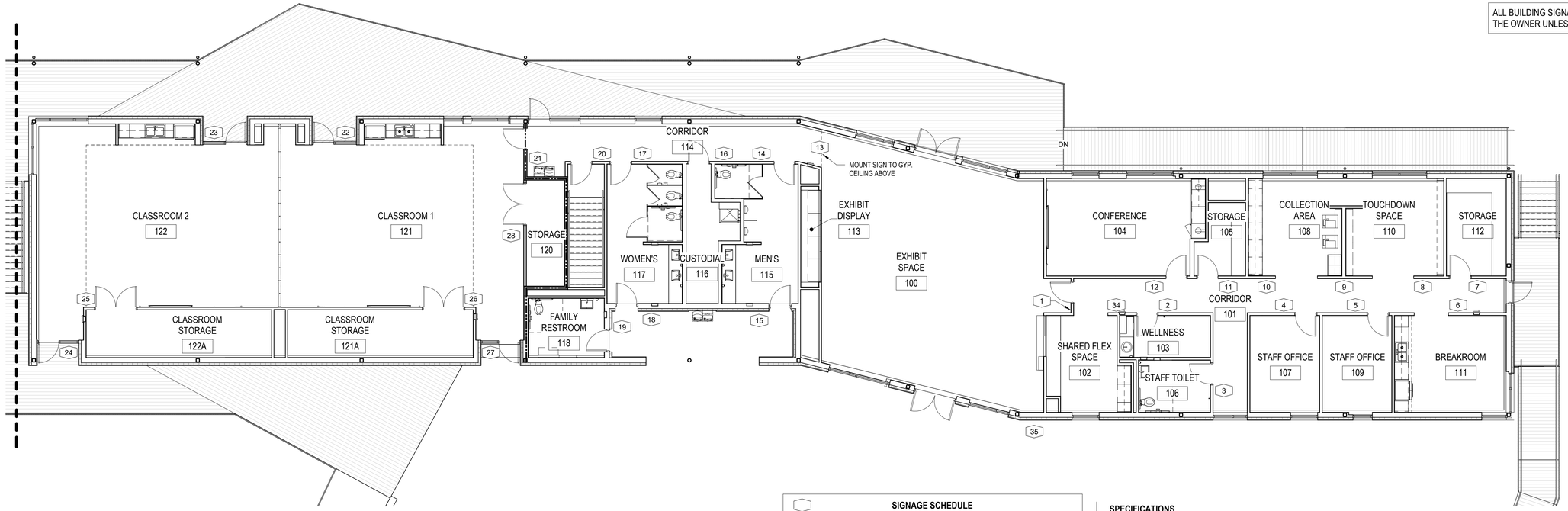

1 PC-A135 PARK CENTER - FIRST FLOOR SIGNAGE PLAN
1/8" = 1'-0"

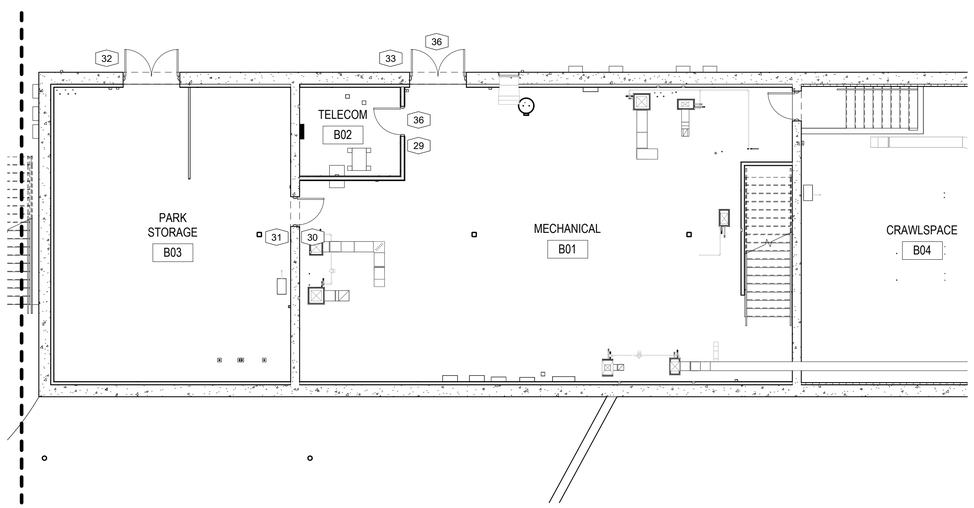

2 PC-A135 PARK CENTER - BASEMENT/CRAWLSPACE SIGNAGE PLAN
1/8" = 1'-0"

SIGNAGE SCHEDULE

SIGN NO.	ROOM NO.	SIGNAGE TEXT	SIGN TYPE	COMMENTS
1	101	OFFICE SUITE	ID.2	
2	103	WELLNESS	ID.5	
3	106	RESTROOM	R.4	
4	107	OFFICE	ID.1	
5	109	OFFICE	ID.1	
6	111	BREAKROOM	ID.1	
7	112	STORAGE	ID.3	
8	110	TOUCHDOWN AREA	ID.2	
9	N/A	SEE SIGNAGE DETAIL	E.1	
10	108	COLLECTION AREA	ID.2	
11	105	STORAGE	ID.3	
12	104	CONFERENCE	ID.4	
13	N/A	SEE SIGNAGE DETAIL	D.2	GC PROVIDED
14	115	MEN	R.2	
15	115	MEN	R.2	
16	116	JANITOR	ID.1	
17	117	WOMEN	R.1	
18	117	WOMEN	R.1	
19	118	RESTROOM	R.3	
20	N/A	STAIRS	D.1	
21	121	CLASSROOM	ID.1	
22	121	CLASSROOM	ID.1	
23	122	CLASSROOM	ID.1	
24	122	CLASSROOM	ID.1	
25	122A	STORAGE	ID.3	
26	121A	STORAGE	ID.3	
27	121	CLASSROOM	ID.1	
28	120	STORAGE	ID.3	
29	B02	TELECOM	ID.3	
30	B03	STORAGE	ID.3	
31	B01	MECHANICAL	ID.3	
32	B03	STORAGE	ID.3	
33	B01	MECHANICAL	ID.3	
34	102	SHARED FLEX SPACE	ID.2	
35	EXTERIOR	SEE SIGNAGE DETAIL	D.3	GC PROVIDED
36	EXTERIOR	FACP	E.2	GC PROVIDED
36	EXTERIOR	FACP	E.2	GC PROVIDED

SPECIFICATIONS

SIGN TYPE D.1

1/8" THERMOFORM SIGN CONSISTING OF INTEGRAL RAISED COPY, GRADE II BRAILLE WITH SUBSURFACE COPY AND PAINT, SIGN TO BE CLEARCOATED AFTER PAINT AND FOIL STAMP HAS BEEN APPLIED.

COPY STYLE: OPTIMA MEDIUM

COPY COLOR: WHITE; ARCHITECT TO SELECT FROM MANUFACTURERS FULL LINE OF COLORS.

BACKGROUND COLOR: ROWMARK BLACK FOREST GREEN OR EQUAL; ARCHITECT TO SELECT FROM MANUFACTURERS FULL RANGE OF COLORS.

NOTE:.SIGN TYPE TO MEET ADA REQUIREMENTS FOR COLOR CONTRAST RATIO

CORNERS: SQUARE

SIGN MOUNTING: CEILING MOUNTED TRACK SYSTEM.

MOUNTING COLOR: ARCHITECT TO SELECT FROM MANUFACTURERS FULL RANGE OF COLORS.

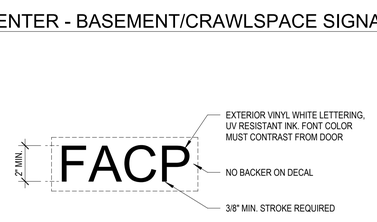

SIGNAGE TYPE E.2 - FACP - GC PROVIDED

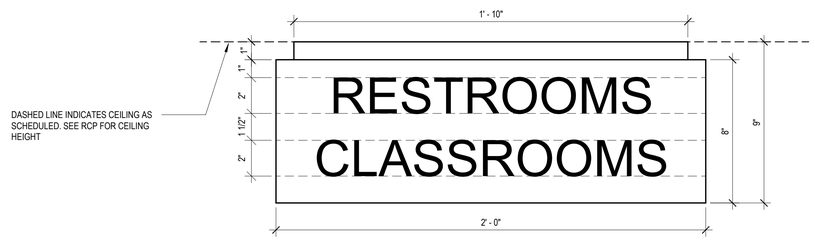

SIGNAGE TYPE D.2 - CEILING DIRECTIONAL SIGNAGE

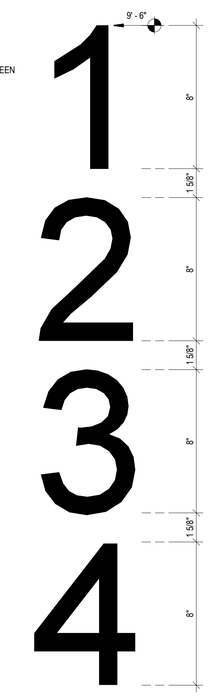

SIGNAGE TYPE D.3 - EXTERIOR BUILDING ADDRESS - GC PROVIDED

DIMENSIONAL SIGNAGE NOTES

FABRICATED METAL SIGNS

TYPEFACE: ARIAL

COLOR: SW 6438 DILL

MOUNTING: DETACHABLE MOUNTING STUDS

SIGN TO BE PROVIDED BY THE GC

BUILDING NUMBER TO BE CONFIRMED WITH OWNER PRIOR TO SUBMITTALS

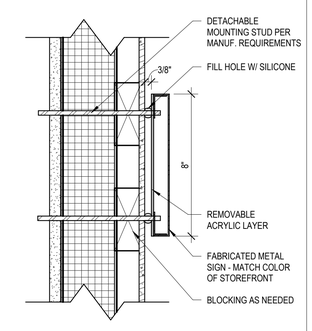

Susan Hatchell
Landscape Architecture, PLLC
711 W. North Street, Raleigh, NC 27603
p: 919-838-9600 f: 919-838-9700

Esse Architects
630 PERSHING ROAD | RALEIGH, NORTH CAROLINA 27608

SIGNAGE PLAN

LAKE MYRA COUNTY PARK
Wake County, NC

Esse Architects P.A. Registered Architectural Corporation 52498 North Carolina Raleigh, NC

MIRANDA DONNER POTHIER Registered Architect 17663 Licensed in NC/SC/GA/FL/VA/TN North Carolina Raleigh, NC 7/27/2026

REVISIONS

Date: 07/27/26

PC-A135

Docusign Envelope ID: 8BDE9837-570C-8E6A-8205-A6B2A1B21988

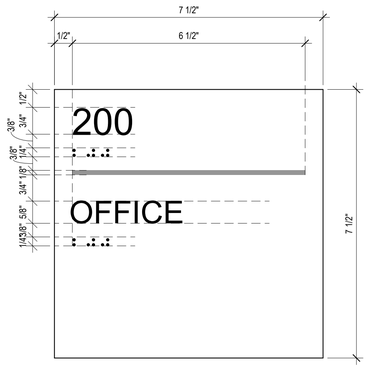

SIGNAGE TYPE ID.1 - ROOM INDICATOR 1 LINE

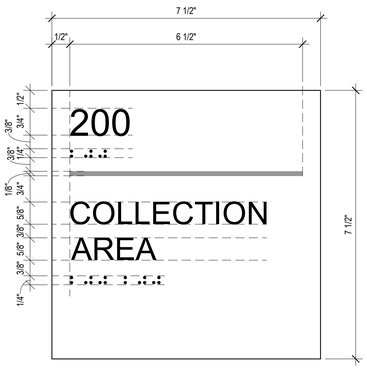

SIGNAGE TYPE ID.2 - ROOM INDICATOR 2 LINES

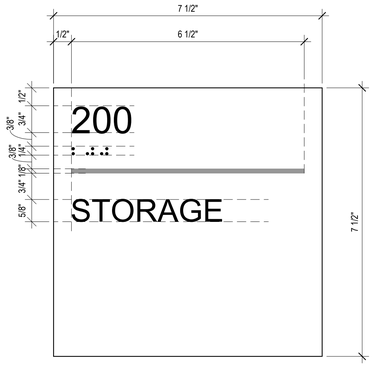

SIGNAGE TYPE ID.3 - ROOM INDICATOR VINYL TEXT

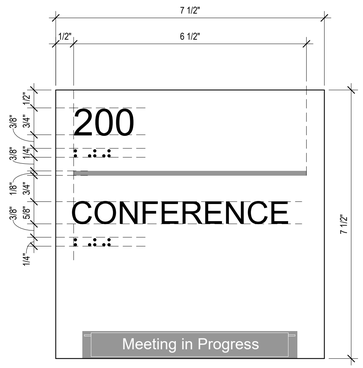

SIGNAGE TYPE ID.4 - ROOM INDICATOR W/ FLIP BAR

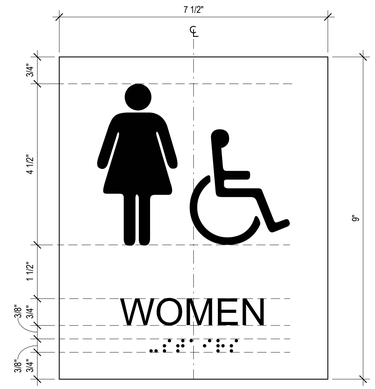

SIGNAGE TYPE R.1 - WOMENS RESTROOM

ALL BUILDING ROOM SIGNAGE TO BE PROVIDED BY THE OWNER UNLESS OTHERWISE NOTED.

SPECIFICATIONS

GENERAL SIGNAGE NOTES

BRAILLE CHARACTERS ARE FOR GRAPHIC REPRESENTATION ONLY - ACTUAL BRAILLE CHARACTERS TO BE DETERMINED BY SIGN FABRICATOR

ADA COMPLIANT 1/8" THERMOFORM SIGN CONSISTING OF INTEGRAL RAISED COPY, GRADE II BRAILLE WITH SUBSURFACE COPY AND PAINT, SIGN TO BE CLEARCOATED AFTER PAINT AND FOIL STAMP HAS BEEN APPLIED.

ROOM NUMBER, BRAILLE, AND ACCENTS ARE RAISED.

WHERE SIGN IS MOUNTED TO GLASS, PLACE A THERMOFORM BLANK SIGN MOUNTED ON OPPOSITE SIDE OF GLASS. BACK PANEL TO MATCH BACKGROUND COLOR.

COPY STYLE: OPTIMA MEDIUM

COPY COLOR: WHITE; ARCHITECT TO SELECT FROM MANUFACTURER'S FULL LINE OF COLORS.

BACKGROUND COLOR: ROWMARK BLACK FOREST GREEN OR EQUAL; ARCHITECT TO SELECT FROM MANUFACTURER'S FULL RANGE OF COLORS.

BRAILLE COLOR: CLEAR

SYMBOL COLOR: WHITE ; ARCHITECT TO SELECT FROM MANUFACTURER'S FULL RANGE OF COLORS.

NOTE: ALL SIGN TYPES TO MEET ADA REQUIREMENTS FOR COLOR CONTRAST RATIO

CORNERS: SQUARE

SIGN MOUNTING: 3M #4910 CLEAR VHB DOUBLE-SIDED TAPE AND CLEAR SILICONE ADHESIVE

SIGN TYPE ID.3 SPECIFICATIONS

REFER TO GENERAL SIGNAGE NOTES FOR ADDITIONAL INFORMATION.

ROOM NUMBER AND BRAILLE ARE RAISED. COPY TO BE VINYL.

SIGN TYPE E.1 SPECIFICATIONS

THERMOFORM SIGN WITH WINDOW FOR INTERCHANGEABLE PLAN INSERT. TWO LAYERS OF 1/8" THERMOFORM WITH 1/32" LAYER OF PLEXIGLASS BETWEEN AS SPACER

TEXT: SCREENPRINTED ON PLEXIGLASS

TYPEFACE: OPTIMA MEDIUM

BACKGROUND COLOR: RED; ARCHITECT TO SELECT FROM MANUFACTURERS FULL RANGE OF COLORS.

TEXT COLOR: WHITE; ARCHITECT TO SELECT FROM MANUFACTURER'S FULL RANGE OF COLORS.

SIGN MOUNTING: 3M #4910 CLEAR VHB DOUBLE-SIDED TAPE AND CLEAR SILICONE ADHESIVE

NOTE: OWNER TO PROVIDE EVACUATION INSERT

NOTE: FINAL QUANTITY AND LOCATIONS TO BE CONFIRMED WITH LOCAL FIRE MARSHAL. CONFIRM LOCATIONS AND QUANTITY WITH FIRE MARSHAL PRIOR TO INSTALLATION

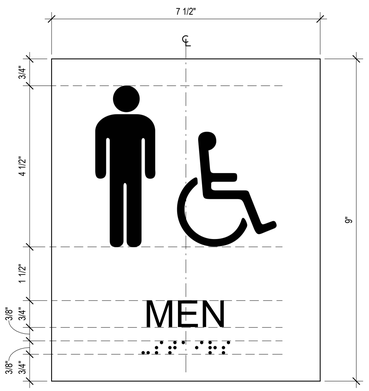

SIGNAGE TYPE R.2 - MEN'S RESTROOM

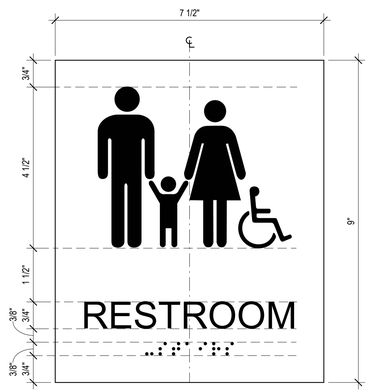

SIGNAGE TYPE R.3 - FAMILY RESTROOM

SIGNAGE TYPE R.4 - STAFF RESTROOM

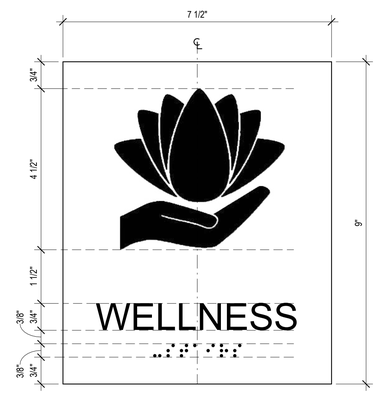

SIGNAGE TYPE ID.5 - WELLNESS ROOM

SIGNAGE TYPE D.1 - DESIGNATION SIGN

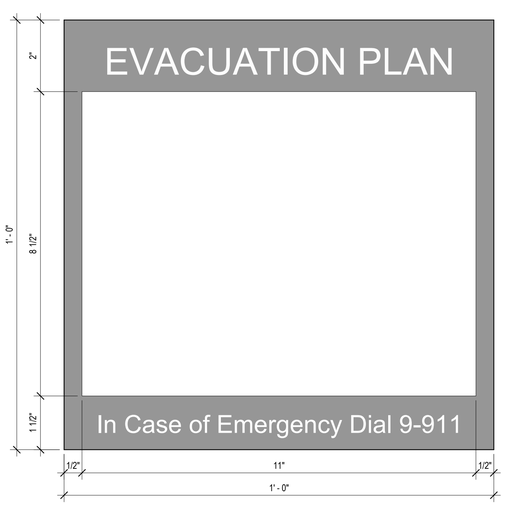

SIGNAGE TYPE E.1 - EVACUATION PLAN

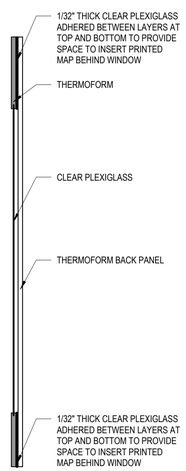

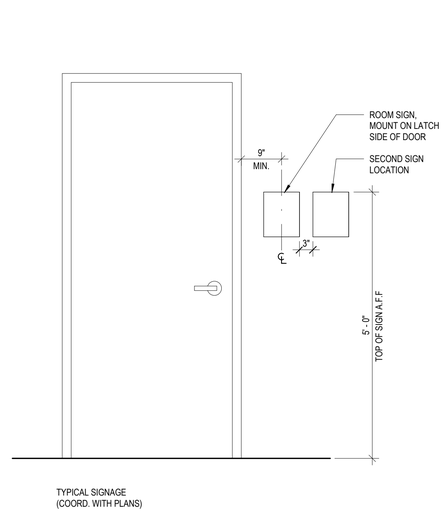

SIGNAGE MOUNTING HEIGHT

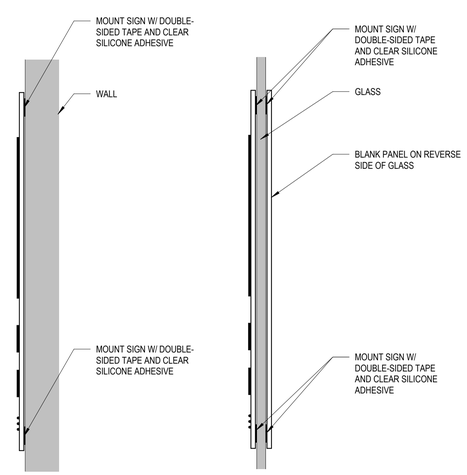

SIGNAGE MOUNTING TYPES

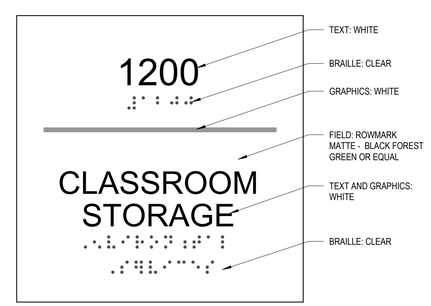

SIGNAGE COLOR SAMPLE

Susan Hatchell
Landscape Architecture, PLLC
711 W. North Street, Raleigh, NC 27603
p: 919-838-9600 f: 919-838-9700

Esse Architects
632 PERSHING ROAD | RALEIGH, NORTH CAROLINA 27608

SIGNAGE DETAILS

LAKE MYRA COUNTY PARK
Wake County, NC

REVISIONS

Esse Architects P.A. Registered Architectural Corporation 52498 North Carolina Raleigh, NC

MIRANDA DOWNER POTTHOFF Registered Architect 11053 North Carolina Raleigh, NC 7/27/2026

Signature by: Miranda Potthoff
1EC9A8A8B028488...

Date: 07/27/26

PC-A136

Docusign Envelope ID: 8BDE9837-570C-8E6A-8205-A6B2A1B21988

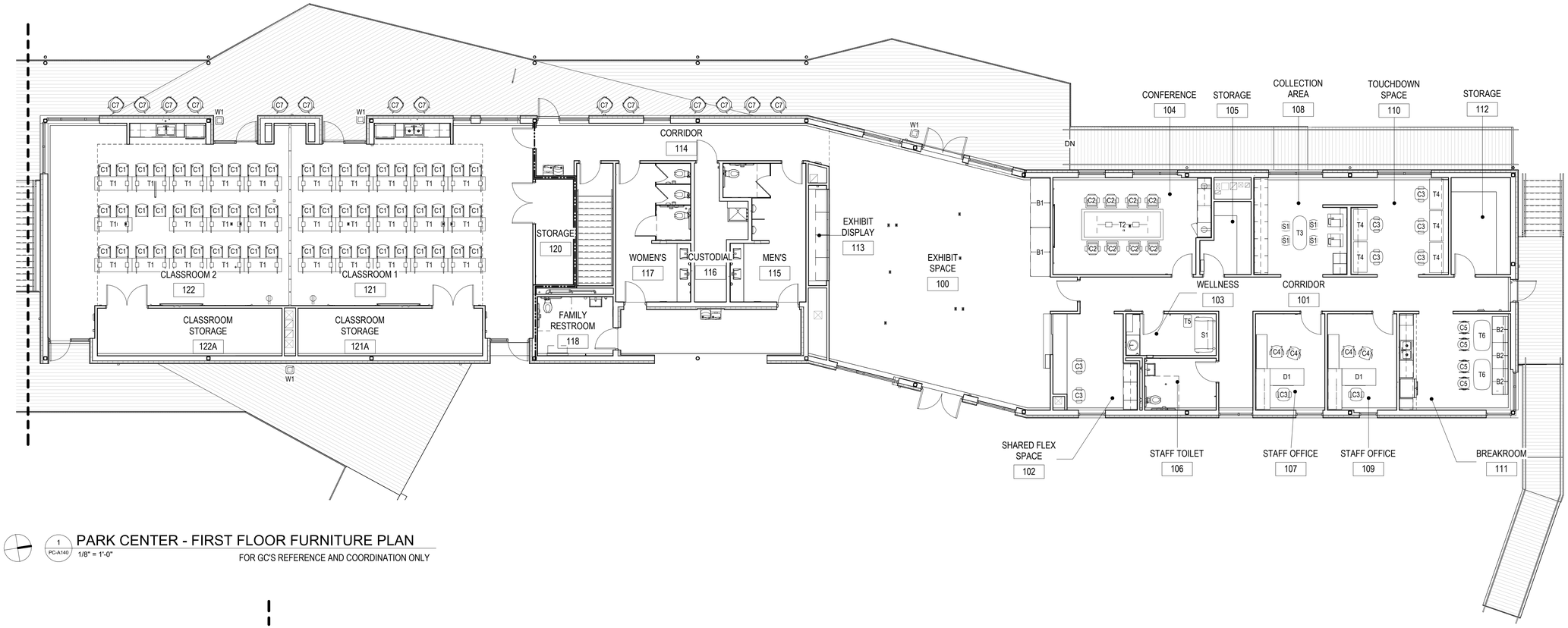

1 PC-A140 PARK CENTER - FIRST FLOOR FURNITURE PLAN
1/8" = 1'-0"
FOR GC'S REFERENCE AND COORDINATION ONLY

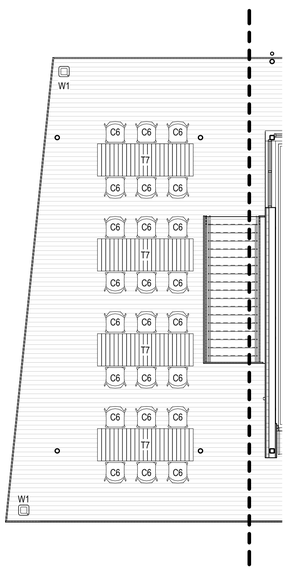

2 PC-A140 PARK CENTER DECK - FURNITURE PLAN
1/8" = 1'-0"
FOR GC'S REFERENCE AND COORDINATION ONLY

FURNITURE SCHEDULE

MARK	DESCRIPTION	QUANTITY
B1	UPHOLSTERED BENCH	2
B2	UPHOLSTERED BOOTH SEATING	3
C1	CUSHIONED STACKING CHAIR	60
C2	CONFERENCE CHAIR	8
C3	UPHOLSTERED TASK SEATING W/ CASTERS	9
C4	GUEST CHAIR	4
C5	CAFE CHAIR	4
C6	OUTDOOR CHAIR	24
C7	OUTDOOR ROCKING CHAIR	14
D1	WORKSTATION WITH FIXED WORKSURFACE, ADJUSTABLE HEIGHT COMPUTER WORKSTATION, AND FILE STORAGE	2
S1	LOUNGE SOFA	5
T1	TRAINING TABLES	29
T2	CONFERENCE TABLE	1
T3	BAR HEIGHT TABLE W/ CASTERS	1
T4	FREE STANDING WORKSTATION W/ INTEGRATED CHARGING	5
T5	ROLLING END TABLE	1
T6	CAFE TABLE	2
T7	OUTDOOR TABLE	4
W1	WASTE BIN	6

Susan Hatchell
Landscape Architecture, PLLC
711 W. North Street, Raleigh, NC 27603
p: 919-838-9600 f: 919-838-9700

Esse Architects
EST. PERSONAL LEGAL | RALEIGH, NORTH CAROLINA 27608

FURNITURE PLAN

LAKE MYRA COUNTY PARK
Wake County, NC

REVISIONS

Esse Architects P.A. Registered Architectural Corporation 52498 North Carolina Raleigh, NC

MIRANDA DONNER ROTHOFF Registered Architect 11863 North Carolina Raleigh, NC
Miranda Rothoff
7/27/2026

Date: 07/27/26

PC-A140

Docusign Envelope ID: 8BDE9837-570C-8E6A-8205-A6B2A1B21988

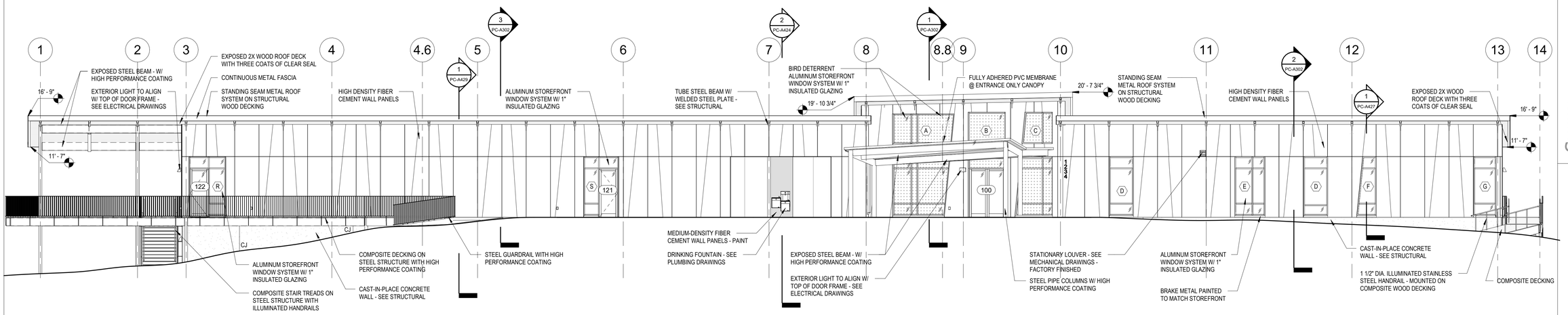

1 PC-A201 PARK CENTER - EAST ELEVATION
1/8" = 1'-0"

NOTES
1. WALL CONTROL JOINT LOCATIONS DEPICTED WITH THE ANNOTATION "**CJ**" - SEE ELEVATIONS AND CONTROL JOINT PLAN

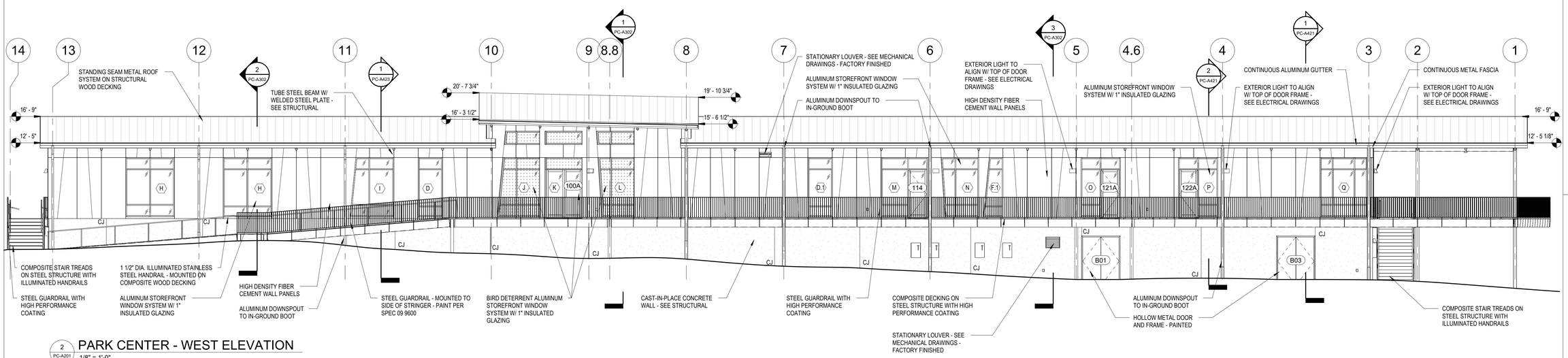

2 PC-A201 PARK CENTER - WEST ELEVATION
1/8" = 1'-0"

EXTERIOR MATERIAL SCHEDULE - PARK CENTER

WALLS	
HIGH DENSITY FIBER CEMENT PANELS	SWISSPEARL - AVERA - AV100+AV060
MEDIUM DENSITY FIBER CEMENT PANELS	HIGH PERFORMANCE COATING - SW 7048 - URBANE BRONZE
ROOF	
STANDING SEAM METAL PANELS	PAC-CLAD - TITE-LOCK - GRANITE
SOFFITS	EXPOSED WOOD DECKING WITH THREE COATS CLEAR SEAL
METAL FASCIA TRIM, GUTTERS, & DOWNSPOUTS	HIGH PERFORMANCE COATING - SW 7048 - URBANE BRONZE
STOREFRONT, GUTTERS, DOWNSPOUTS, AND TRIM	
STOREFRONT	PAINTED SHERWIN WILLIAMS SW 6438 - DILL
GUTTERS AND DOWNSPOUTS	HIGH PERFORMANCE COATING - SW 7048 - URBANE BRONZE

STEEL	
EXPOSED STRUCTURE INTERIOR + EXTERIOR	HIGH PERFORMANCE COATING - SW 7048 - URBANE BRONZE
GUARDRAILS	HIGH PERFORMANCE COATING - SW 7048 - URBANE BRONZE
DOORS AND FRAMES	HIGH PERFORMANCE COATING - SEE DOOR SCHEDULE FOR FINISH
GLAZING	
VISION GLASS	LOW-E CLEAR GLASS
BIRD DETERRENT GLASS	LOW-E CLEAR GLASS W/ BIRD DETERRENT PATTERN
FLOORING	
COMPOSITE DECKING	MOISTURESHIELD - ELEVATE - LAKE FOG

NOTES:
1. ALL FINISHES NOTED HERE REPRESENT THE BASIS OF DESIGN - SEE SPECIFICATIONS FOR THREE EQUALS
2. ALL EXTERIOR PAINTS TO BE HIGH-PERFORMANCE COATINGS PER SPEC SECTION 09 9600.

Susan Hatchell
Landscape Architecture, PLLC
711 W. North Street, Raleigh, NC 27603
p: 919-838-9600 f: 919-838-9700

Esse Architects
832 PERSHING ROAD | RALEIGH, NORTH CAROLINA 27608

EXTERIOR ELEVATIONS

LAKE MYRA COUNTY PARK
Wake County, NC

REVISIONS

Esse Architects P.A. Registered Architectural Corporation 52498 North Carolina Raleigh, NC

MIRANDA DOWNER POTTHOFF Registered Architect 11683 North Carolina Raleigh, NC 7/27/2026

Date: 07/27/26

PC-A201

Docusign Envelope ID: 8BDE9837-570C-8E6A-8205-A6B2A1B21988

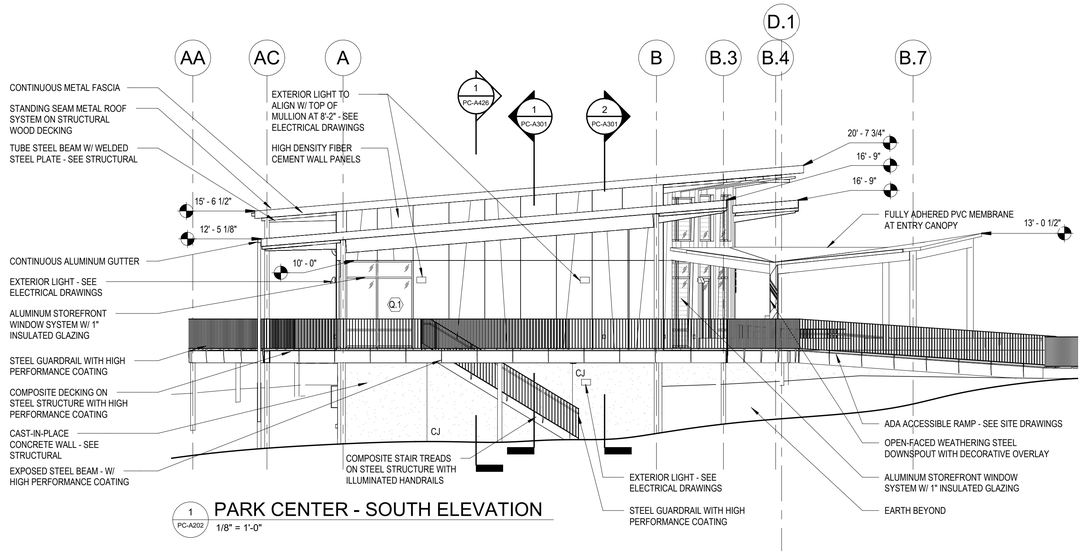

1 PC-A202 PARK CENTER - SOUTH ELEVATION
1/8" = 1'-0"

NOTES
1. WALL CONTROL JOINT LOCATIONS DEPICTED WITH THE ANNOTATION "**CJ**" - SEE ELEVATIONS AND CONTROL JOINT PLAN

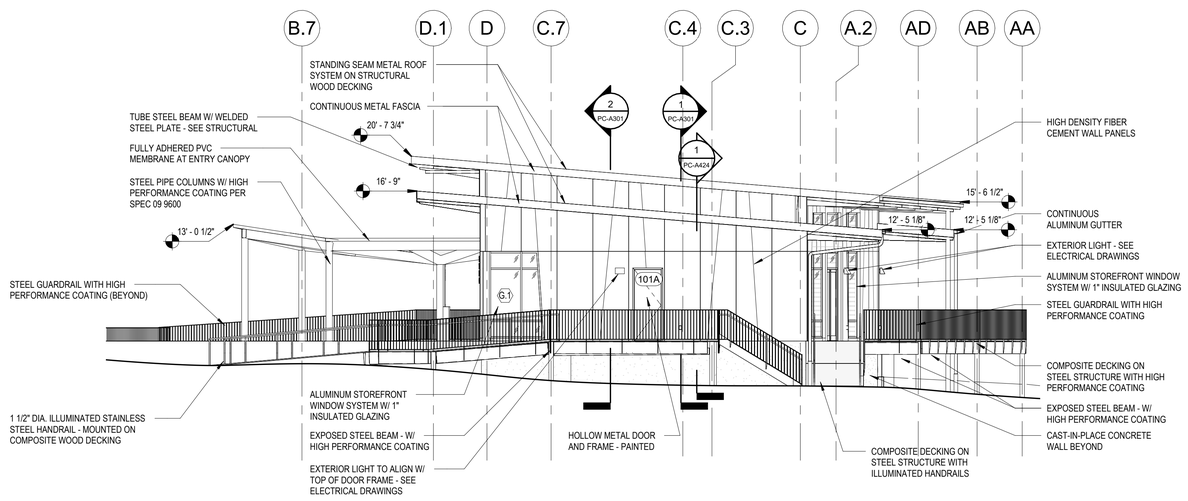

2 PC-A202 PARK CENTER - NORTH ELEVATION
1/8" = 1'-0"

EXTERIOR MATERIAL SCHEDULE - PARK CENTER

WALLS	
HIGH DENSITY FIBER CEMENT PANELS	SWISSPEARL - AVERA - AV100+AV060
MEDIUM DENSITY FIBER CEMENT PANELS	HIGH PERFORMANCE COATING - SW 7048 - URBANE BRONZE
ROOF	
STANDING SEAM METAL PANELS	PAC-CLAD - TITE-LOCK - GRANITE
SOFFITS	EXPOSED WOOD DECKING WITH THREE COATS CLEAR SEAL
METAL FASCIA TRIM, GUTTERS, & DOWNSPOUTS	HIGH PERFORMANCE COATING - SW 7048 - URBANE BRONZE
STOREFRONT, GUTTERS, DOWNSPOUTS, AND TRIM	
STOREFRONT	PAINTED SHERWIN WILLIAMS SW 6438 - DILL
GUTTERS AND DOWNSPOUTS	HIGH PERFORMANCE COATING - SW 7048 - URBANE BRONZE

STEEL	
EXPOSED STRUCTURE INTERIOR + EXTERIOR	HIGH PERFORMANCE COATING - SW 7048 - URBANE BRONZE
GUARDRAILS	HIGH PERFORMANCE COATING - SW 7048 - URBANE BRONZE
DOORS AND FRAMES	HIGH PERFORMANCE COATING - SEE DOOR SCHEDULE FOR FINISH
GLAZING	
VISION GLASS	LOW-E CLEAR GLASS
BIRD DETERRENT GLASS	LOW-E CLEAR GLASS W/ BIRD DETERRENT PATTERN
FLOORING	
COMPOSITE DECKING	MOISTURESHIELD - ELEVATE - LAKE FOG

NOTES:
1. ALL FINISHES NOTED HERE REPRESENT THE BASIS OF DESIGN - SEE SPECIFICATIONS FOR THREE EQUALS
2. ALL EXTERIOR PAINTS TO BE HIGH-PERFORMANCE COATINGS PER SPEC SECTION 09 9600.

Susan Hatchell
Landscape Architecture, PLLC
711 W. North Street, Raleigh, NC 27603
p: 919-838-9600 f: 919-838-9700

Esse Architects
632 PERSHING ROAD | RALEIGH, NORTH CAROLINA 27608

EXTERIOR ELEVATIONS

LAKE MYRA COUNTY PARK
Wake County, NC

REVISIONS

Esse Architects P.A. Registered Architectural Corporation 52498 North Carolina Raleigh, NC

MIRANDA DONNER POTTHOFF Registered Architect 11653 North Carolina Raleigh, NC 7/27/2026

Date: 07/27/26

PC-A202

Docusign Envelope ID: 8BDE9837-570C-8E6A-8205-A6B2A1B21988

(12) TWELVE HIGH DENSITY FIBER CEMENT WALL PANELS
(8) EIGHT AV 100 | (4) FOUR AV 060

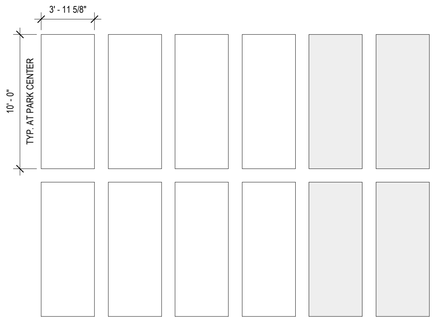

(6) SIX AV 100 PANELS CUT ONCE | (2) TWO AV 060 PANELS CUT ONCE

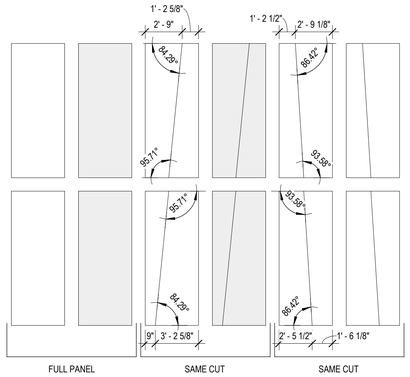

MIX AND MATCH THE PANELS AS FOLLOWS

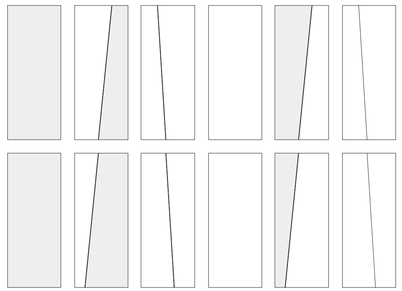

PLACED TOGETHER AND REPEATED AROUND THE BUILDING
WITH GAPS OF 3/8" BETWEEN PANEL SLICES

COLOR MATCHED RIVETS PLACED 3" FROM EDGE OF PANEL
AND SPACED NO MORE THAN 24" APART

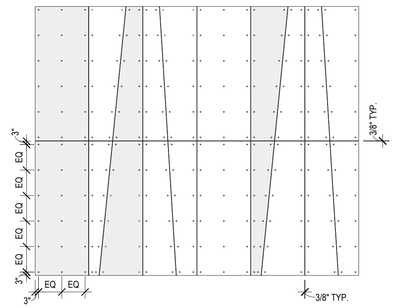

1 PC-A203 PARK CENTER EXTERIOR WALL PATTERN - EXPLODED

3/16" = 1'-0"

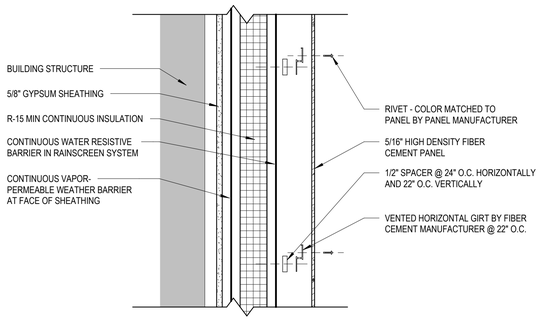

SECTION VIEW

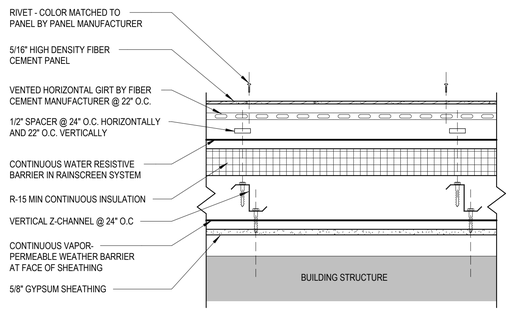

PLAN VIEW

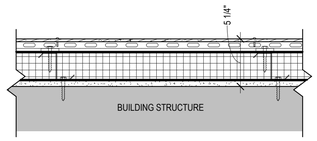

2 PC-A203 EXPLODED PANEL ATTACHMENT

1 1/2" = 1'-0"

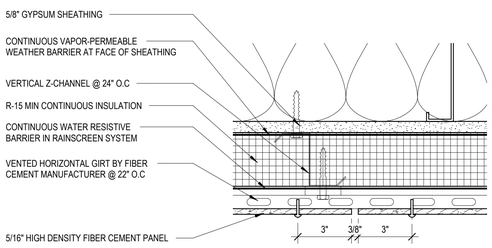

3 PC-A203 DETAIL @ VERTICAL PANEL JOINT

3" = 1'-0"

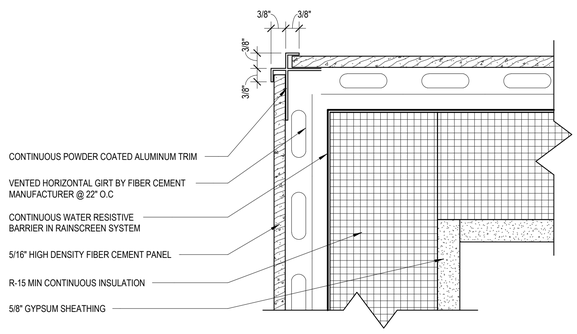

4 PC-A203 CORNER TRIM DETAIL

6" = 1'-0"

NOTE: PROVIDE CONTINUOUS POWDER COATED ALUMINUM TRIM ON ALL OUTSIDE CORNERS INCLUDING CLASSROOM INSETS, WING WALLS, AND ABOVE 90 DEGREE STOREFRONT WINDOWS. SEE FLOOR PLAN AND DETAILS FOR LOCATION CALLOUTS.

Susan Hatchell
Landscape Architecture, PLLC
711 W. North Street, Raleigh, NC 27603
p: 919-838-9600 f: 919-838-9700

Esse Architects
632 PERSHING ROAD | RALEIGH, NORTH CAROLINA 27608

EXTERIOR PANEL LAYOUT

LAKE MYRA COUNTY PARK
Wake County, NC

Esse Architects P.A. Registered Architectural Corporation 52498 North Carolina Raleigh, NC

MIRANDA DOWNER ROTHOFF Registered Architect 11663 Issued by: NCARB Certificate 6102448 North Carolina Raleigh, NC 7/27/2026

REVISIONS

Date: 07/27/26

PC-A203

Docusign Envelope ID: 8BDE9837-570C-8E6A-8205-A6B2A1B21988

NOTES:
1. IMAGE IS FOR REFERENCE, CONFIRM LAYOUT THROUGH SHOP DRAWINGS
2. CENTER VERTICAL PANEL JOINTS WITH THE CENTER OF STEEL BEAMS ABOVE
3. SEE PC-203 FOR HIGH DENSITY FIBER CEMENT PANEL PATTERN AND PLACEMENT

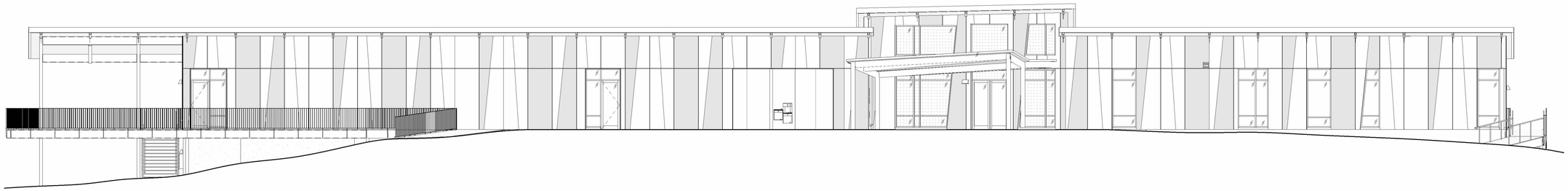

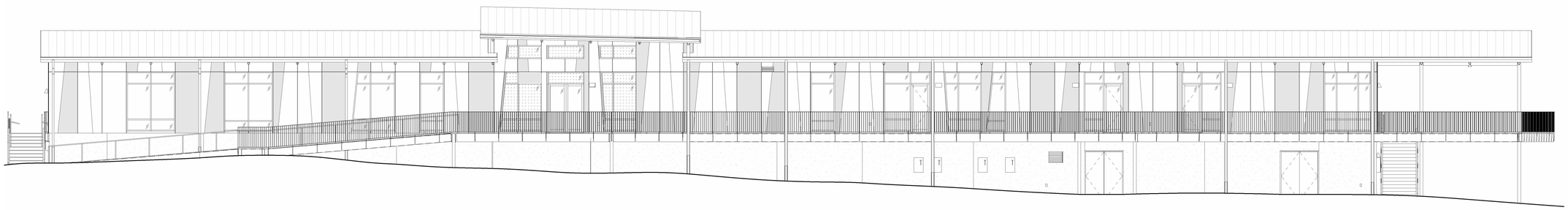

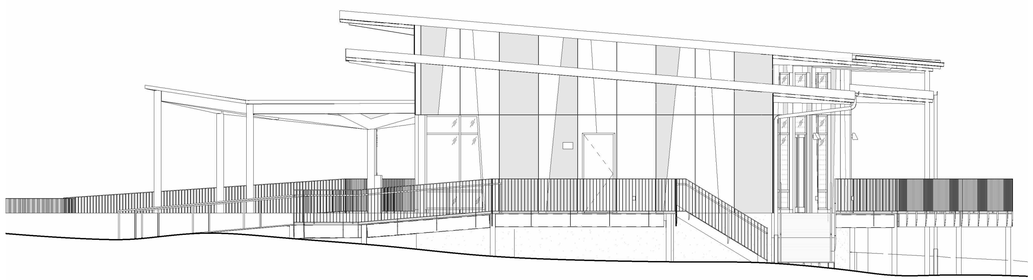

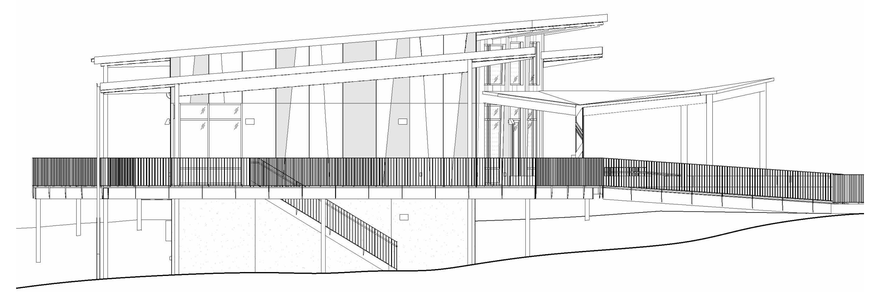

Susan Hatchell
Landscape Architecture, PLLC
711 W. North Street, Raleigh, NC 27603
p: 919-838-9600 f: 919-838-9700

Esse Architects
832 PERSHING ROAD | RALEIGH, NORTH CAROLINA 27608

EXTERIOR PANEL LAYOUT

LAKE MYRA COUNTY PARK
Wake County, NC

REVISIONS

Esse Architects P.A.
Registered Architectural Corporation
52498
North Carolina
Raleigh, NC

MIRANDA DOWNER ROTTHOFF
Registered Architect
Signature
1,663
Miranda Rotthoff
Serial: 1EC94BA8B0B4B4A
North Carolina
Raleigh, NC
7/27/2026

Date: 07/27/26

PC-A204

Docusign Envelope ID: 8BDE9837-570C-8E6A-8205-A6B2A1B21988

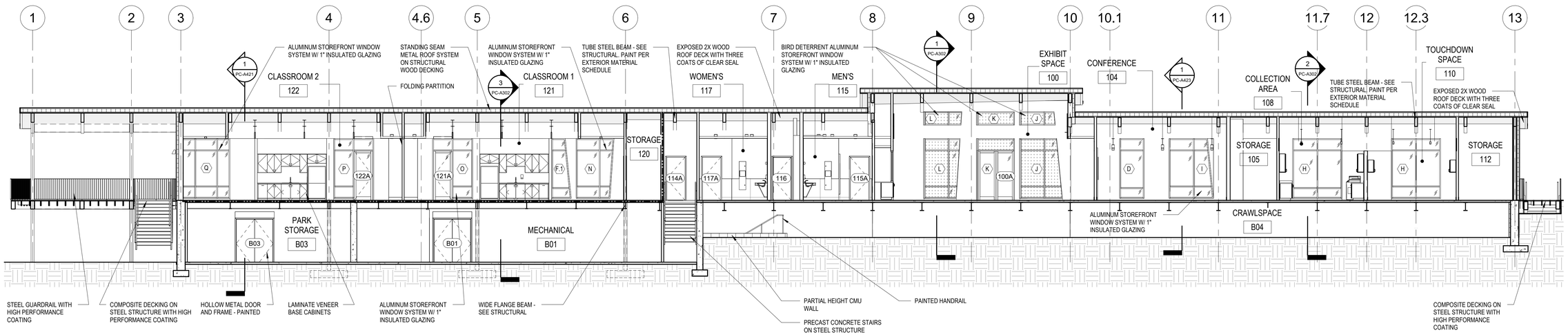

1 PC-A301 PARK CENTER - LONGITUDINAL BACK SECTION
1/8" = 1'-0"

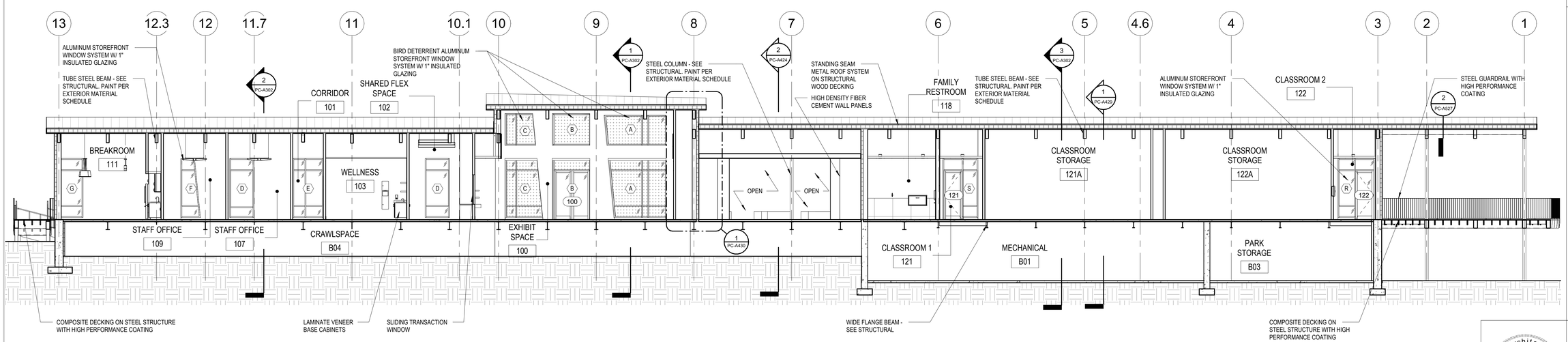

2 PC-A301 PARK CENTER - LONGITUDINAL FRONT SECTION
1/8" = 1'-0"

Susan Hatchell
Landscape Architecture, PLLC
711 W. North Street, Raleigh, NC 27603
p: 919-838-9600 f: 919-838-9700

Esse Architects
830 PERSHING ROAD | RALEIGH, NORTH CAROLINA 27608

BUILDING SECTIONS

LAKE MYRA COUNTY PARK
Wake County, NC

REVISIONS

Esse Architects P.A.
Registered Architectural Corporation
52498
Raleigh, North Carolina

MIRANDA DOWNER POTTHOFF
Registered Architect
11653
Raleigh, North Carolina
7/27/2026

Date: 07/27/26

PC-A301

Docusign Envelope ID: 8BDE9837-570C-8E6A-8205-A6B2A1B21988

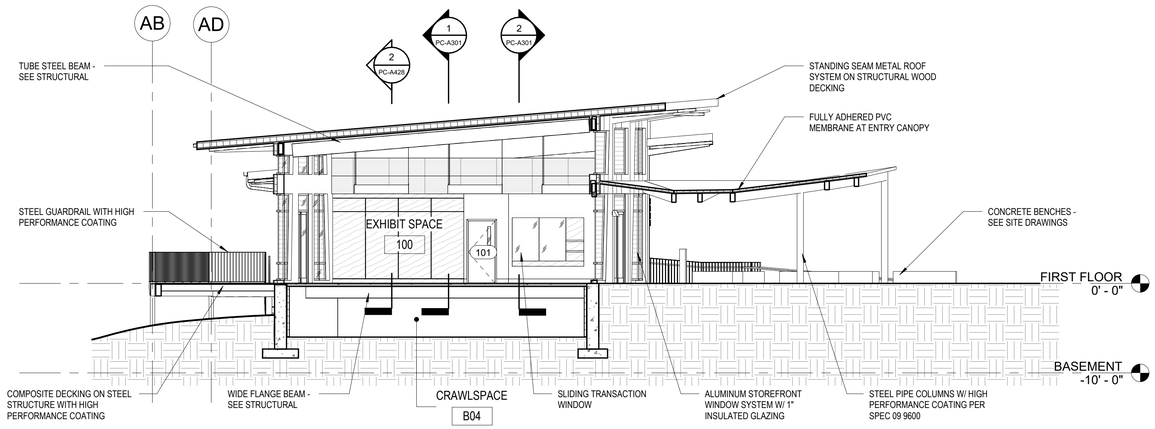

1 PC-A302 PARK CENTER - TRANSVERSE SECTION THROUGH EXHIBIT SPACE
1/8" = 1'-0"

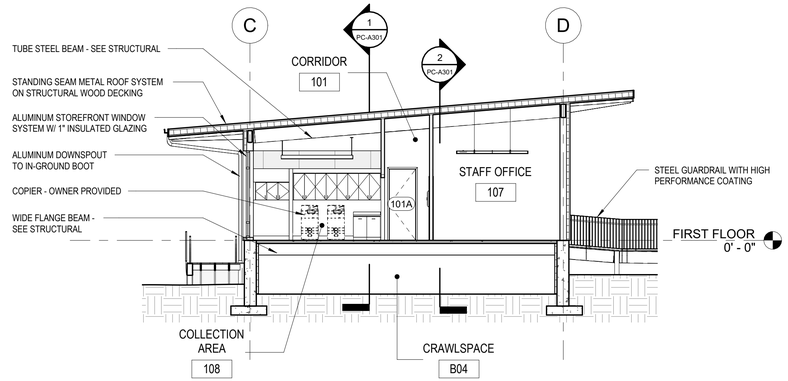

2 PC-A302 PARK CENTER - TRANSVERSE SECTION THROUGH ADMIN
1/8" = 1'-0"

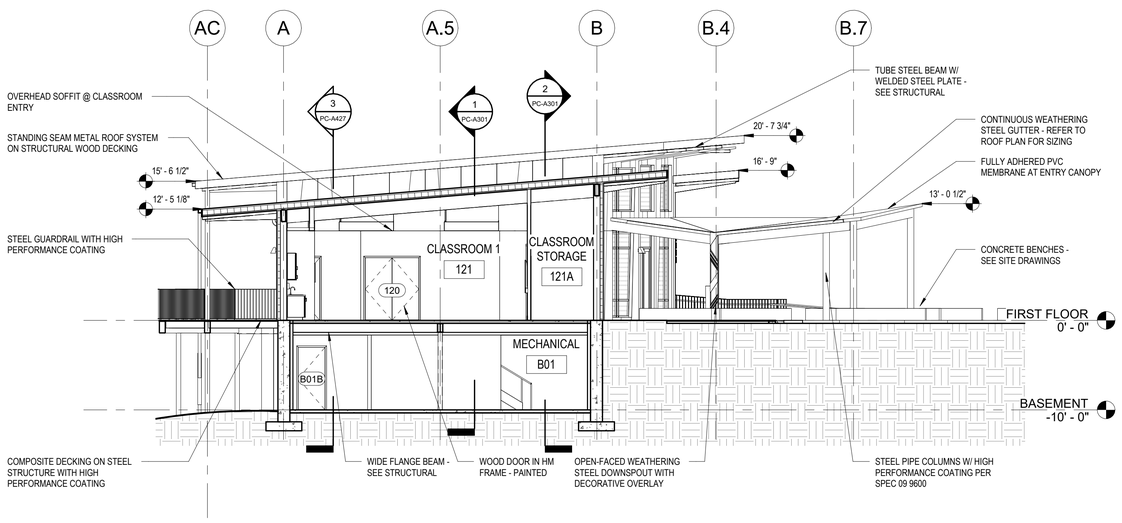

3 PC-A302 PARK CENTER - TRANSVERSE SECTION THROUGH CLASSROOM
1/8" = 1'-0"

Susan Hatchell
Landscape Architecture, PLLC
711 W. North Street, Raleigh, NC 27603
p: 919-838-9600 f: 919-838-9700

Esse Architects
832 PERSHING ROAD | RALEIGH, NORTH CAROLINA 27608

BUILDING SECTIONS

LAKE MYRA COUNTY PARK
Wake County, NC

REVISIONS

Esse Architects P.A. Registered Architectural Corporation 52498 North Carolina Raleigh, NC

MIRANDA DOWNER POTTHOFF Registered Architect 17663 Licensed North Carolina Raleigh, NC 7/27/2026

Date: 07/27/26

PC-A302

Docusign Envelope ID: 8BDE9837-570C-8E6A-8205-A6B2A1B21988

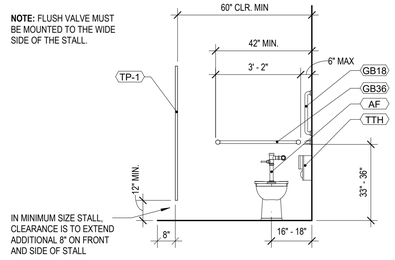

A

ADA TOILET STALL, FRONT ELEVATION

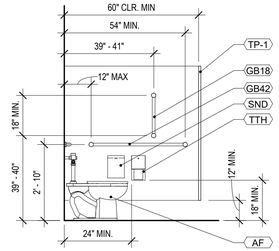

A

ADA TOILET STALL, SIDE ELEVATION

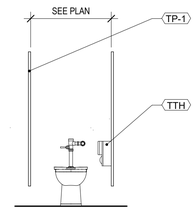

B

NON - ADA TOILET STALL, FRONT ELEVATION

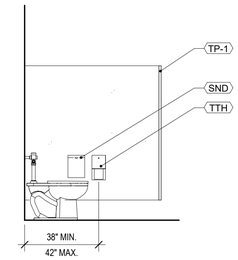

B

NON - ADA TOILET STALL, SIDE ELEVATION

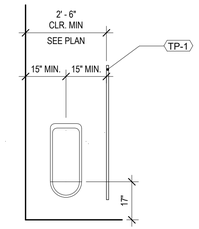

C

TYP. ADA URINAL, FRONT ELEVATION

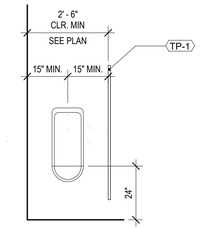

D

TYP. NON - ADA URINAL, FRONT ELEVATION

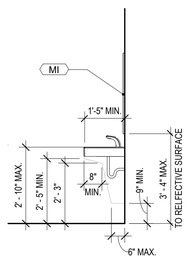

E

ADA WALL - MOUNTED SINK, SIDE ELEVATION

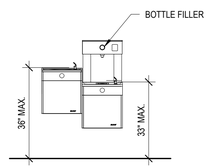

J

ADA WATER FOUNTAIN, FRONT ELEVATION

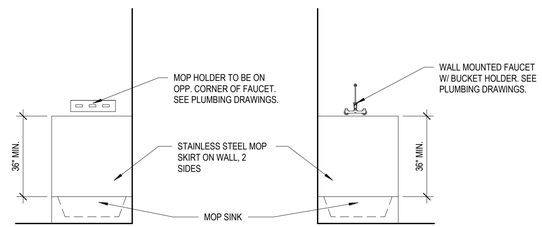

K

MOP SINK, SIDE ELEVATIONS

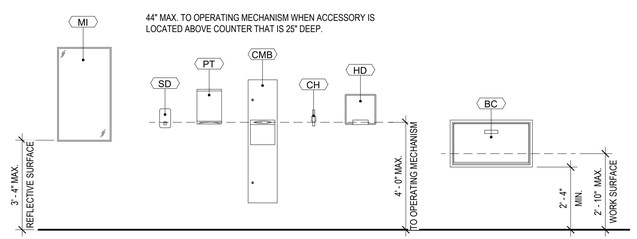

TOILET ACCESSORY MOUNTING HEIGHTS

SYMBOL LEGEND

X-X	FINISH TAG
X	TOILET ASSEMBLY TAG. SEE A400 FOR ADDITIONAL INFORMATION
#	PARTITION TAG

TOILET ACCESSORIES LEGEND

AF	ACCESSIBLE FIXTURE
BC	BABY CHANGING STATION - SURFACE MOUNTED
CF	CLEAR FLOOR SPACE 30" x 52"
CH	COAT HOOK
CMB	COMBINED PAPER TOWEL/TRASH
FD	FLOOR DRAIN - SEE PLUMBING DRAWINGS
GB18	GRAB BAR 18" LONG (VERTICAL)
GB32	GRAB BAR 32" LONG (REAR WALLS)
GB36	GRAB BAR 36" LONG (REAR WALLS)
GB42	GRAB BAR 42" LONG (SIDE WALLS)
MI	MIRROR 24" X 36"
PT	PAPER TOWEL DISPENSER
SD	SOAP DISPENSER
SND	SANITARY NAPKIN DISPOSAL
TD	67" ACCESSIBLE TURNING DIAMETER
TP	TOILET PARTITION
TTH	TOILET TISSUE HOLDER

NOTES:

1. PLUMBING CONTRACTOR TO PROVIDE PROTECTIVE INSULATION AT HOT PIPES BELOW LAVATORY PER ACCESSIBILITY CODE.
2. FLUSH CONTROL VALVES AT ACCESSIBLE TOILETS TO BE MOUNTED ON THE WIDE SIDE OF TOILET STALL OR ROOM.
3. SEE SPECIFICATIONS FOR DETAILS OF TOILET ACCESSORIES.
4. ALL TOILET PARTITIONS ARE FLOOR MOUNTED AND OVERHEAD BRACED.
5. SLOPE FLOOR TILE TO DRAIN WITH MUD BED. THRESHOLDS SLOPE IN DOOR OPENINGS SHALL NOT EXCEED 1:8 SLOPE OR 1/2" IN HEIGHT PER ACCESSIBILITY CODE.

Susan Hatchell
Landscape Architecture, PLLC
711 W. North Street, Raleigh, NC 27603
p: 919-838-9600 f: 919-838-9700

Esse Architects
632 PERSHING ROAD | RALEIGH, NORTH CAROLINA 27608

TYPICAL TOILET AND BATH ACCESSORIES

LAKE MYRA COUNTY PARK
Wake County, NC

REVISIONS

Esse Architects P.A. Registered Architectural Corporation 52498 North Carolina Raleigh, NC

MIRANDA DOWNER POTTHOFF Registered Architect 11663 North Carolina Raleigh, NC
Miranda Potthoff
DocuSign Envelope ID: 1EC4586B-B624-8B4
7/27/2026

Date: 07/27/26

PC-A400

Docusign Envelope ID: 8BDE9837-570C-8E6A-8205-A6B2A1B21988

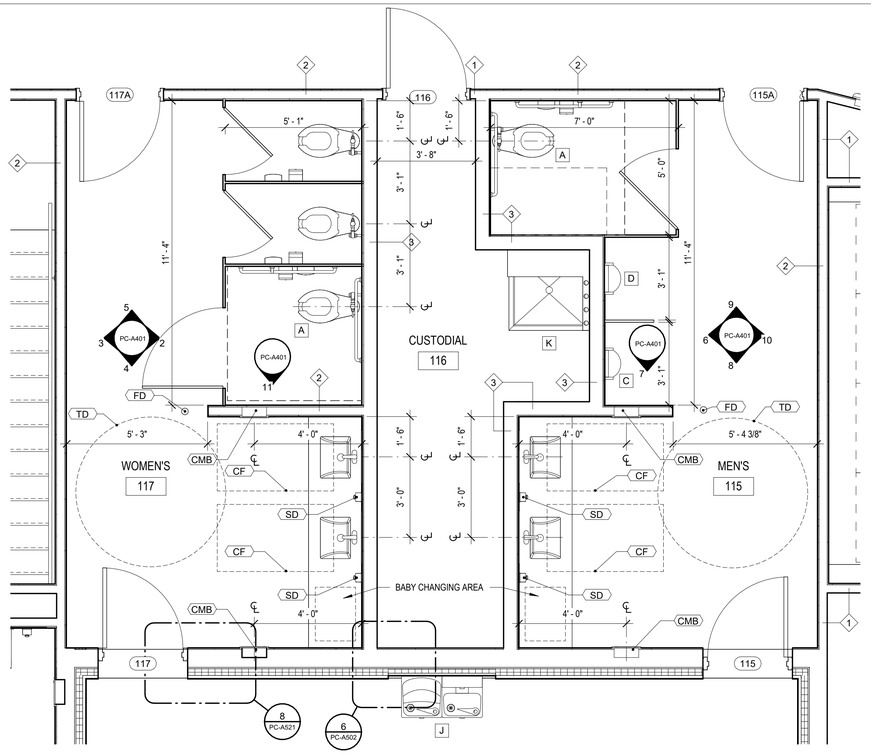

1 PC-A401 WOMEN'S (117) & MEN'S (115) - ENLARGED PLAN
3/8" = 1'-0"

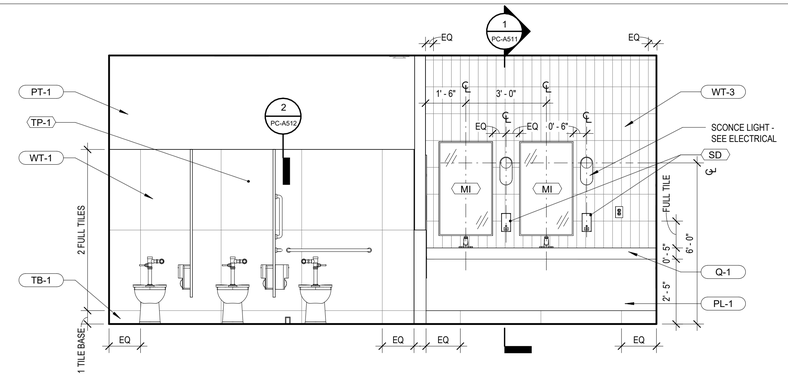

2 PC-A401 WOMEN'S (117) - EAST ELEVATION
3/8" = 1'-0"

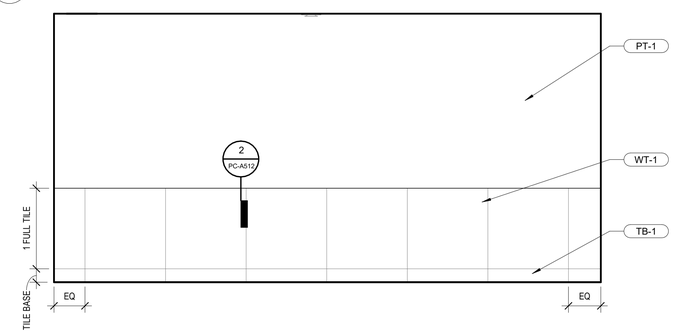

3 PC-A401 WOMEN'S (117) - WEST ELEVATION
3/8" = 1'-0"

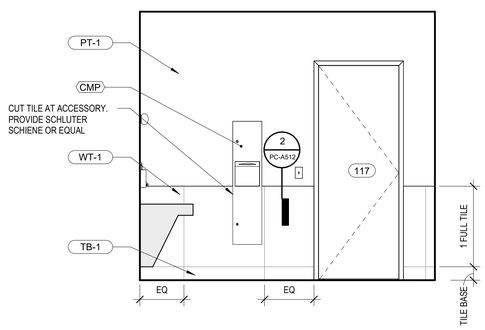

4 PC-A401 WOMEN'S (117) - SOUTH ELEVATION
3/8" = 1'-0"

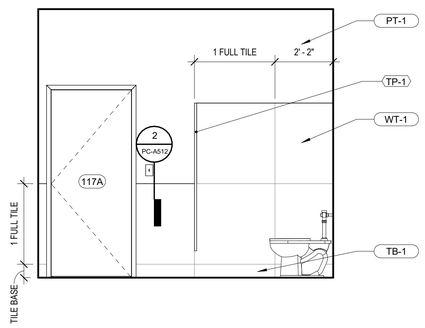

5 PC-A401 WOMEN'S (117) - NORTH ELEVATION
3/8" = 1'-0"

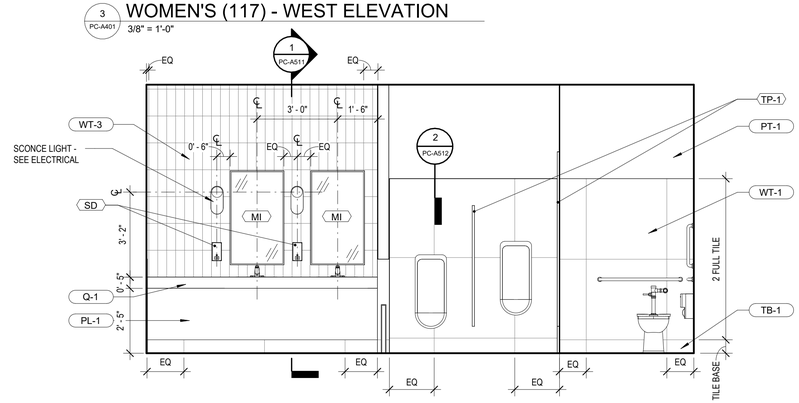

6 PC-A401 MEN'S (115) - WEST ELEVATION
3/8" = 1'-0"

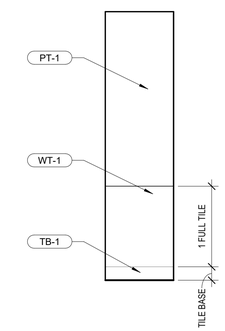

7 PC-A401 SIDE WALL @ URINAL
3/8" = 1'-0"

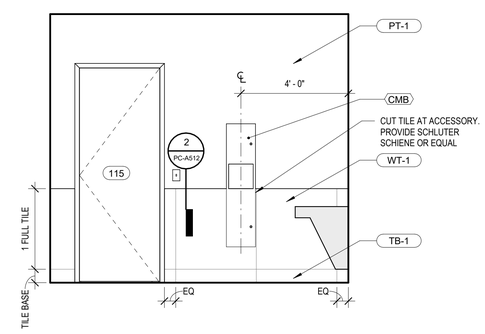

8 PC-A401 MEN'S (115) - SOUTH ELEVATION
3/8" = 1'-0"

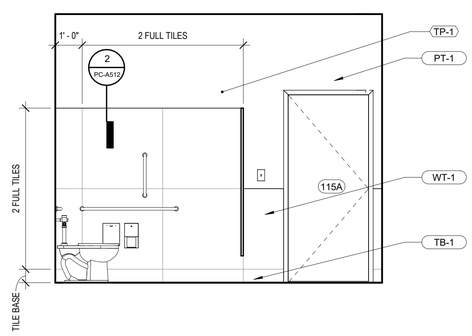

9 PC-A401 MEN'S (115) - NORTH ELEVATION
3/8" = 1'-0"

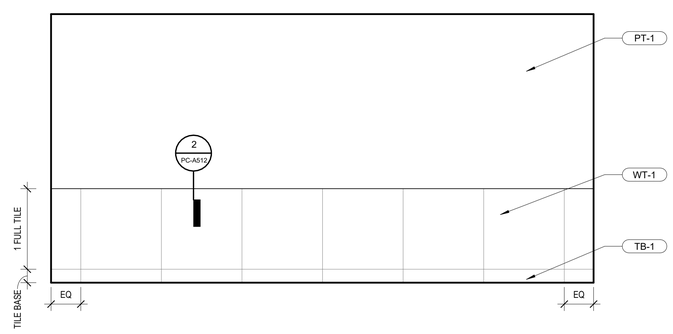

10 PC-A401 MEN'S (115) - EAST ELEVATION
3/8" = 1'-0"

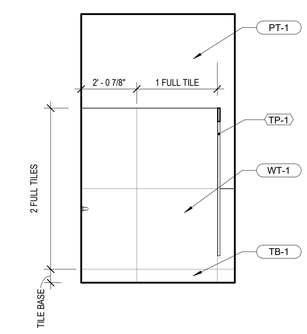

11 PC-A401 SIDE WALL @ TOILET
3/8" = 1'-0"

SYMBOL LEGEND

X-X	FINISH TAG
X	TOILET ASSEMBLY TAG. SEE A400 FOR ADDITIONAL INFORMATION
#	PARTITION TAG

TOILET ACCESSORIES LEGEND

AF	ACCESSIBLE FIXTURE
BC	BABY CHANGING STATION - SURFACE MOUNTED
CF	CLEAR FLOOR SPACE 30" x 52"
CH	COAT HOOK
CMB	COMBINED PAPER TOWEL/TRASH
FD	FLOOR DRAIN - SEE PLUMBING DRAWINGS
GB18	GRAB BAR 18" LONG (VERTICAL)
GB32	GRAB BAR 32" LONG (REAR WALLS)
GB36	GRAB BAR 36" LONG (REAR WALLS)
GB42	GRAB BAR 42" LONG (SIDE WALLS)
MI	MIRROR 24" X 36"
PT	PAPER TOWEL DISPENSER
SD	SOAP DISPENSER
SND	SANITARY NAPKIN DISPOSAL
TD	67" ACCESSIBLE TURNING DIAMETER
TP	TOILET PARTITION
TTH	TOILET TISSUE HOLDER

NOTES:

1. PLUMBING CONTRACTOR TO PROVIDE PROTECTIVE INSULATION AT HOT PIPES BELOW LAVATORY PER ACCESSIBILITY CODE.
2. FLUSH CONTROL VALVES AT ACCESSIBLE TOILETS TO BE MOUNTED ON THE WIDE SIDE OF TOILET STALL OR ROOM.
3. SEE SPECIFICATIONS FOR DETAILS OF TOILET ACCESSORIES.
4. ALL TOILET PARTITIONS ARE FLOOR MOUNTED AND OVERHEAD BRACED.
5. SLOPE FLOOR TILE TO DRAIN WITH MUD BED. THRESHOLDS SLOPE IN DOOR OPENINGS SHALL NOT EXCEED 1:8 SLOPE OR 1/2" IN HEIGHT PER ACCESSIBILITY CODE.

Susan Hatchell
Landscape Architecture, PLLC
711 W. North Street, Raleigh, NC 27603
p: 919-838-9600 f: 919-838-9700

Esse Architects
832 PERSHING ROAD | RALEIGH, NORTH CAROLINA 27608

ENLARGED TOILET PLANS AND ELEVATIONS

LAKE MYRA COUNTY PARK
Wake County, NC

Esse Architects P.A. Registered Architectural Corporation 52498 North Carolina Raleigh, NC

MIRANDA DONNER POTTHOFF Registered Architect 11863 Licensed to Practice Architecture Raleigh, NC 7/27/2026

REVISIONS

Date: 07/27/26

PC-A401

Docusign Envelope ID: 8BDE9837-570C-8E6A-8205-A6B2A1B21988

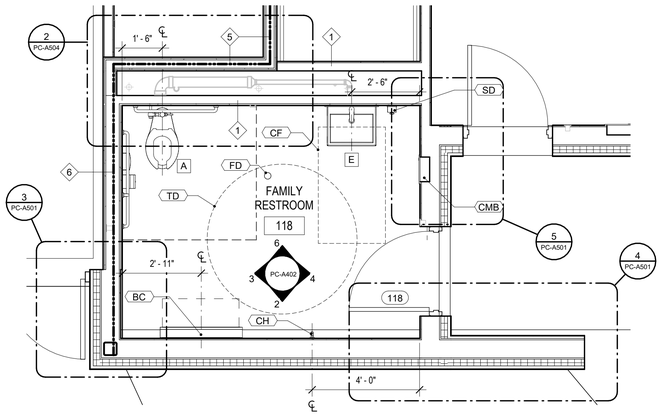

1 PC-A402 FAMILY RESTROOM (118) - ENLARGED RESTROOM
3/8" = 1'-0"

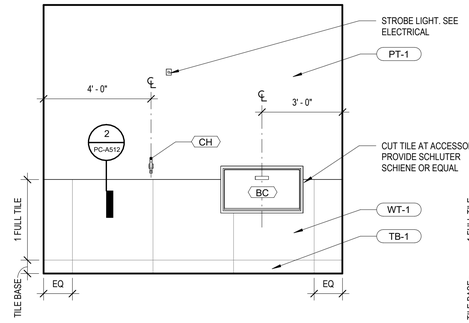

2 PC-A402 FAMILY RR (118) - SOUTH ELEVATION
3/8" = 1'-0"

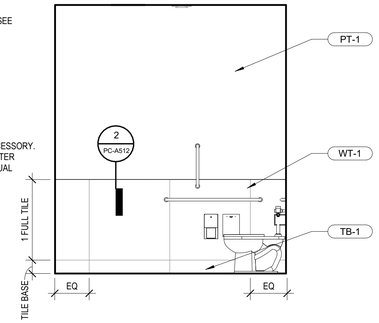

3 PC-A402 FAMILY RR (118) - WEST ELEVATION
3/8" = 1'-0"

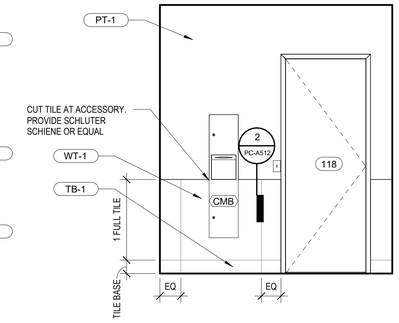

4 PC-A402 FAMILY RR (118) - EAST ELEVATION
3/8" = 1'-0"

SYMBOL LEGEND

X-X	FINISH TAG
X	TOILET ASSEMBLY TAG. SEE A400 FOR ADDITIONAL INFORMATION
#	PARTITION TAG

TOILET ACCESSORIES LEGEND

#	
AF	ACCESSIBLE FIXTURE
BC	BABY CHANGING STATION - SURFACE MOUNTED
CF	CLEAR FLOOR SPACE 30" x 52"
CH	COAT HOOK
CMB	COMBINED PAPER TOWEL/TRASH
FD	FLOOR DRAIN - SEE PLUMBING DRAWINGS
GB18	GRAB BAR 18" LONG (VERTICAL)
GB32	GRAB BAR 32" LONG (REAR WALLS)
GB36	GRAB BAR 36" LONG (REAR WALLS)
GB42	GRAB BAR 42" LONG (SIDE WALLS)
MI	MIRROR 24" X 36"
PT	PAPER TOWEL DISPENSER
SD	SOAP DISPENSER
SND	SANITARY NAPKIN DISPOSAL
TD	67" ACCESSIBLE TURNING DIAMETER
TP	TOILET PARTITION
TTH	TOILET TISSUE HOLDER

NOTES:

1. PLUMBING CONTRACTOR TO PROVIDE PROTECTIVE INSULATION AT HOT PIPES BELOW LAVATORY PER ACCESSIBILITY CODE.
2. FLUSH CONTROL VALVES AT ACCESSIBLE TOILETS TO BE MOUNTED ON THE WIDE SIDE OF TOILET STALL OR ROOM.
3. SEE SPECIFICATIONS FOR DETAILS OF TOILET ACCESSORIES.
4. ALL TOILET PARTITIONS ARE FLOOR MOUNTED AND OVERHEAD BRACED.
5. SLOPE FLOOR TILE TO DRAIN WITH MUD BED. THRESHOLDS SLOPE IN DOOR OPENINGS SHALL NOT EXCEED 1:8 SLOPE OR 1/2" IN HEIGHT PER ACCESSIBILITY CODE.

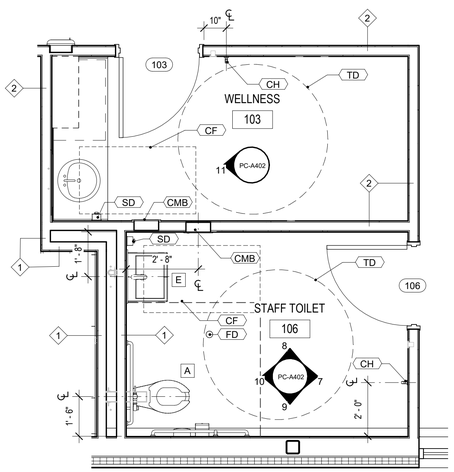

5 PC-A402 STAFF TOILET (106) & WELLNESS (103) - ENLARGED PLAN
3/8" = 1'-0"

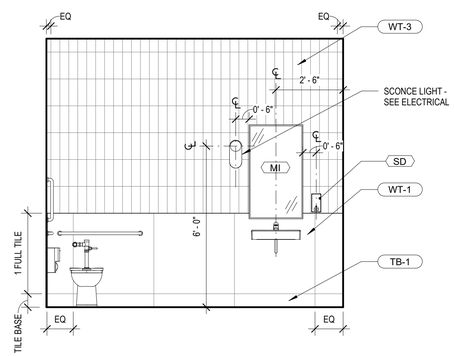

6 PC-A402 FAMILY RESTROOM (118) - NORTH ELEVATION
3/8" = 1'-0"

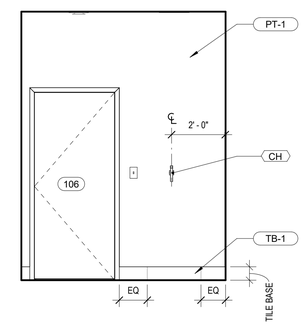

7 PC-A402 STAFF TOILET (106) - EAST ELEVATION
3/8" = 1'-0"

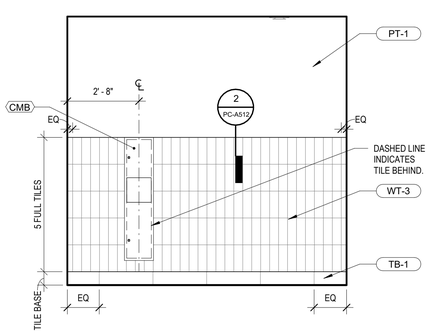

8 PC-A402 STAFF TOILET (106) - NORTH ELEVATION
3/8" = 1'-0"

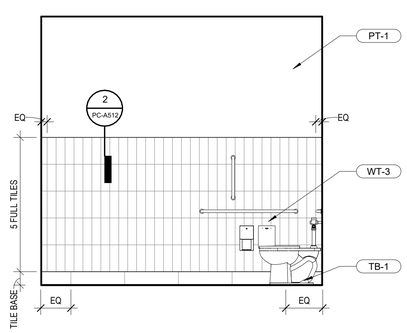

9 PC-A402 STAFF TOILET (106) - SOUTH ELEVATION
3/8" = 1'-0"

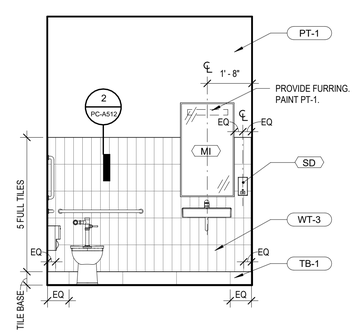

10 PC-A402 STAFF TOILET (106) - WEST ELEVATION
3/8" = 1'-0"

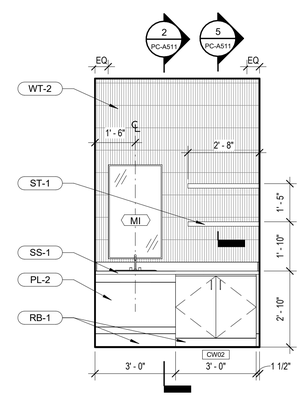

11 PC-A402 WELLNESS ROOM (103) - WEST ELEVATION
3/8" = 1'-0"

Susan Hatchell Landscape Architecture, PLLC
711 W. North Street, Raleigh, NC 27603
p: 919-838-9600 f: 919-838-9700

Esse Architects
632 PERSHING ROAD | RALEIGH, NORTH CAROLINA 27608

ENLARGED TOILET PLANS AND ELEVATIONS

LAKE MYRA COUNTY PARK
Wake County, NC

REVISIONS

Esse Architects P.A. Registered Architectural Corporation 52498 North Carolina Raleigh, NC

MIRANDA DOWNER POTTHOFF Registered Architect 11863 North Carolina Raleigh, NC
Miranda Potthoff
Docusign envelope: 1EC04A8B-0E284B4-8C7A-C4F0-A7A0-7/27/2026

Date: 07/27/26

PC-A402

Docusign Envelope ID: 8BDE9837-570C-8E6A-8205-A6B2A1B21988

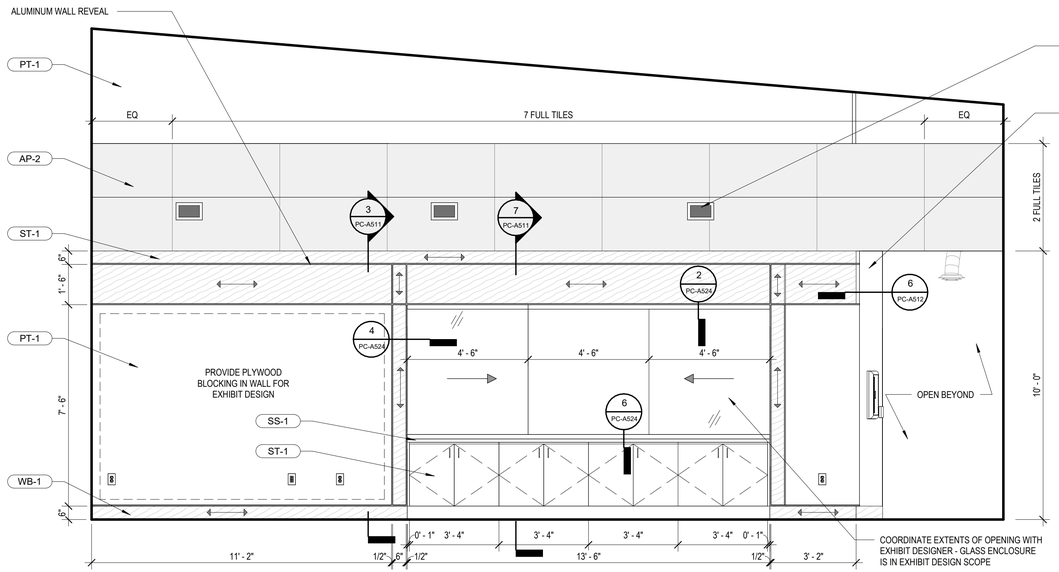

1 PC-A403 EXHIBIT SPACE (100) - WEST ELEVATION
3/8" = 1'-0"

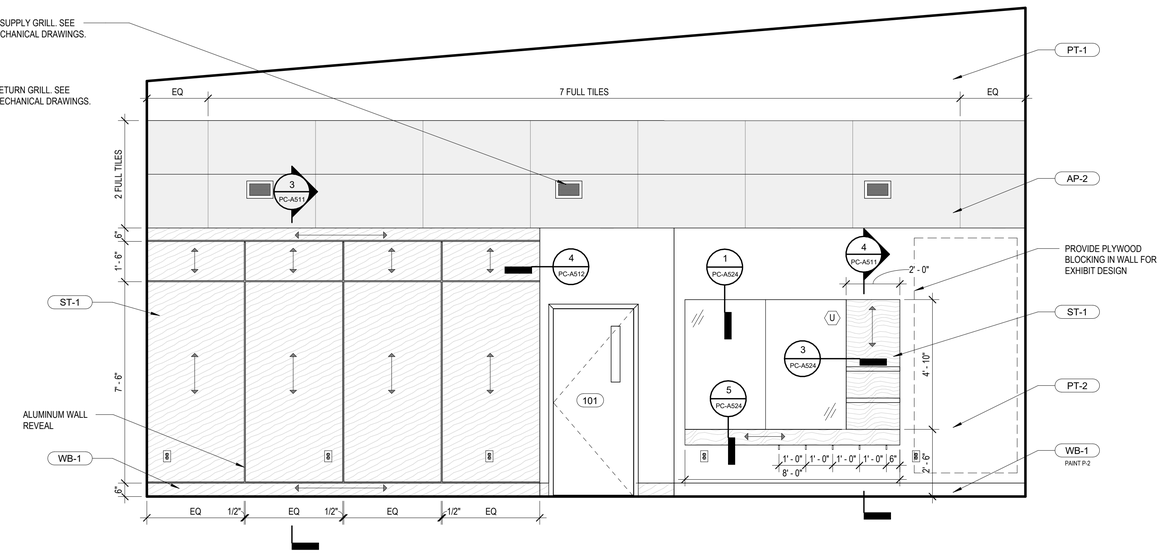

2 PC-A403 EXHIBIT SPACE (100) - EAST ELEVATION
3/8" = 1'-0"

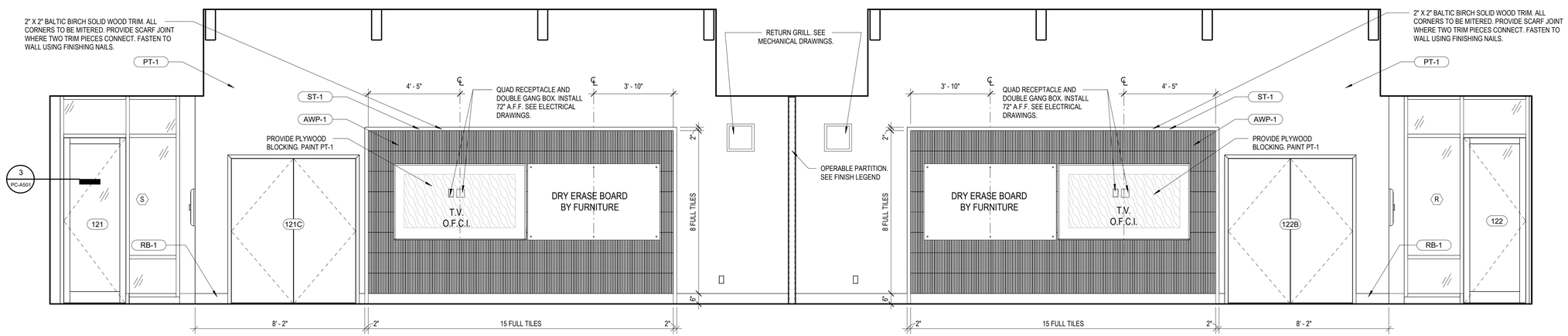

3 PC-A403 CLASSROOM 1 & 2 (121 &122) - SOUTH ELEVATION
3/8" = 1'-0"

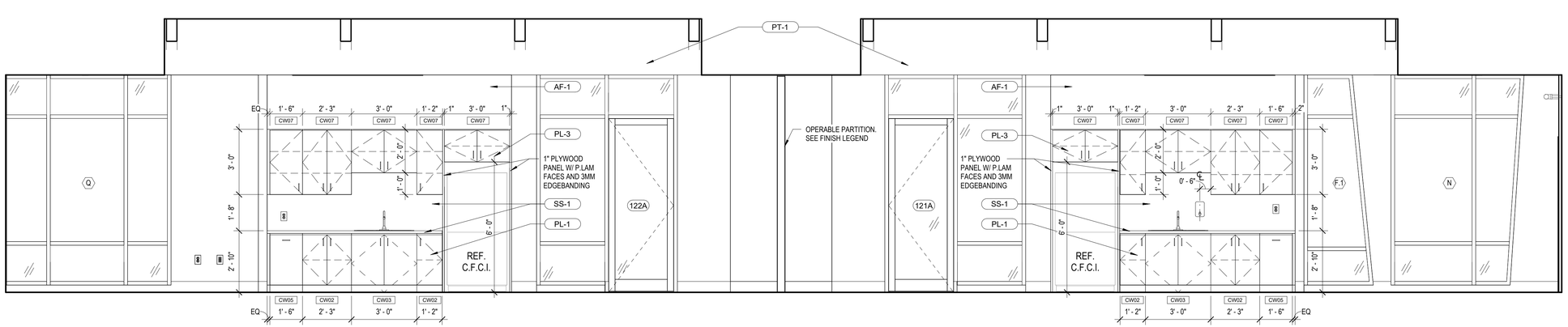

4 PC-A403 CLASSROOM 1 & 2 (121 & 122) - NORTH ELEVATION
3/8" = 1'-0"

Susan Hatchell
Landscape Architecture, PLLC
711 W. North Street, Raleigh, NC 27603
p: 919-838-9600 f: 919-838-9700

Esse Architects
620 PERSHING ROAD | RALEIGH, NORTH CAROLINA 27608

INTERIOR ELEVATIONS

LAKE MYRA COUNTY PARK
Wake County, NC

REVISIONS

Esse Architects P.A. Registered Architectural Corporation 52498 North Carolina Raleigh, NC

MIRANDA DOWNER POTTHOFF Registered Architect 11663 Signature Miranda Potthoff DocuSigned by: 1EC9F0A3BB2B48E... North Carolina Raleigh, NC 7/27/2026

Date: 07/27/26

PC-A403

Docusign Envelope ID: 8BDE9837-570C-8E6A-8205-A6B2A1B21988

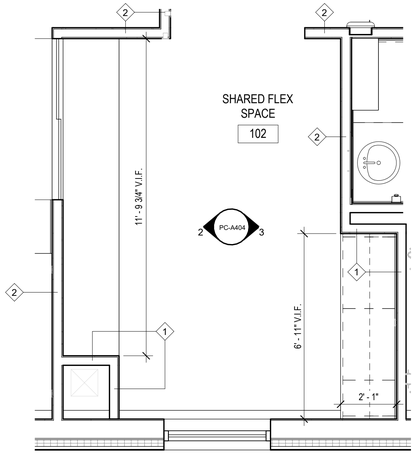

1 PC-A404 SHARED FLEX SPACE (102) - ENLARGED PLAN
3/8" = 1'-0"

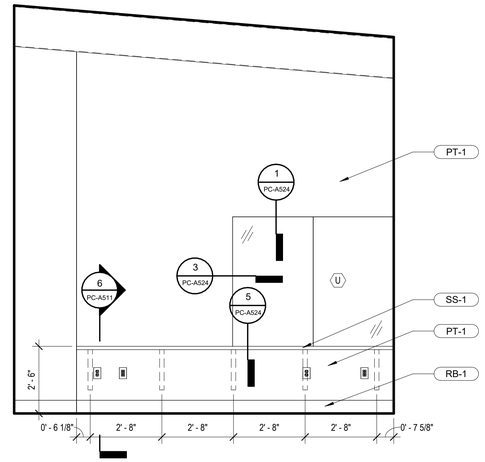

2 PC-A404 SHARED FLEX SPACE (102) - WEST ELEVATION
3/8" = 1'-0"

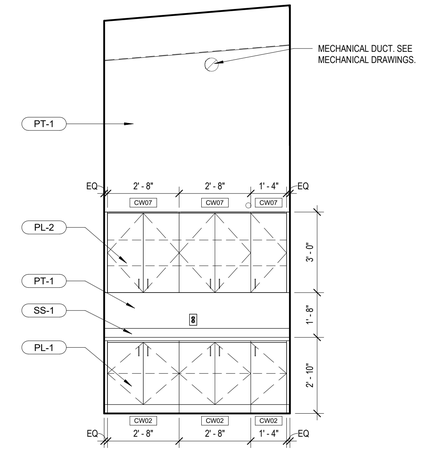

3 PC-A404 SHARED FLEX SPACE (102) - EAST ELEVATION
3/8" = 1'-0"

SYMBOL LEGEND

X-X	FINISH TAG
CWXX	CASEWORK TAG
#	PARTITION TAG

GENERAL CASEWORK NOTES

1. CASEWORK DIMENSIONS SHALL BE FIELD VERIFIED PRIOR TO UNIT FABRICATION AND INSTALLATION.
2. COUNTERTOPS, UNLESS OTHERWISE NOTED, SHALL HAVE A 4" HIGH BACKSPLASH AND SIDE SPLASH SCRIBED TO CONFORM TO THE SURFACE OF ABUTTING WALLS AT BACKS AND ENDS. COUNTERTOPS AND BACKSPLASH SHALL BE CAULKED TO THE WALL.
3. GC SHALL COORDINATE WITH CASEWORK FABRICATOR AND APPROPRIATE SUBCONTRACTORS FOR INSTALLATION OF PLUMBING FIXTURES AND EQUIPMENT WITH ASSOCIATED PIPING AND FITTINGS, AND FOR INSTALLATION OF ELECTRICAL RECEPTACLES, LIGHT FIXTURES, ETC. WITHIN THE CASEWORK.
4. PROVIDE WALL MOUNTED ANGLE SUPPORTS (WHEN EXPOSED FINISH TO MATCH THE COLOR OF ADJACENT WALL) WHERE NECESSARY FOR SUPPORT OF COUNTERTOPS ABOVE KNEE SPACES.
5. PROVIDE SCHEDULED BASE ALONG BOTTOM OF EXPOSED FRONTS, BACKS, SIDES, AND ENDS OF ALL AFFIXED CASEWORK, VERTICAL SUPPORTS, KNEE SPACES, ETC. (U.N.O.)
6. PROVIDE CONCEALED BLOCKING FOR MOUNTING OF ALL SHELVING, HOOKS, DISPENSERS, ETC.
7. ALL OPENINGS IN COUNTERS SHALL BE CUT IN, NOT SEAMED.

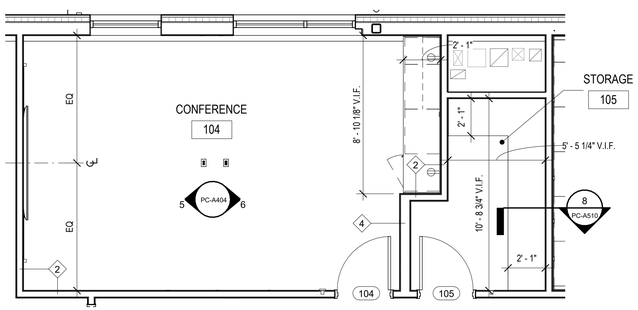

4 PC-A404 CONFERENCE ROOM (104) - ENLARGED PLAN
1/4" = 1'-0"

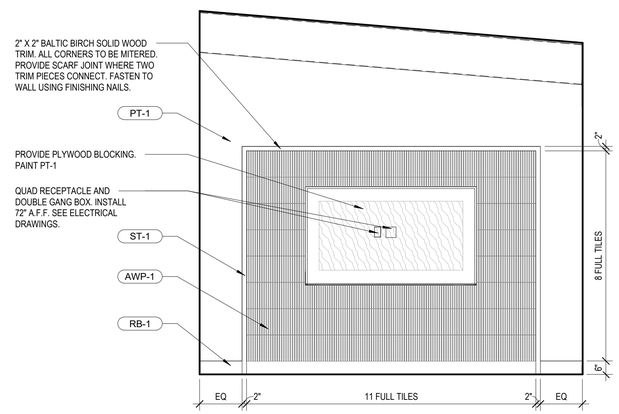

5 PC-A404 CONFERENCE ROOM (104) - WEST ELEVATION
3/8" = 1'-0"

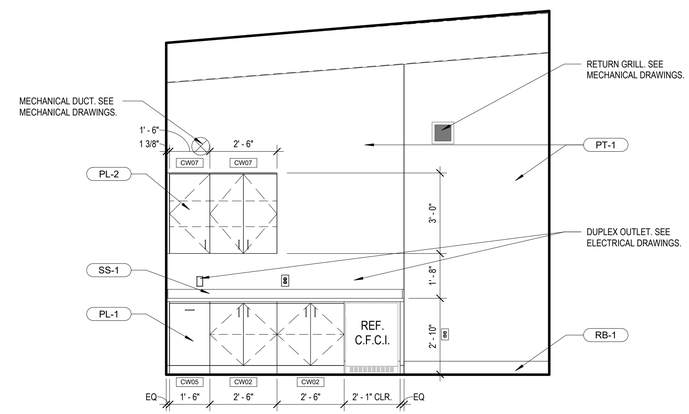

6 PC-A404 CONFERENCE ROOM (104) - EAST ELEVATION
3/8" = 1'-0"

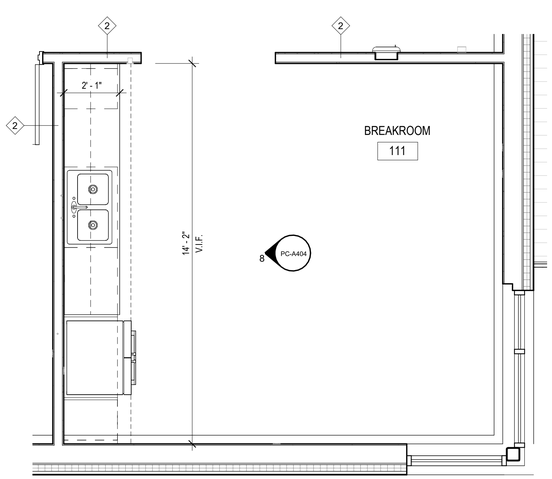

7 PC-A404 ENLARGED PLAN - BREAKROOM
3/8" = 1'-0"

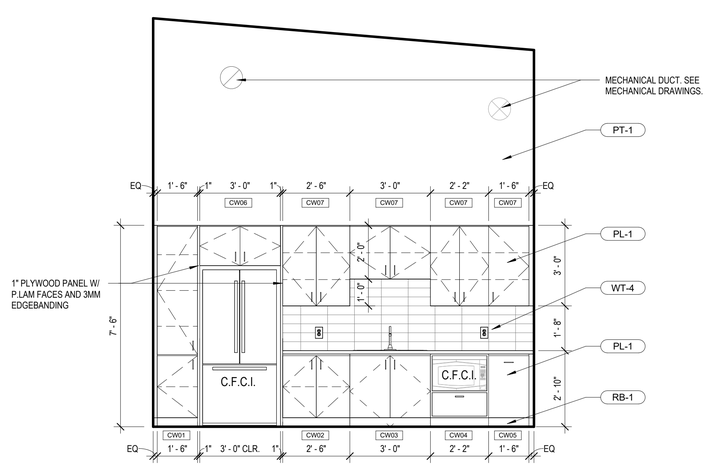

8 PC-A404 BREAKROOM (111) - EAST ELEVATION
3/8" = 1'-0"

Susan Hatchell
Landscape Architecture, PLLC
711 W. North Street, Raleigh, NC 27603
p: 919-838-9600 f: 919-838-9700

Esse Architects
630 PERSHING ROAD | RALEIGH, NORTH CAROLINA 27608

INTERIOR ELEVATIONS

LAKE MYRA COUNTY PARK
Wake County, NC

REVISIONS

Esse Architects P.A. Registered Architectural Corporation 52498 North Carolina Raleigh, NC

MIRANDA DONNER POTTHOFF Registered Architect 11663 North Carolina Raleigh, NC 7/27/2026

Date: 07/27/26

PC-A404

Docusign Envelope ID: 8BDE9837-570C-8E6A-8205-A6B2A1B21988

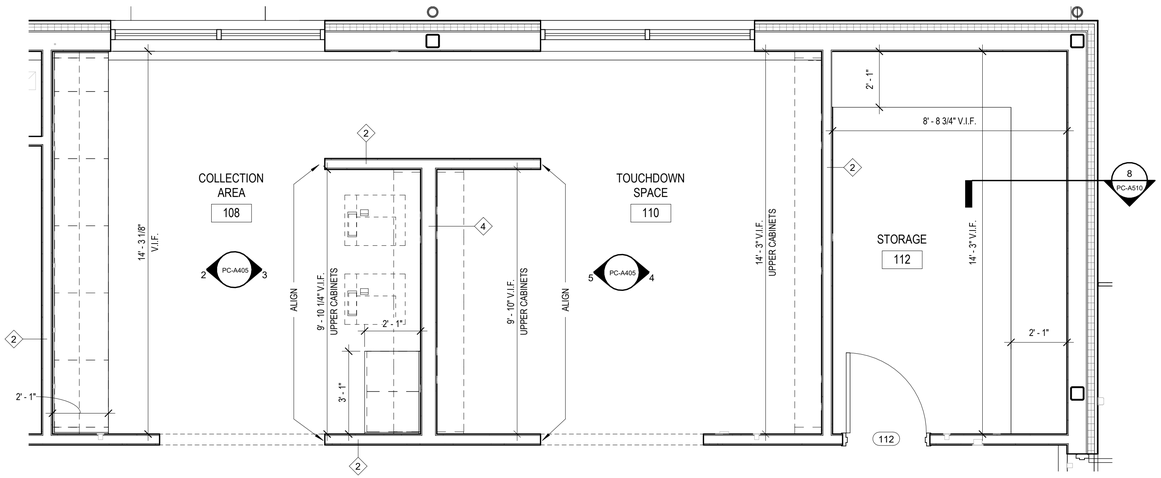

1 PC-A405 COLLECTION AREA (108) & TOUCHDOWN SPACE (110) - ENLARGED PLAN
3/8" = 1'-0"

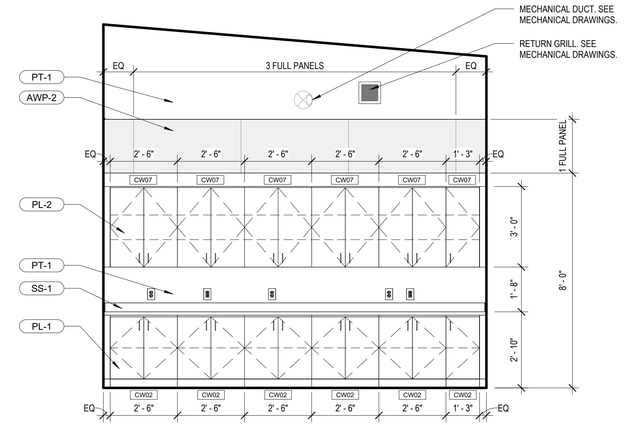

2 PC-A405 ELEVATION - COLLECTION AREA 1
3/8" = 1'-0"

SYMBOL LEGEND

X-X	FINISH TAG
CWXX	CASEWORK TAG
#	PARTITION TAG

GENERAL CASEWORK NOTES

1. CASEWORK DIMENSIONS SHALL BE FIELD VERIFIED PRIOR TO UNIT FABRICATION AND INSTALLATION.
2. COUNTERTOPS, UNLESS OTHERWISE NOTED, SHALL HAVE A 4" HIGH BACKSPLASH AND SIDE SPLASH SCRIBED TO CONFORM TO THE SURFACE OF ABUTTING WALLS AT BACKS AND ENDS. COUNTERTOPS AND BACKSPLASH SHALL BE CAULKED TO THE WALL.
3. GC SHALL COORDINATE WITH CASEWORK FABRICATOR AND APPROPRIATE SUBCONTRACTORS FOR INSTALLATION OF PLUMBING FIXTURES AND EQUIPMENT WITH ASSOCIATED PIPING AND FITTINGS, AND FOR INSTALLATION OF ELECTRICAL RECEPTACLES, LIGHT FIXTURES, ETC. WITHIN THE CASEWORK.
4. PROVIDE WALL MOUNTED ANGLE SUPPORTS (WHEN EXPOSED FINISH TO MATCH THE COLOR OF ADJACENT WALL) WHERE NECESSARY FOR SUPPORT OF COUNTERTOPS ABOVE KNEE SPACES.
5. PROVIDE SCHEDULED BASE ALONG BOTTOM OF EXPOSED FRONTS, BACKS, SIDES, AND ENDS OF ALL AFFIXED CASEWORK, VERTICAL SUPPORTS, KNEE SPACES, ETC. (U.N.O.)
6. PROVIDE CONCEALED BLOCKING FOR MOUNTING OF ALL SHELVING, HOOKS, DISPENSERS, ETC.
7. ALL OPENINGS IN COUNTERS SHALL BE CUT IN, NOT SEAMED.

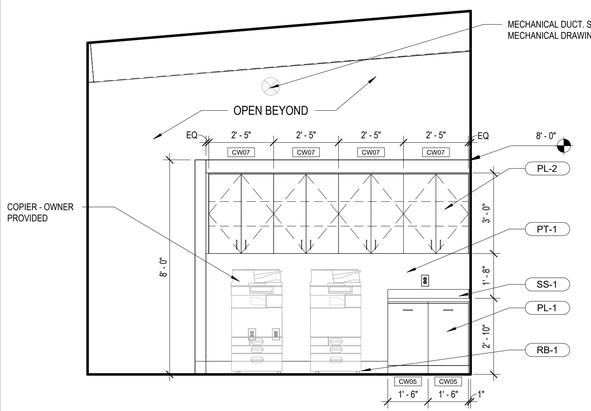

3 PC-A405 COLLECTION AREA (108) - EAST ELEVATION
3/8" = 1'-0"

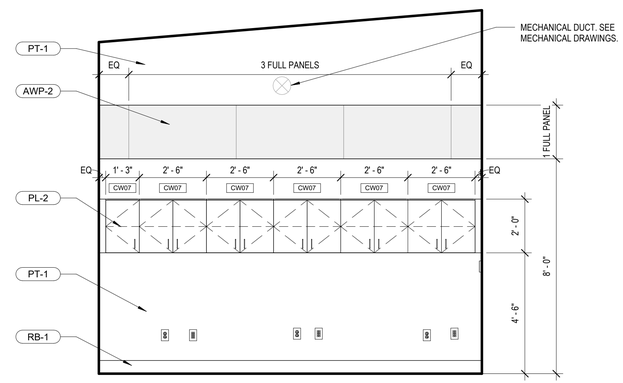

4 PC-A405 TOUCHDOWN SPACE (110) - EAST ELEVATION
3/8" = 1'-0"

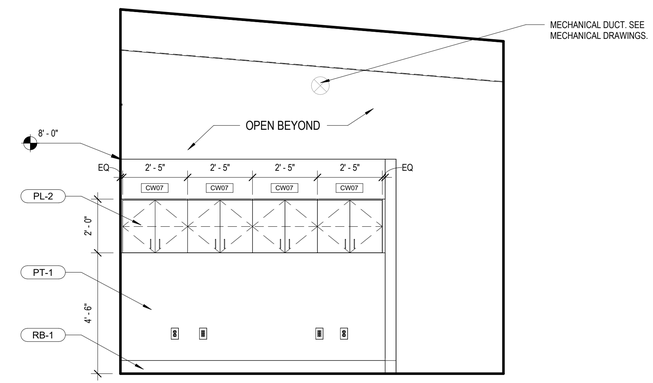

5 PC-A405 TOUCHDOWN SPACE (110) - WEST ELEVATION
3/8" = 1'-0"

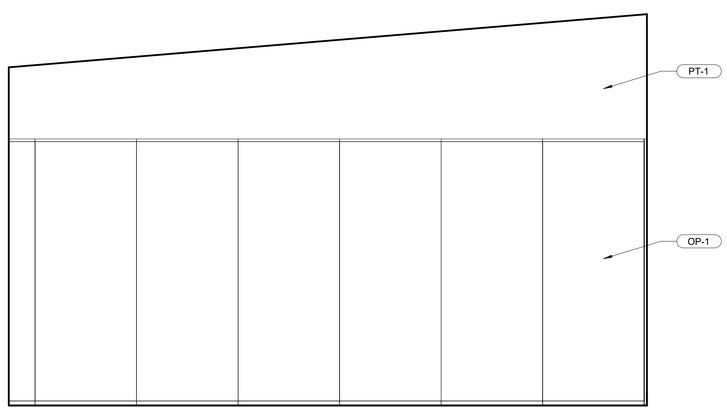

6 PC-A405 INTERIOR ELEVATION @ OPERABLE PARTITION
3/8" = 1'-0"

Susan Hatchell
Landscape Architecture, PLLC
711 W. North Street, Raleigh, NC 27603
p: 919-838-9600 f: 919-838-9700

Esse Architects
832 PERSHING ROAD | RALEIGH, NORTH CAROLINA 27608

INTERIOR ELEVATIONS

LAKE MYRA COUNTY PARK
Wake County, NC

REVISIONS

Esse Architects P.A. Registered Architectural Corporation 52498 North Carolina Raleigh, NC

MIRANDA DOWNER POTTHOFF Registered Architect 11663 North Carolina Raleigh, NC 7/27/2026

Date: 07/27/26

PC-A405

Docusign Envelope ID: 8BDE9837-570C-8E6A-8205-A6B2A1B21988

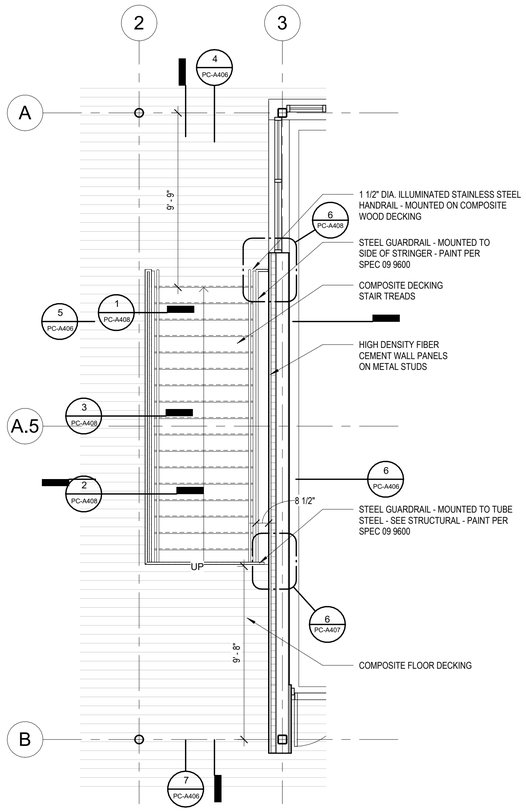

1 PC-A406 STAIR 1 - ENLARGED PLAN - UPPER LEVEL
1/4" = 1'-0"

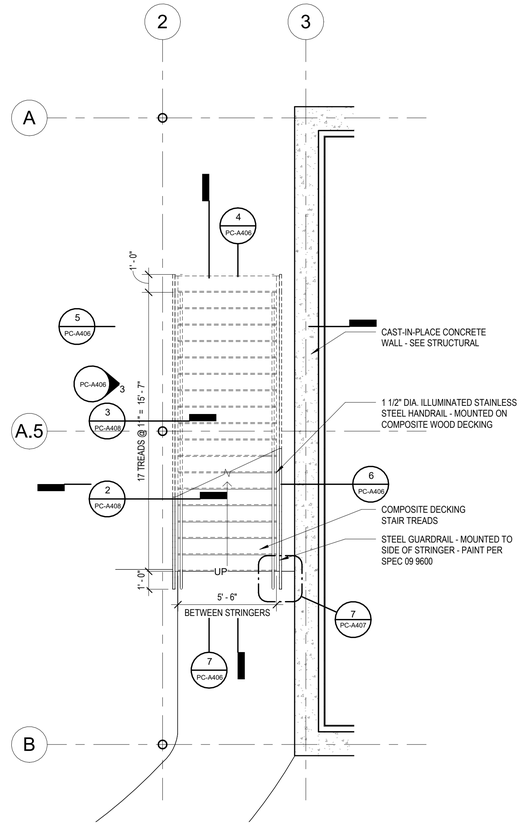

2 PC-A406 STAIR 1 - ENLARGED PLAN - LOWER LEVEL
1/4" = 1'-0"

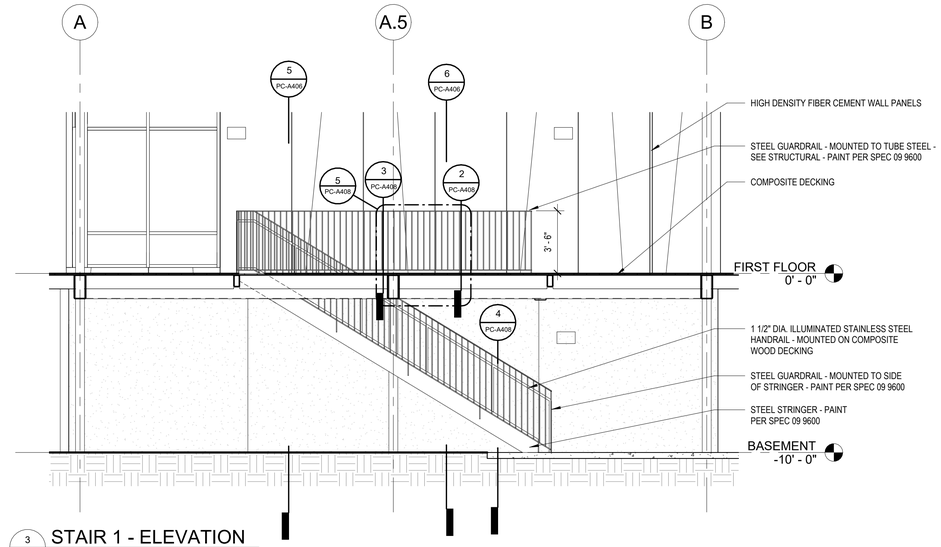

3 PC-A406 STAIR 1 - ELEVATION
1/4" = 1'-0"

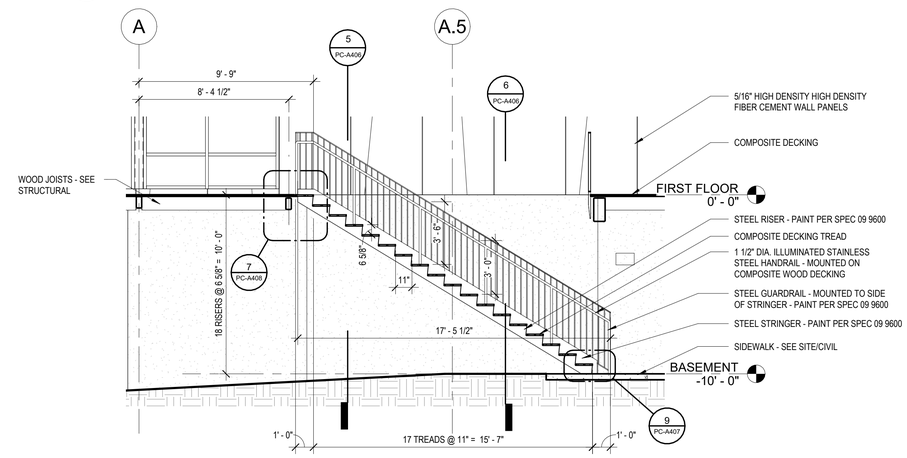

4 PC-A406 STAIR 1 - SECTION 1
1/4" = 1'-0"

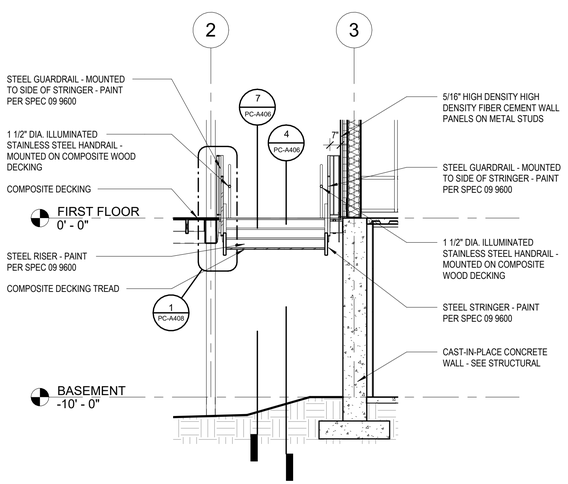

5 PC-A406 STAIR 1 - SECTION 3
1/4" = 1'-0"

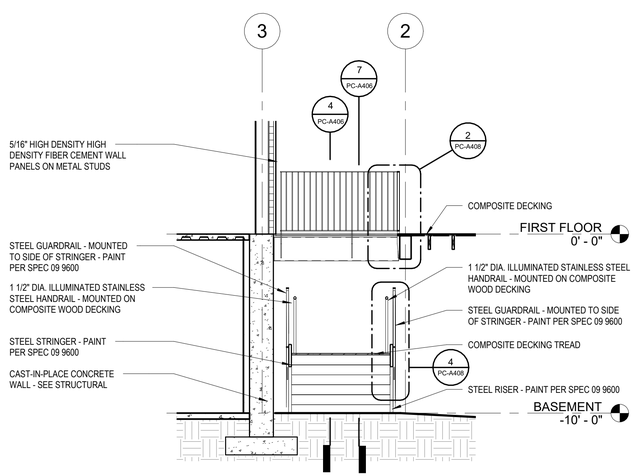

6 PC-A406 STAIR 1 - SECTION 4
1/4" = 1'-0"

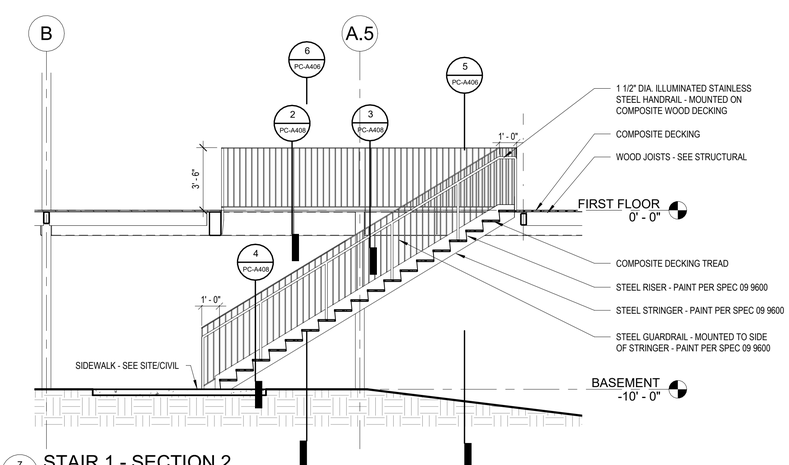

7 PC-A406 STAIR 1 - SECTION 2
1/4" = 1'-0"

Susan Hatchell
Landscape Architecture, PLLC
711 W. North Street, Raleigh, NC 27603
p: 919-838-9600 f: 919-838-9700

Esse Architects
632 PERSHING ROAD | RALEIGH, NORTH CAROLINA 27608

ENLARGED STAIR PLANS AND DETAILS

LAKE MYRA COUNTY PARK
Wake County, NC

REVISIONS

Esse Architects P.A. Registered Architectural Corporation 52498 North Carolina Raleigh, NC

MIRANDA DOWNER PATTERSON Registered Architect 11663 North Carolina Raleigh, NC 7/27/2026

Signed by: Miranda Patterson
1EC94258B0524B5...

Date: 07/27/26

PC-A406

Docusign Envelope ID: 8BDE9837-570C-8E6A-8205-A6B2A1B21988

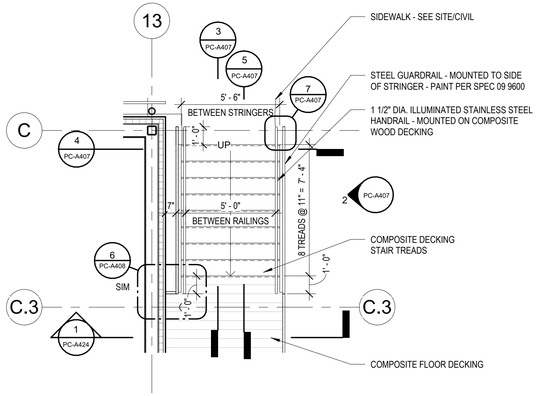

1 PC-A407 STAIR 3 - ENLARGED PLAN
1/4" = 1'-0"

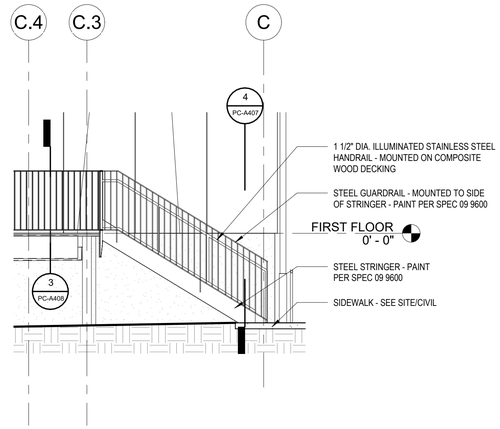

2 PC-A407 STAIR 3 - ELEVATION
1/4" = 1'-0"

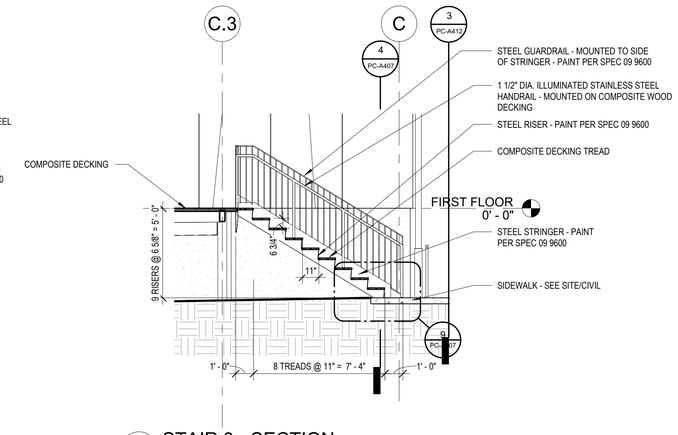

3 PC-A407 STAIR 3 - SECTION
1/4" = 1'-0"

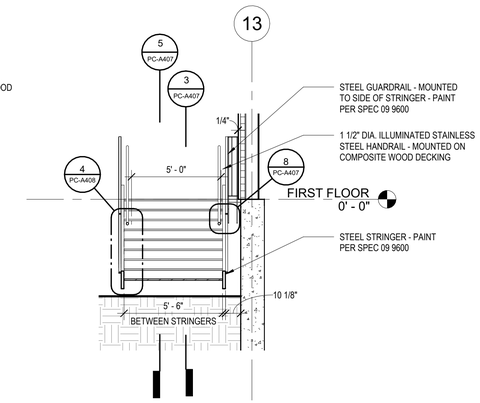

4 PC-A407 STAIR 3 - SECTION 2
1/4" = 1'-0"

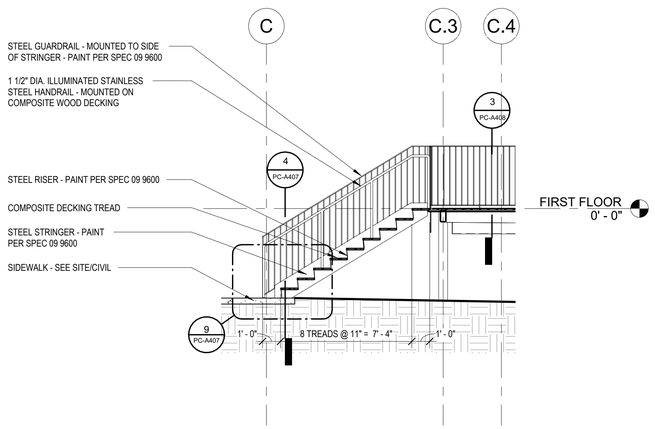

5 PC-A407 STAIR 3 - SECTION 3
1/4" = 1'-0"

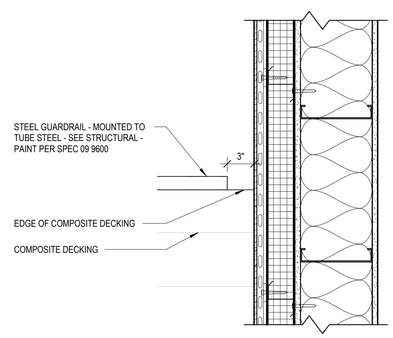

6 PC-A407 TYP. GUARDRAIL TO WALL DETAIL
1 1/2" = 1'-0"

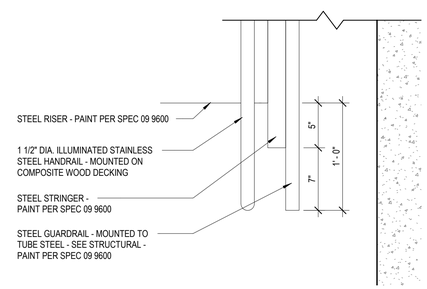

7 PC-A407 TYP. BASE OF STAIR TERMINATION
1 1/2" = 1'-0"

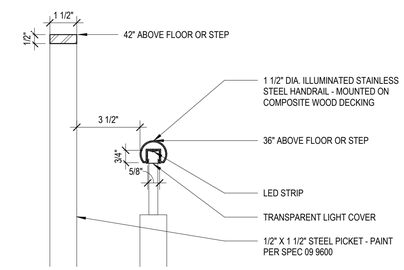

8 PC-A407 TYP. ILLUMINATED HANDRAIL DETAIL
3" = 1'-0"

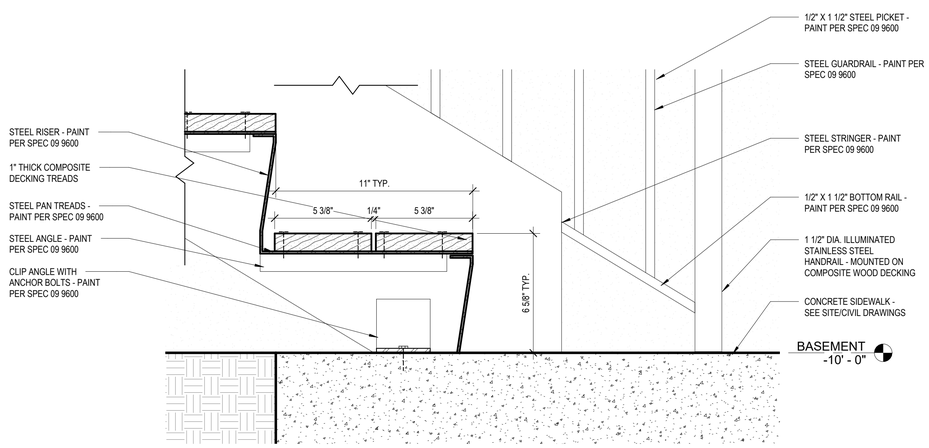

9 PC-A407 TYP. EXTERIOR TREAD DETAIL
3" = 1'-0"

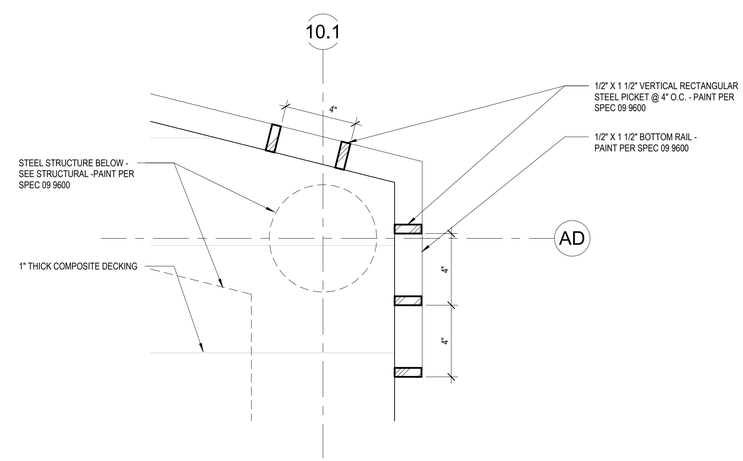

10 PC-A407 ANGLED CORNER DETAIL
3" = 1'-0"

Susan Hatchell
Landscape Architecture, PLLC
711 W. North Street, Raleigh, NC 27603
p: 919-838-9600 f: 919-838-9700

Esse Architects
632 PERSHING ROAD | RALEIGH, NORTH CAROLINA 27608

ENLARGED STAIR PLANS AND DETAILS

LAKE MYRA COUNTY PARK
Wake County, NC

REVISIONS

Esse Architects P.A. Registered Architectural Corporation 52498 North Carolina Raleigh, NC

MIRANDA DOWNER POTHOFF Registered Architect 11663 North Carolina Raleigh, NC
Signed by: Miranda Pothoff
1EC94588C628488...
7/27/2026

Date: 07/27/26

PC-A407

Docusign Envelope ID: 8BDE9837-570C-8E6A-8205-A6B2A1B21988

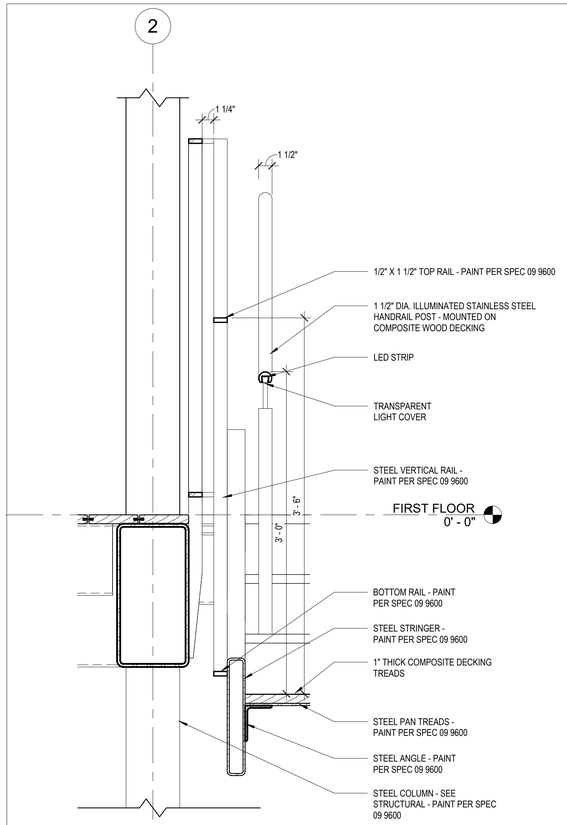

1 PC-A408 STAIR 1 - DETAIL 3
1 1/2" = 1'-0"

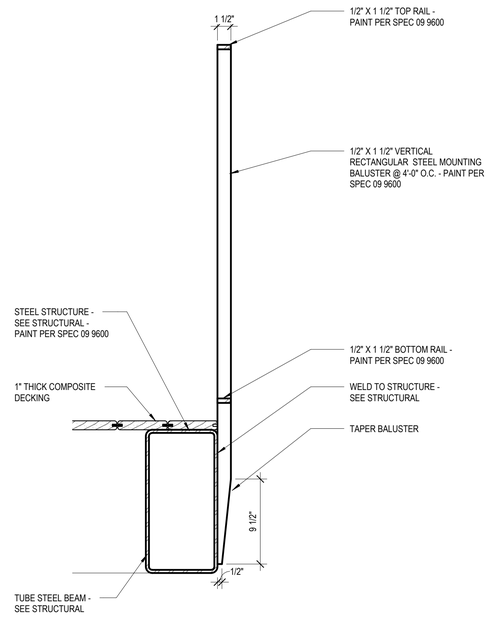

2 PC-A408 TYP. GUARDRAIL BALUSTER DETAIL
1 1/2" = 1'-0"

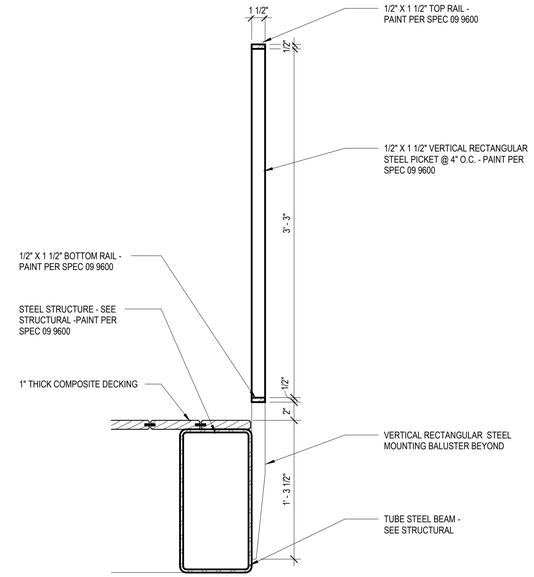

3 PC-A408 TYP. GUARDRAIL RAIL DETAIL
1 1/2" = 1'-0"

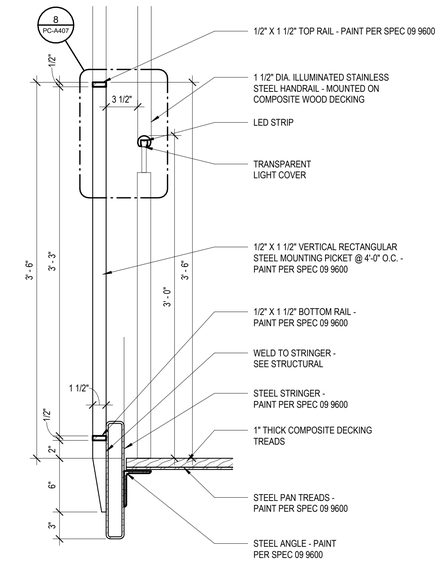

4 PC-A408 TYP. STAIR GUARDRAIL DETAIL
1 1/2" = 1'-0"

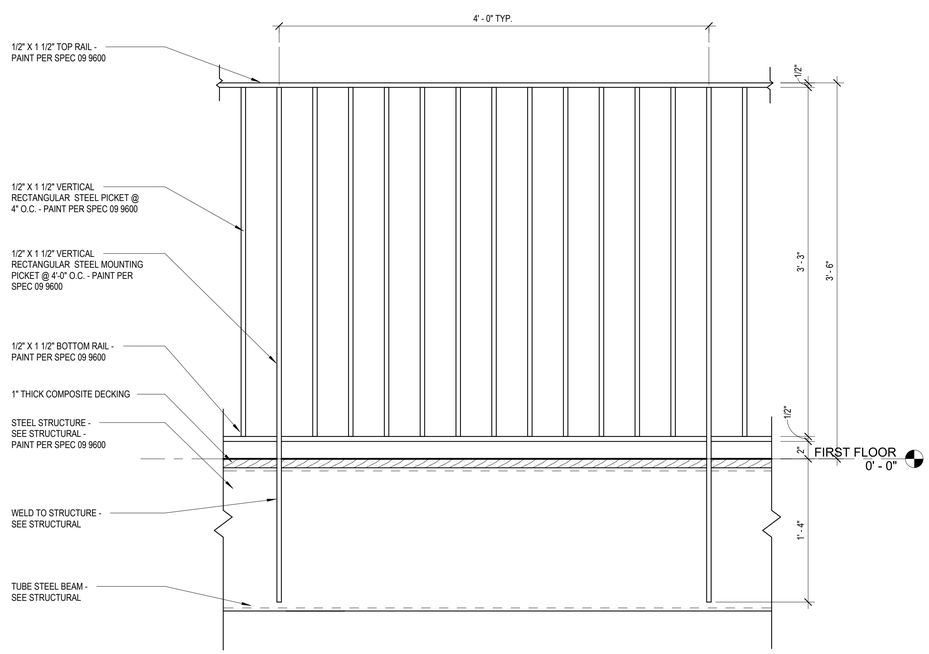

5 PC-A408 TYPICAL GUARDRAIL ELEVATION
1 1/2" = 1'-0"

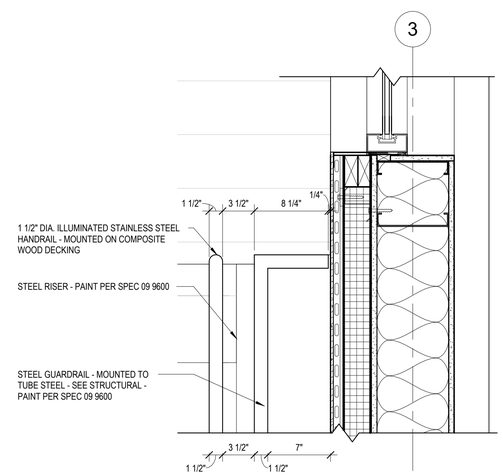

6 PC-A408 STAIR 1 - DETAIL 1
1 1/2" = 1'-0"

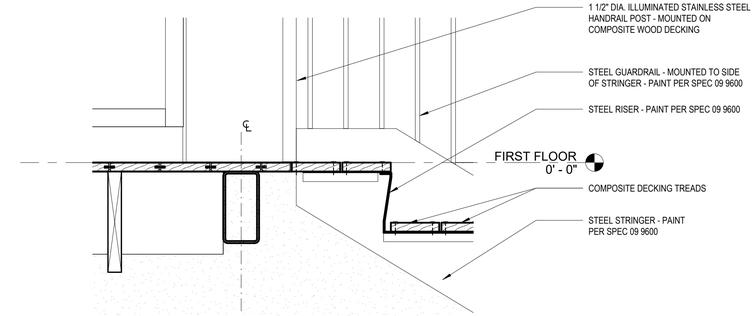

7 PC-A408 STAIR 1 - DETAIL 2
1 1/2" = 1'-0"

Susan Hatchell
Landscape Architecture, PLLC
711 W. North Street, Raleigh, NC 27603
p: 919-838-9600 f: 919-838-9700

Esse Architects
EST. PERSONAL & SOCIAL | RALEIGH, NORTH CAROLINA | 2008

ENLARGED STAIR PLANS AND DETAILS

LAKE MYRA COUNTY PARK
Wake County, NC

REVISIONS

Esse Architects P.A. Registered Architectural Corporation 52498 North Carolina Raleigh, NC

MIRANDA DONNER POTTHOFF Registered Architect 11663 North Carolina Raleigh, NC 7/27/2026

Date: 07/27/26

PC-A408

Docusign Envelope ID: 8BDE9837-570C-8E6A-8205-A6B2A1B21988

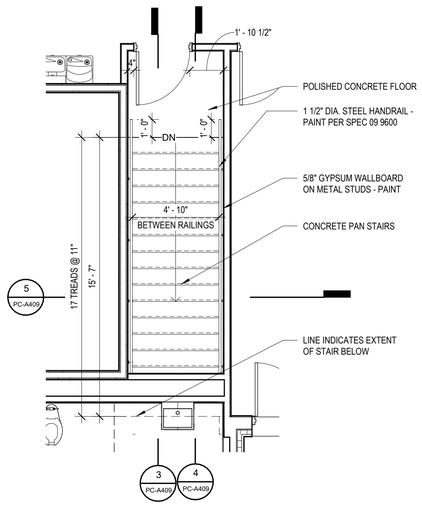

1 PC-A409 STAIR 4 - ENLARGED PLAN - UPPER LEVEL
1/4" = 1'-0"

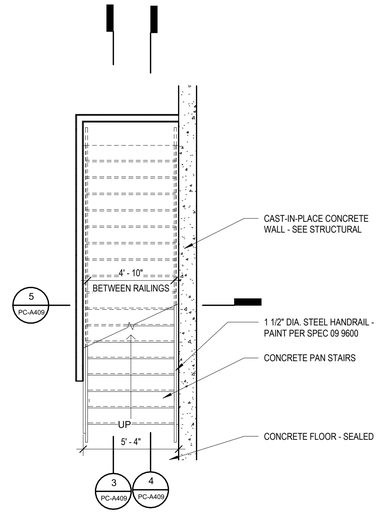

2 PC-A409 STAIR 4 - ENLARGED PLAN - LOWER LEVEL
1/4" = 1'-0"

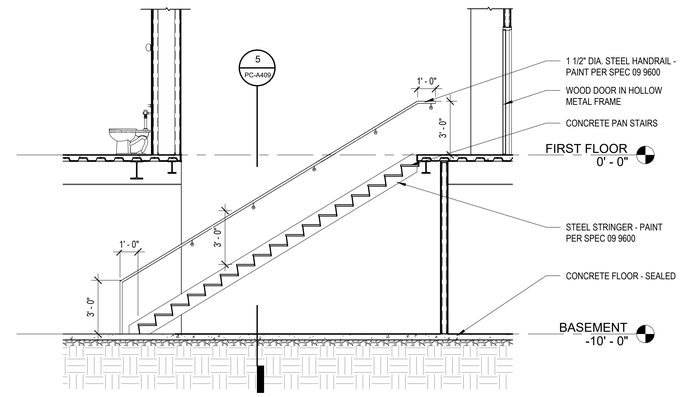

3 PC-A409 STAIR 4 - SECTION 1
1/4" = 1'-0"

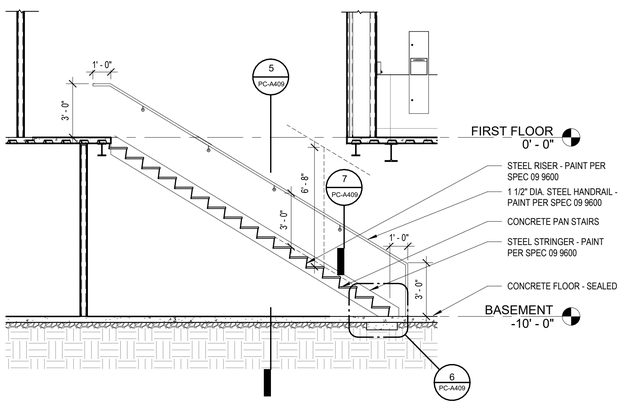

4 PC-A409 STAIR 4 - SECTION 2
1/4" = 1'-0"

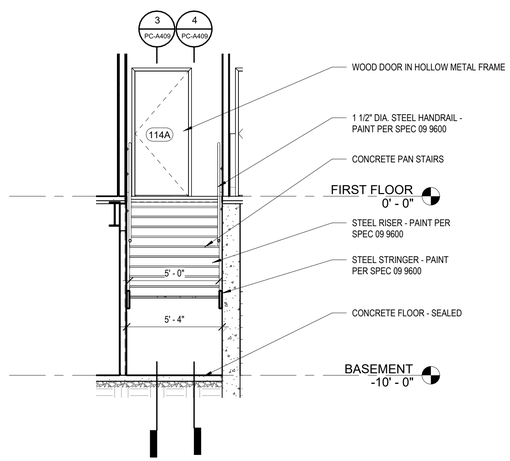

5 PC-A409 STAIR 4 - SECTION 3
1/4" = 1'-0"

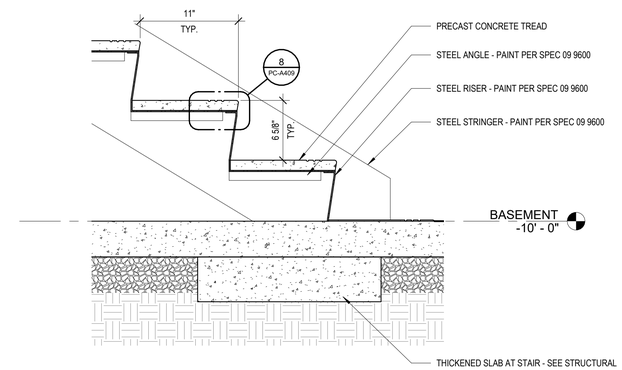

6 PC-A409 STAIR 4 - TREAD DETAIL
1 1/2" = 1'-0"

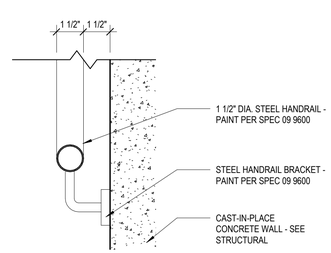

7 PC-A409 STAIR 4 - HANDRAIL DETAIL
3" = 1'-0"

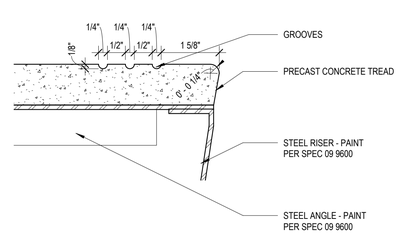

8 PC-A409 STAIR TREAD ENLARGED DETAIL
6" = 1'-0"

Susan Hatchell
Landscape Architecture, PLLC
711 W. North Street, Raleigh, NC 27603
p: 919-838-9600 f: 919-838-9700

Esse Architects
830 PERSHING ROAD | RALEIGH, NORTH CAROLINA 27608

ENLARGED STAIR PLANS AND DETAILS

LAKE MYRA COUNTY PARK
Wake County, NC

REVISIONS

Esse Architects P.A. Registered Architectural Corporation 52498 North Carolina Raleigh, NC

MIRANDA DONNER POTTHOFF Registered Architect 11663 Licensed to practice in North Carolina Raleigh, NC 7/27/2026

Date: 07/27/26

PC-A409

Docusign Envelope ID: 8BDE9837-570C-8E6A-8205-A6B2A1B21988

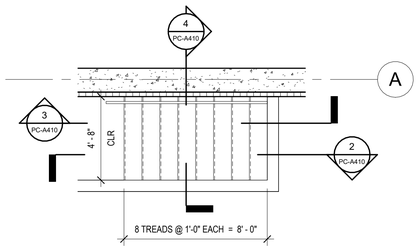

1 PC-A410 STAIR 5 - ENLARGED PLAN
1/4" = 1'-0"

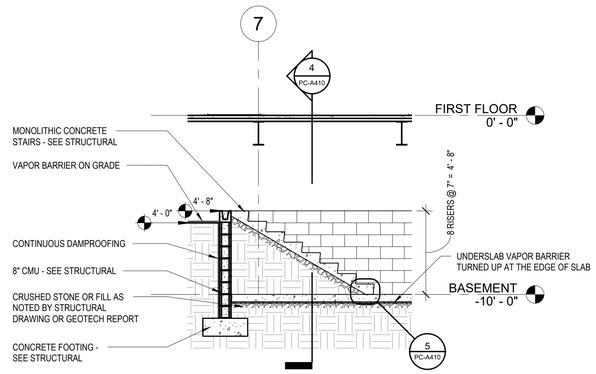

2 PC-A410 STAIR 5 - SECTION
1/4" = 1'-0"

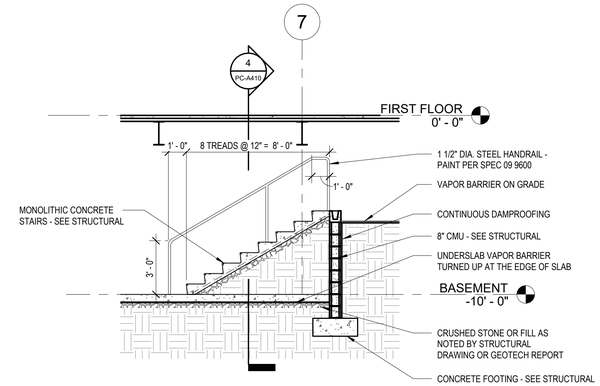

3 PC-A410 STAIR 5 - SECTION 2
1/4" = 1'-0"

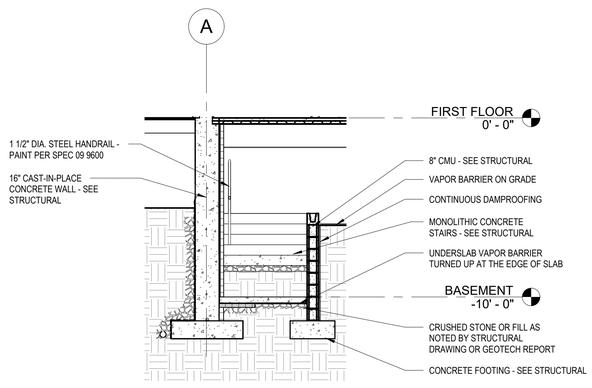

4 PC-A410 STAIR 5 - SECTION 3
1/4" = 1'-0"

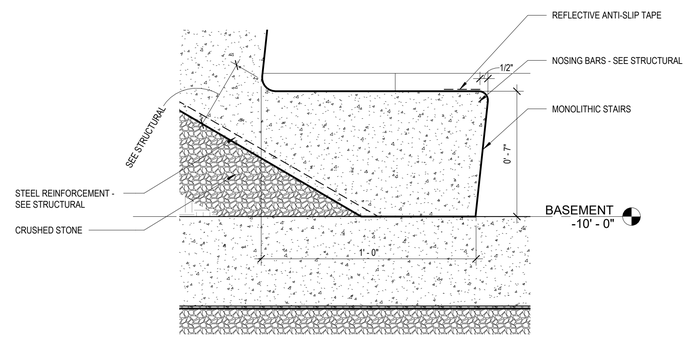

5 PC-A410 STAIR 5 - TREAD DETAIL
3" = 1'-0"

Susan Hatchell
Landscape Architecture, PLLC
711 W. North Street, Raleigh, NC 27603
p: 919-838-9600 f: 919-838-9700

Esse Architects
632 PERSHING ROAD | RALEIGH, NORTH CAROLINA 27608

ENLARGED STAIR PLANS AND DETAILS

LAKE MYRA COUNTY PARK
Wake County, NC

REVISIONS

Esse Architects P.A. Registered Architectural Corporation 52498 North Carolina Raleigh, NC

MIRANDA DOWNER POTTHOFF Registered Architect 11663 North Carolina Raleigh, NC
Miranda Potthoff
IEC04A0B0B2B4B9
7/27/2026

Date: 07/27/26

PC-A410

Docusign Envelope ID: 8BDE9837-570C-8E6A-8205-A6B2A1B21988

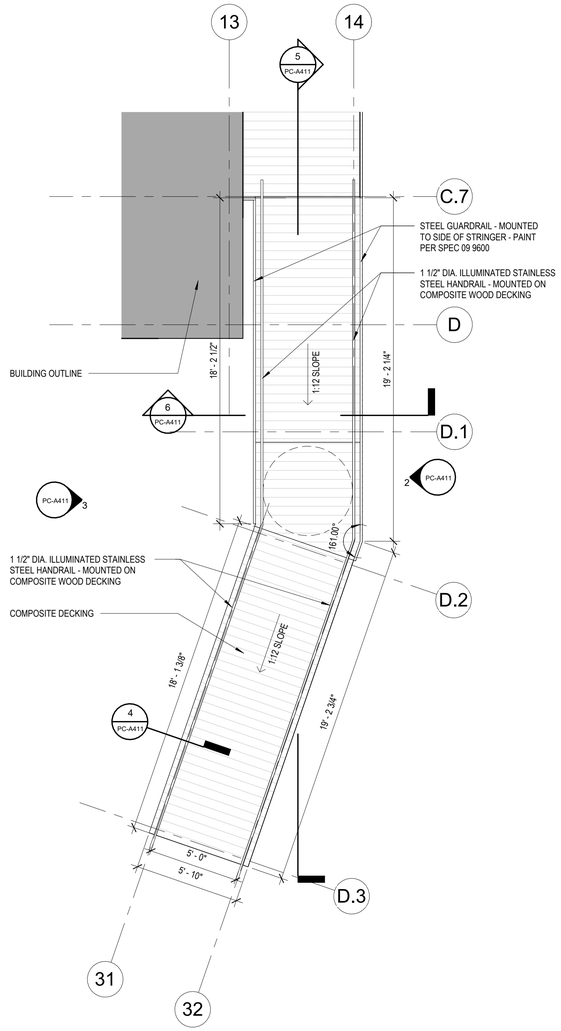

1 PC-A411 ADMIN RAMP - ENLARGED PLAN
1/4" = 1'-0"

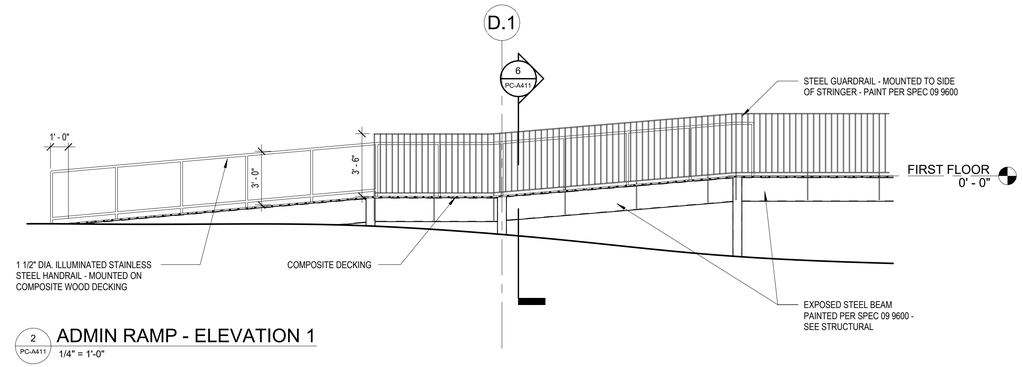

2 PC-A411 ADMIN RAMP - ELEVATION 1
1/4" = 1'-0"

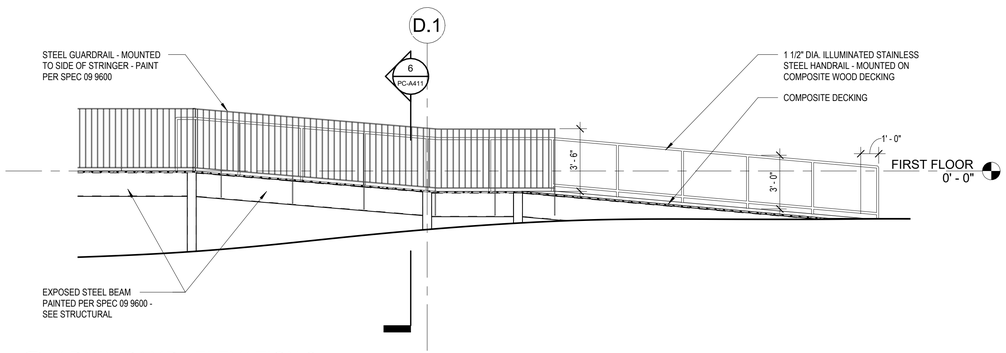

3 PC-A411 ADMIN RAMP - ELEVATION 2
1/4" = 1'-0"

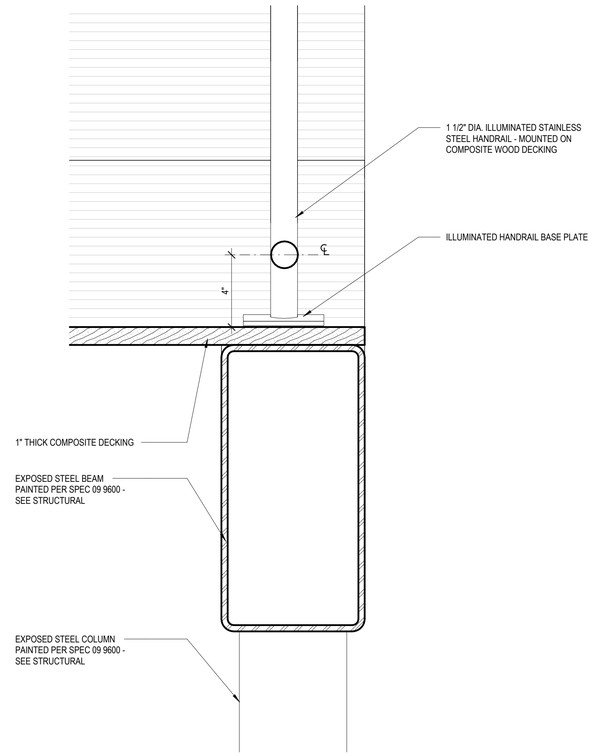

4 PC-A411 RAMP HANDRAIL W/O GUARDRAIL
3" = 1'-0"

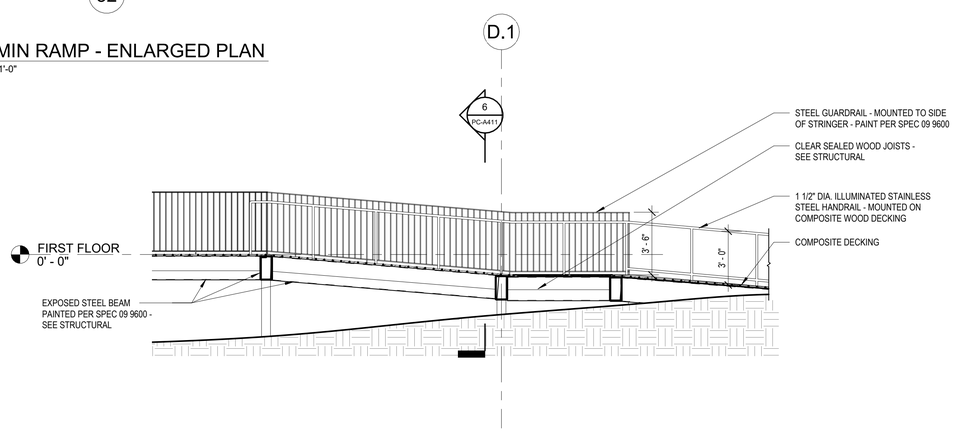

5 PC-A411 ADMIN RAMP SECTION
1/4" = 1'-0"

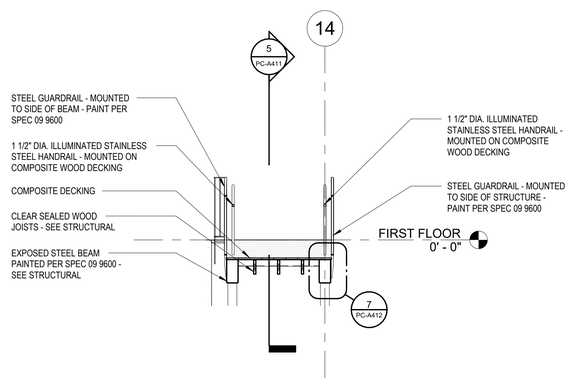

6 PC-A411 ADMIN RAMP SECTION 2
1/4" = 1'-0"

Susan Hatchell
Landscape Architecture, PLLC
711 W. North Street, Raleigh, NC 27603
p: 919-838-9600 f: 919-838-9700

Esse Architects
632 PERSHING ROAD | RALEIGH, NORTH CAROLINA 27608

ENLARGED RAMP PLANS AND DETAILS

LAKE MYRA COUNTY PARK
Wake County, NC

Esse Architects P.A. Registered Architectural Corporation 52498 North Carolina Raleigh, NC

MIRANDA DONNER POTTHOFF Registered Architect 11603 Miranda Potthoff Raleigh, NC 7/27/2026

REVISIONS

Date: 07/27/26

PC-A411

Docusign Envelope ID: 8BDE9837-570C-8E6A-8205-A6B2A1B21988

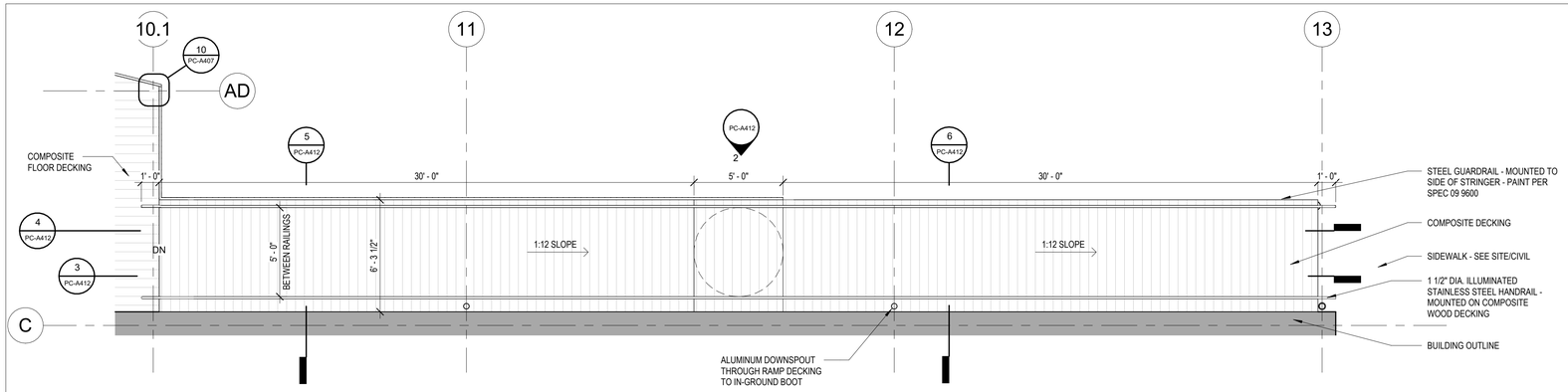

1 PC-A412 BACK RAMP - ENLARGED PLAN
1/4" = 1'-0"

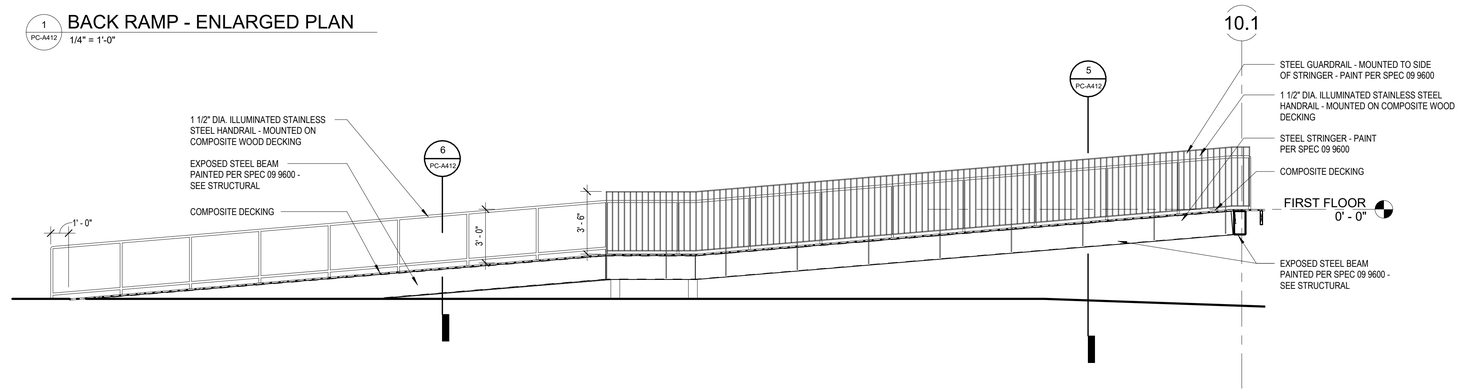

2 PC-A412 BACK RAMP - ELEVATION
1/4" = 1'-0"

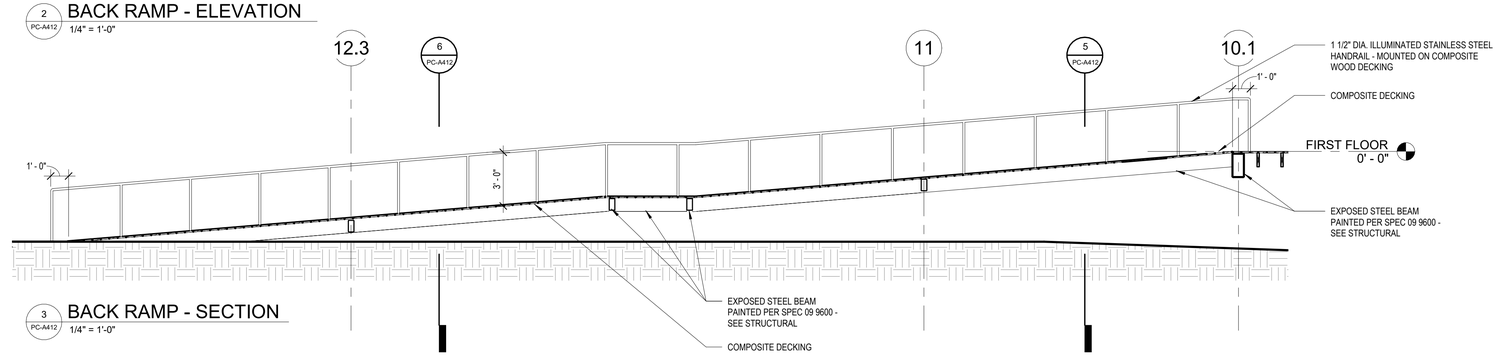

3 PC-A412 BACK RAMP - SECTION
1/4" = 1'-0"

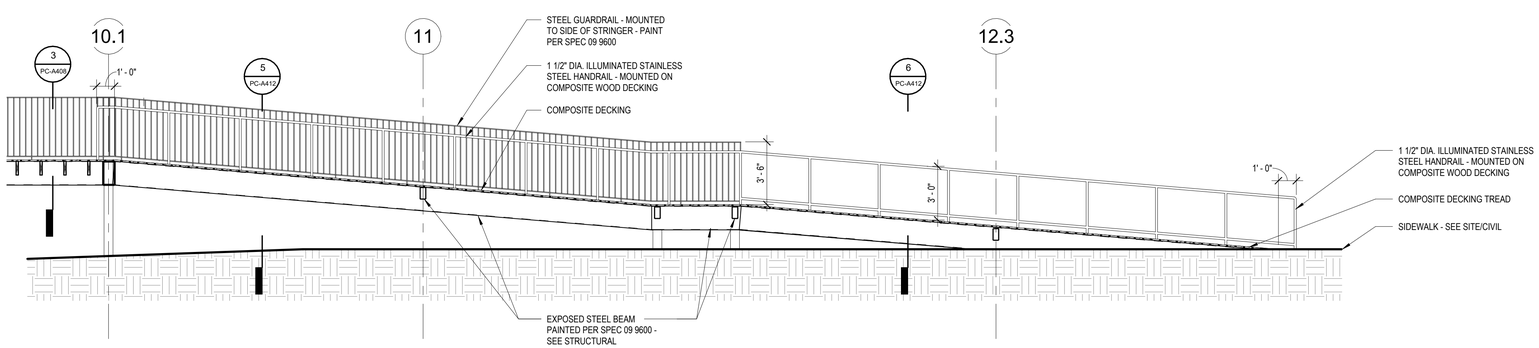

4 PC-A412 BACK RAMP - SECTION 3
1/4" = 1'-0"

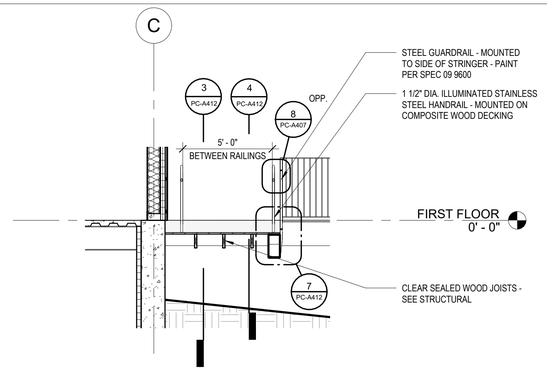

5 PC-A412 BACK RAMP - SECTION 2
1/4" = 1'-0"

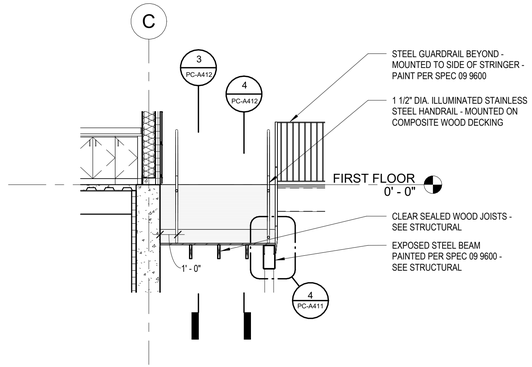

6 PC-A412 BACK RAMP - SECTION 1
1/4" = 1'-0"

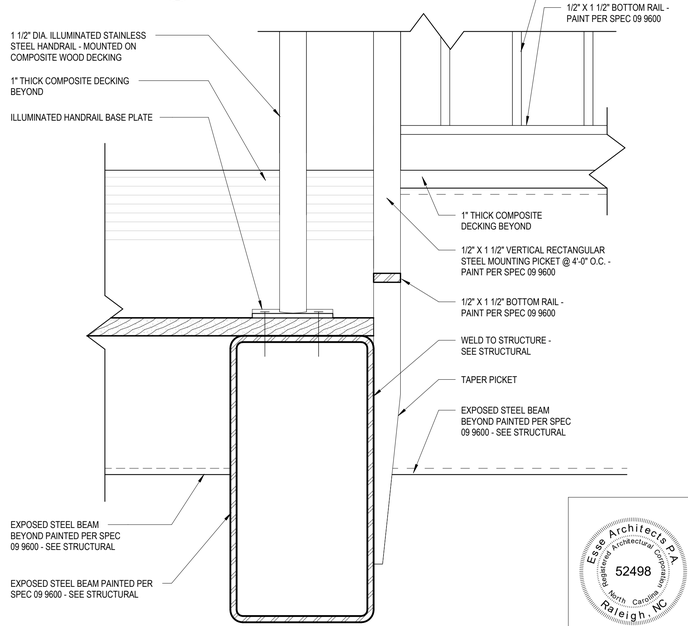

7 PC-A412 RAMP GUARDRAIL TERMINATION
3" = 1'-0"

Susan Hatchell
Landscape Architecture, PLLC
711 W. North Street, Raleigh, NC 27603
p: 919-838-9600 f: 919-838-9700

Esse Architects
630 PERSHING ROAD | RALEIGH, NORTH CAROLINA 27608

ENLARGED RAMP PLANS AND DETAILS

LAKE MYRA COUNTY PARK
Wake County, NC

REVISIONS

Esse Architects P.A. Registered Architectural Corporation 52498 North Carolina Raleigh, NC

MIRANDA DONNER POTTHOFF Registered Architect 11653 North Carolina Raleigh, NC
Miranda Potthoff
1EC345A8B6284B8...
7/27/2026

Date: 07/27/26

PC-A412

Docusign Envelope ID: 8BDE9837-570C-8E6A-8205-A6B2A1B21988

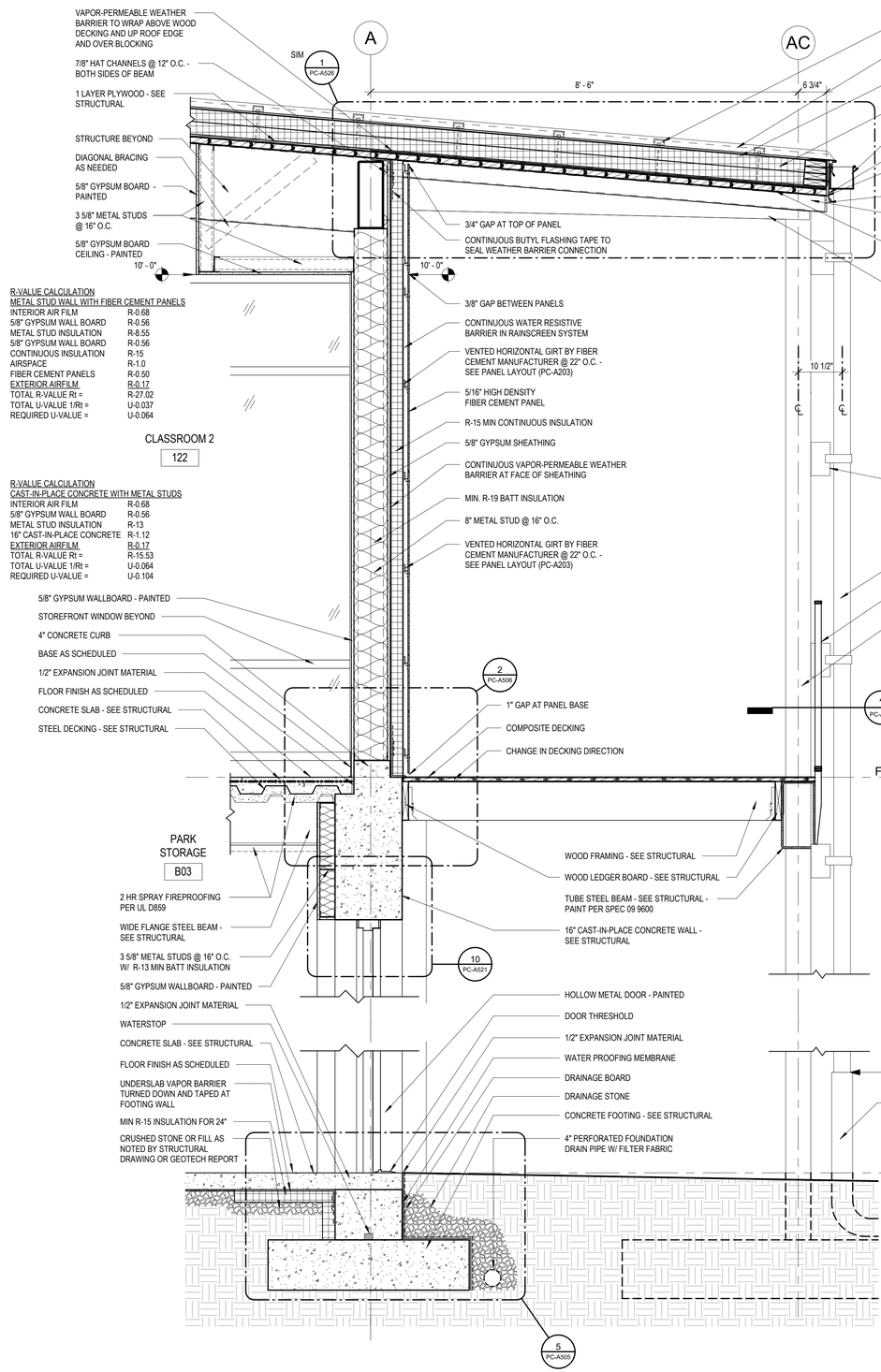

1 PC-A421 TYP. PARK CENTER WALL SECTION
3/4" = 1'-0"

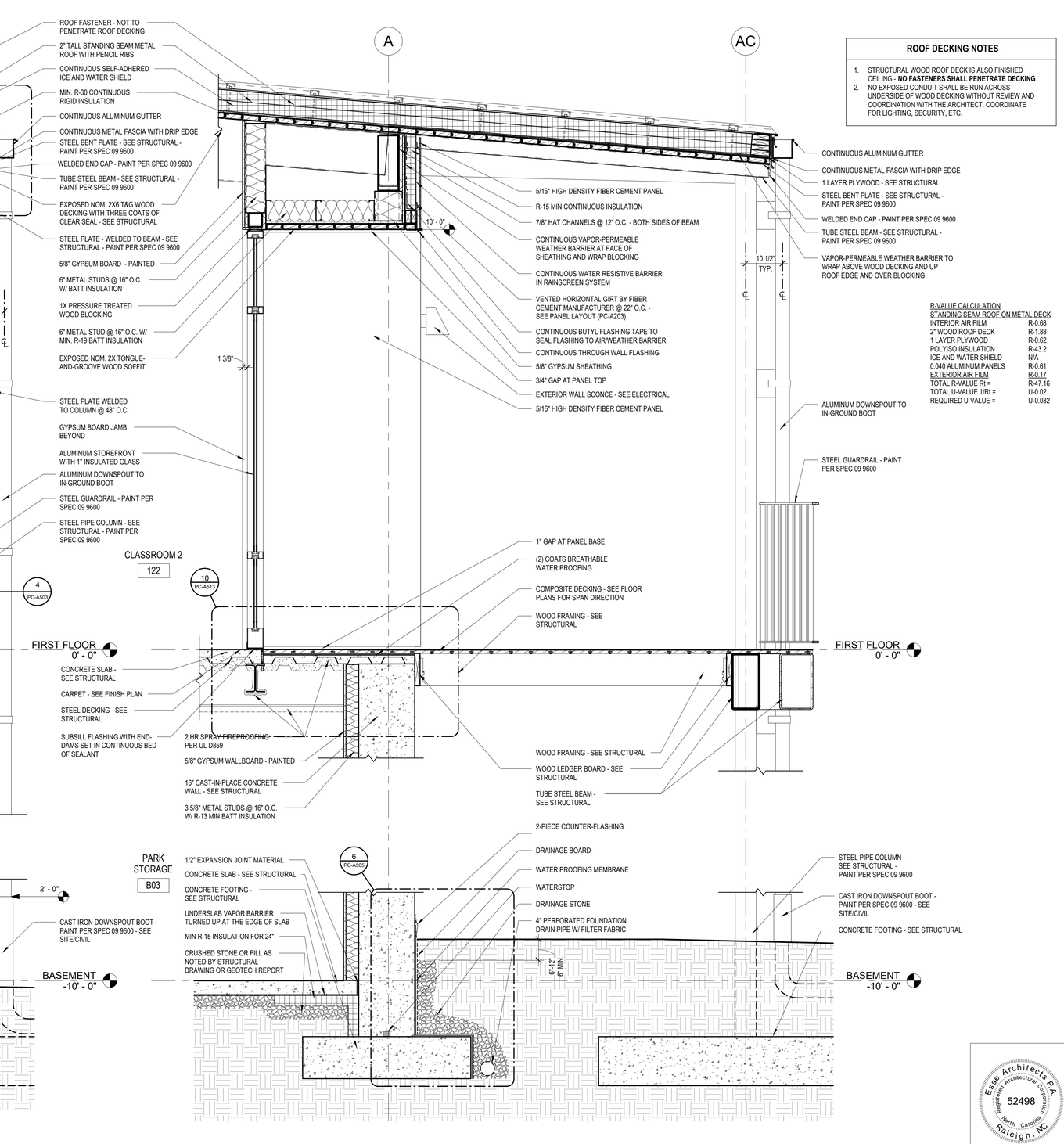

2 PC-A421 WALL SECTION @ CLASSROOM ENTRANCE
3/4" = 1'-0"

ROOF DECKING NOTES

1. STRUCTURAL WOOD ROOF DECK IS ALSO FINISHED CEILING - **NO FASTENERS SHALL PENETRATE DECKING**
2. NO EXPOSED CONDUIT SHALL BE RUN ACROSS UNDERSIDE OF WOOD DECKING WITHOUT REVIEW AND COORDINATION WITH THE ARCHITECT. COORDINATE FOR LIGHTING, SECURITY, ETC.

Susan Hatchell Landscape Architecture, PLLC
711 W. North Street, Raleigh, NC 27603
p: 919-838-9600 f: 919-838-9700

Esse Architects
620 PERSHING ROAD | RALEIGH, NORTH CAROLINA 27608

WALL SECTIONS

LAKE MYRA COUNTY PARK
Wake County, NC

REVISIONS

Esse Architects P.A. Registered Architectural Corporation 52498 North Carolina Raleigh, NC

MIRANDA DONNER POTTHOFF Registered Architect 11863 Miranda Potthoff NORTH CAROLINA Raleigh, NC 7/27/2026

Date: 07/27/26

PC-A421

Docusign Envelope ID: 8BDE9837-570C-8E6A-8205-A6B2A1B21988

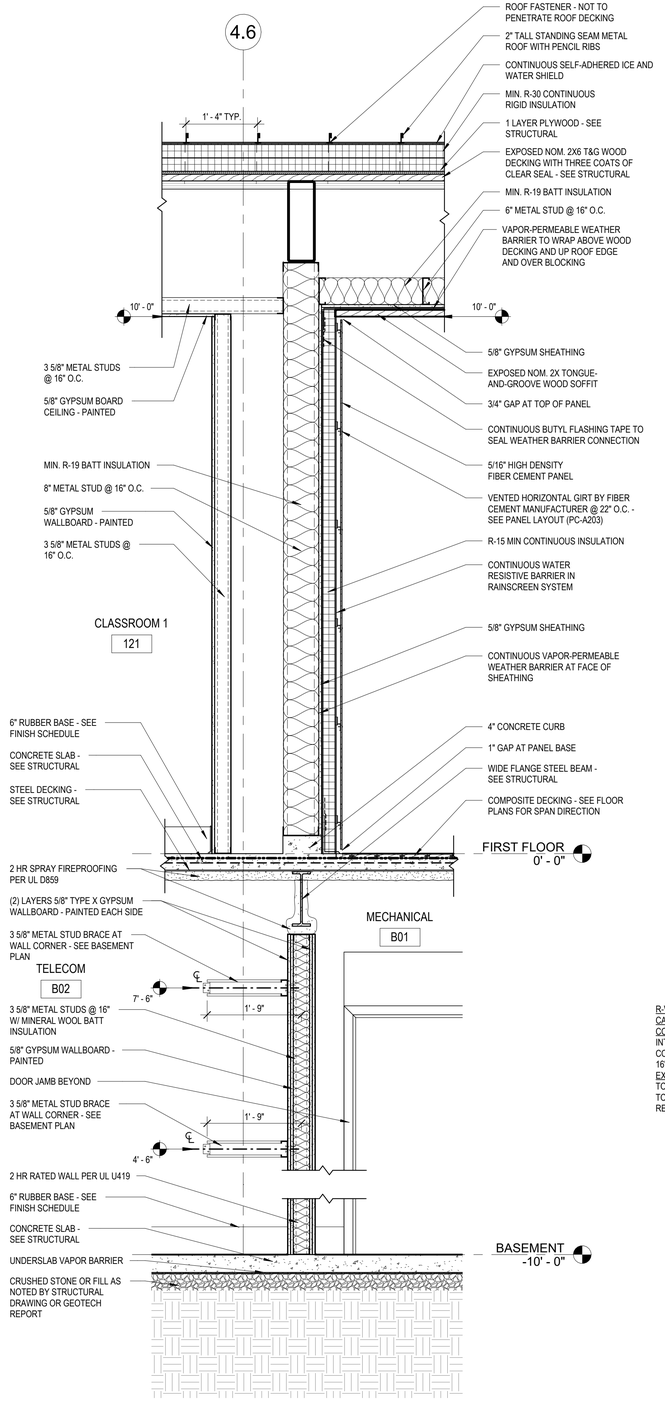

1 PC-A422 WALL SECTION @ CLASSROOM ENTRANCE - SIDE
3/4" = 1'-0"

R-VALUE CALCULATION
CAST-IN-PLACE CONCRETE WITH CONTINUOUS INSULATION

INTERIOR AIR FILM	R-0.68
CONTINUOUS INSULATION	R-15
16" CAST-IN-PLACE CONCRETE	R-1.12
EXTERIOR AIRFILM	R-0.17
TOTAL R-VALUE Ri =	R-11.97
TOTAL U-VALUE 1/Rt =	U-0.08
REQUIRED U-VALUE =	U-0.104

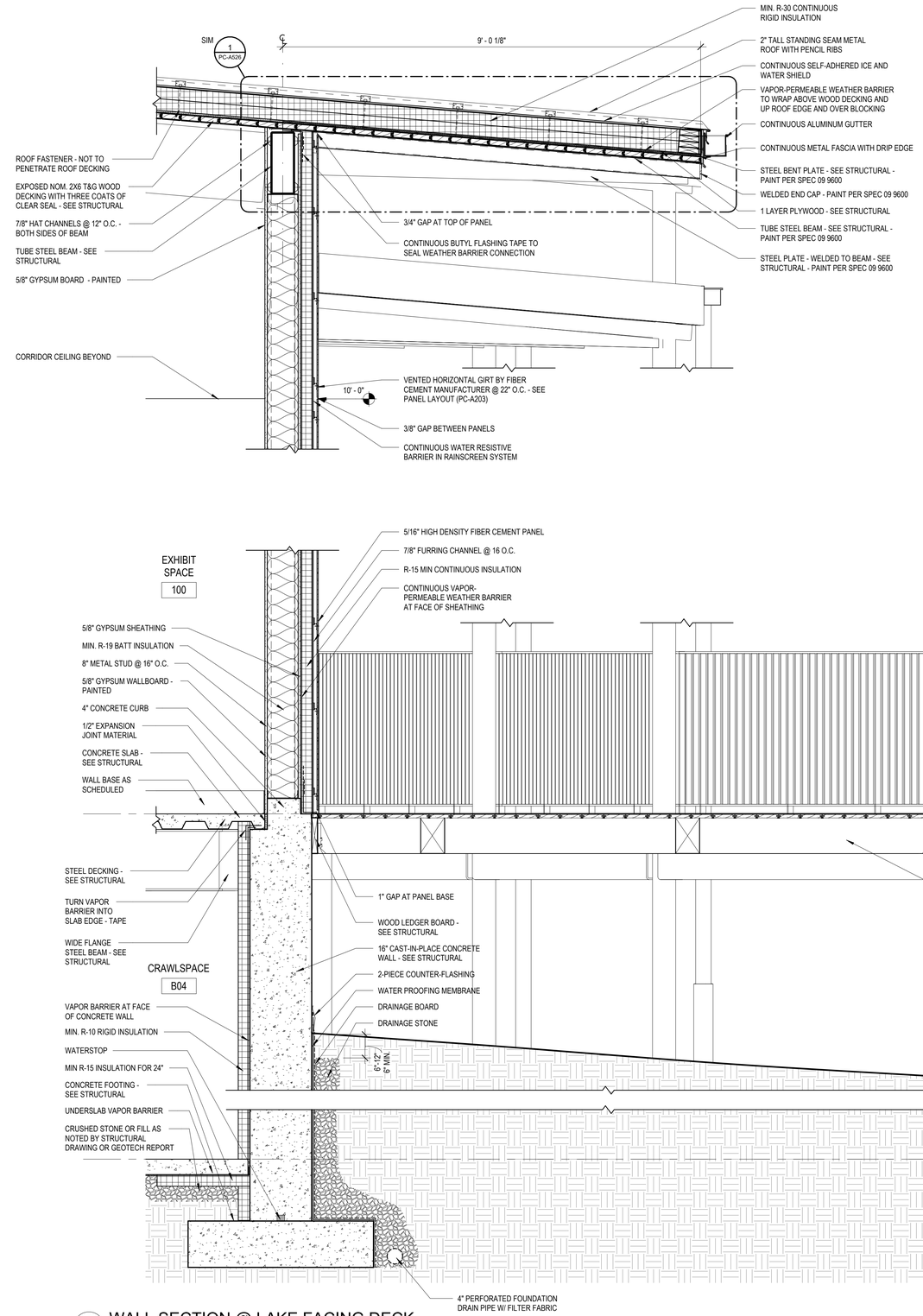

2 PC-A422 WALL SECTION @ LAKE FACING DECK
3/4" = 1'-0"

ROOF DECKING NOTES

1. STRUCTURAL WOOD ROOF DECK IS ALSO FINISHED CEILING - **NO FASTENERS SHALL PENETRATE DECKING**
2. NO EXPOSED CONDUIT SHALL BE RUN ACROSS UNDERSIDE OF WOOD DECKING WITHOUT REVIEW AND COORDINATION WITH THE ARCHITECT. COORDINATE FOR LIGHTING, SECURITY, ETC.

Susan Hatchell
Landscape Architecture, PLLC
711 W. North Street, Raleigh, NC 27603
p: 919-838-9600 f: 919-838-9700

Esse Architects
632 PERSHING ROAD | RALEIGH, NORTH CAROLINA 27608

WALL SECTIONS

LAKE MYRA COUNTY PARK
Wake County, NC

REVISIONS

Esse Architects P.A. Registered Architectural Corporation 52498 North Carolina Raleigh, NC

MIRANDA DOWNER POTTHOFF Registered Architect 11863 North Carolina Raleigh, NC 7/27/2026

Date: 07/27/26

PC-A422

Docusign Envelope ID: 8BDE9837-570C-8E6A-8205-A6B2A1B21988

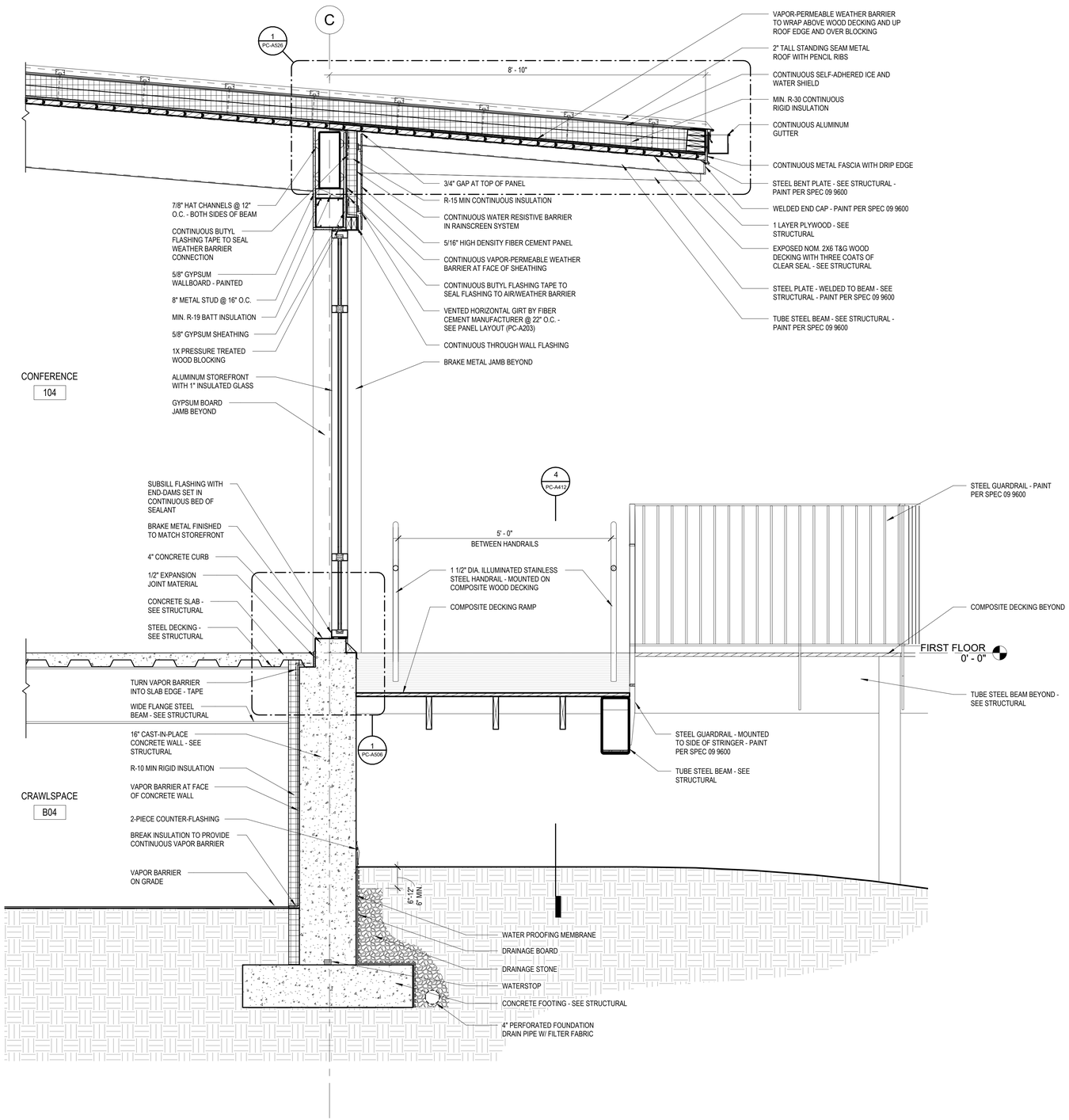

1 PC-A423 WALL SECTION @ CONFERENCE ROOM
3/4" = 1'-0"

ROOF DECKING NOTES

1. STRUCTURAL WOOD ROOF DECK IS ALSO FINISHED CEILING - **NO FASTENERS SHALL PENETRATE DECKING**
2. NO EXPOSED CONDUIT SHALL BE RUN ACROSS UNDERSIDE OF WOOD DECKING WITHOUT REVIEW AND COORDINATION WITH THE ARCHITECT. COORDINATE FOR LIGHTING, SECURITY, ETC.

Susan Hatchell
Landscape Architecture, PLLC
711 W. North Street, Raleigh, NC 27603
p: 919-838-9600 f: 919-838-9700

Esse Architects
632 PERSHING ROAD | RALEIGH, NORTH CAROLINA 27608

WALL SECTIONS

LAKE MYRA COUNTY PARK
Wake County, NC

REVISIONS

Esse Architects P.A. Registered Architectural Corporation 52498 North Carolina Raleigh, NC

MIRANDA DONNER ROTHOFF Registered Architect 11063 Miranda Rothoff NORTH CAROLINA 7/27/2026 Raleigh, NC

Date: 07/27/26

PC-A423

Docusign Envelope ID: 8BDE9837-570C-8E6A-8205-A6B2A1B21988

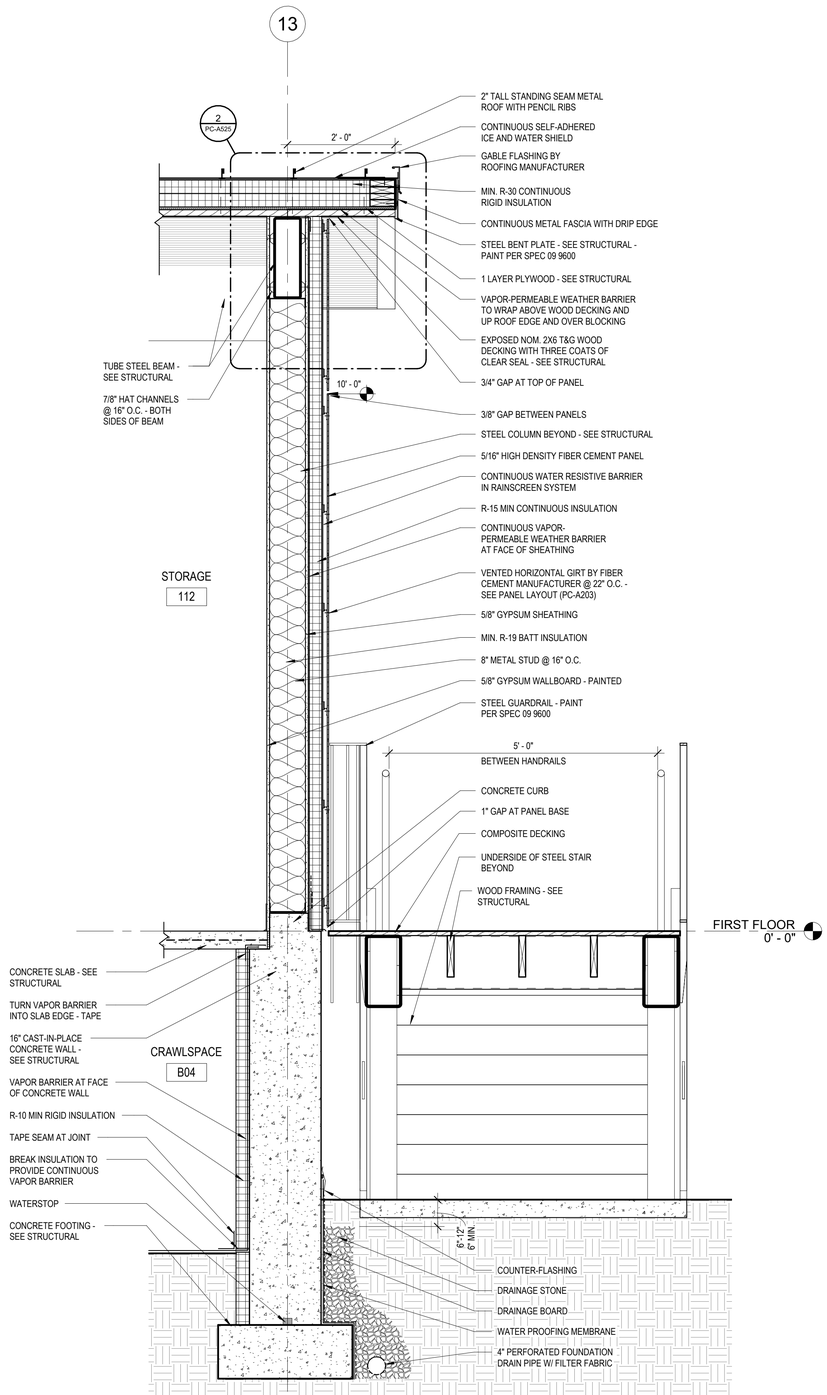

1 PC-A424 WALL SECTION @ STORAGE
3/4" = 1'-0"

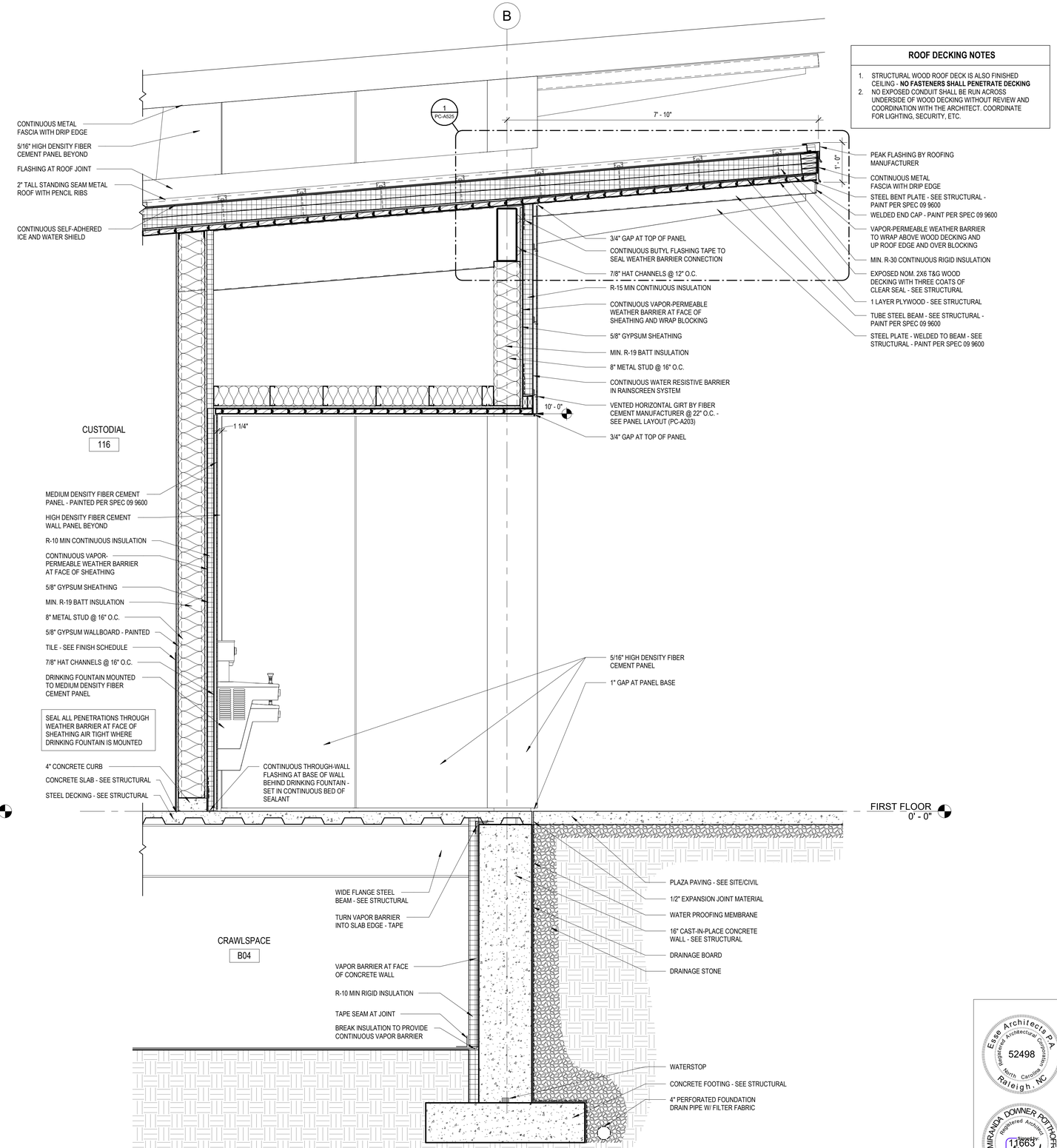

2 PC-A424 WALL SECTION @ RESTROOM ENTRY
3/4" = 1'-0"

ROOF DECKING NOTES

1. STRUCTURAL WOOD ROOF DECK IS ALSO FINISHED CEILING - **NO FASTENERS SHALL PENETRATE DECKING**
2. NO EXPOSED CONDUIT SHALL BE RUN ACROSS UNDERSIDE OF WOOD DECKING WITHOUT REVIEW AND COORDINATION WITH THE ARCHITECT. COORDINATE FOR LIGHTING, SECURITY, ETC.

Susan Hatchell
Landscape Architecture, PLLC
711 W. North Street, Raleigh, NC 27603
p: 919-838-9600 f: 919-838-9700

Esse Architects
832 PERSHING ROAD | RALEIGH, NORTH CAROLINA 27608

WALL SECTIONS

LAKE MYRA COUNTY PARK
Wake County, NC

REVISIONS

Esse Architects P.A. Registered Architectural Corporation 52498 North Carolina Raleigh, NC

MIRANDA DONNER POTHIER Registered Architect 11663 North Carolina Raleigh, NC
Docusigned by: Miranda Pothier
IEC0454B9B284B8...
7/27/2026

Date: 07/27/26

PC-A424

Docusign Envelope ID: 8BDE9837-570C-8E6A-8205-A6B2A1B21988

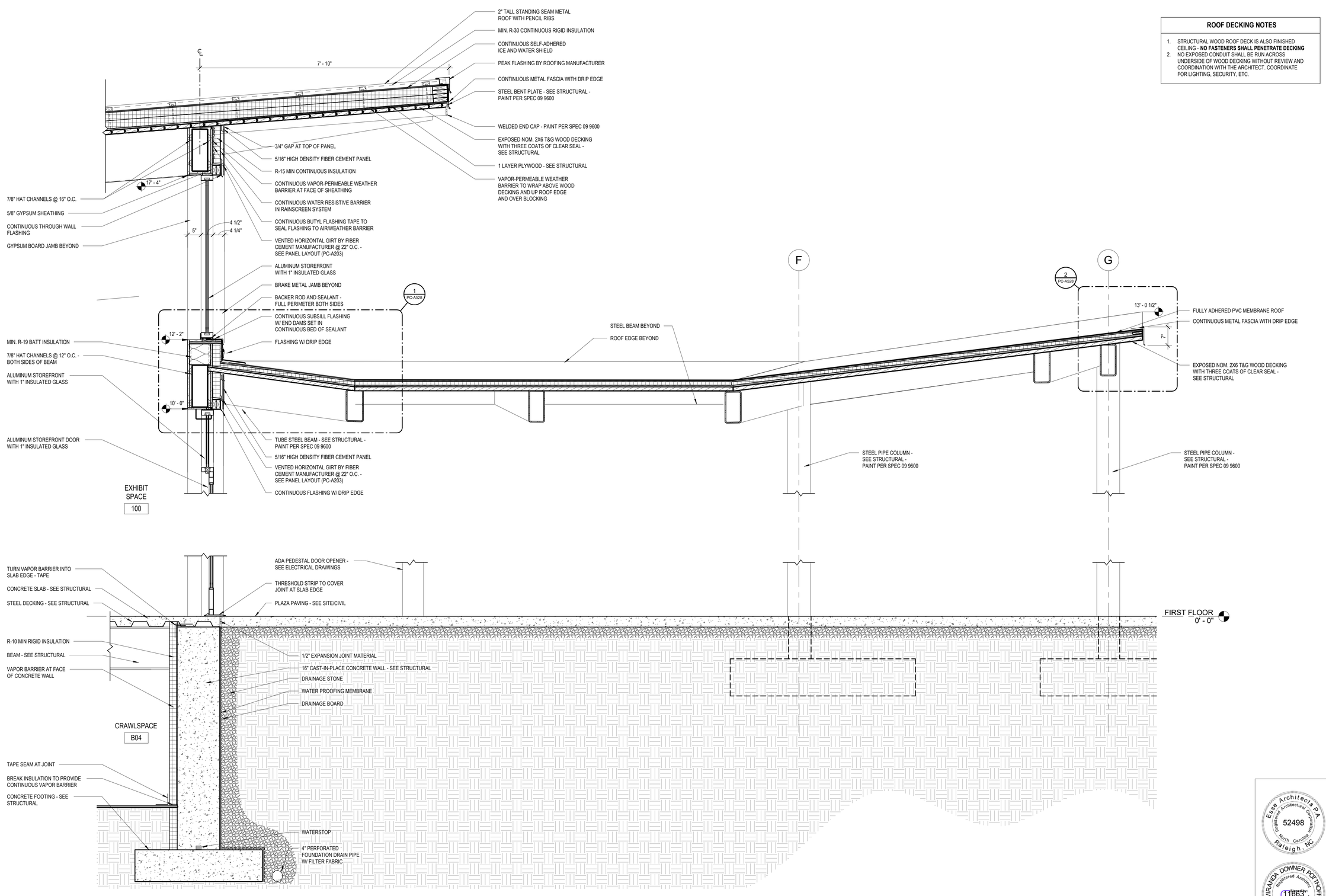

1 PC-A425 WALL SECTION @ MAIN ENTRANCE
3/4" = 1'-0"

ROOF DECKING NOTES

1. STRUCTURAL WOOD ROOF DECK IS ALSO FINISHED CEILING - **NO FASTENERS SHALL PENETRATE DECKING**
2. NO EXPOSED CONDUIT SHALL BE RUN ACROSS UNDERSIDE OF WOOD DECKING WITHOUT REVIEW AND COORDINATION WITH THE ARCHITECT. COORDINATE FOR LIGHTING, SECURITY, ETC.

Susan Hatchell Landscape Architecture, PLLC
711 W. North Street, Raleigh, NC 27603
p: 919-838-9600 f: 919-838-9700

Esse Architects
632 PERSHING ROAD | RALEIGH, NORTH CAROLINA 27608

WALL SECTIONS

LAKE MYRA COUNTY PARK
Wake County, NC

REVISIONS

Esse Architects P.A. 52498 Registered Architectural Corporation North Carolina Raleigh, NC

MIRANDA DONNER POTTHOFF Registered Architect 11663 Miranda Potthoff 7/27/2026 Raleigh, NC

Date: 07/27/26

PC-A425

Docusign Envelope ID: 8BDE9837-570C-8E6A-8205-A6B2A1B21988

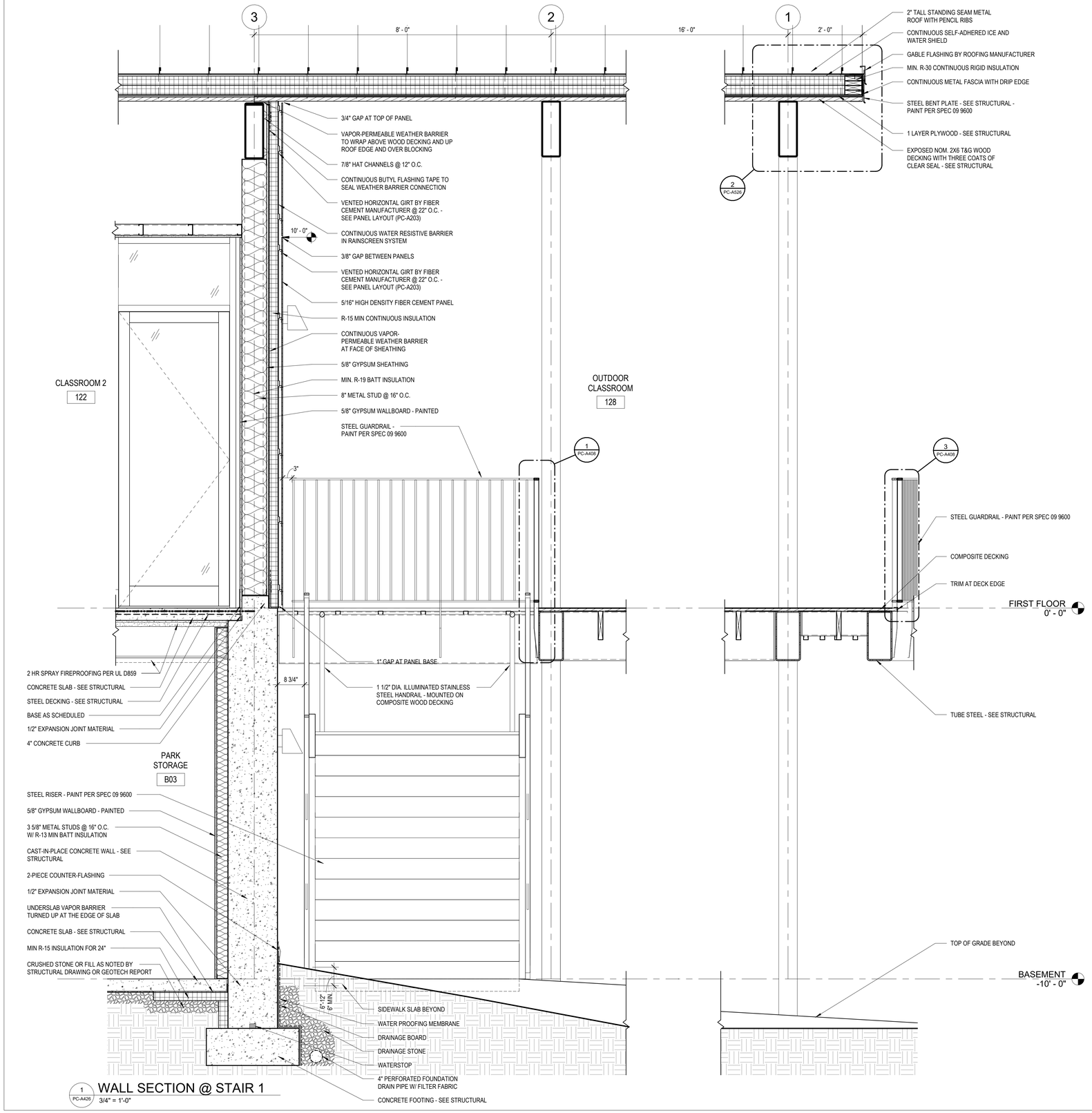

1 PC-A426 WALL SECTION @ STAIR 1
3/4" = 1'-0"

ROOF DECKING NOTES

1. STRUCTURAL WOOD ROOF DECK IS ALSO FINISHED CEILING - **NO FASTENERS SHALL PENETRATE DECKING**
2. NO EXPOSED CONDUIT SHALL BE RUN ACROSS UNDERSIDE OF WOOD DECKING WITHOUT REVIEW AND COORDINATION WITH THE ARCHITECT. COORDINATE FOR LIGHTING, SECURITY, ETC.

Susan Hatchell
Landscape Architecture, PLLC
711 W. North Street, Raleigh, NC 27603
p: 919-838-9600 f: 919-838-9700

Esse Architects
832 PERSHING ROAD | RALEIGH, NORTH CAROLINA 27608

WALL SECTIONS

LAKE MYRA COUNTY PARK
Wake County, NC

REVISIONS

Esse Architects P.A. Registered Architectural Corporation 52498 North Carolina Raleigh, NC

MIRANDA DONNER POTTHOFF Registered Architect 11663 NORTH CAROLINA Raleigh, NC
Miranda Potthoff
IECHMARK 034484
7/27/2026

Date: 07/27/26

PC-A426

Docusign Envelope ID: 8BDE9837-570C-8E6A-8205-A6B2A1B21988

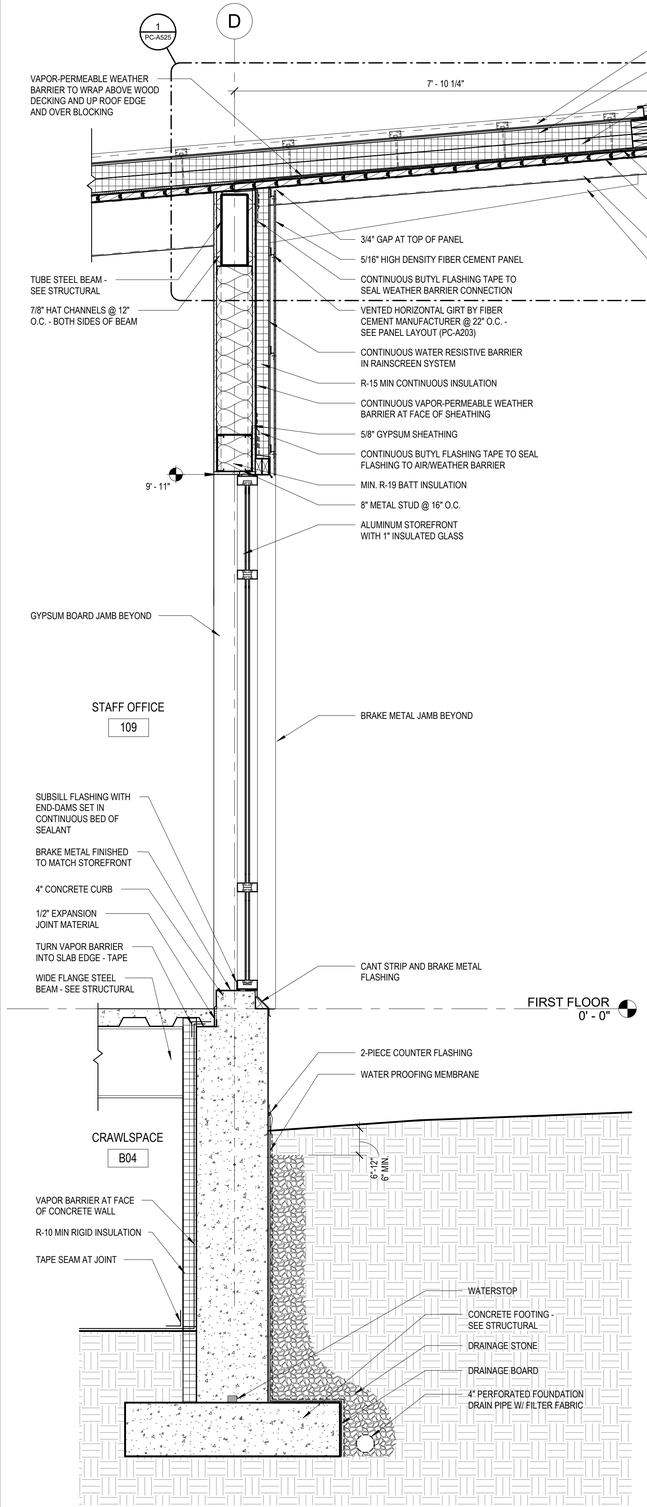

1 PC-A427 WALL SECTION @ STAFF WINDOW
3/4" = 1'-0"

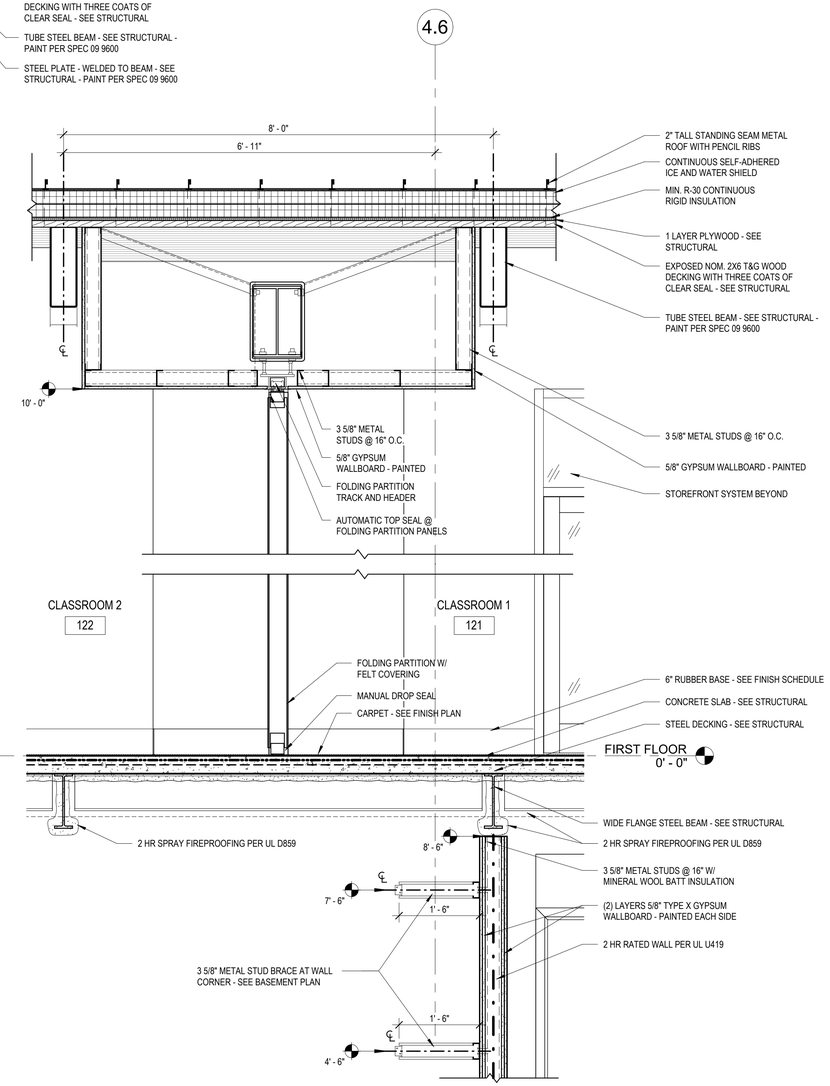

2 PC-A427 WALL SECTION @ FOLDING PARTITION
3/4" = 1'-0"

ROOF DECKING NOTES

1. STRUCTURAL WOOD ROOF DECK IS ALSO FINISHED CEILING - **NO FASTENERS SHALL PENETRATE DECKING**
2. NO EXPOSED CONDUIT SHALL BE RUN ACROSS UNDERSIDE OF WOOD DECKING WITHOUT REVIEW AND COORDINATION WITH THE ARCHITECT. COORDINATE FOR LIGHTING, SECURITY, ETC.

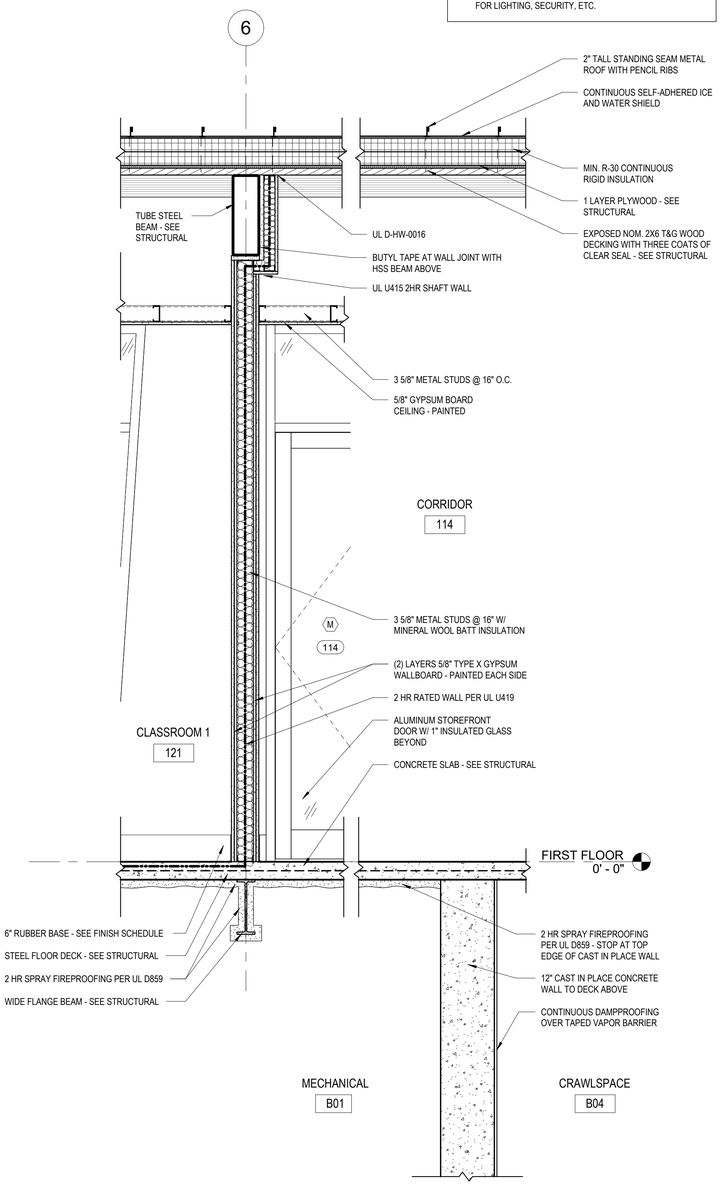

3 PC-A427 INT. WALL SECTION @ CLASSROOM / CORRIDOR
3/4" = 1'-0"

Susan Hatchell
Landscape Architecture, PLLC
711 W. North Street, Raleigh, NC 27603
p: 919-838-9600 f: 919-838-9700

Esse Architects
830 PERSHING ROAD | RALEIGH, NORTH CAROLINA 27608

WALL SECTIONS

LAKE MYRA COUNTY PARK
Wake County, NC

REVISIONS

Esse Architects P.A. Registered Architectural Corporation 52498 North Carolina Raleigh, NC

MIRANDA DONNER POTTHOFF Registered Architect 11863 North Carolina Raleigh, NC 7/27/2026

Miranda Potthoff

Date: 07/27/26

PC-A427

Docusign Envelope ID: 8BDE9837-570C-8E6A-8205-A6B2A1B21988

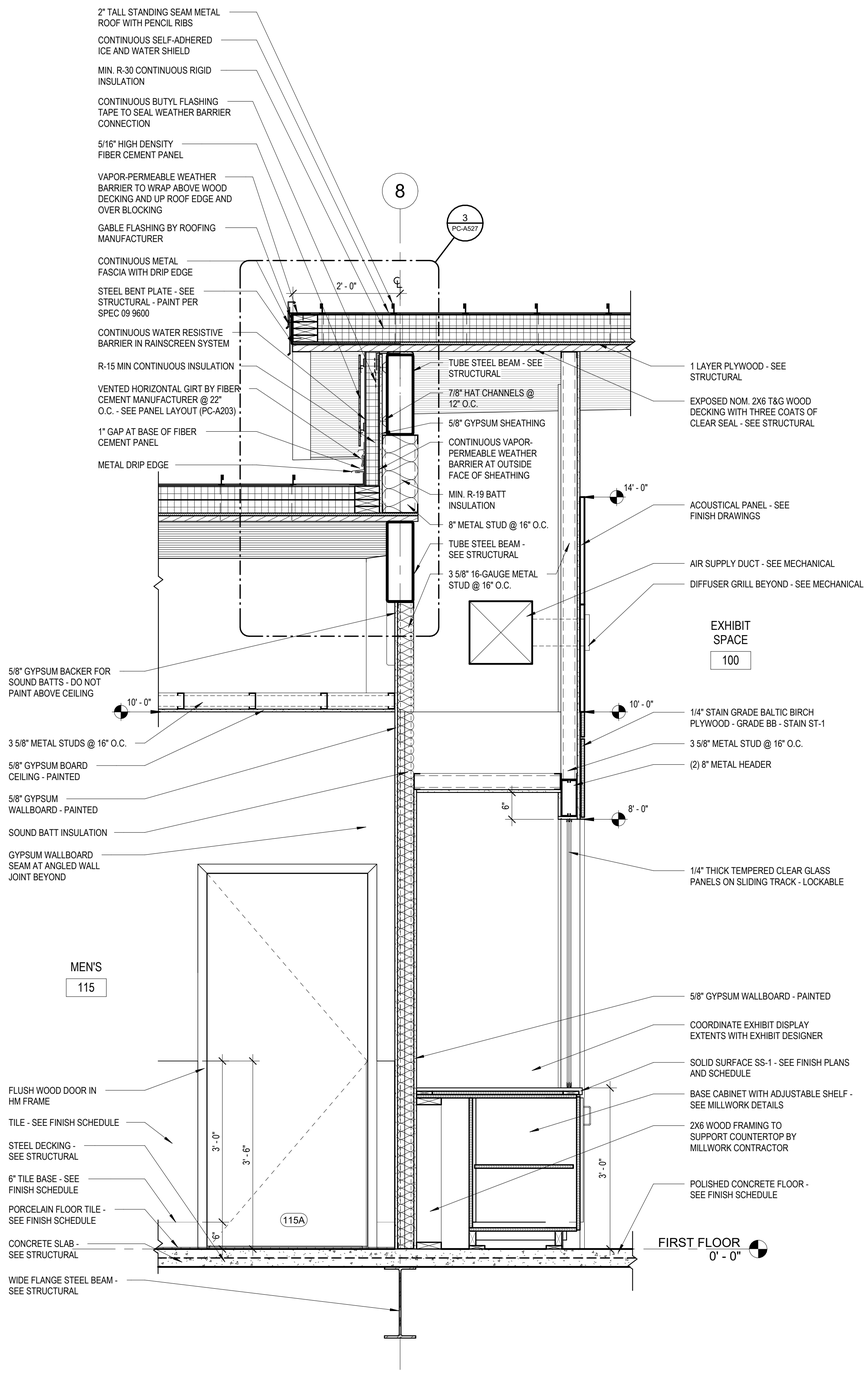

1 PC-A428 WALL SECTION @ DISPLAY
3/4" = 1'-0"

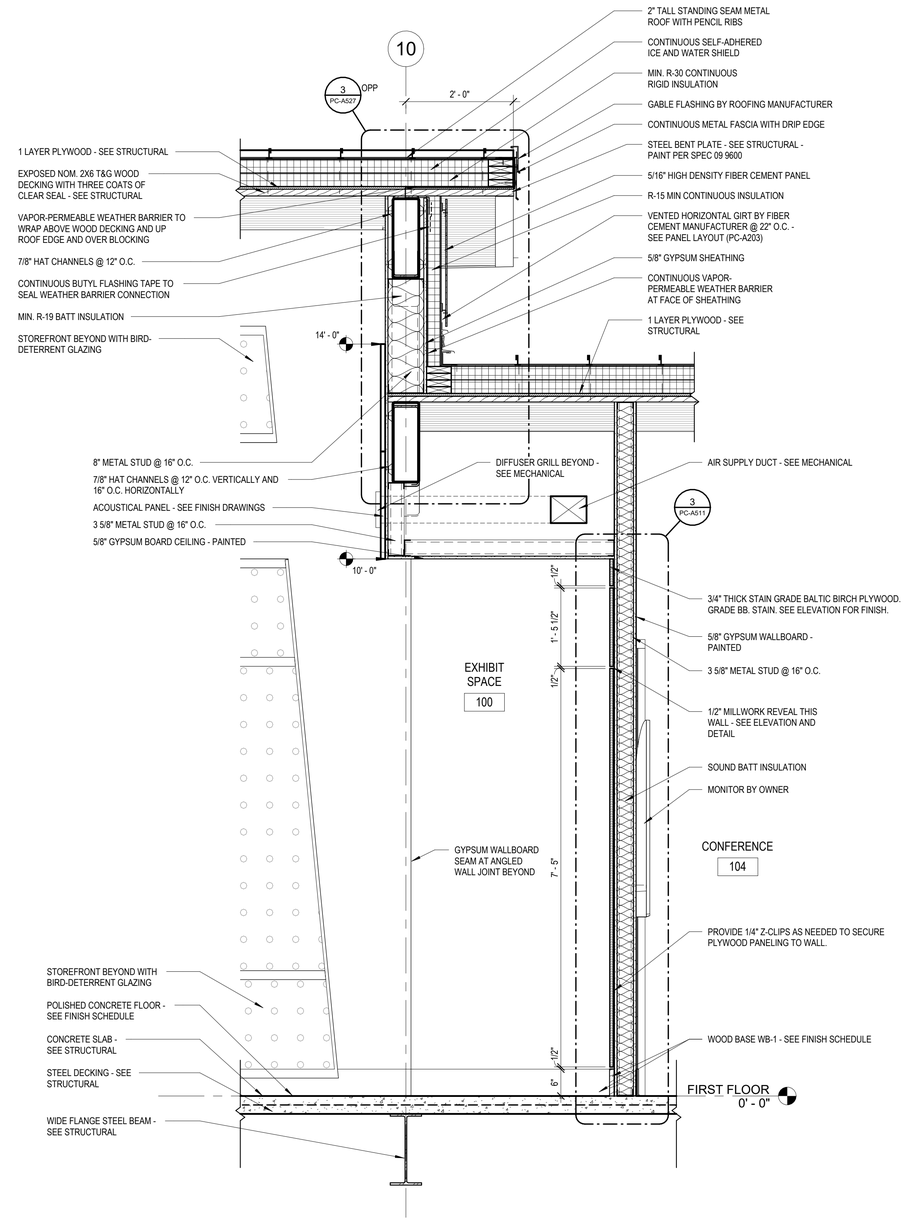

2 PC-A428 WALL SECTION @ DISPLAY SPACE
3/4" = 1'-0"

ROOF DECKING NOTES

1. STRUCTURAL WOOD ROOF DECK IS ALSO FINISHED CEILING - **NO FASTENERS SHALL PENETRATE DECKING**
2. NO EXPOSED CONDUIT SHALL BE RUN ACROSS UNDERSIDE OF WOOD DECKING WITHOUT REVIEW AND COORDINATION WITH THE ARCHITECT. COORDINATE FOR LIGHTING, SECURITY, ETC.

Susan Hatchell
Landscape Architecture, PLLC
711 W. North Street, Raleigh, NC 27603
p: 919-838-9600 f: 919-838-9700

Esse Architects
632 PERSHING ROAD | RALEIGH, NORTH CAROLINA 27608

WALL SECTIONS

LAKE MYRA COUNTY PARK
Wake County, NC

REVISIONS

Esse Architects P.A. Registered Architectural Corporation 52498 North Carolina Raleigh, NC

MIRANDA DOWNER POTTHOFF Registered Architect 11663 North Carolina Raleigh, NC 7/27/2026

Date: 07/27/26

PC-A428

Docusign Envelope ID: 8BDE9837-570C-8E6A-8205-A6B2A1B21988

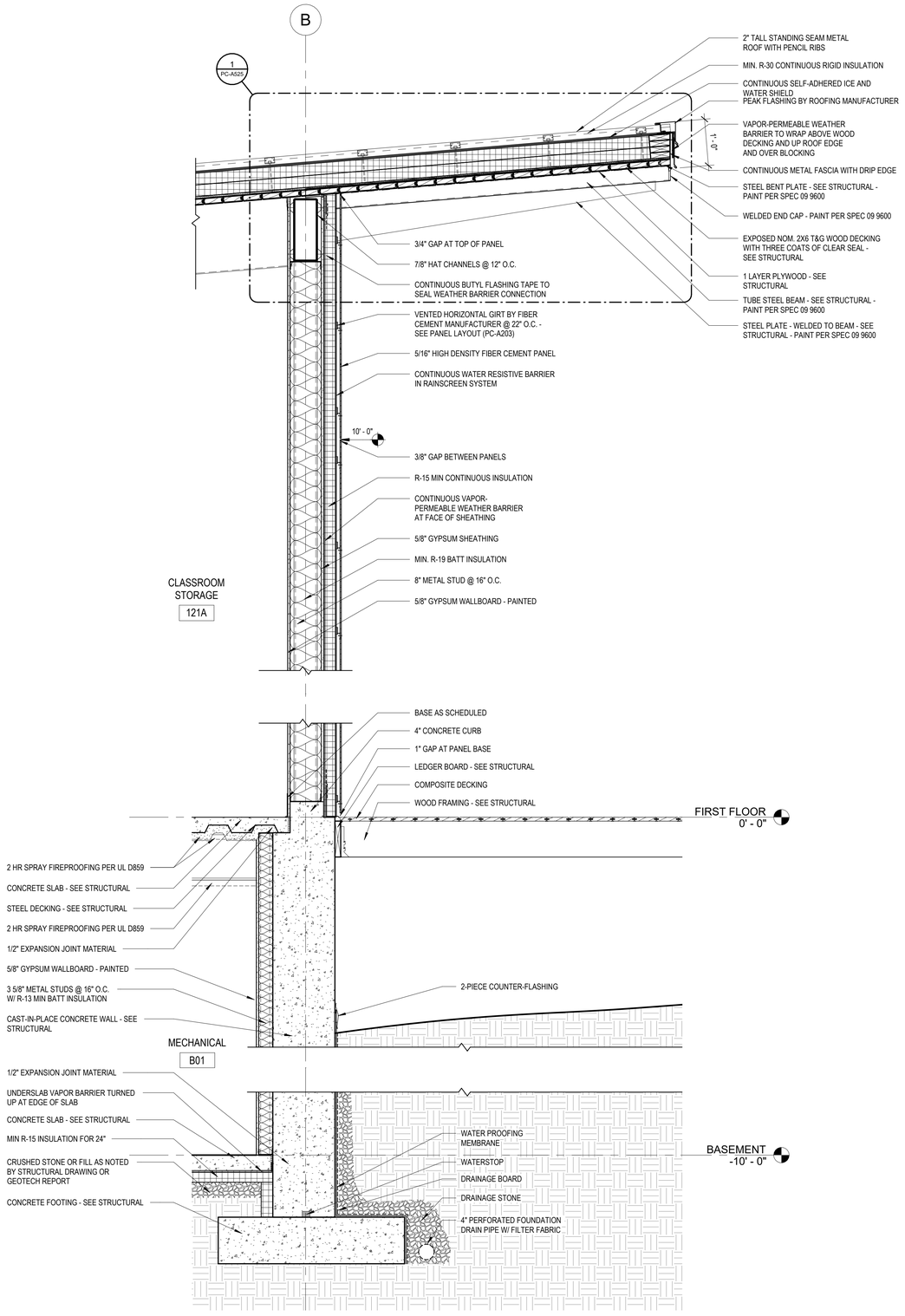

1 PC-A429 WALL SECTION @ CLASSROOM
3/4" = 1'-0"

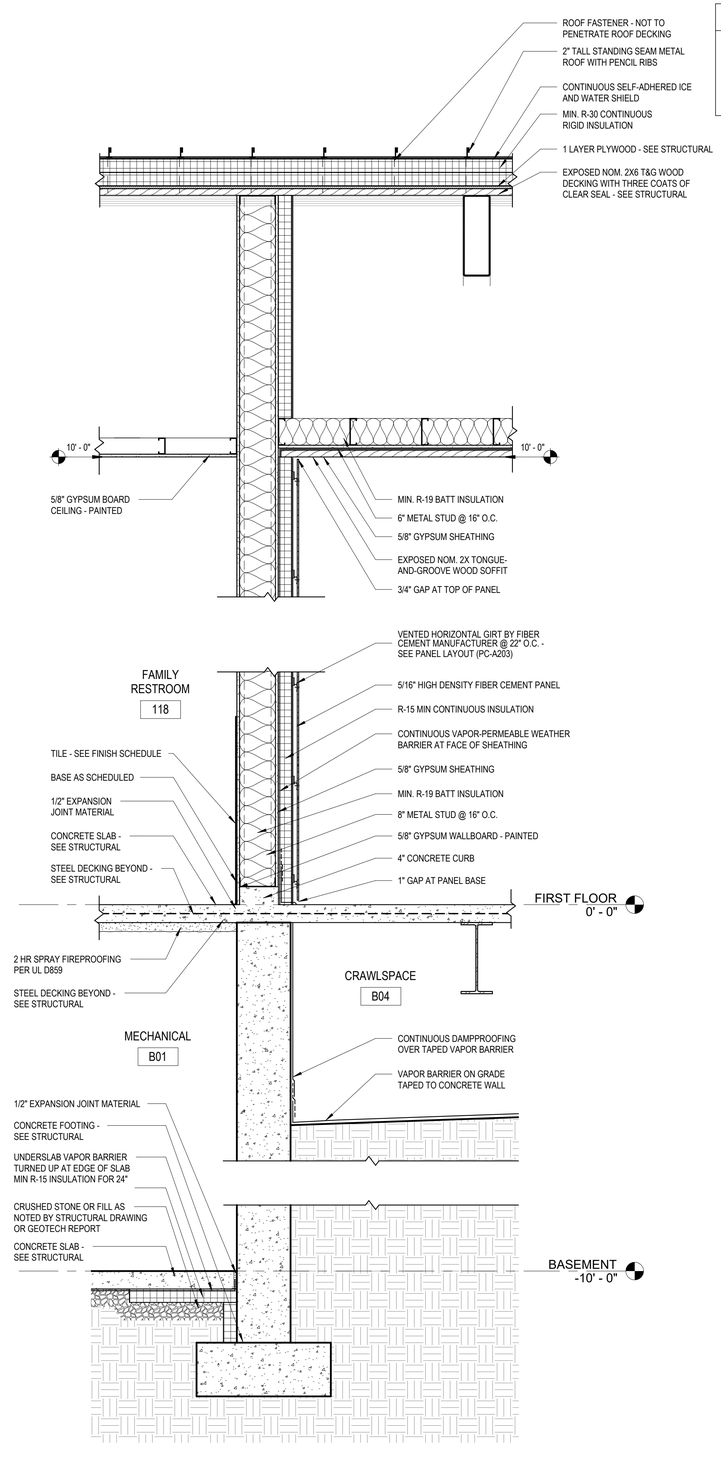

2 PC-A429 WALL SECTION @ BASEMENT WALL
3/4" = 1'-0"

ROOF DECKING NOTES

1. STRUCTURAL WOOD ROOF DECK IS ALSO FINISHED CEILING - **NO FASTENERS SHALL PENETRATE DECKING**
2. NO EXPOSED CONDUIT SHALL BE RUN ACROSS UNDERSIDE OF WOOD DECKING WITHOUT REVIEW AND COORDINATION WITH THE ARCHITECT. COORDINATE FOR LIGHTING, SECURITY, ETC.

Susan Hatchell
Landscape Architecture, PLLC
711 W. North Street, Raleigh, NC 27603
p: 919-838-9600 f: 919-838-9700

Esse Architects
632 PERSHING ROAD | RALEIGH, NORTH CAROLINA 27608

WALL SECTIONS

LAKE MYRA COUNTY PARK
Wake County, NC

Esse Architects P.A. Registered Architectural Corporation 52498 North Carolina Raleigh, NC

MIRANDA DONNER ROTTHOFF Registered Architect 11663 Licensed to practice in North Carolina Raleigh, NC 7/27/2026

REVISIONS

Date: 07/27/26

PC-A429

Docusign Envelope ID: 8BDE9837-570C-8E6A-8205-A6B2A1B21988

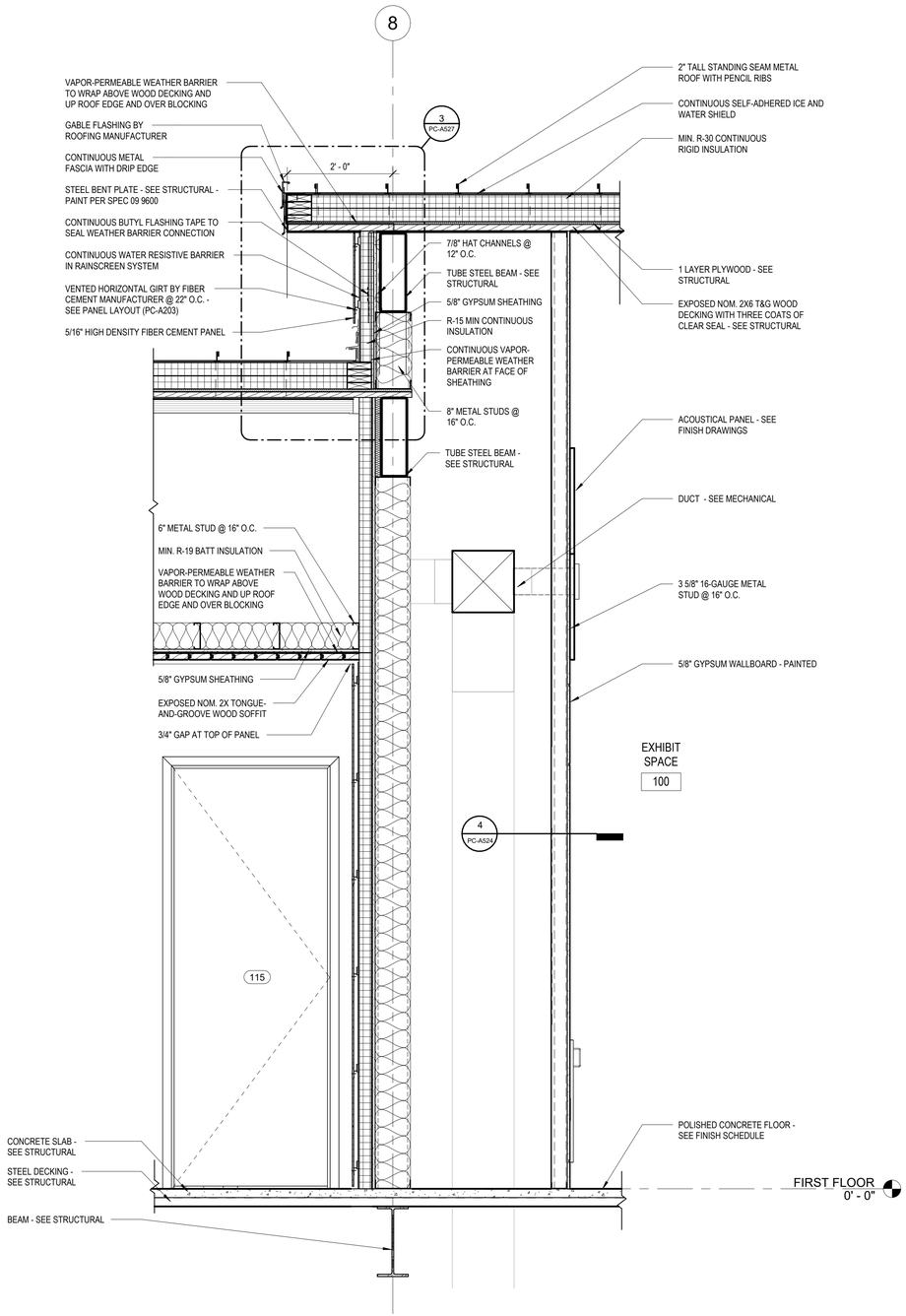

1 PC-A430 WALL SECTION @ MECHANICAL CHASE
3/4" = 1'-0"

ROOF DECKING NOTES

1. STRUCTURAL WOOD ROOF DECK IS ALSO FINISHED CEILING - **NO FASTENERS SHALL PENETRATE DECKING**
2. NO EXPOSED CONDUIT SHALL BE RUN ACROSS UNDERSIDE OF WOOD DECKING WITHOUT REVIEW AND COORDINATION WITH THE ARCHITECT. COORDINATE FOR LIGHTING, SECURITY, ETC.

Susan Hatchell
Landscape Architecture, PLLC
711 W. North Street, Raleigh, NC 27603
p: 919-838-9600 f: 919-838-9700

Esse Architects
632 PERSHING ROAD | RALEIGH, NORTH CAROLINA 27608

WALL SECTIONS

LAKE MYRA COUNTY PARK
Wake County, NC

REVISIONS

Esse Architects P.A. Registered Architectural Corporation 52498 North Carolina Raleigh, NC

MIRANDA DONNER ROTHOFF Registered Architect 17663 Licensed North Carolina Raleigh, NC 7/27/2026

Date: 07/27/26

PC-A430

Docusign Envelope ID: 8BDE9837-570C-8E6A-8205-A6B2A1B21988

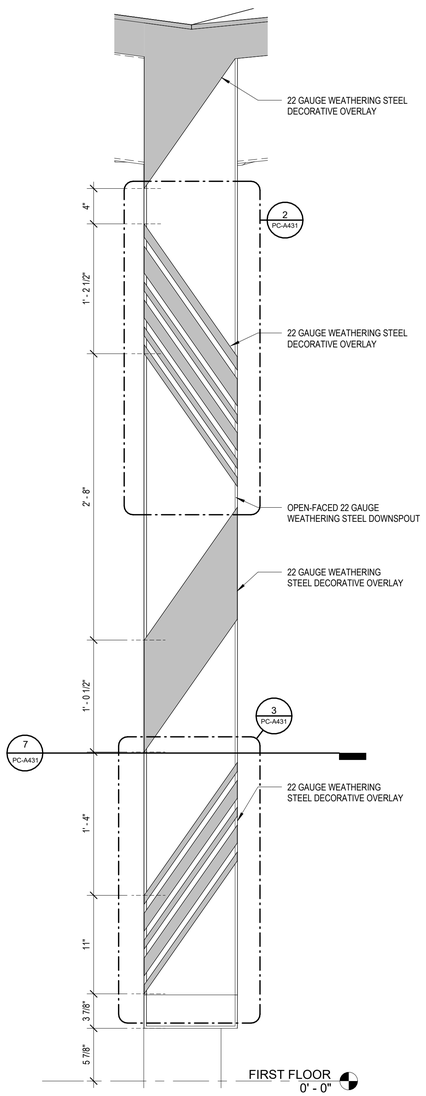

1 PC-A431 CANOPY DOWNSPOUT DETAIL
1 1/2" = 1'-0"

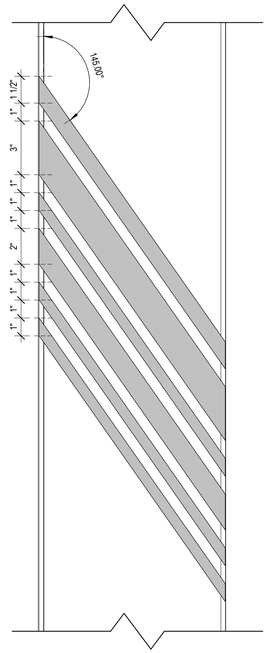

2 PC-A431 DOWNSPOUT - UPPER CUTOUT DETAIL
3" = 1'-0"

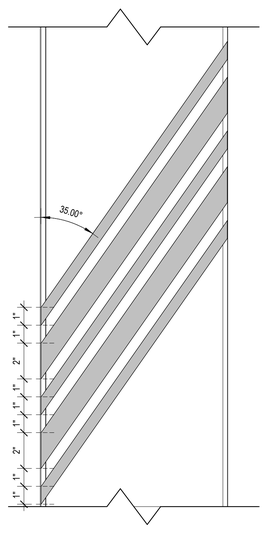

3 PC-A431 DOWNSPOUT - LOWER CUTOUT DETAIL
3" = 1'-0"

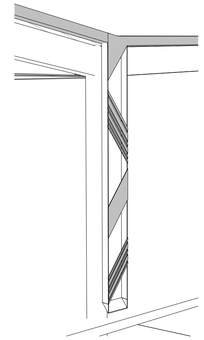

4 PC-A431 3D VIEW @ CANOPY DOWNSPOUT

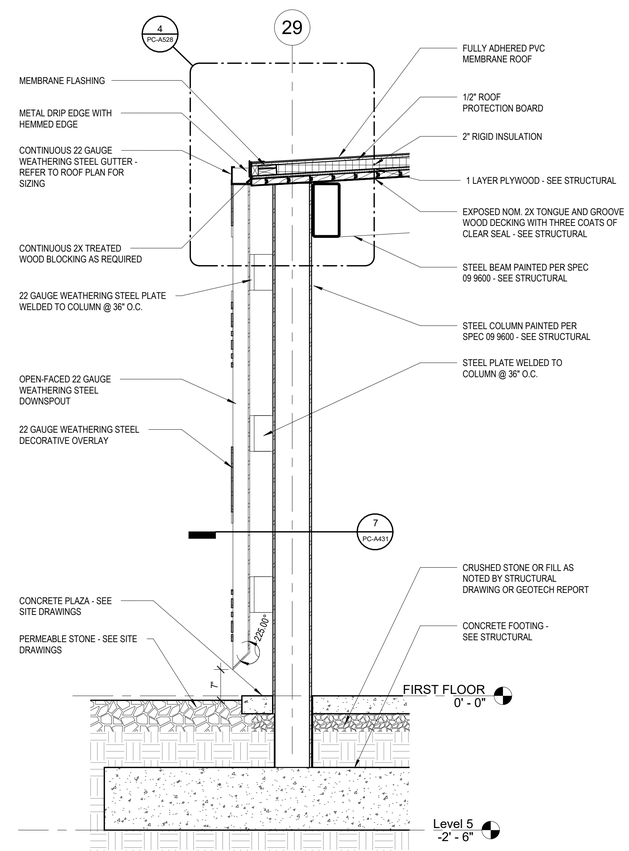

5 PC-A431 WALL SECTION @ CANOPY DOWNSPOUT
3/4" = 1'-0"

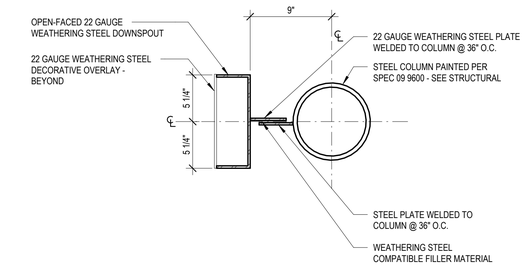

7 PC-A431 PLAN DETAIL @ WEATHERING STEEL DOWNSPOUT
1 1/2" = 1'-0"

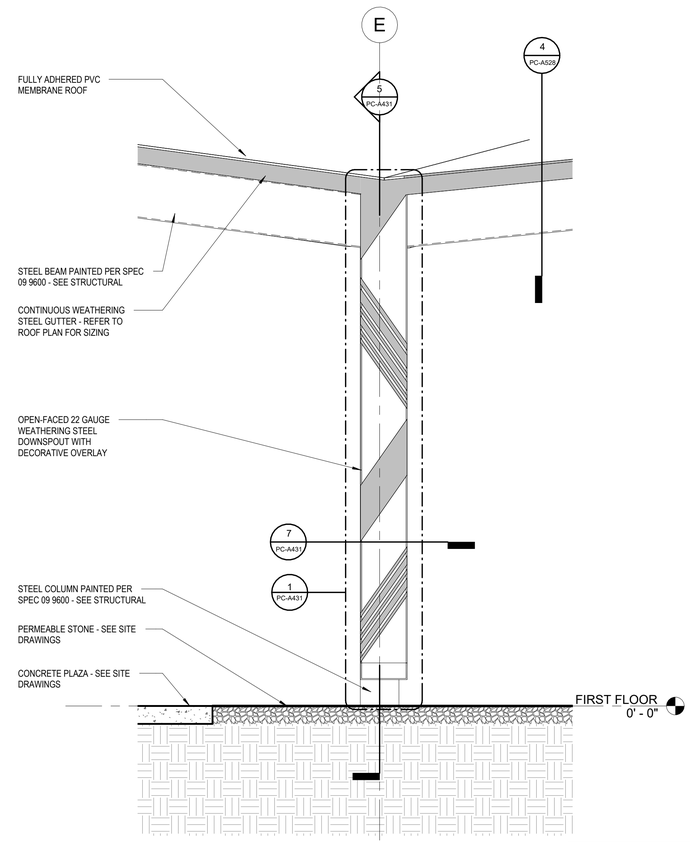

6 PC-A431 ELEVATION @ CANOPY DOWNSPOUT
3/4" = 1'-0"

Susan Hatchell
Landscape Architecture, PLLC
711 W. North Street, Raleigh, NC 27603
p: 919-838-9600 f: 919-838-9700

Esse Architects
832 PERSHING ROAD | RALEIGH, NORTH CAROLINA 27608

CANOPY DOWNSPOUT DETAILS

LAKE MYRA COUNTY PARK
Wake County, NC

REVISIONS

Esse Architects P.A. Registered Architectural Corporation 52498 North Carolina Raleigh, NC

MIRANDA DOWNER POTTHOFF Registered Architect 11663 North Carolina Raleigh, NC
Miranda Potthoff
IEC8454BB023484
7/27/2026

Date: 07/27/26

PC-A431

Docusign Envelope ID: 8BDE9837-570C-8E6A-8205-A6B2A1B21988

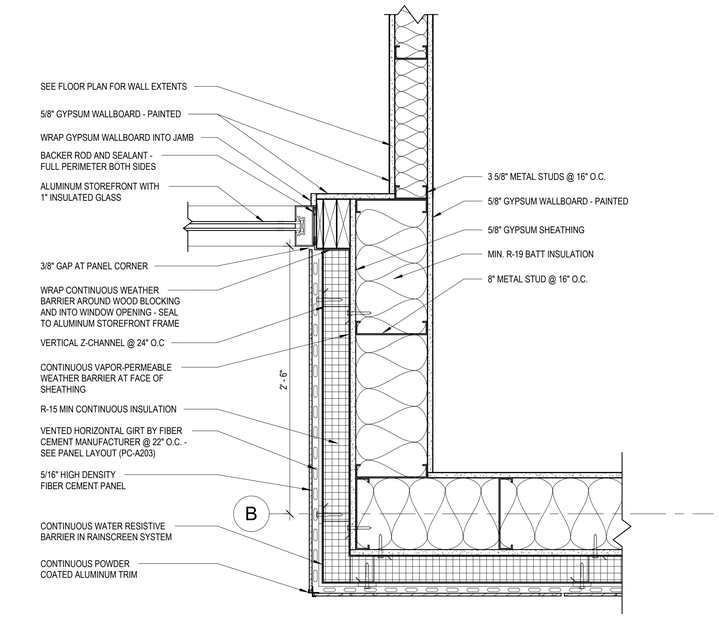

1 PC-A501 PLAN DETAIL @ CLASSROOM ENTRY
1 1/2" = 1'-0"

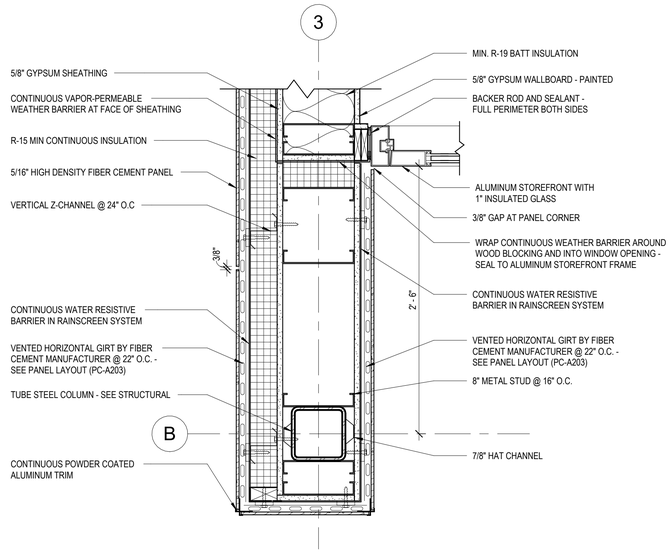

2 PC-A501 PLAN DETAIL @ CLASSROOM WING WALL
1 1/2" = 1'-0"

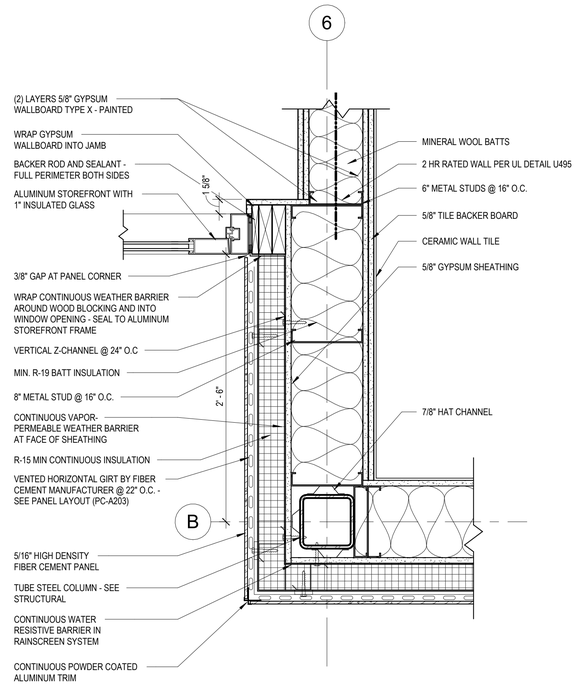

3 PC-A501 PLAN DETAIL @ FAMILY BATHROOM
1 1/2" = 1'-0"

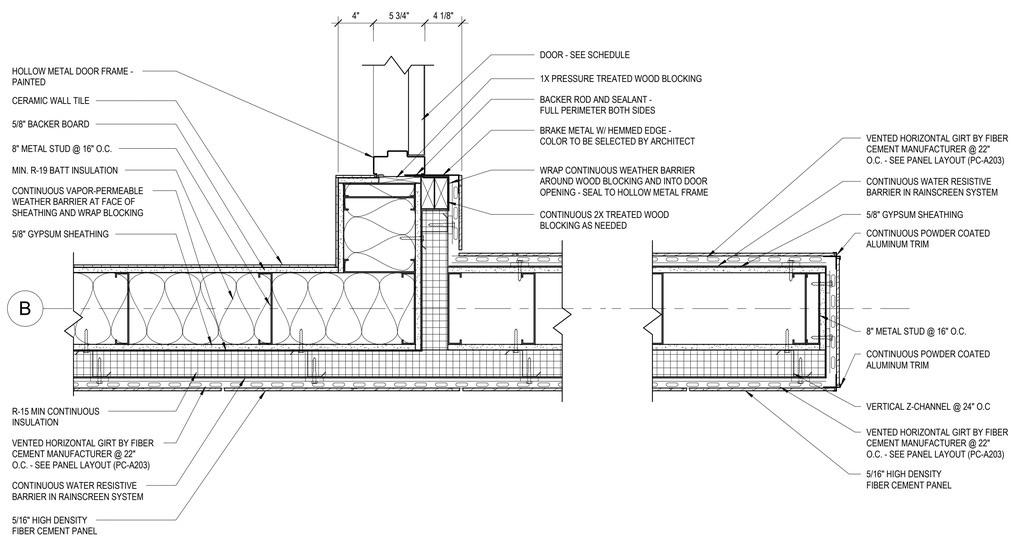

4 PC-A501 PLAN DETAIL @ RESTROOM WING WALL
1 1/2" = 1'-0"

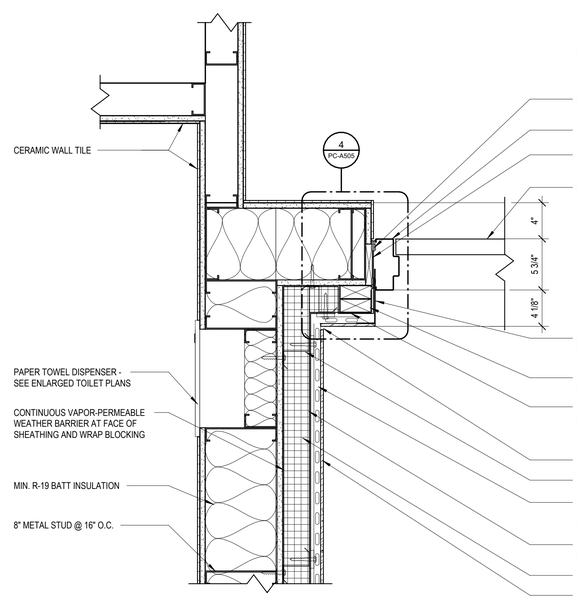

5 PC-A501 PLAN DETAIL @ WOMEN'S RESTROOM ENTRY
1 1/2" = 1'-0"

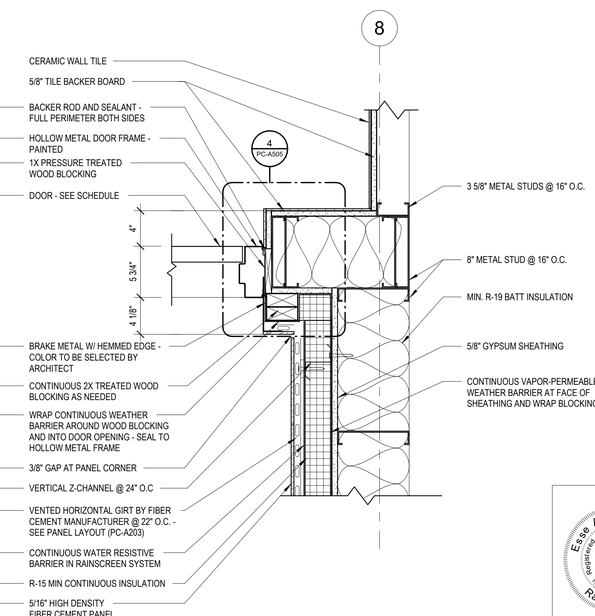

6 PC-A501 PLAN DETAIL @ MEN'S RESTROOM
1 1/2" = 1'-0"

Susan Hatchell
Landscape Architecture, PLLC
711 W. North Street, Raleigh, NC 27603
p: 919-838-9600 f: 919-838-9700

Esse Architects
630 PERSHING ROAD | RALEIGH, NORTH CAROLINA 27608

PLAN DETAILS

LAKE MYRA COUNTY PARK
Wake County, NC

REVISIONS

Esse Architects P.A. Registered Architectural Corporation 52498 North Carolina Raleigh, NC

MIRANDA DONNER ROTHOFF Registered Architect 17663 North Carolina Raleigh, NC
Signature: Miranda Rothoff
Adobe Sign: CC=US,O=adobe.com,CN=Adobe Sign CA G3,E=234484
7/27/2026

Date: 07/27/26

PC-A501

Docusign Envelope ID: 8BDE9837-570C-8E6A-8205-A6B2A1B21988

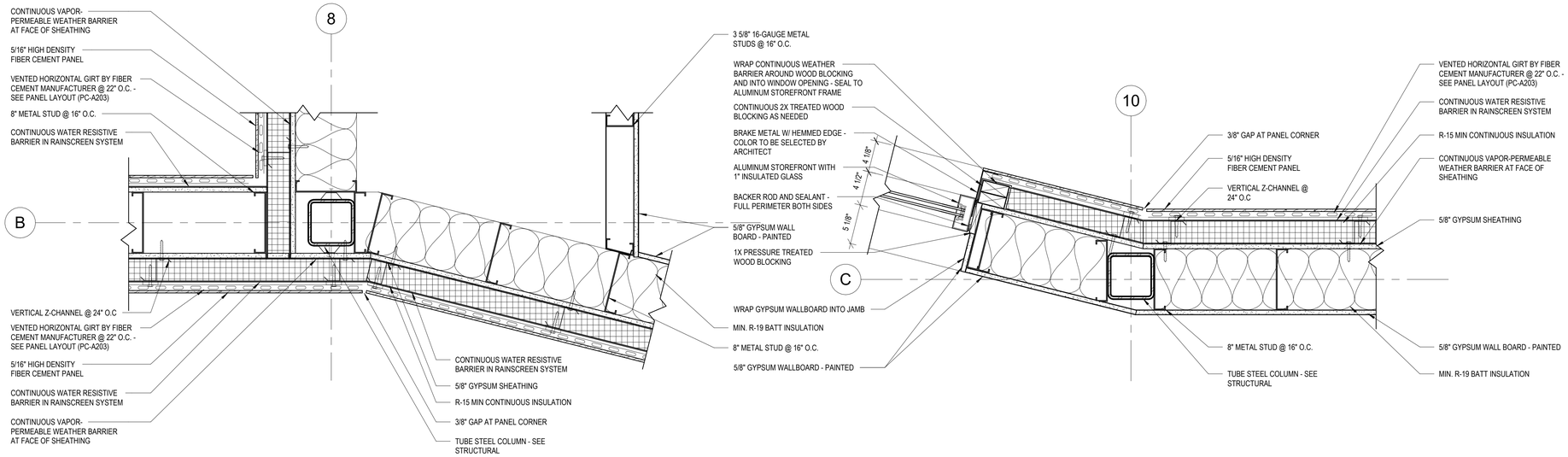

1 PC-A502 PLAN DETAIL @ WALL ANGLE
1 1/2" = 1'-0"

2 PC-A502 PLAN DETAIL @ WINDOW J
1 1/2" = 1'-0"

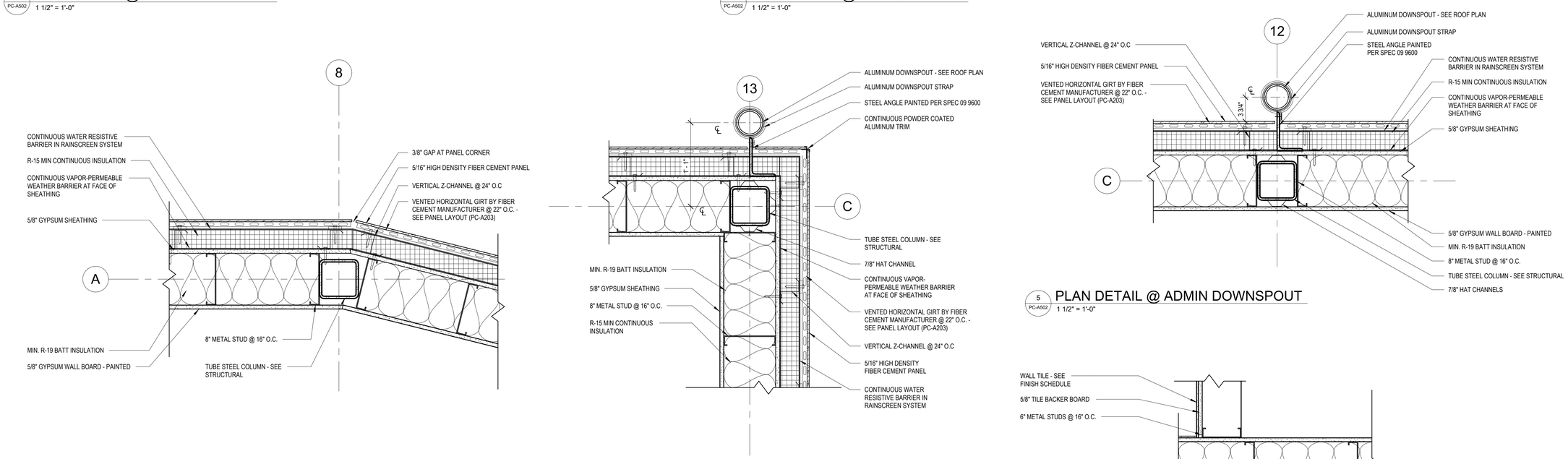

3 PC-A502 PLAN DETAIL @ ANGLED WALL
1 1/2" = 1'-0"

4 PC-A502 PLAN DETAIL @ TYP. EXTERIOR CORNER
1 1/2" = 1'-0"

5 PC-A502 PLAN DETAIL @ ADMIN DOWNSPOUT
1 1/2" = 1'-0"

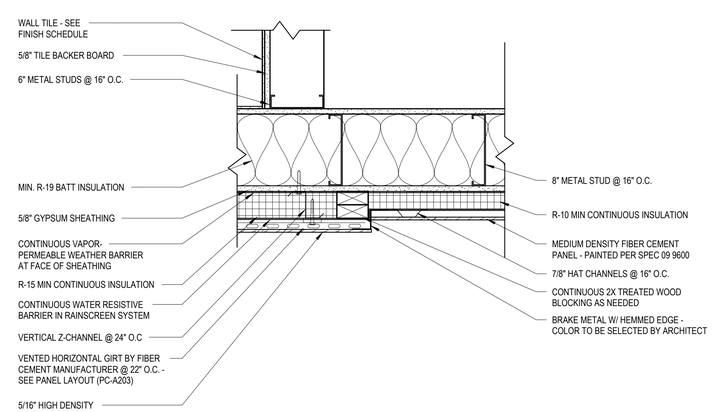

6 PC-A502 PLAN DETAIL @ DRINKING FOUNTAIN
1 1/2" = 1'-0"

Susan Hatchell
Landscape Architecture, PLLC
711 W. North Street, Raleigh, NC 27603
p: 919-838-9600 f: 919-838-9700

Esse Architects
632 PERSHING ROAD | RALEIGH, NORTH CAROLINA 27608

PLAN DETAILS

LAKE MYRA COUNTY PARK
Wake County, NC

REVISIONS

Esse Architects P.A. Registered Architectural Corporation 52498 North Carolina Raleigh, NC

MIRANDA DOWNER POTTHOFF Registered Architect 11653 North Carolina Raleigh, NC
Docusigned by: Miranda Potthoff
1EC04B8B2B284B6...
7/27/2026

Date: 07/27/26

PC-A502

Docusign Envelope ID: 8BDE9837-570C-8E6A-8205-A6B2A1B21988

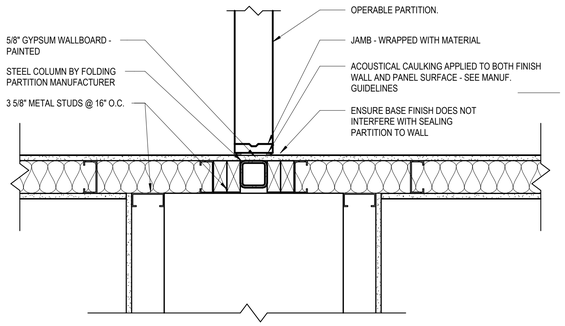

1 PC-A503 PLAN DETAIL @ FOLDING PARTITION
1 1/2" = 1'-0"

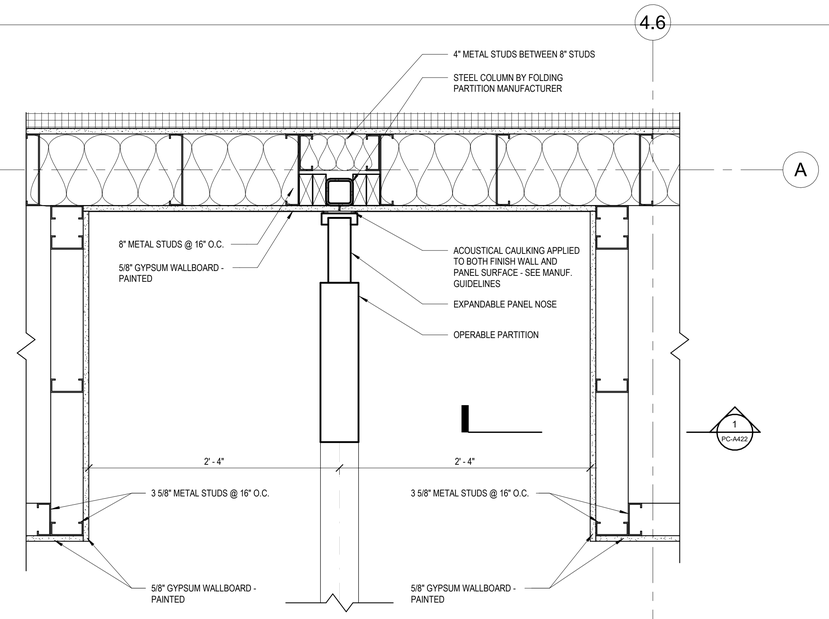

2 PC-A503 PLAN DETAIL @ FOLDING PARTITION1
1 1/2" = 1'-0"

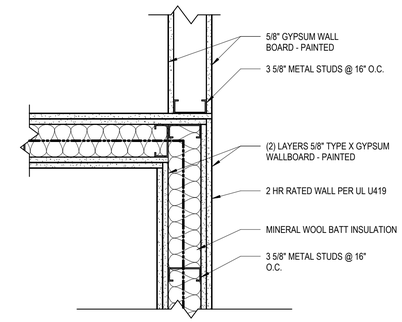

3 PC-A503 PLAN DETAIL @ FIRE RATED WALL
1 1/2" = 1'-0"

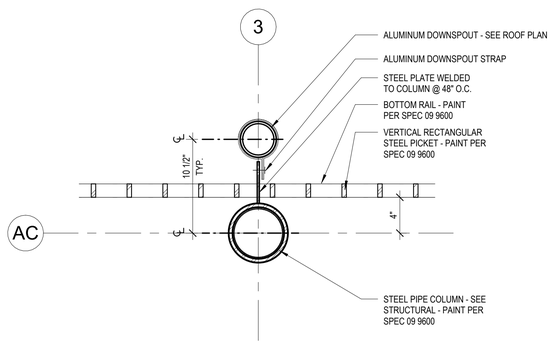

4 PC-A503 PLAN DETAIL @ DECK DOWNSPOUT
1 1/2" = 1'-0"

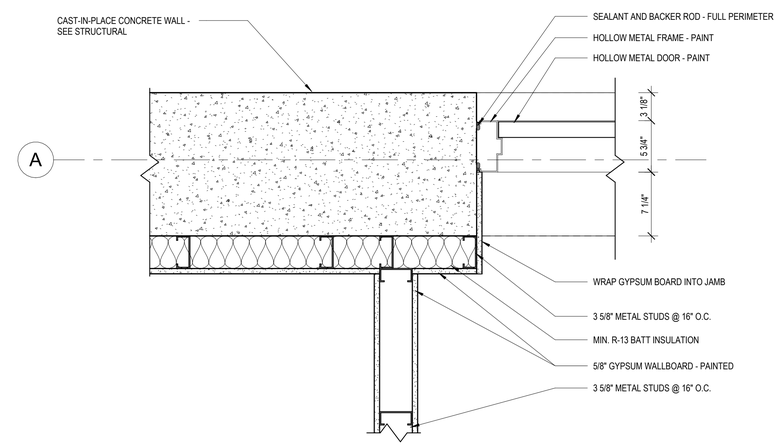

5 PC-A503 PLAN DETAIL @ BASEMENT WALL
1 1/2" = 1'-0"

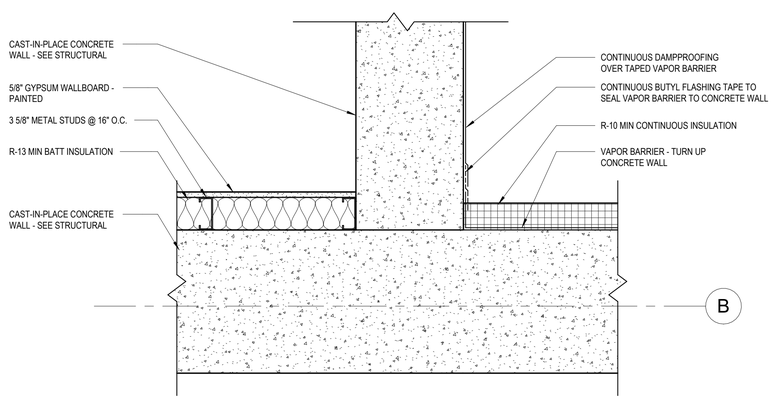

6 PC-A503 PLAN DETAIL @ CONCRETE WALL
1 1/2" = 1'-0"

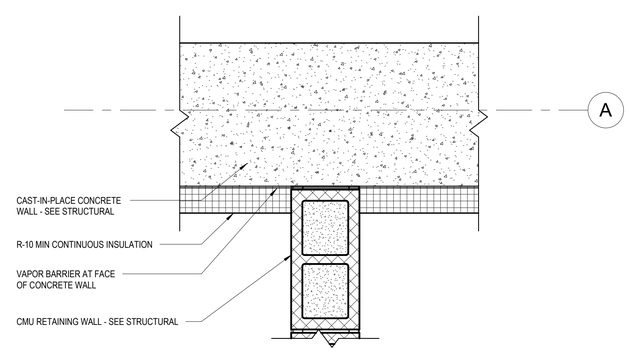

7 PC-A503 PLAN DETAIL @ CRAWLSPACE WALL
1 1/2" = 1'-0"

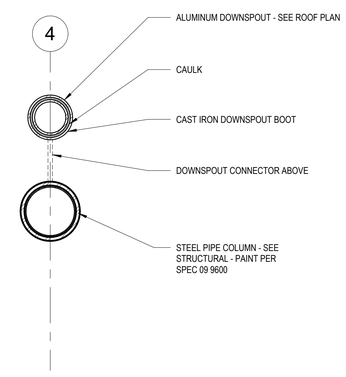

8 PC-A503 PLAN DETAIL @ DOWNSPOUT BOOT
1 1/2" = 1'-0"

Susan Hatchell
Landscape Architecture, PLLC
711 W. North Street, Raleigh, NC 27603
p: 919-838-9600 f: 919-838-9700

Esse Architects
832 PERSHING ROAD | RALEIGH, NORTH CAROLINA 27608

PLAN DETAILS

LAKE MYRA COUNTY PARK
Wake County, NC

REVISIONS

Esse Architects P.A. Registered Architectural Corporation 52498 North Carolina Raleigh, NC

MIRANDA DOWNER POTTHOFF Registered Architect 11663 Signed by: Miranda Potthoff 1EC04558BE284B6... North Carolina Raleigh, NC 7/27/2026

Date: 07/27/26

PC-A503

Docusign Envelope ID: 8BDE9837-570C-8E6A-8205-A6B2A1B21988

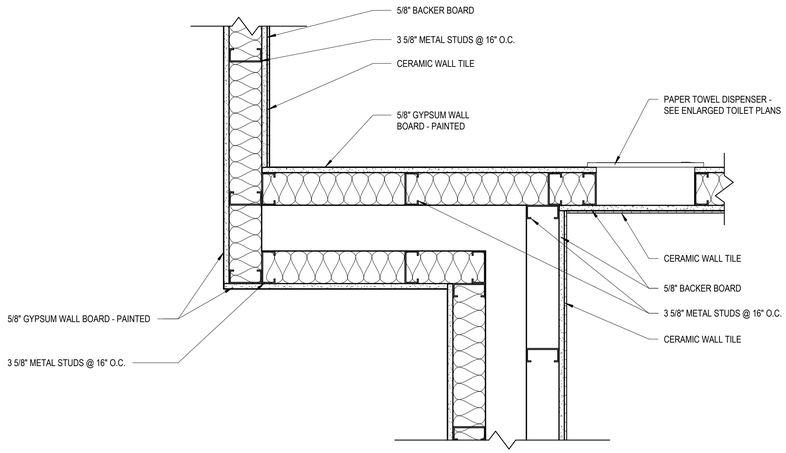

1 PC-A504 PLAN DETAIL @ SHARED FLEX SPACE AND WELLNESS
1 1/2" = 1'-0"

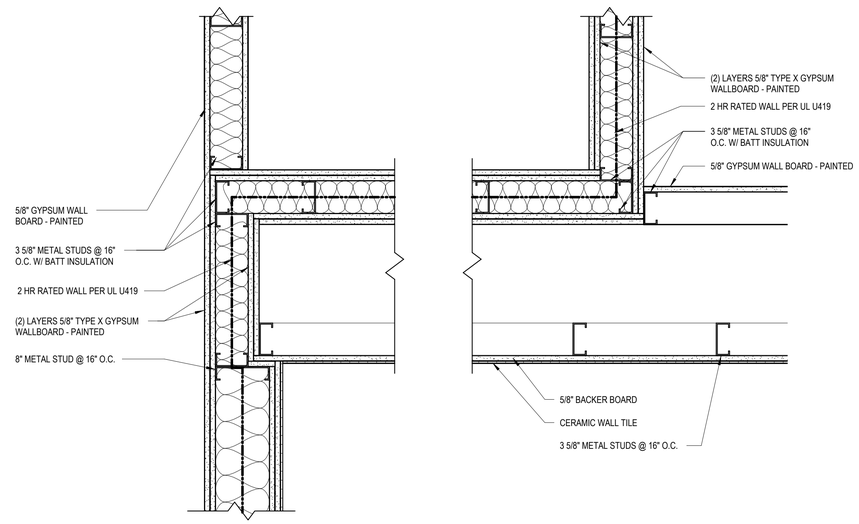

2 PC-A504 PLAN DETAIL @ FAMILY RESTROOM CHASE
1 1/2" = 1'-0"

Susan Hatchell
Landscape Architecture, PLLC
711 W. North Street, Raleigh, NC 27603
p: 919-838-9600 f: 919-838-9700

Esse Architects
632 PERSHING ROAD | RALEIGH, NORTH CAROLINA 27608

PLAN DETAILS

LAKE MYRA COUNTY PARK
Wake County, NC

Esse Architects P.A.
Registered Architectural Corporation
52498
North Carolina
Raleigh, NC

MIRANDA DOWNER POTTHOFF
Registered Architect
11603
Miranda Potthoff
1ECD4B8C6D8486...
North Carolina
Raleigh, NC
7/27/2026

REVISIONS

Date: 07/27/26

PC-A504

Docusign Envelope ID: 8BDE9837-570C-8E6A-8205-A6B2A1B21988

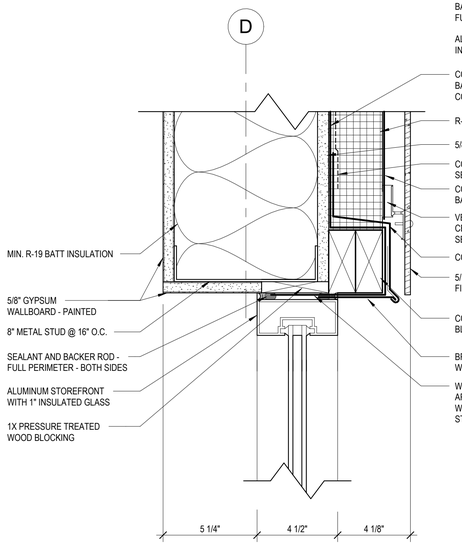

1 PC-A505 AIR BARRIER DETAIL @ WINDOW HEAD
3" = 1'-0"

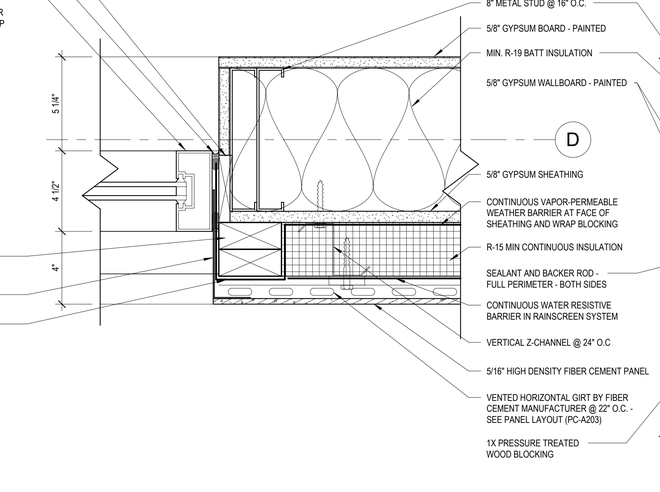

2 PC-A505 AIR BARRIER DETAIL @ WINDOW JAMB
3" = 1'-0"

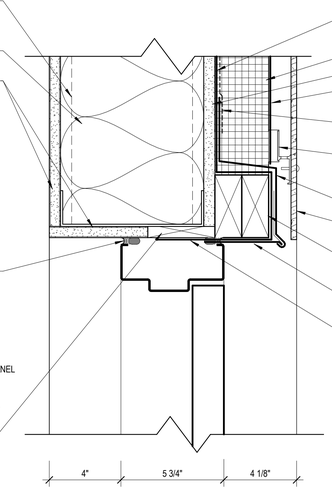

3 PC-A505 AIR BARRIER DETAIL @ HM DOOR HEAD
3" = 1'-0"

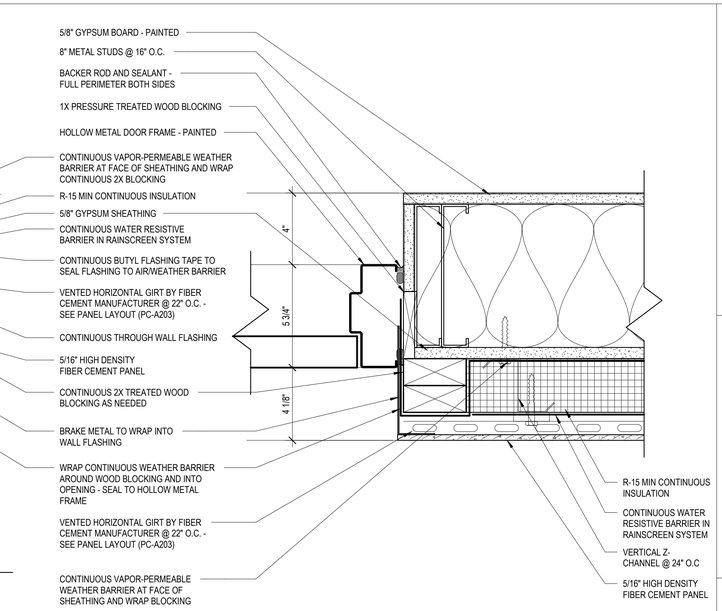

4 PC-A505 AIR BARRIER DETAIL @ HM DOOR JAMB
3" = 1'-0"

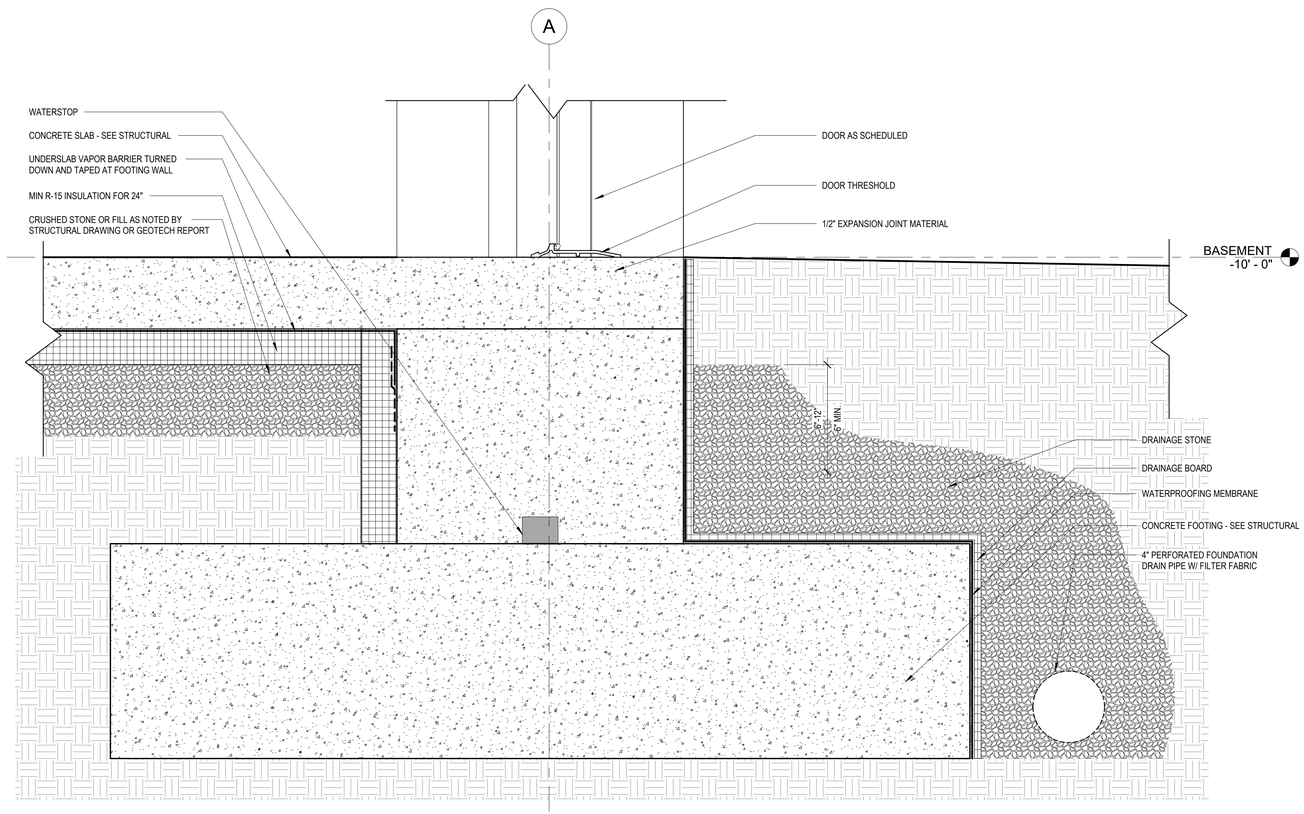

5 PC-A505 AIR BARRIER DETAIL @ BASEMENT DOOR
3" = 1'-0"

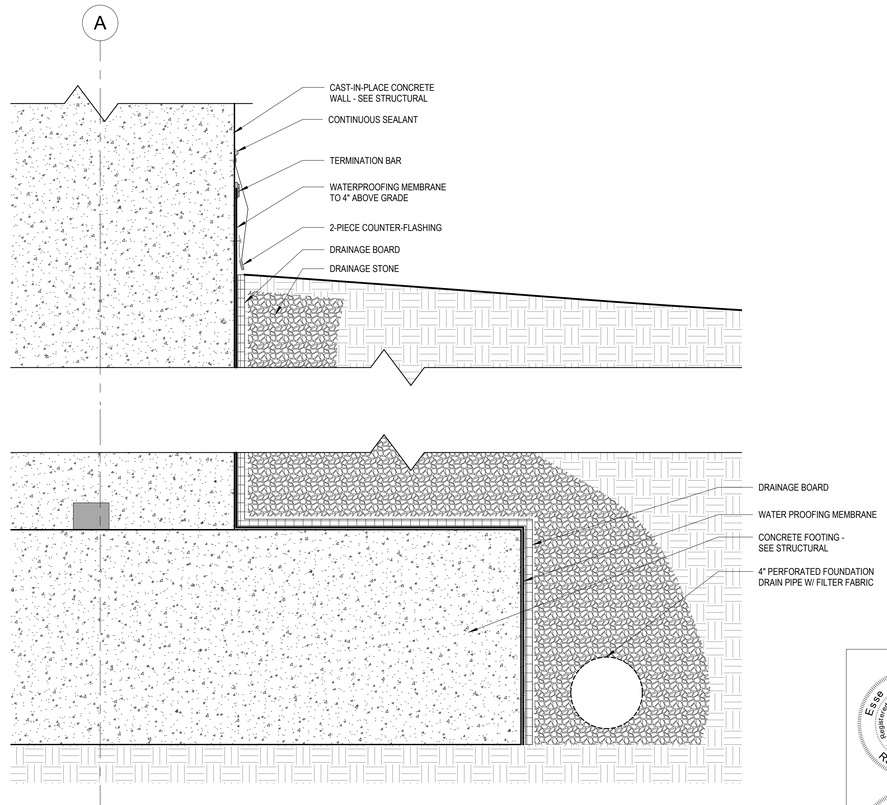

6 PC-A505 AIR BARRIER DETAIL @ GRADE
3" = 1'-0"

Susan Hatchell
Landscape Architecture, PLLC
711 W. North Street, Raleigh, NC 27603
p: 919-838-9600 f: 919-838-9700

Esse Architects
832 PERSHING ROAD | RALEIGH, NORTH CAROLINA 27608

AIR BARRIER DETAILS

LAKE MYRA COUNTY PARK
Wake County, NC

REVISIONS

Esse Architects P.A.
Registered Architectural Corporation
52498
North Carolina
Raleigh, NC

MIRANDA DOWNER POTTHOFF
Registered Architect
11863
Signature
Miranda Potthoff
1EC84548B62B4B4...
North Carolina
Raleigh, NC
7/27/2026

Date: 07/27/26

PC-A505

Docusign Envelope ID: 8BDE9837-570C-8E6A-8205-A6B2A1B21988

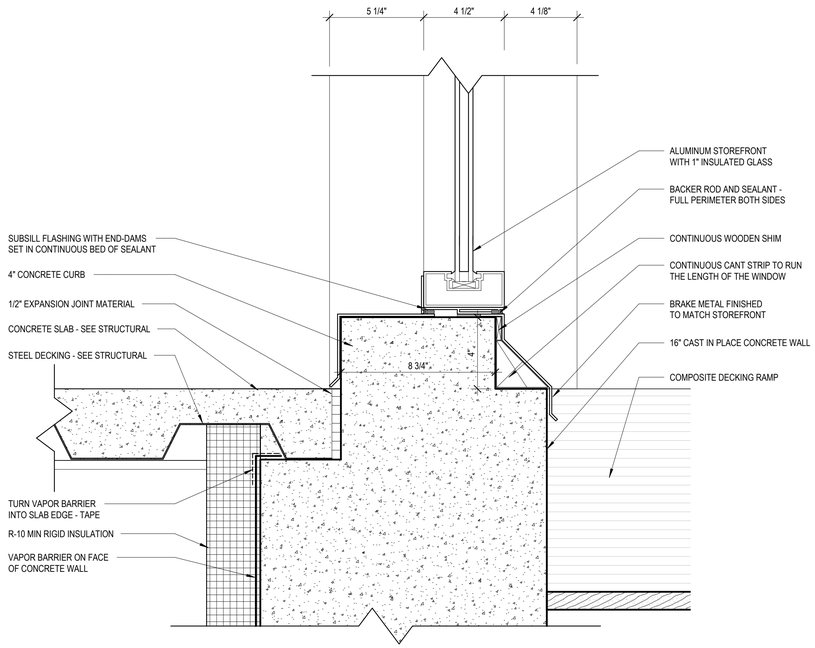

1 PC-A506 ENLARGED CURB DETAIL @ TYP. STOREFRONT
3" = 1'-0"

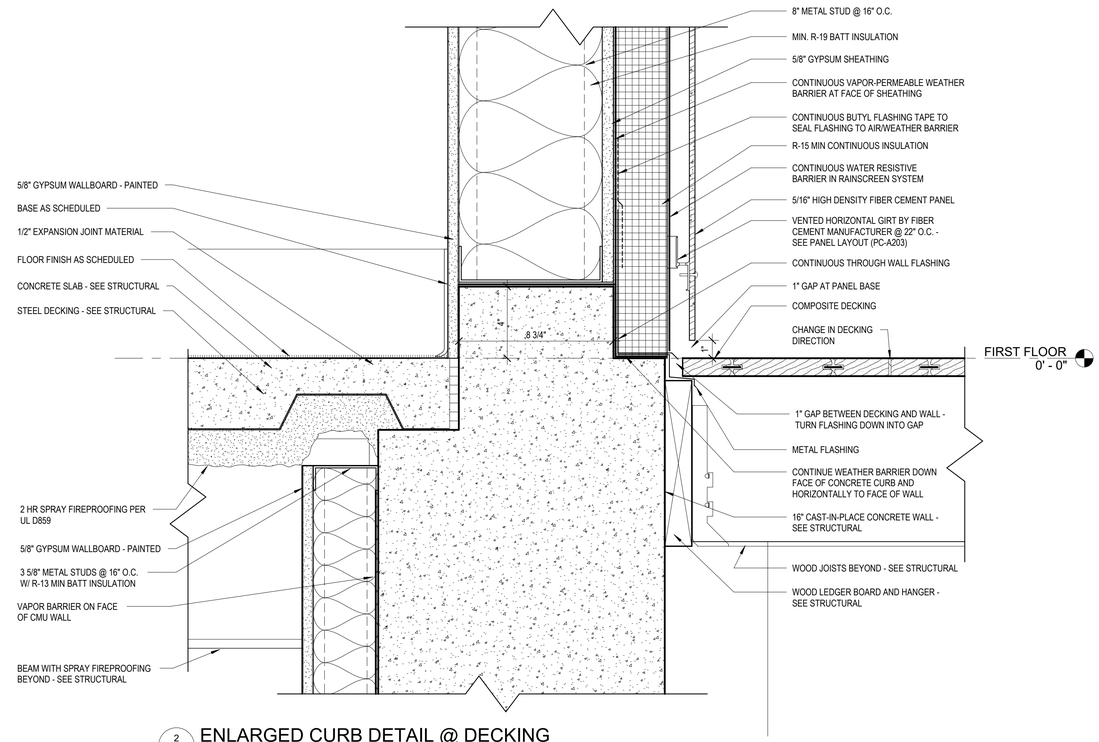

2 PC-A506 ENLARGED CURB DETAIL @ DECKING
3" = 1'-0"

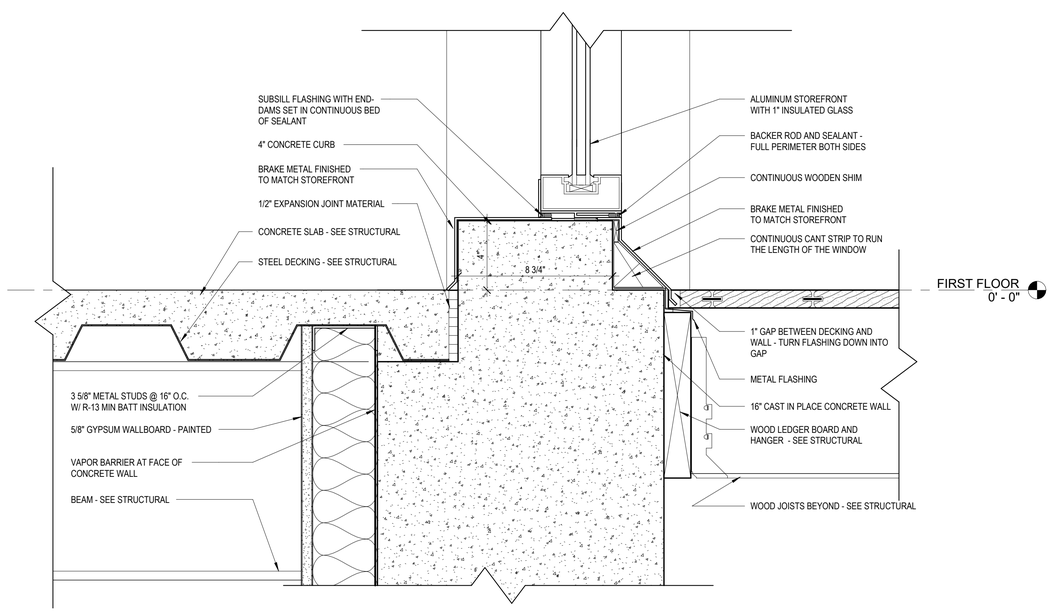

3 PC-A506 ENLARGED CURB DETAIL @ STOREFRONT AND DECKING
3" = 1'-0"

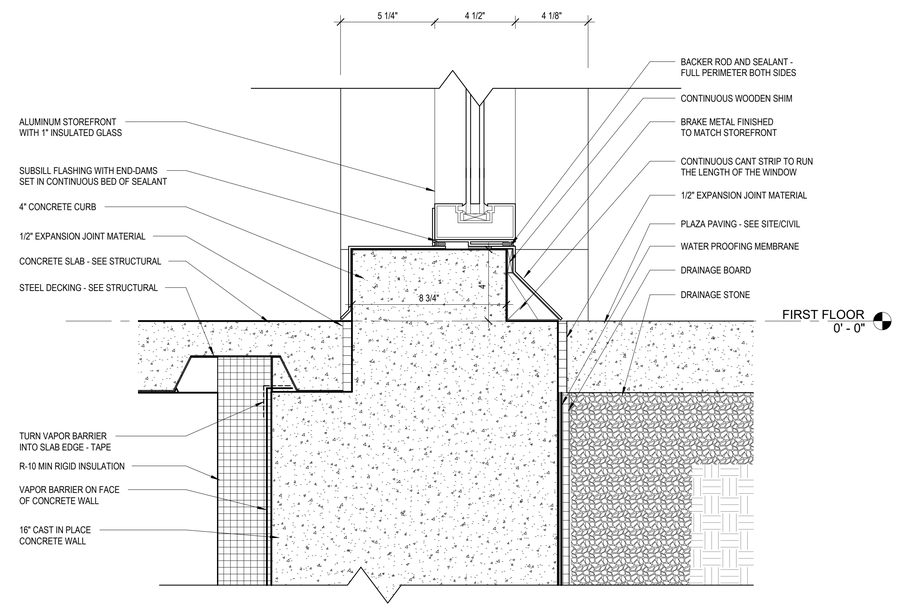

4 PC-A506 ENLARGED CURB DETAIL @ STOREFRONT AND CONCRETE
3" = 1'-0"

Susan Hatchell
Landscape Architecture, PLLC
711 W. North Street, Raleigh, NC 27603
p: 919-838-9600 f: 919-838-9700

Esse Architects
832 PERSHING ROAD | RALEIGH, NORTH CAROLINA 27608

AIR BARRIER DETAILS

LAKE MYRA COUNTY PARK
Wake County, NC

REVISIONS

Esse Architects P.A. Registered Architectural Corporation 52498 North Carolina Raleigh, NC

MIRANDA DONNER ROTHFORF Registered Architect 11863 Signed by: Miranda Rothfor 7/27/2026 Raleigh, NC

Date: 07/27/26

PC-A506

Docusign Envelope ID: 8BDE9837-570C-8E6A-8205-A6B2A1B21988

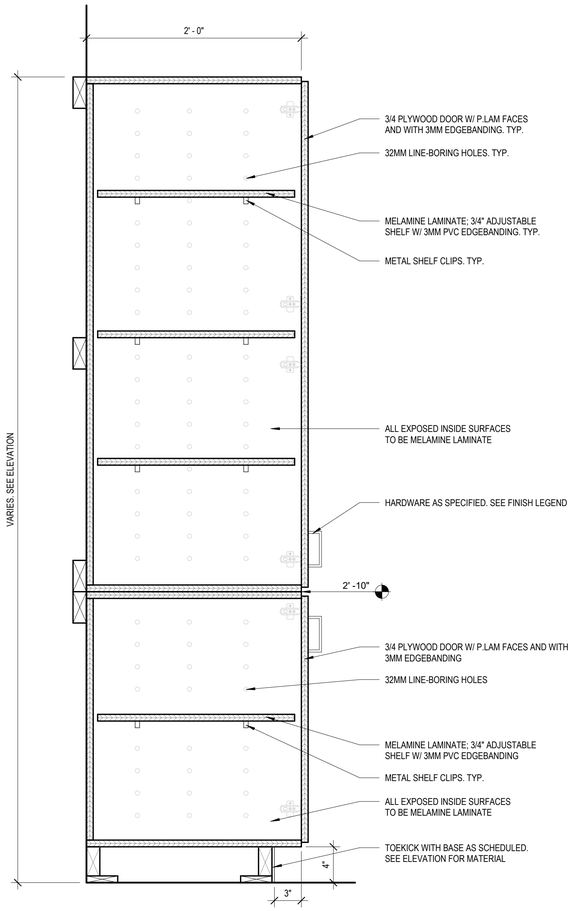

1 PC-A510 TYP. PANTRY W/ ADJUSTABLE SHELVING (CW01)
1 1/2" = 1'-0"

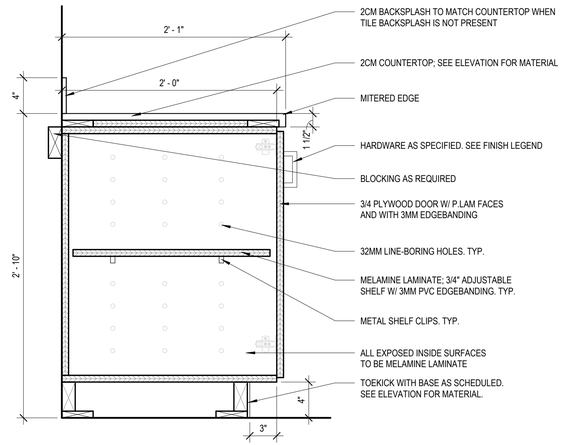

2 PC-A510 TYP. BASE CABINET W/ ADJUSTABLE SHELVING (CW02)
1 1/2" = 1'-0"

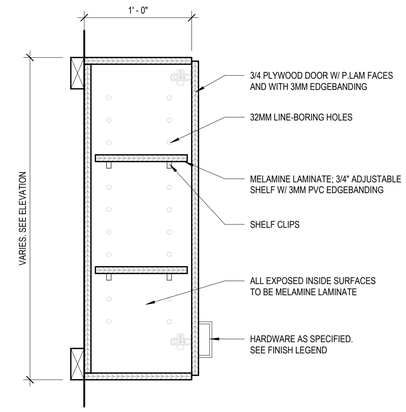

3 PC-A510 TYP. UPPER CABINET W/ SHELVING (CW07)
1 1/2" = 1'-0"

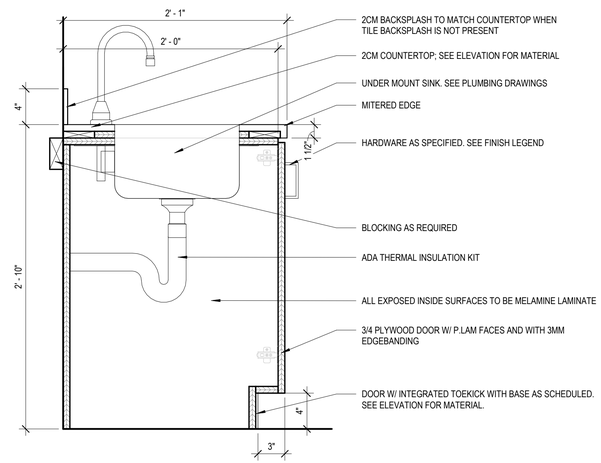

4 PC-A510 TYP. SINK W/ INTEGRATED TOE KICK (CW03)
1 1/2" = 1'-0"

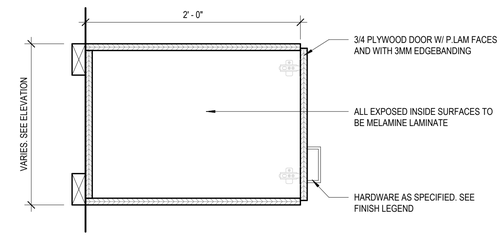

5 PC-A510 TYP. UPPER CABINET @ REFRIGERATOR (CW06)
1 1/2" = 1'-0"

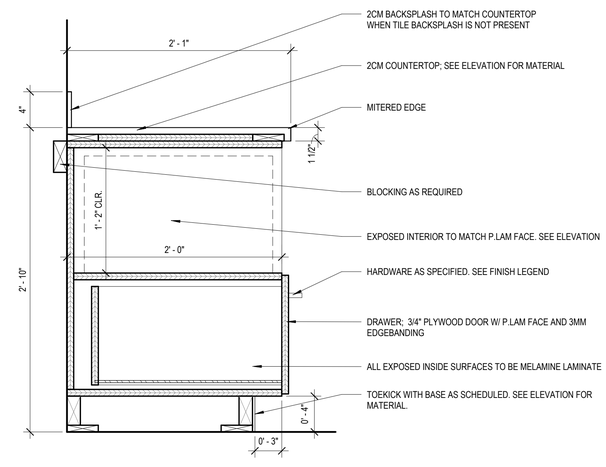

6 PC-A510 TYP. BASE CABINET W/ MICROWAVE SHELF
1 1/2" = 1'-0"

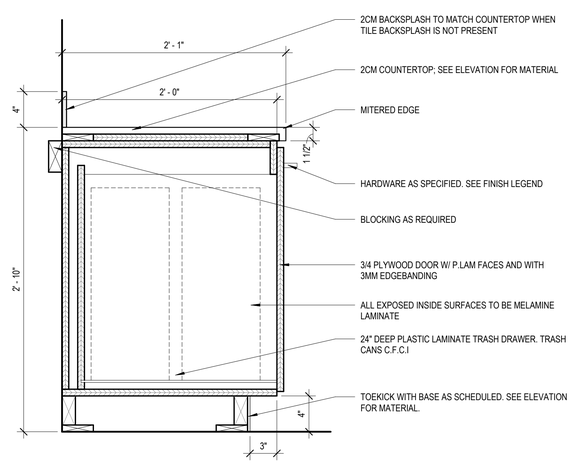

7 PC-A510 TYP. BASE CABINET W/ PULL OUT TRASH & RECYCLING (CW05)
1 1/2" = 1'-0"

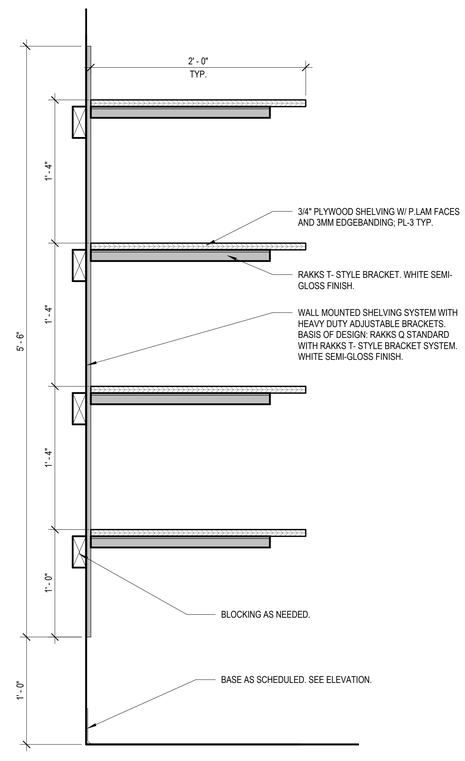

8 PC-A510 TYP. ADJUSTABLE SHELVING SYSTEM
1 1/2" = 1'-0"

Susan Hatchell
Landscape Architecture, PLLC
711 W. North Street, Raleigh, NC 27603
p: 919-838-9600 f: 919-838-9700

Esse Architects
832 PERSHING ROAD | RALEIGH, NORTH CAROLINA 27608

MILLWORK DETAILS

LAKE MYRA COUNTY PARK
Wake County, NC

REVISIONS

Esse Architects P.A. Registered Architectural Corporation 52498 North Carolina Raleigh, NC

MIRANDA DONNER POTTHOFF Registered Architect 11663 Miranda Potthoff 7/27/2026 North Carolina Raleigh, NC

Date: 07/27/26

PC-A510

Docusign Envelope ID: 8BDE9837-570C-8E6A-8205-A6B2A1B21988

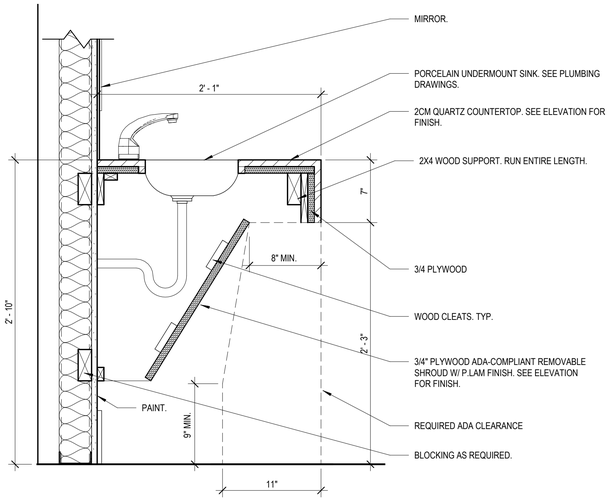

1 PC-A511 TYP. RESTROOM LAVATORY SECTION @ SINK
1 1/2" = 1'-0"

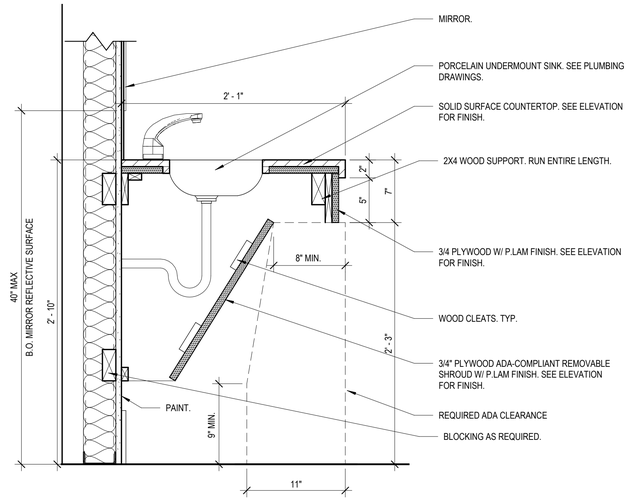

2 PC-A511 TYP. WELLNESS ROOM ADA SINK
1 1/2" = 1'-0"

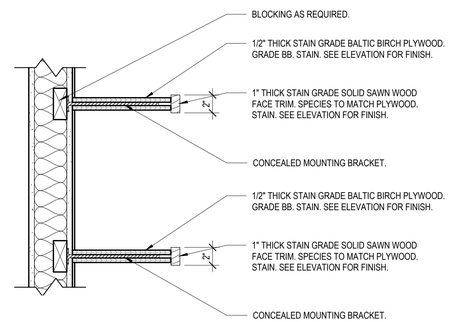

5 PC-A511 DETAIL - FLOATING SHELVING
1 1/2" = 1'-0"

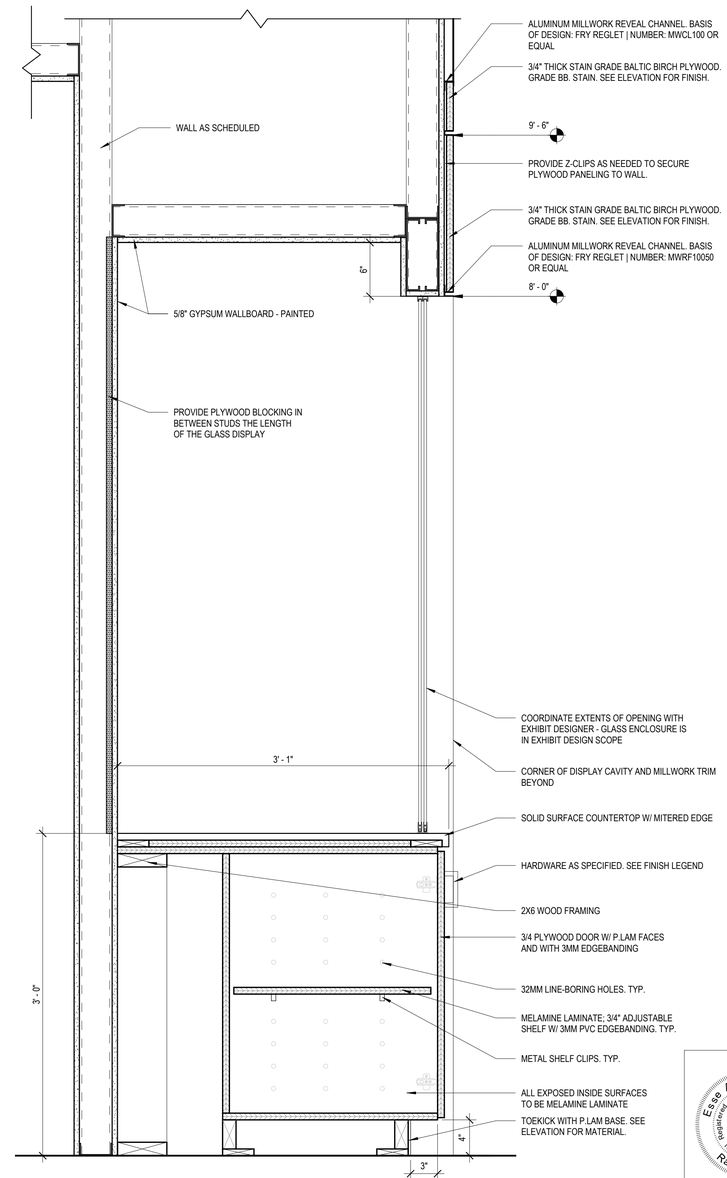

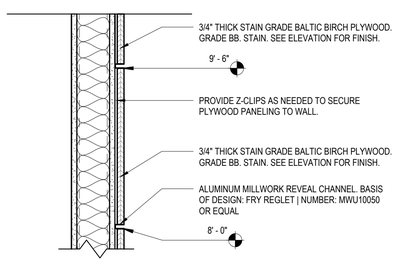

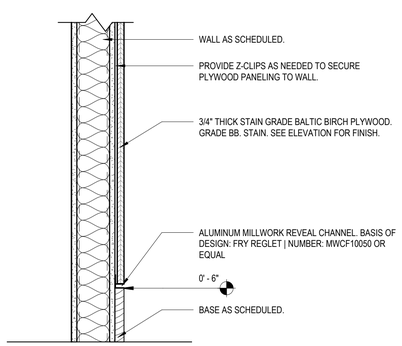

3 PC-A511 DETAIL - WOOD WALL PANELING
1 1/2" = 1'-0"

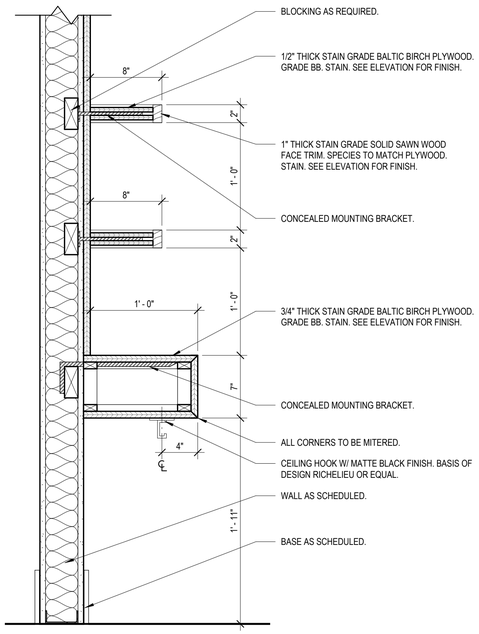

4 PC-A511 DETAIL - WELCOME DESK W/ INTEGRATED SHELVING
1 1/2" = 1'-0"

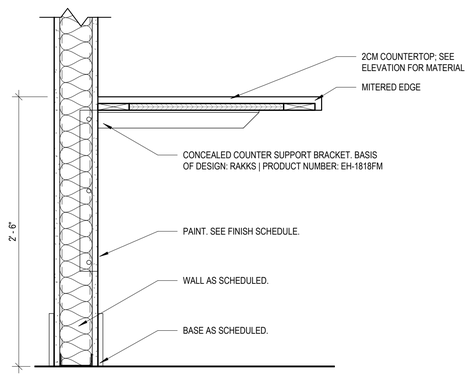

6 PC-A511 DETAIL - FLOATING WOOD COUNTERTOP
1 1/2" = 1'-0"

7 PC-A511 MILLWORK DETAIL @ DISPLAY
1 1/2" = 1'-0"

Susan Hatchell
Landscape Architecture, PLLC
711 W. North Street, Raleigh, NC 27603
p: 919-838-9600 f: 919-838-9700

Esse Architects
632 PERSHING ROAD | RALEIGH, NORTH CAROLINA 27608

INTERIOR DETAILS

LAKE MYRA COUNTY PARK
Wake County, NC

REVISIONS

Esse Architects, P.A. Registered Architectural Corporation 52498 North Carolina Raleigh, NC

MIRANDA DONNER POTHOFF Registered Architect 11663 North Carolina Raleigh, NC 7/27/2026

Date: 07/27/26

PC-A511

Docusign Envelope ID: 8BDE9837-570C-8E6A-8205-A6B2A1B21988

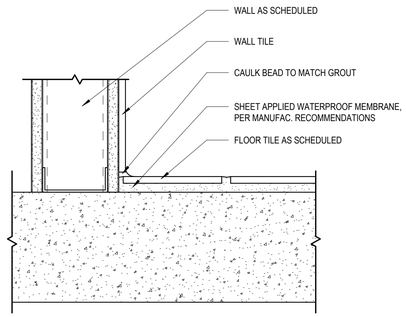

1 PC-A512 TYP. FLOOR TO WALL TILE TRANSITION
3" = 1'-0"

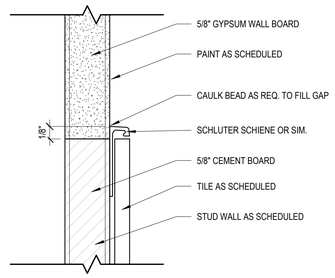

2 PC-A512 TYP. MID-WALL TILE TERMINATION
12" = 1'-0"

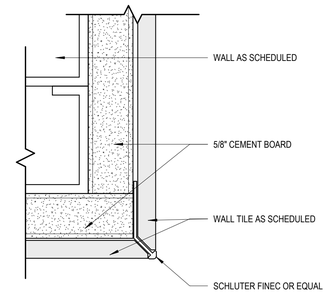

3 PC-A512 TYP. WALL TILE OUTSIDE CORNER
12" = 1'-0"

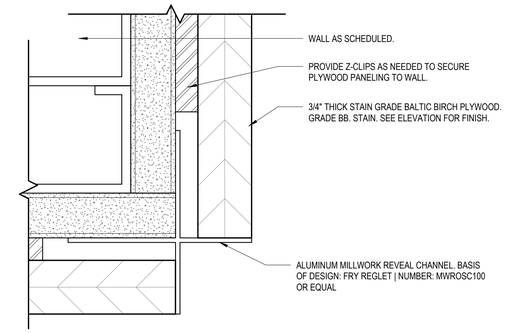

4 PC-A512 WOOD PANEL OUTSIDE CORNER
12" = 1'-0"

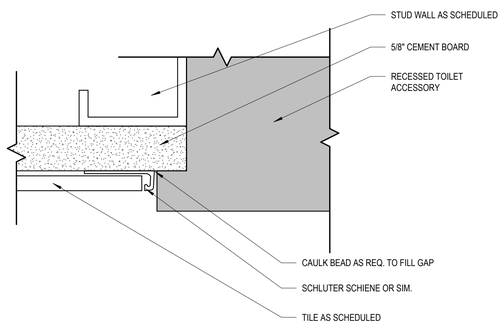

5 PC-A512 TYP. TILE TERMINATION @ TOILET ACCESSORY
12" = 1'-0"

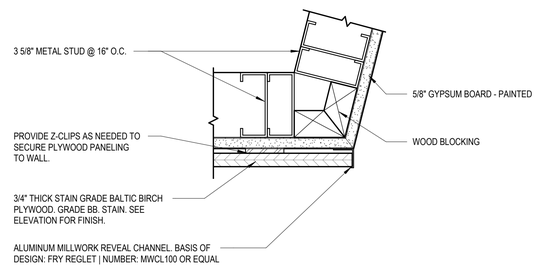

6 PC-A512 WOOD PANEL OUTSIDE CORNER @ ANGLED WALL
3" = 1'-0"

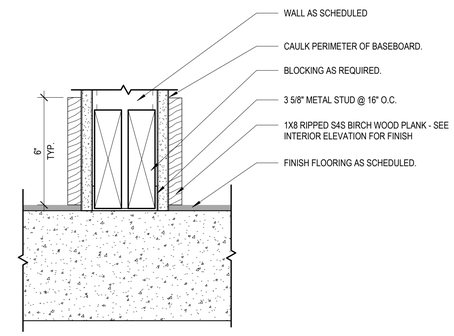

7 PC-A512 TYP. WOOD BASE DETAIL
3" = 1'-0"

Susan Hatchell
Landscape Architecture, PLLC
711 W. North Street, Raleigh, NC 27603
p: 919-838-9600 f: 919-838-9700

Esse Architects
632 PERSHING ROAD | RALEIGH, NORTH CAROLINA 27608

INTERIOR DETAILS

LAKE MYRA COUNTY PARK
Wake County, NC

REVISIONS

Esse Architects P.A. Registered Architectural Corporation 52498 North Carolina Raleigh, NC

MIRANDA DONNER ROTHOFF Registered Architect 17663 North Carolina Raleigh, NC
Miranda Rothoff
DocuSign Envelope ID: 1EC84B8B-C524B4
7/27/2026

Date: 07/27/26

PC-A512

Docusign Envelope ID: 8BDE9837-570C-8E6A-8205-A6B2A1B21988

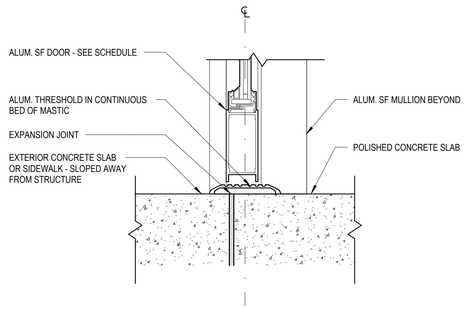

1 PC-A513 EXT. PAVING TO INT. CONCRETE @ STOREFRONT
3" = 1'-0"

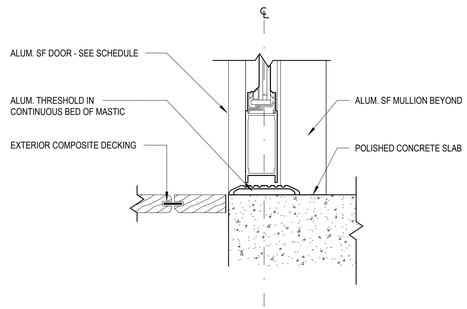

2 PC-A513 EXT. DECKING TO INT. CONCRETE @ STOREFRONT
3" = 1'-0"

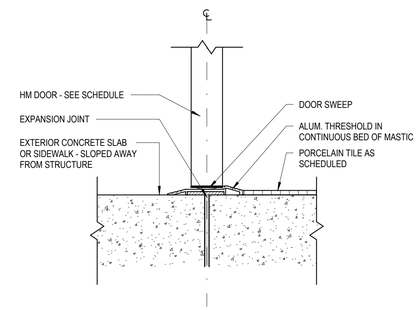

3 PC-A513 EXT. PAVING TO INT. TILE @ HM DOOR
3" = 1'-0"

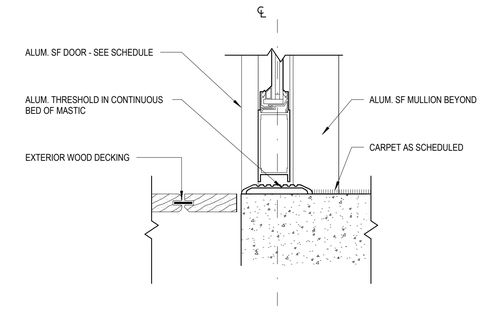

4 PC-A513 EXT. DECKING TO INT. CARPET @ STOREFRONT
3" = 1'-0"

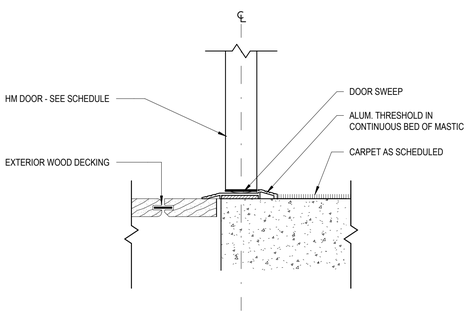

5 PC-A513 EXT. DECKING TO INT. CARPET @ HM DOOR
3" = 1'-0"

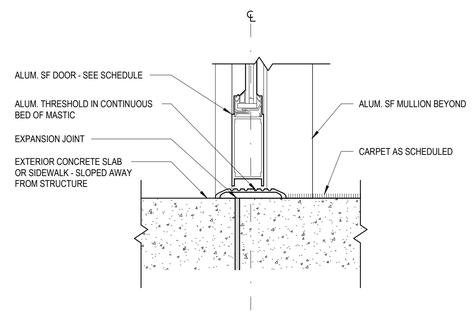

6 PC-A513 EXT. PAVING TO INT. CARPET @ STOREFRONT
3" = 1'-0"

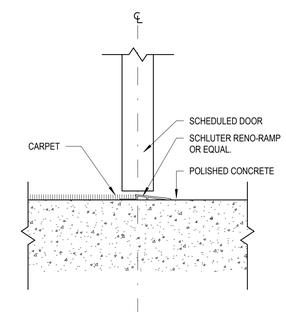

7 PC-A513 INT. TRANSITION - CARPET TO CONCRETE
3" = 1'-0"

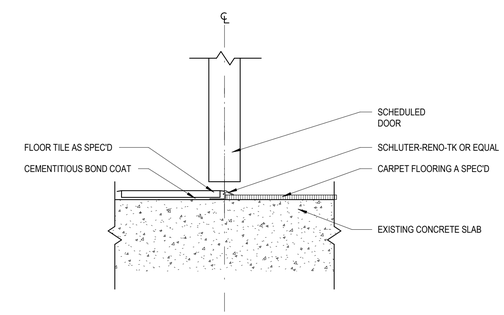

8 PC-A513 INT. TRANSITION - CARPET TO TILE
3" = 1'-0"

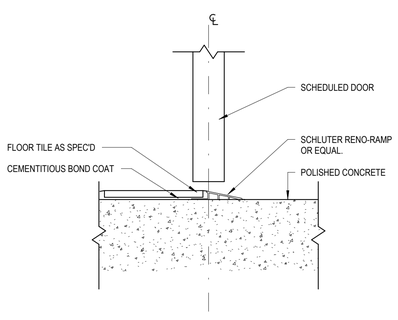

9 PC-A513 INT. TRANSITION - CONCRETE TO TILE
3" = 1'-0"

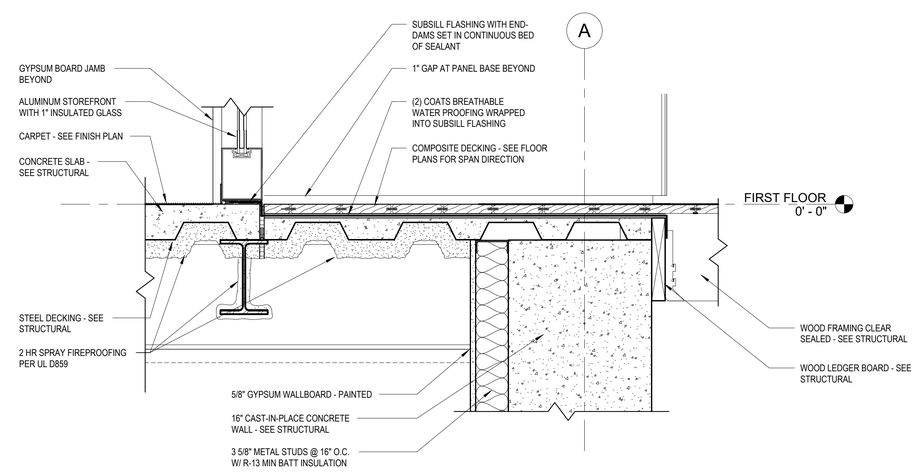

10 PC-A513 WATERPROOFING TRANSITION DETAIL @ CLASSROOMS
1 1/2" = 1'-0"

Susan Hatchell
Landscape Architecture, PLLC
711 W. North Street, Raleigh, NC 27603
p: 919-838-9600 f: 919-838-9700

Esse Architects
632 PERSHING ROAD | RALEIGH, NORTH CAROLINA 27608

TRANSITION DETAILS

LAKE MYRA COUNTY PARK
Wake County, NC

REVISIONS

Esse Architects P.A. Registered Architectural Corporation 52498 North Carolina Raleigh, NC

MIRANDA DONNER POTTHOFF Registered Architect 11663 Miranda Potthoff Reg. No. 1EC-0445-0026484 North Carolina Raleigh, NC 7/27/2026

Date: 07/27/26

PC-A513

Docusign Envelope ID: 8BDE9837-570C-8E6A-8205-A6B2A1B21988

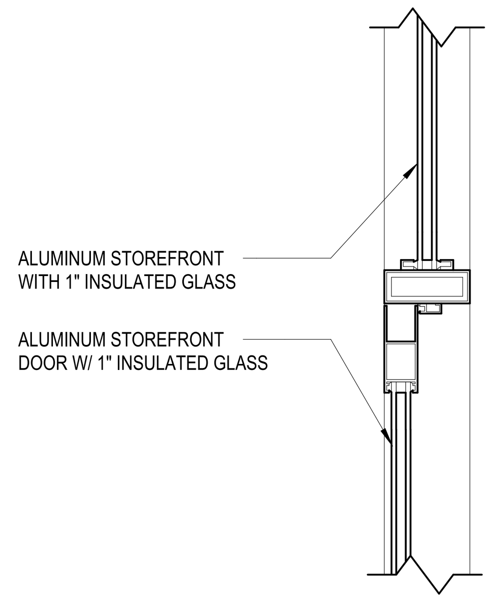

1 PC-A521 HEAD DETAIL @ EXT. STOREFRONT
1 1/2" = 1'-0"

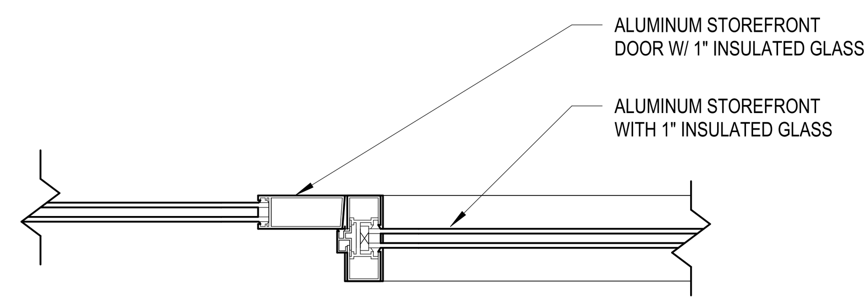

2 PC-A521 JAMB DETAIL @ EXT. STOREFRONT
1 1/2" = 1'-0"

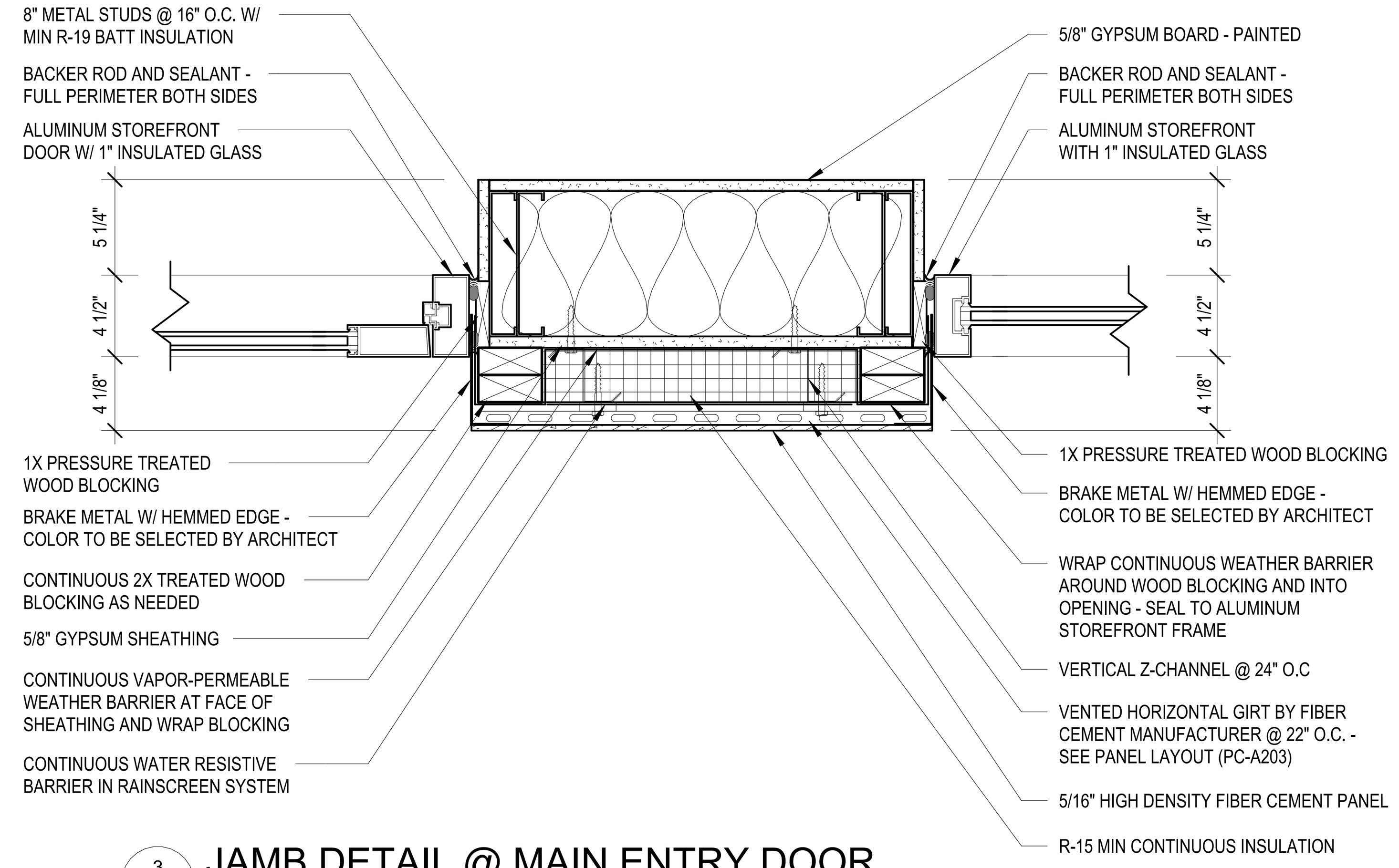

3 PC-A521 JAMB DETAIL @ MAIN ENTRY DOOR
1 1/2" = 1'-0"

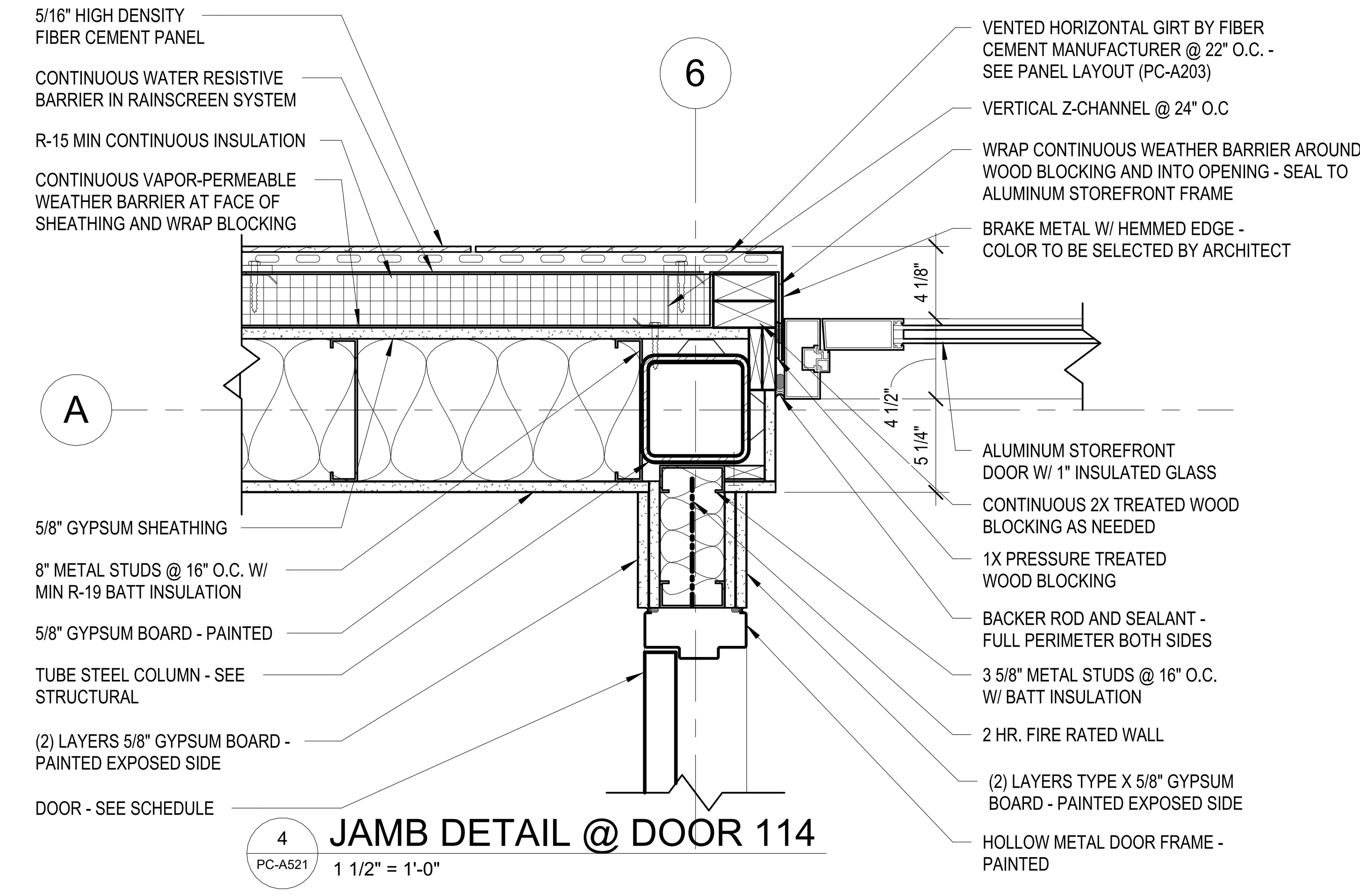

4 PC-A521 JAMB DETAIL @ DOOR 114
1 1/2" = 1'-0"

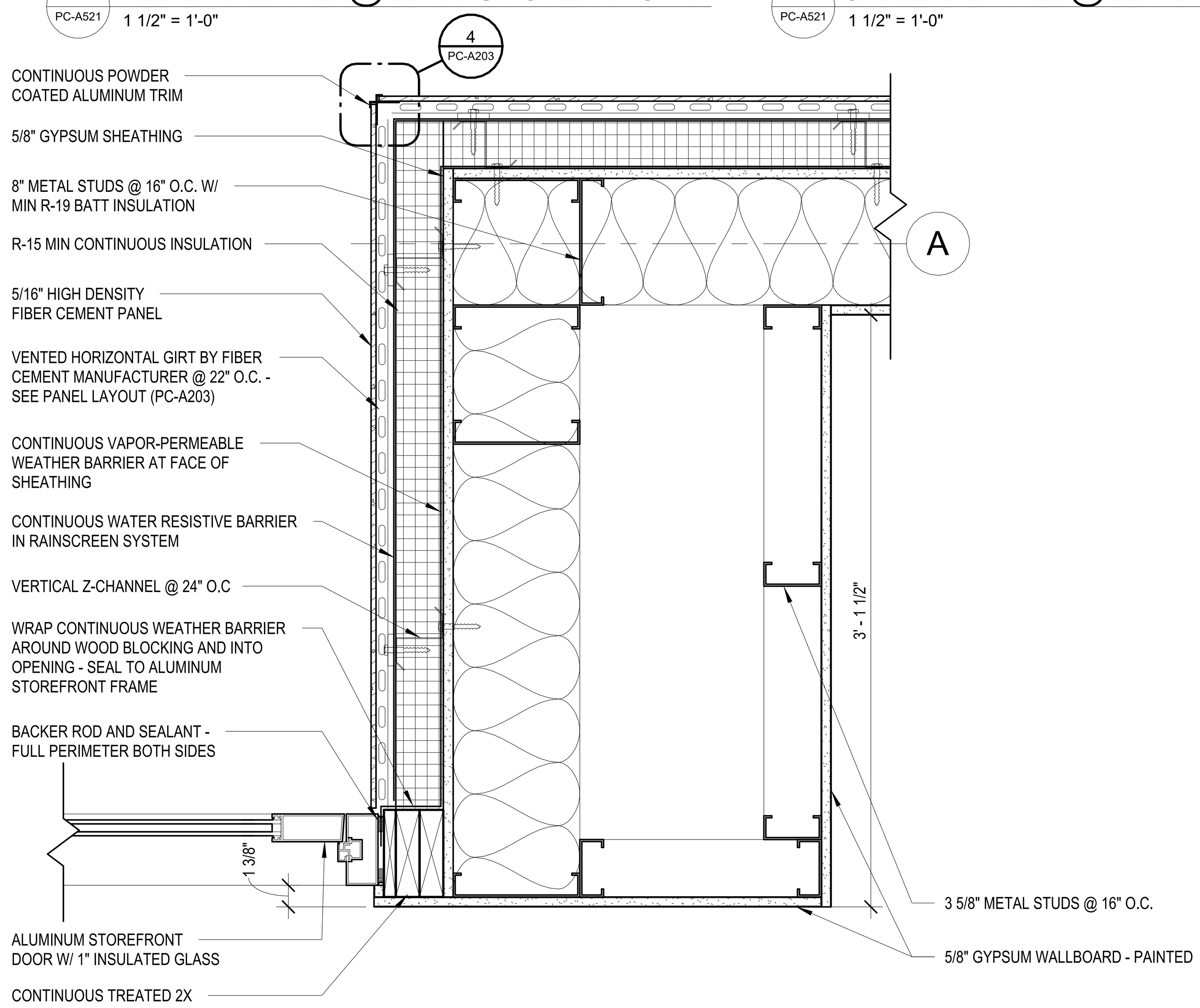

5 PC-A521 JAMB DETAIL @ CLASSROOM DOOR
1 1/2" = 1'-0"

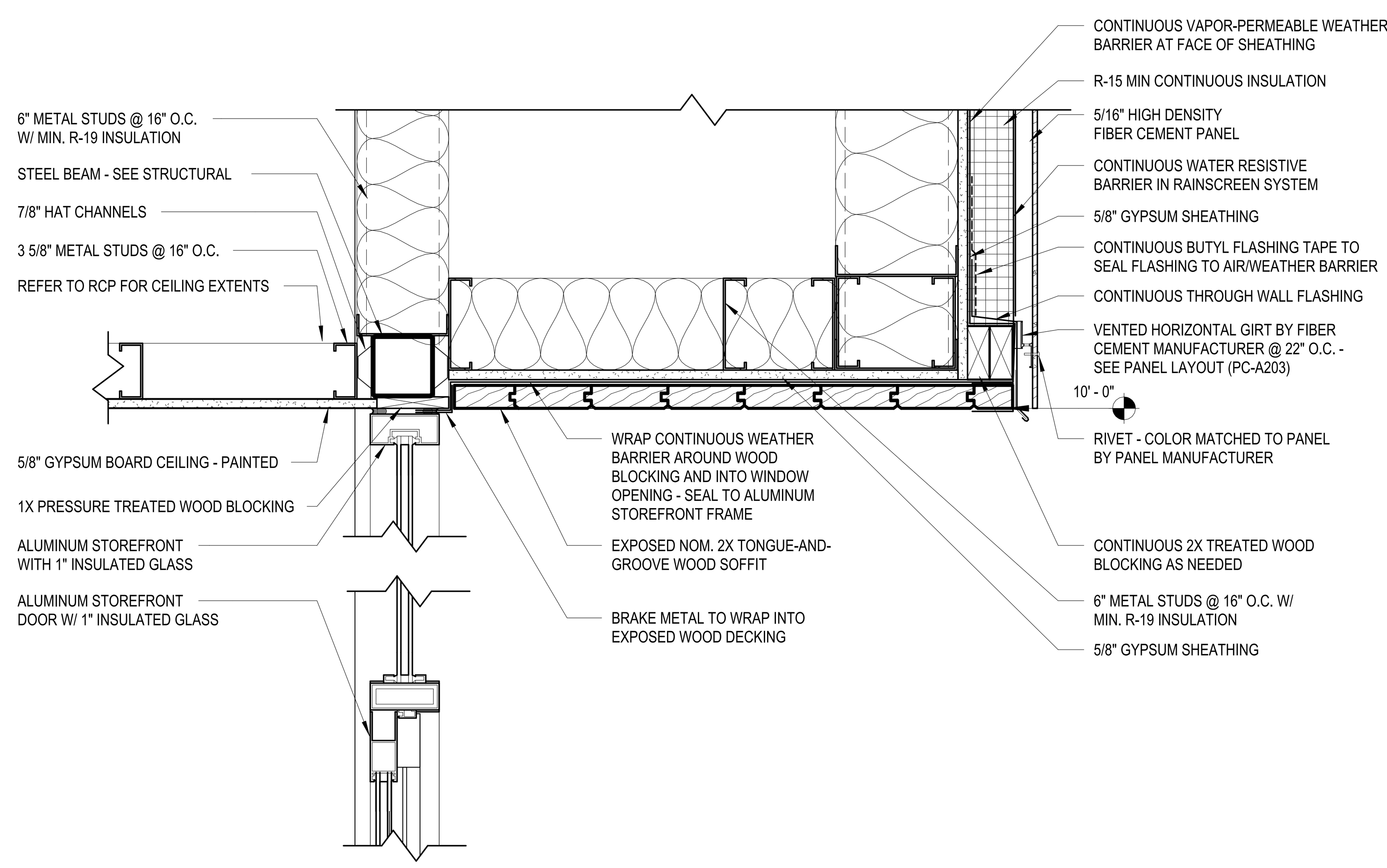

6 PC-A521 HEAD DETAIL @ CLASSROOM W/ SOFFIT
1 1/2" = 1'-0"

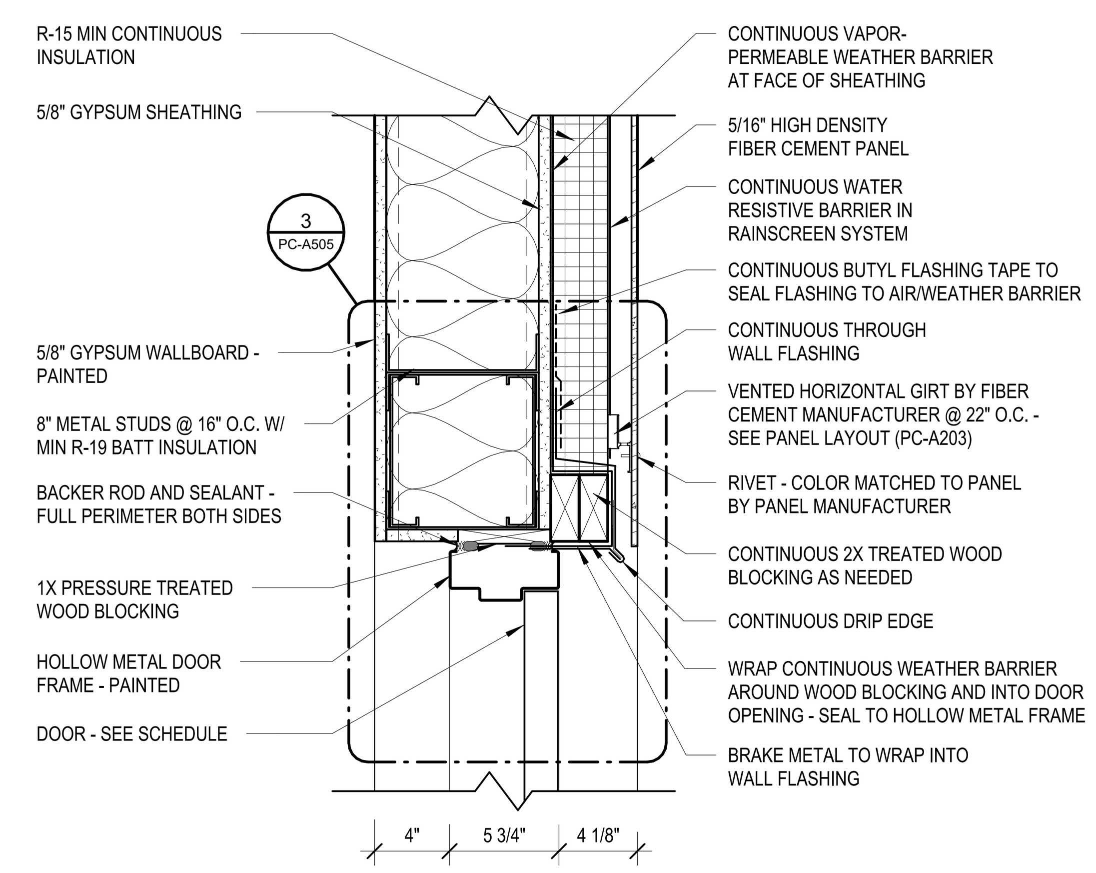

7 PC-A521 HEAD DETAIL @ EXT. DOOR
1 1/2" = 1'-0"

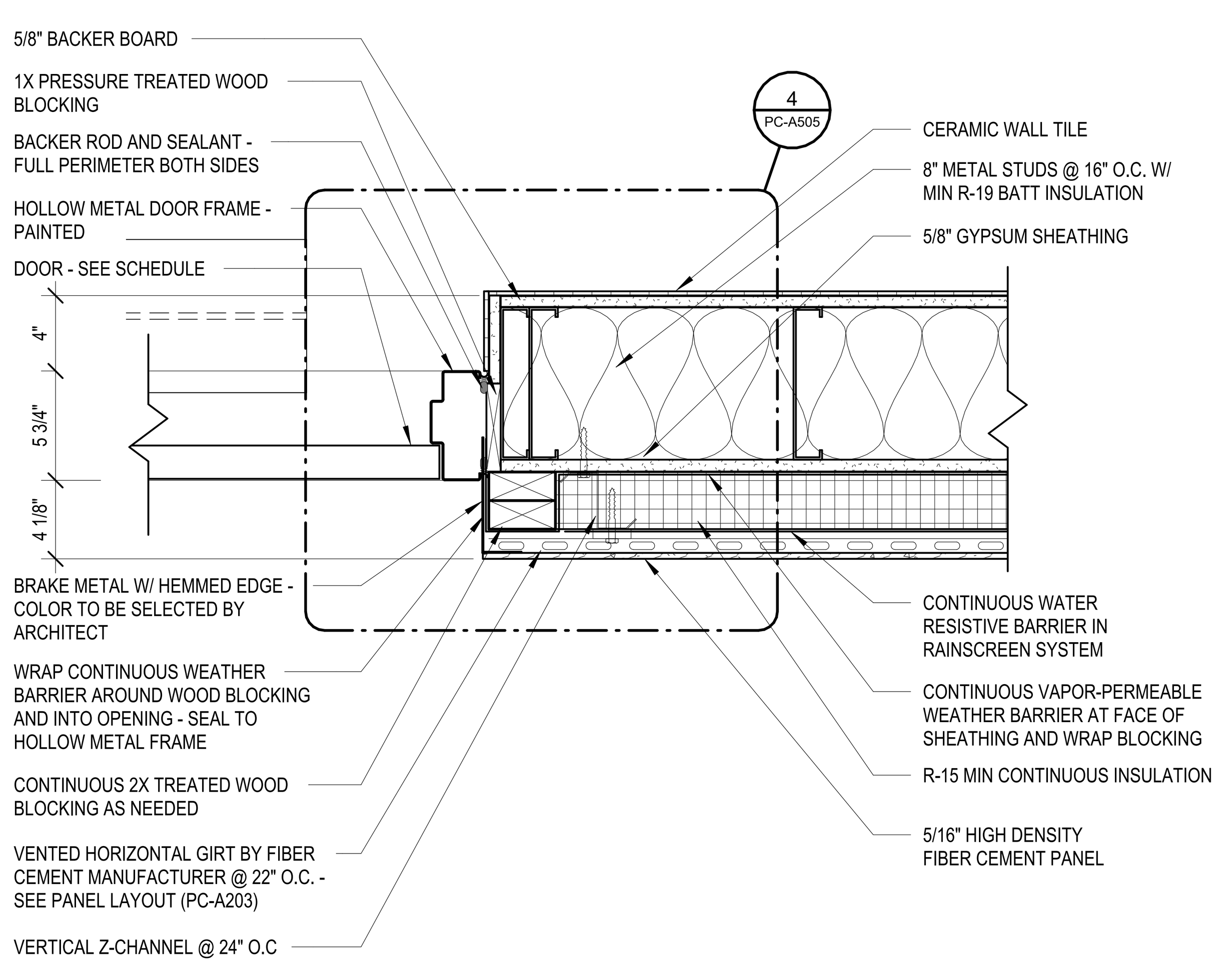

8 PC-A521 JAMB DETAIL @ EXT. RESTROOM DOOR
1 1/2" = 1'-0"

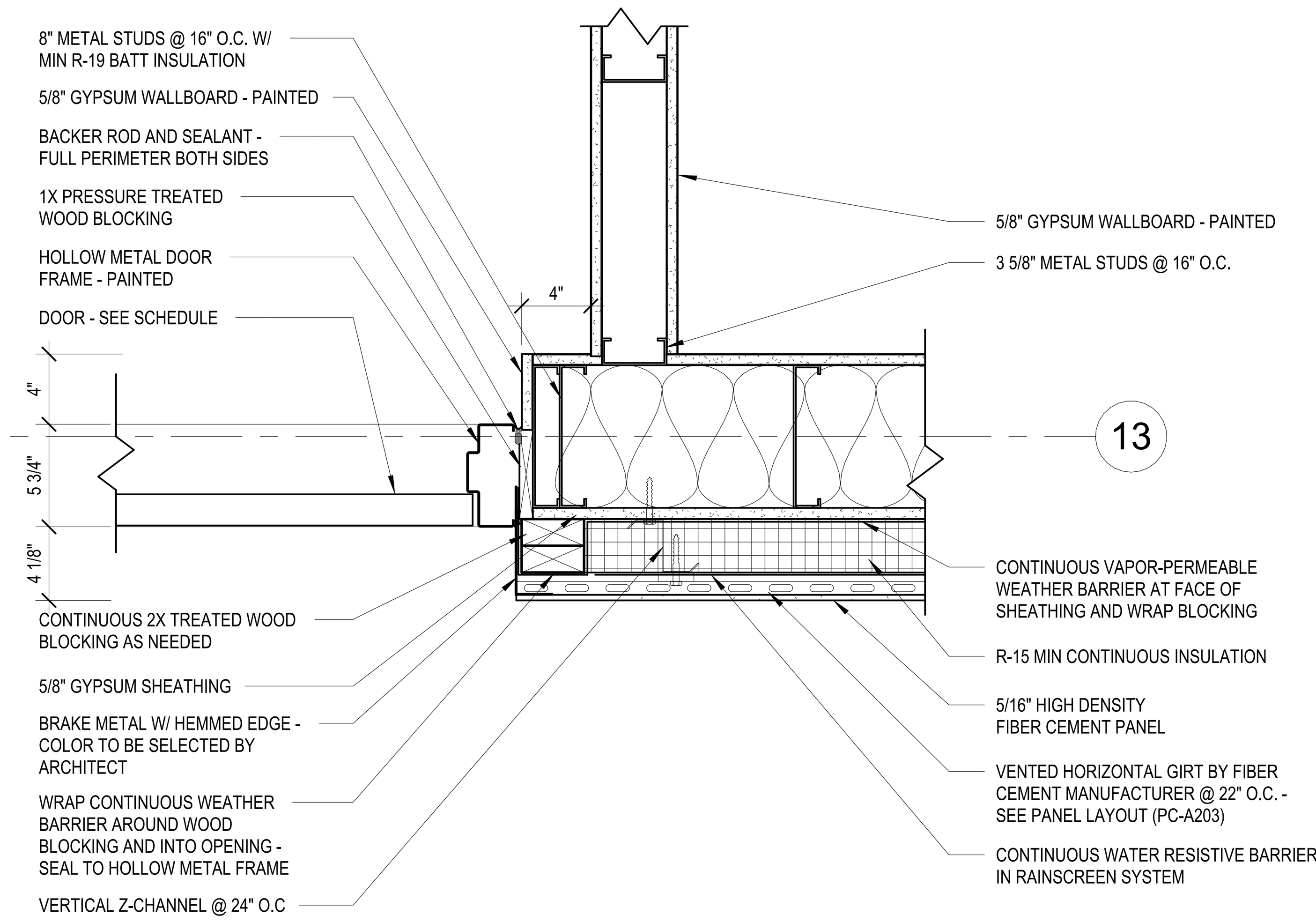

9 PC-A521 JAMB DETAIL @ ADMIN DECK
1 1/2" = 1'-0"

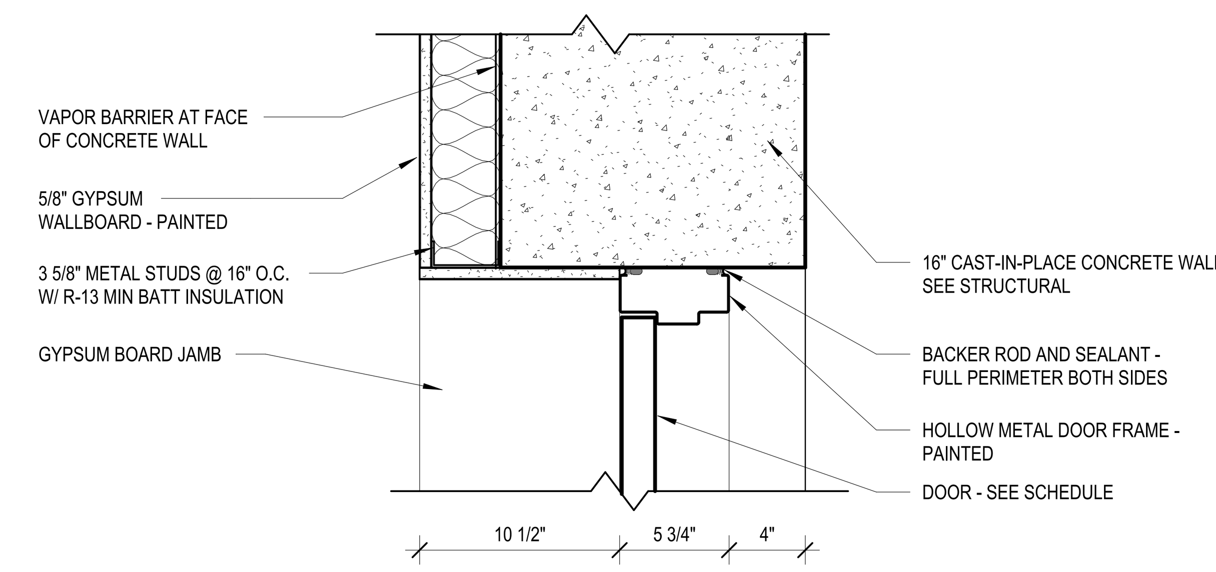

10 PC-A521 HEAD DETAIL @ EXT. BASEMENT DOOR
1 1/2" = 1'-0"

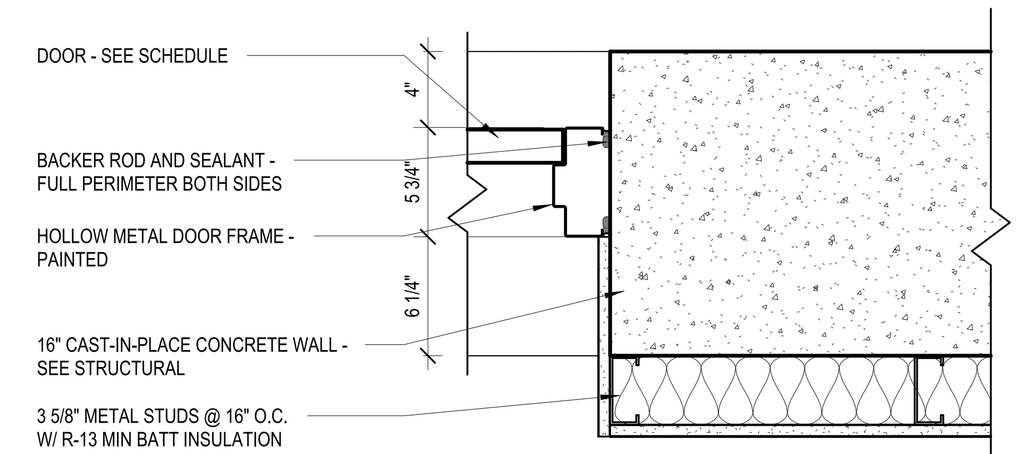

11 PC-A521 JAMB DETAIL @ EXT. BASEMENT DOOR
1 1/2" = 1'-0"

Susan Hatchell Landscape Architecture, PLLC
711 W. North Street, Raleigh, NC 27603
p: 919-838-9600 f: 919-838-9700

Esse Architects
632 PERSHING ROAD | RALEIGH, NORTH CAROLINA 27608

HEAD, JAMB AND SILL DETAILS

LAKE MYRA COUNTY PARK
Wake County, NC

REVISIONS

Esse Architects P.A. Registered Architectural Corporation 52498 North Carolina Raleigh, NC

MIRANDA DOWNER POTTHOFF Registered Architect 11663 North Carolina Raleigh, NC
Signed by: Miranda Potthoff 1EC945A30B284B4...
7/27/2026

Date: 07/27/26

PC-A521

Docusign Envelope ID: 8BDE9837-570C-8E6A-8205-A6B2A1B21988

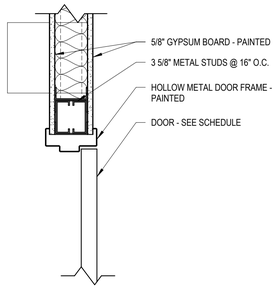

1 PC-A522 HEAD DETAIL @ INTERIOR DOOR
1 1/2" = 1'-0"

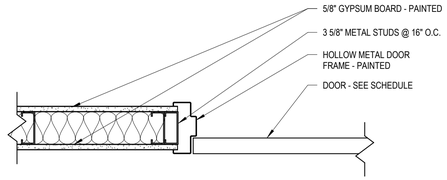

2 PC-A522 JAMB DETAIL @ INTERIOR DOOR
1 1/2" = 1'-0"

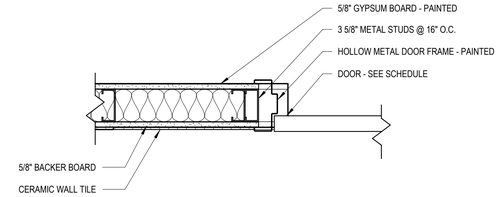

3 PC-A522 JAMB DETAIL @ INTERIOR RESTROOM DOOR
1 1/2" = 1'-0"

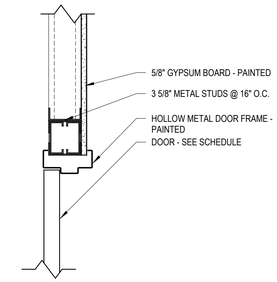

4 PC-A522 HEAD DETAIL @ CUSTODIAL DOOR
1 1/2" = 1'-0"

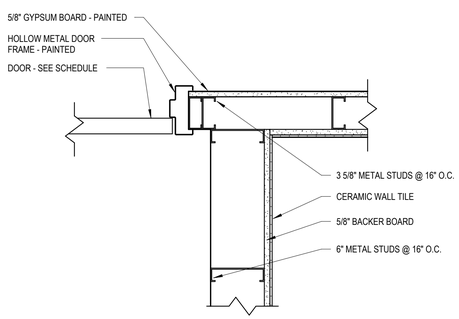

5 PC-A522 JAMB DETAIL @ CUSTODIAL DOOR
1 1/2" = 1'-0"

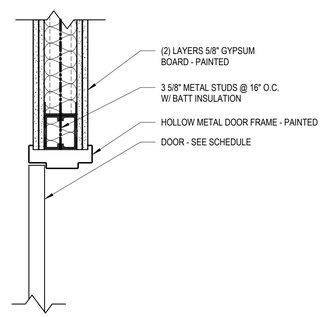

6 PC-A522 HEAD DETAIL @ FIRE RATED WALL
1 1/2" = 1'-0"

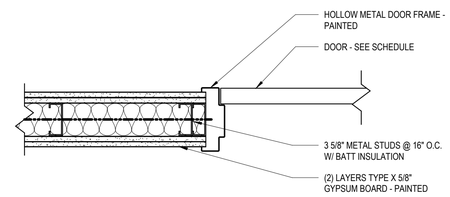

7 PC-A522 JAMB DETAIL @ FIRE RATED WALL
1 1/2" = 1'-0"

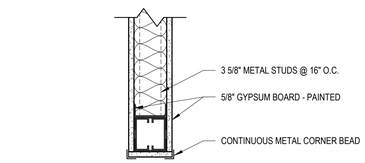

8 PC-A522 HEAD DETAIL @ UNCASED OPENING
1 1/2" = 1'-0"

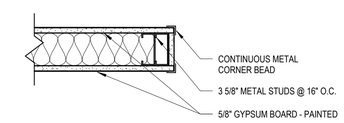

9 PC-A522 JAMB DETAIL @ UNCASED OPENING
1 1/2" = 1'-0"

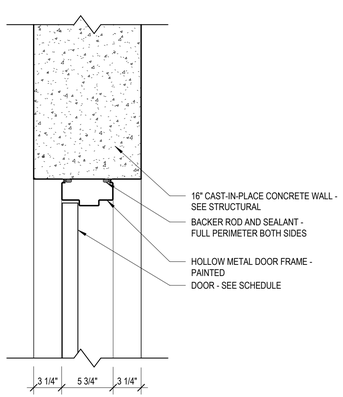

10 PC-A522 HEAD DETAIL @ INT. BASEMENT DOOR
1 1/2" = 1'-0"

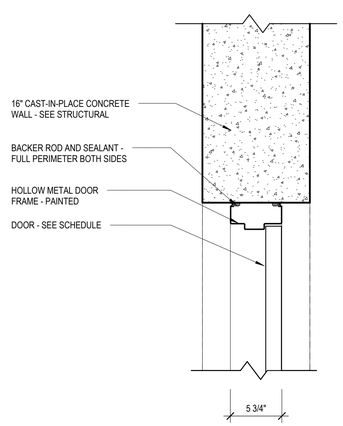

11 PC-A522 JAMB DETAIL @ INT. BASEMENT DOOR
1 1/2" = 1'-0"

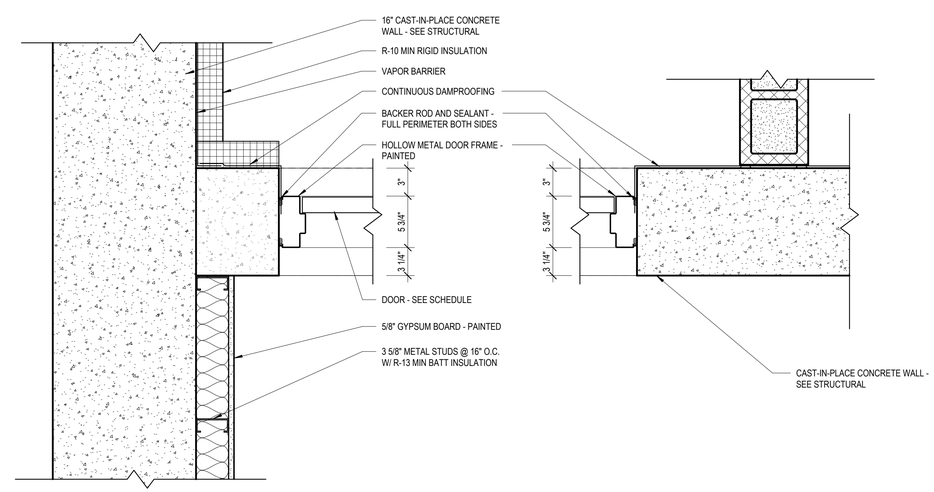

12 PC-A522 JAMB DETAIL @ DOOR B01B
1 1/2" = 1'-0"

Susan Hatchell
Landscape Architecture, PLLC
711 W. North Street, Raleigh, NC 27603
p: 919-838-9600 f: 919-838-9700

Esse Architects
832 PERSHING ROAD | RALEIGH, NORTH CAROLINA 27608

HEAD, JAMB AND SILL DETAILS

LAKE MYRA COUNTY PARK
Wake County, NC

REVISIONS

Esse Architects P.A. Registered Architectural Corporation 52498 North Carolina Raleigh, NC

MIRANDA DONNER ROTHROCK Registered Architect 11663 Signature Miranda Rothrock Date: 07/27/2026 North Carolina Raleigh, NC 7/27/2026

Date: 07/27/26

PC-A522

Docusign Envelope ID: 8BDE9837-570C-8E6A-8205-A6B2A1B21988

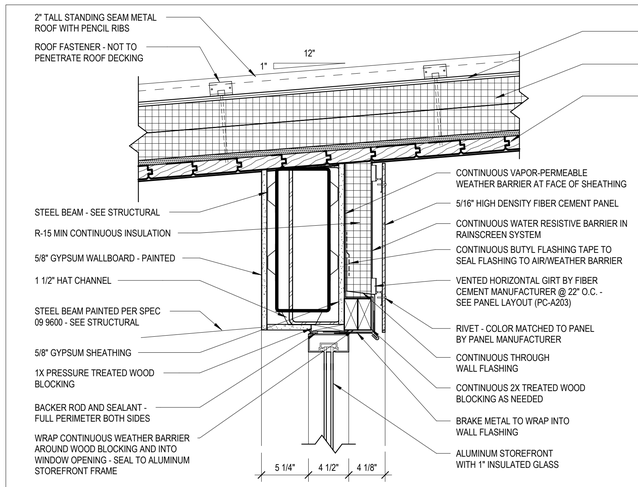

1 PC-A523 HEAD DETAIL @ ENTRY WINDOW
1 1/2" = 1'-0"

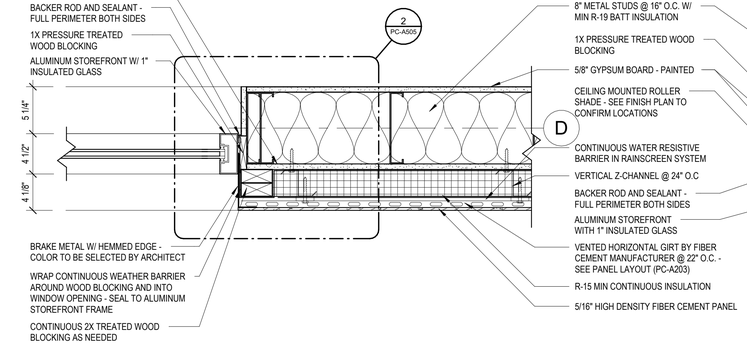

2 PC-A523 JAMB DETAIL @ TYP. WINDOW
1 1/2" = 1'-0"

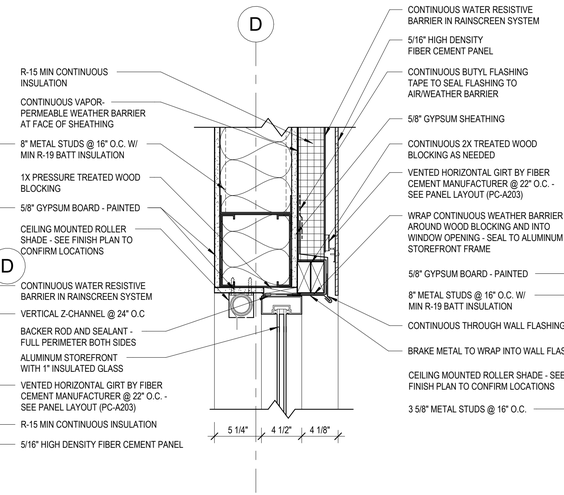

3 PC-A523 HEAD DETAIL @ TYP. WINDOW W/ BLINDS
1 1/2" = 1'-0"

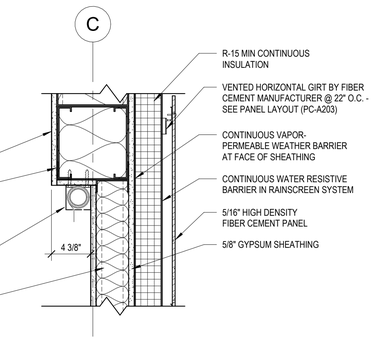

4 PC-A523 HEAD DETAIL @ WINDOW BLINDS INSET
1 1/2" = 1'-0"

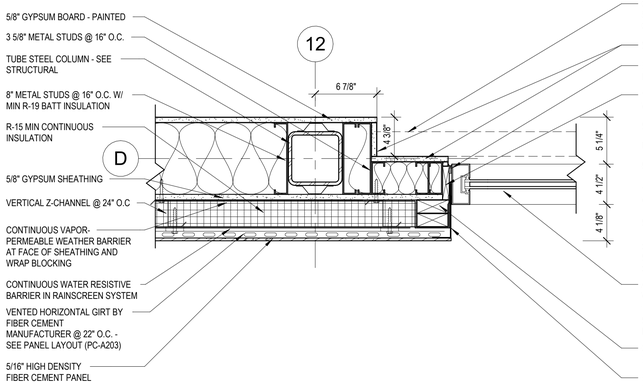

5 PC-A523 JAMB DETAIL @ WINDOW SHADES
1 1/2" = 1'-0"

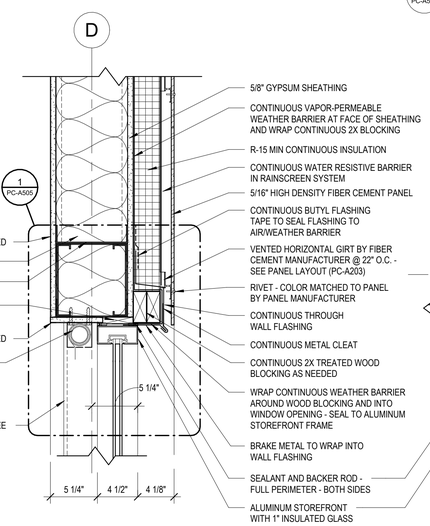

6 PC-A523 HEAD DETAIL @ 90 DEGREE WINDOW
1 1/2" = 1'-0"

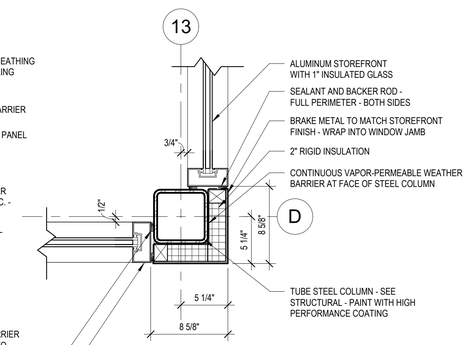

7 PC-A523 JAMB DETAIL @ 90 DEGREE WINDOW
1 1/2" = 1'-0"

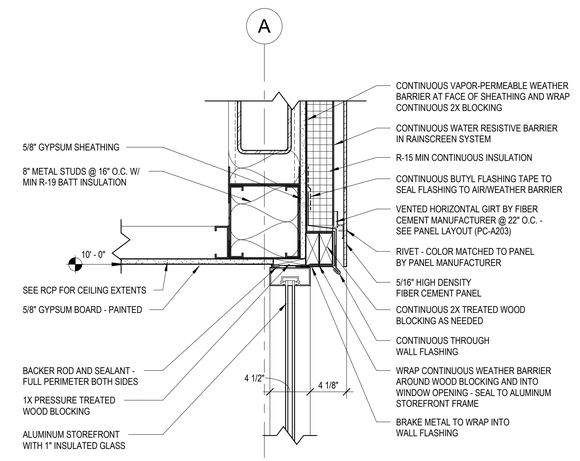

8 PC-A523 HEAD DETAIL @ WINDOWS W/ CLG.
1 1/2" = 1'-0"

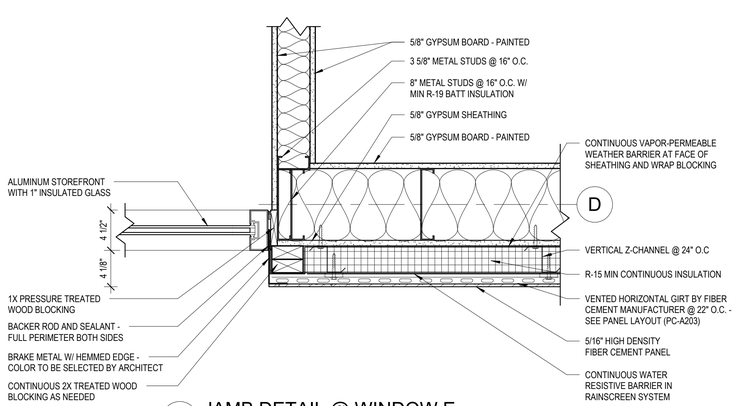

9 PC-A523 JAMB DETAIL @ WINDOW E
1 1/2" = 1'-0"

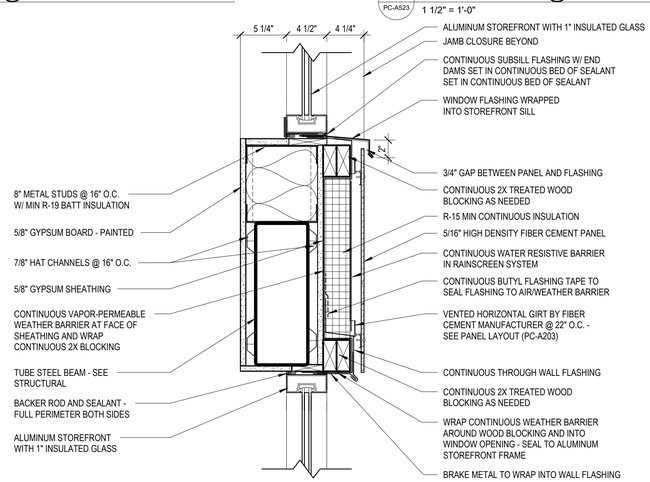

10 PC-A523 HEAD DETAIL @ EXHIBIT WINDOWS
1 1/2" = 1'-0"

Susan Hatchell
Landscape Architecture, PLLC
711 W. North Street, Raleigh, NC 27603
p: 919-838-9600 f: 919-838-9700

Esse Architects
832 PERSHING ROAD | RALEIGH, NORTH CAROLINA 27608

HEAD, JAMB AND SILL DETAILS

LAKE MYRA COUNTY PARK
Wake County, NC

Esse Architects P.A. Registered Architectural Corporation 52498 North Carolina Raleigh, NC

MIRANDA DOWNER POTTHOFF Registered Architect 11663 North Carolina Raleigh, NC
Miranda Potthoff
7/27/2026

REVISIONS

Date: 07/27/26

PC-A523

Docusign Envelope ID: 8BDE9837-570C-8E6A-8205-A6B2A1B21988

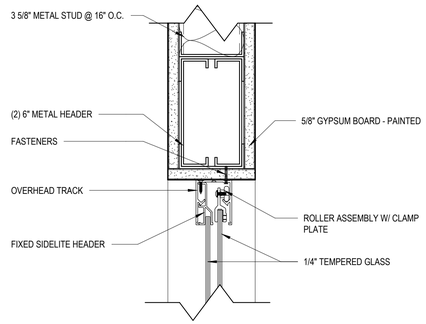

1 PC-A524 HEAD DETAIL @ INT. CLERK WINDOW
3" = 1'-0"

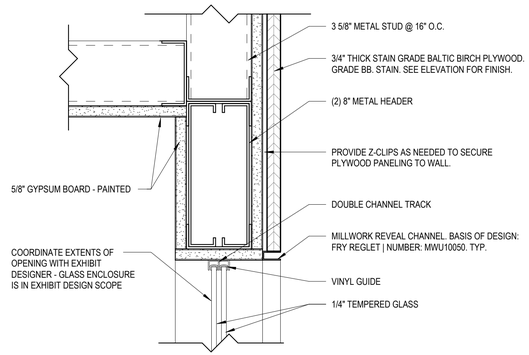

2 PC-A524 HEAD DETAIL @ DISPLAY WINDOW
3" = 1'-0"

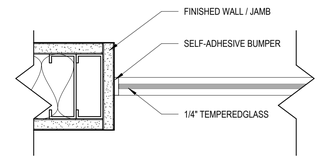

3 PC-A524 JAMD DETAIL @ INT. CLERK WINDOW
3" = 1'-0"

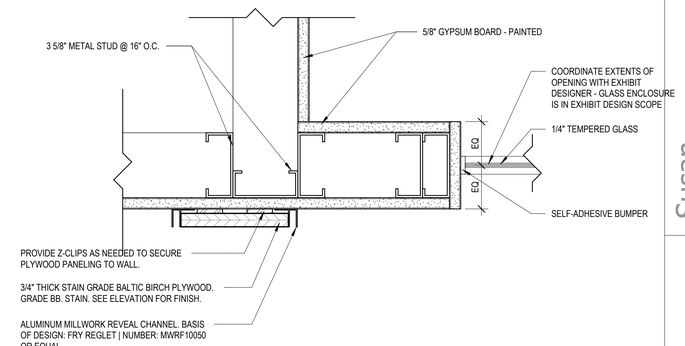

4 PC-A524 JAMB DETAIL @ DISPLAY WINDOW
3" = 1'-0"

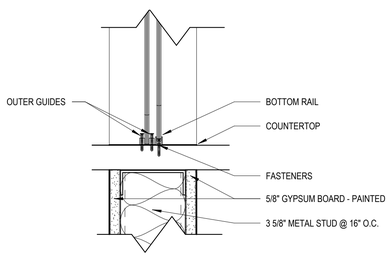

5 PC-A524 SILL DETAIL @ INT. CLERK WINDOW
3" = 1'-0"

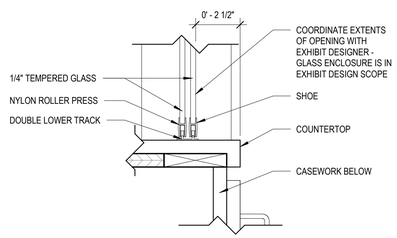

6 PC-A524 SILL DETAIL @ DISPLAY WINDOW
3" = 1'-0"

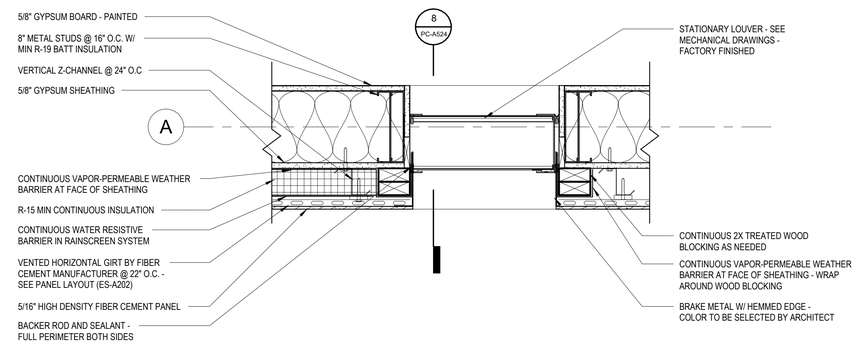

7 PC-A524 LOUVER PLAN DETAIL
1 1/2" = 1'-0"

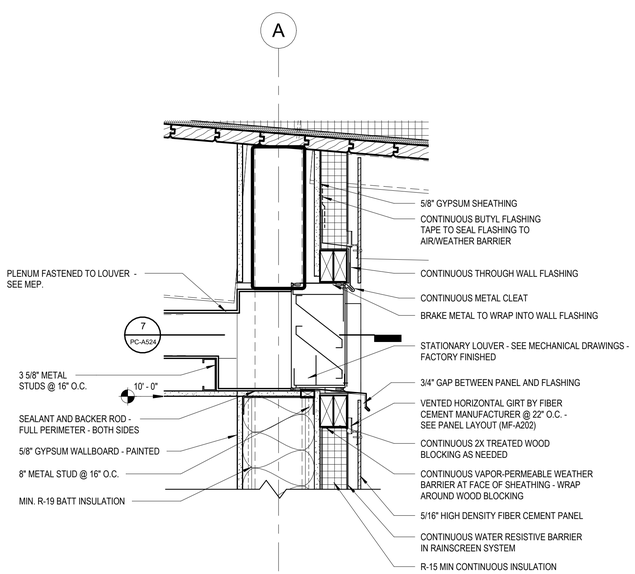

8 PC-A524 DETAIL SECTION @ LOUVER IN STUD WALL
1 1/2" = 1'-0"

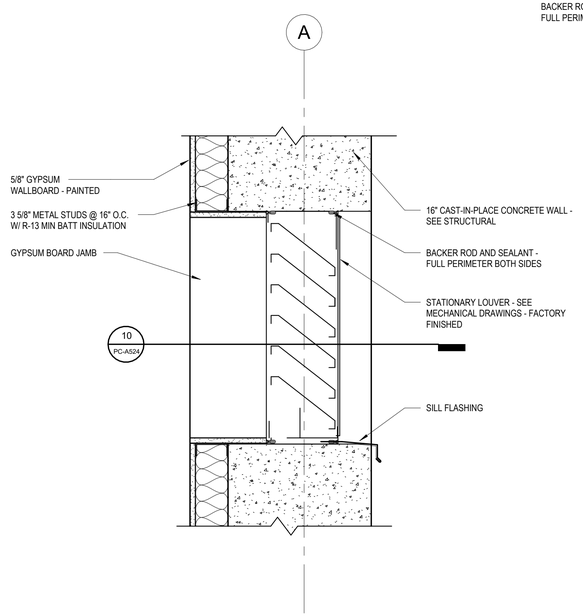

9 PC-A524 DETAIL SECTION @ LOUVER IN CONCRETE WALL
1 1/2" = 1'-0"

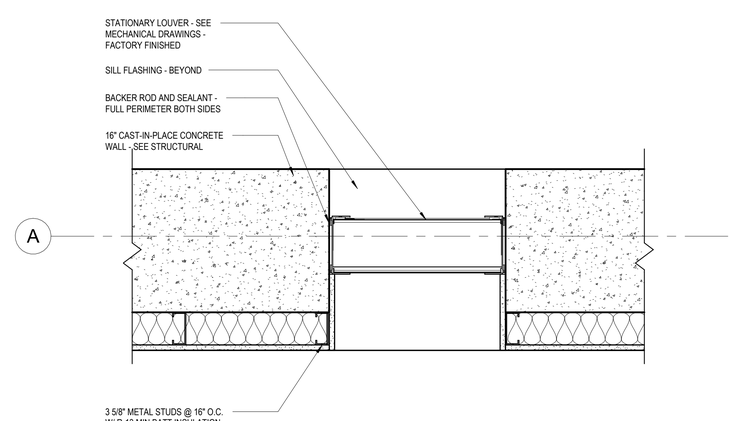

10 PC-A524 PLAN DETAIL @ LOUVER
1 1/2" = 1'-0"

Susan Hatchell
Landscape Architecture, PLLC
711 W. North Street, Raleigh, NC 27603
p: 919-838-9600 f: 919-838-9700

Esse Architects
830 PERSHING ROAD | RALEIGH, NORTH CAROLINA 27608

HEAD, JAMB AND SILL DETAILS

LAKE MYRA COUNTY PARK
Wake County, NC

REVISIONS

Esse Architects P.A. Registered Architectural Corporation 52498 Raleigh, North Carolina

MIRANDA DOWNER POTTHOFF Registered Architect 11663 Raleigh, North Carolina
Docusigned by: Miranda Potthoff
7/27/2026

Date: 07/27/26

PC-A524

Docusign Envelope ID: 8BDE9837-570C-8E6A-8205-A6B2A1B21988

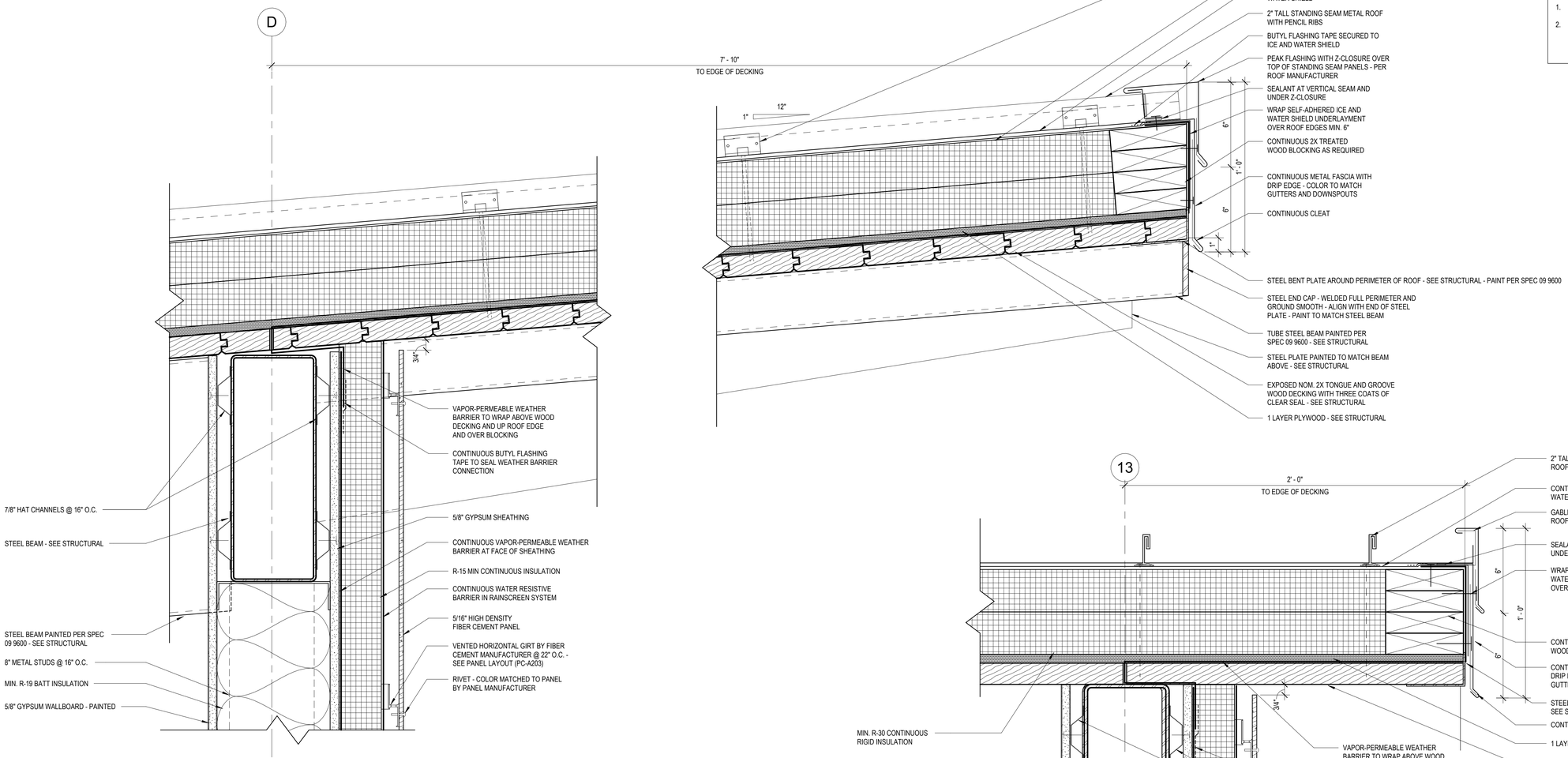

1 PC-A525 ROOF DETAIL @ UPPER SIDE
3" = 1'-0"

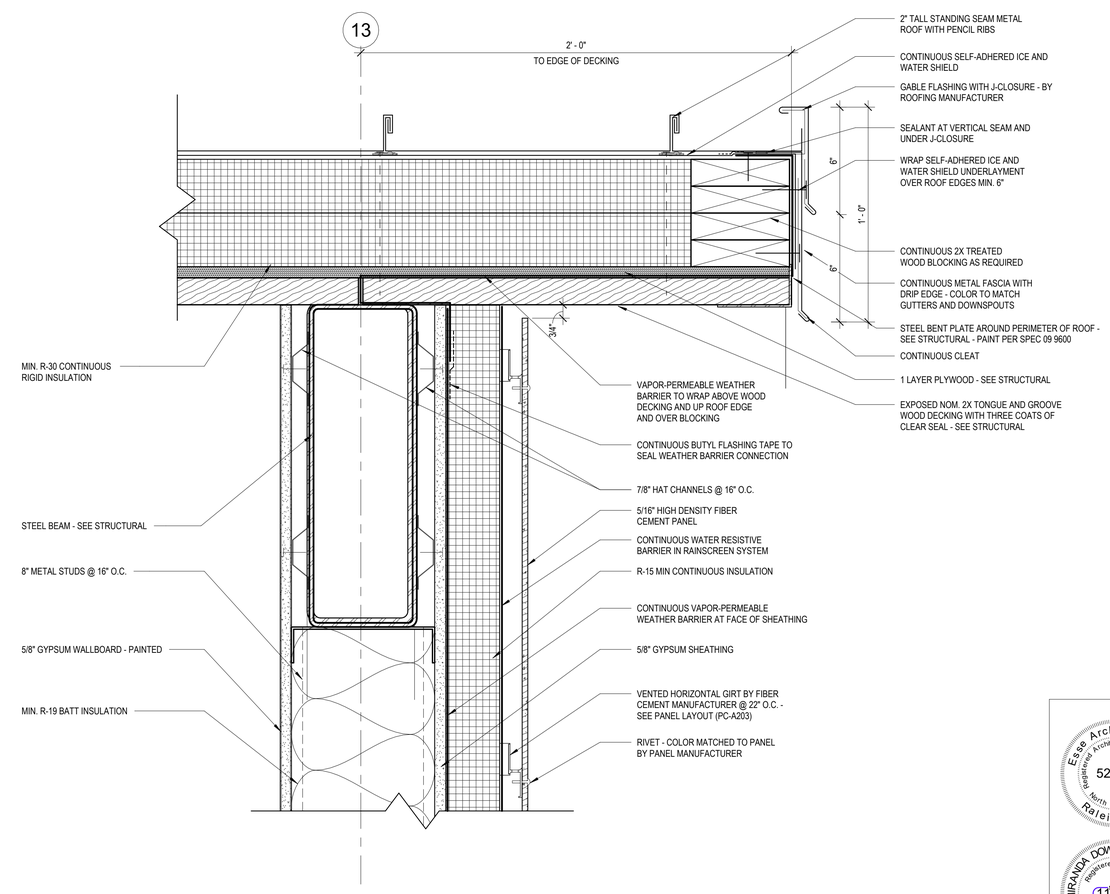

2 PC-A525 ROOF DETAIL @ ADMIN DECK
3" = 1'-0"

ROOF DECKING NOTES

1. STRUCTURAL WOOD ROOF DECK IS ALSO FINISHED CEILING - **NO FASTENERS SHALL PENETRATE DECKING**
2. NO EXPOSED CONDUIT SHALL BE RUN ACROSS UNDERSIDE OF WOOD DECKING WITHOUT REVIEW AND COORDINATION WITH THE ARCHITECT. COORDINATE FOR LIGHTING, SECURITY, ETC.

Susan Hatchell Landscape Architecture, PLLC
711 W. North Street, Raleigh, NC 27603
p: 919-838-9600 f: 919-838-9700

Esse Architects
832 PERSHING ROAD | RALEIGH, NORTH CAROLINA 27608

ROOF DETAILS

LAKE MYRA COUNTY PARK
Wake County, NC

REVISIONS

Esse Architects P.A. 52498 Registered Architectural Corporation North Carolina Raleigh, NC

MIRANDA DOWNER POTTHOFF Registered Architect North Carolina Raleigh, NC
Signature: Miranda Potthoff
Date: 7/27/2026

Date: 07/27/26

PC-A525

Docusign Envelope ID: 8BDE9837-570C-8E6A-8205-A6B2A1B21988

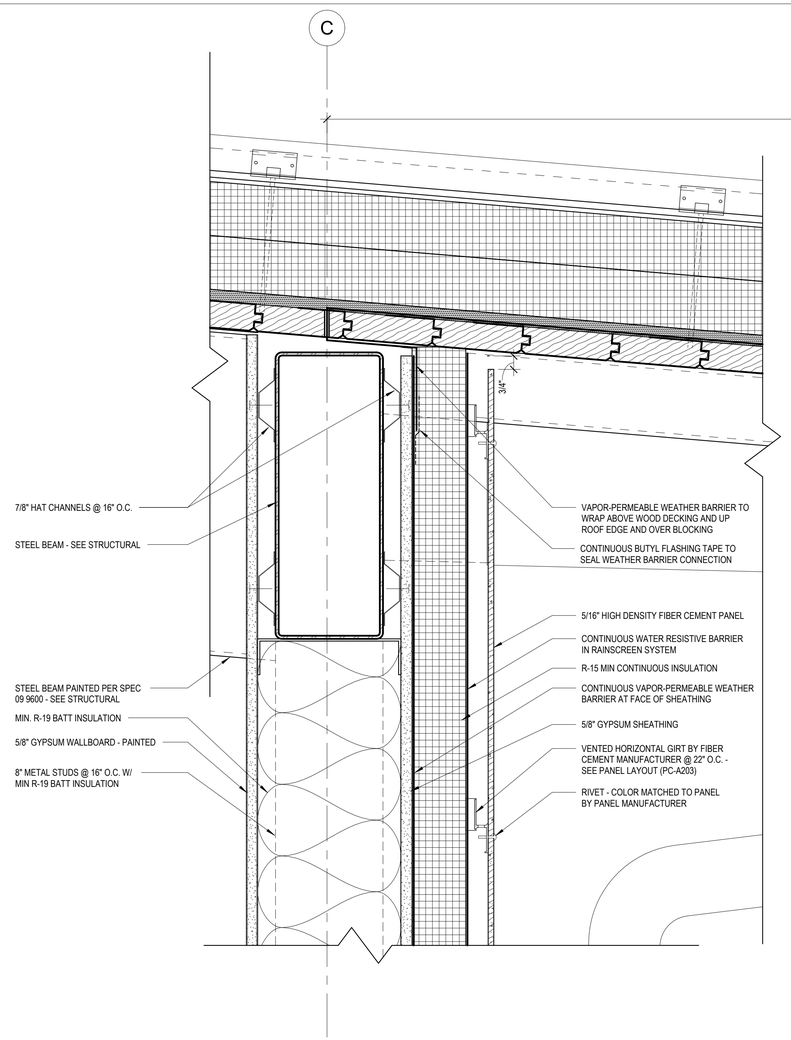

1 PC-A526 ROOF DETAIL @ LOW SIDE
3" = 1'-0"

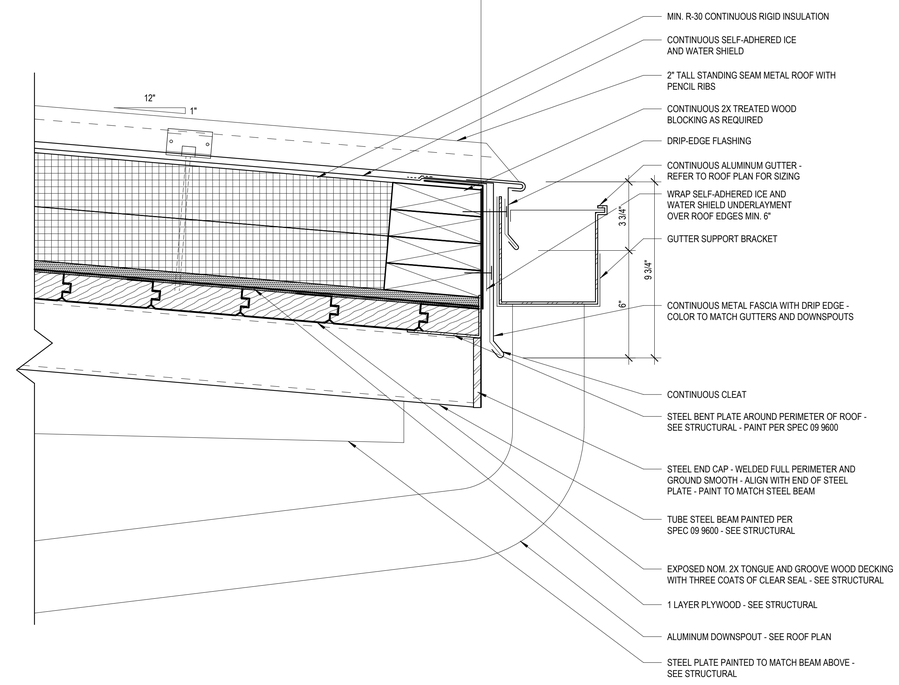

ROOF DECKING NOTES

1. STRUCTURAL WOOD ROOF DECK IS ALSO FINISHED CEILING - **NO FASTENERS SHALL PENETRATE DECKING**
2. NO EXPOSED CONDUIT SHALL BE RUN ACROSS UNDERSIDE OF WOOD DECKING WITHOUT REVIEW AND COORDINATION WITH THE ARCHITECT. COORDINATE FOR LIGHTING, SECURITY, ETC.

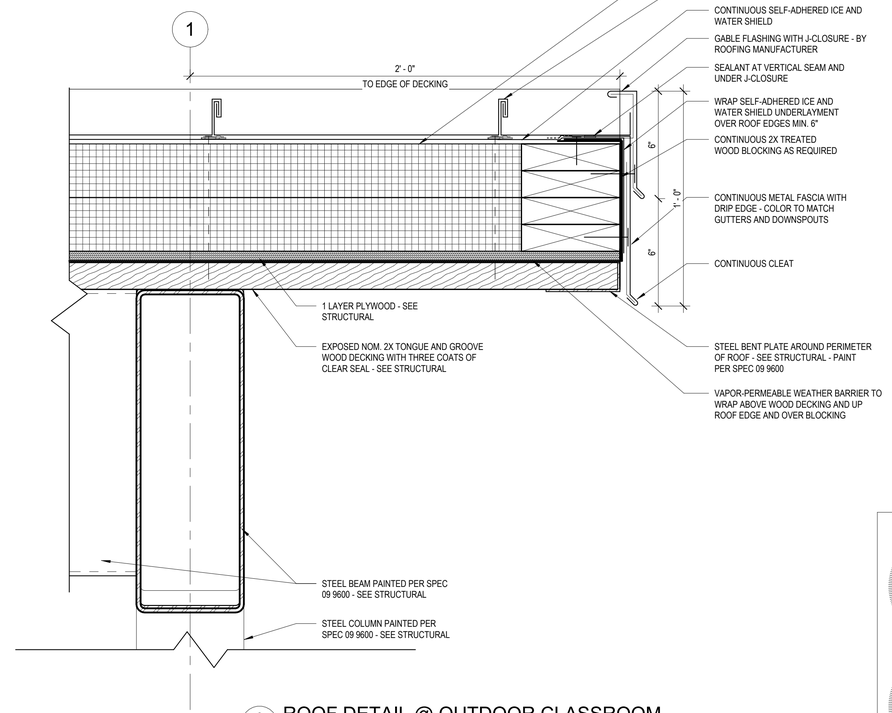

2 PC-A526 ROOF DETAIL @ OUTDOOR CLASSROOM
3" = 1'-0"

Susan Hatchell
Landscape Architecture, PLLC
711 W. North Street, Raleigh, NC 27603
p: 919-838-9600 f: 919-838-9700

Esse Architects
8312 PERSIMMON ROAD | RALEIGH, NORTH CAROLINA 27608

ROOF DETAILS

LAKE MYRA COUNTY PARK
Wake County, NC

REVISIONS

Esse Architects P.A. Registered Architectural Corporation 52498 North Carolina Raleigh, NC

MIRANDA DONNER ROTHHOFF Registered Architect 17663 Signature: Miranda Rothhoff DocuSigned by: 1EC94A9BC284B4E... North Carolina Raleigh, NC 7/27/2026

Date: 07/27/26

PC-A526

Docusign Envelope ID: 8BDE9837-570C-8E6A-8205-A6B2A1B21988

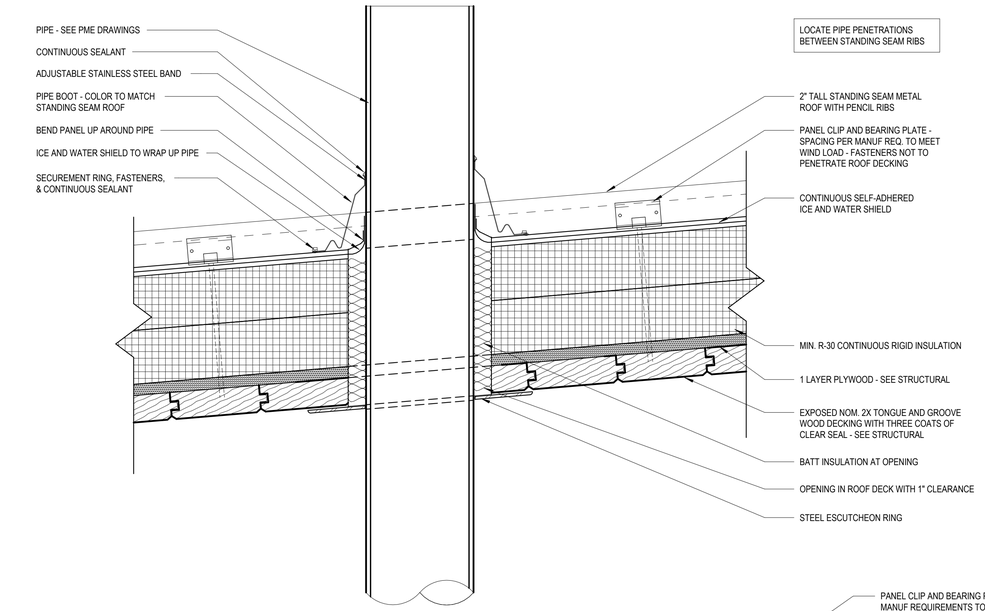

1 PC-A527 ROOF DETAIL @ PENETRATION
3" = 1'-0"

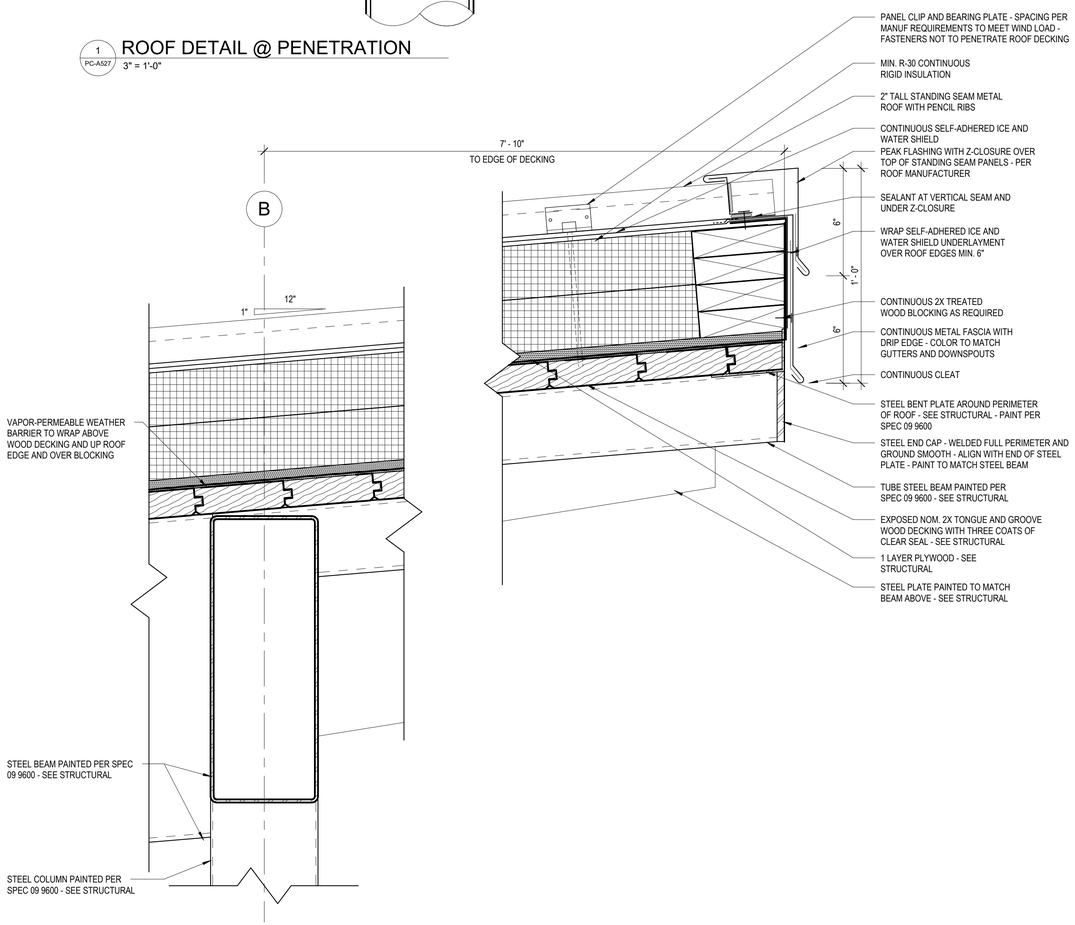

2 PC-A527 ROOF DETAIL @ OUTDOOR CLASSROOM 2
3" = 1'-0"

ROOF DECKING NOTES

1. STRUCTURAL WOOD ROOF DECK IS ALSO FINISHED CEILING - **NO FASTENERS SHALL PENETRATE DECKING**
2. NO EXPOSED CONDUIT SHALL BE RUN ACROSS UNDERSIDE OF WOOD DECKING WITHOUT REVIEW AND COORDINATION WITH THE ARCHITECT. COORDINATE FOR LIGHTING, SECURITY, ETC.

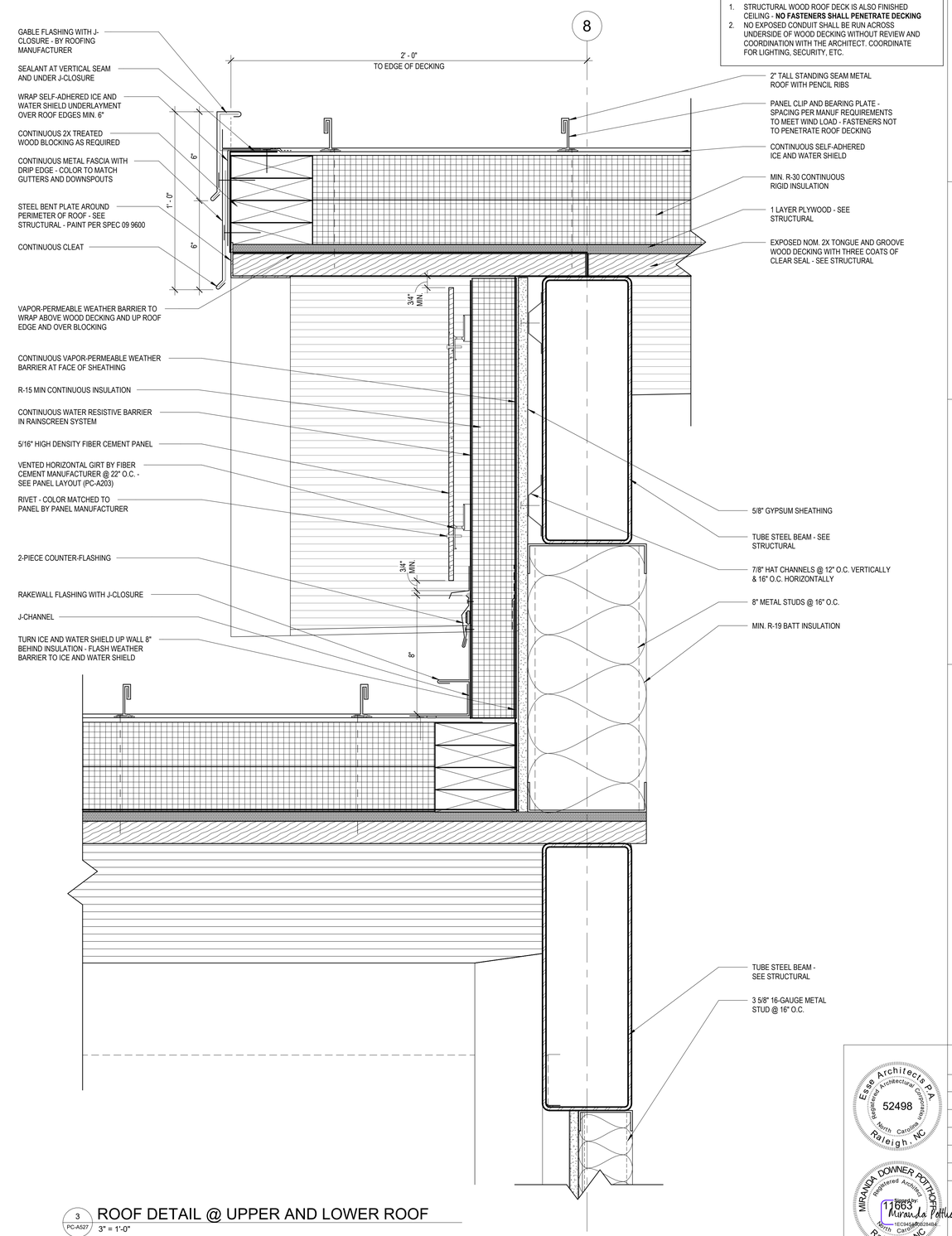

3 PC-A527 ROOF DETAIL @ UPPER AND LOWER ROOF
3" = 1'-0"

Susan Hatchell
Landscape Architecture, PLLC
711 W. North Street, Raleigh, NC 27603
p: 919-838-9600 f: 919-838-9700

Esse Architects
632 PERSHING ROAD | RALEIGH, NORTH CAROLINA 27608

ROOF DETAILS

LAKE MYRA COUNTY PARK
Wake County, NC

REVISIONS

Esse Architects P.A. Registered Architectural Corporation 52498 North Carolina Raleigh, NC

MIRANDA DOWNER POTTHOFF Registered Architect 11653 North Carolina Raleigh, NC
Miranda Potthoff
DocuSign Envelope ID: 1EC9454B-0E284B4...
7/27/2026

Date: 07/27/26

PC-A527

Docusign Envelope ID: 8BDE9837-570C-8E6A-8205-A6B2A1B21988

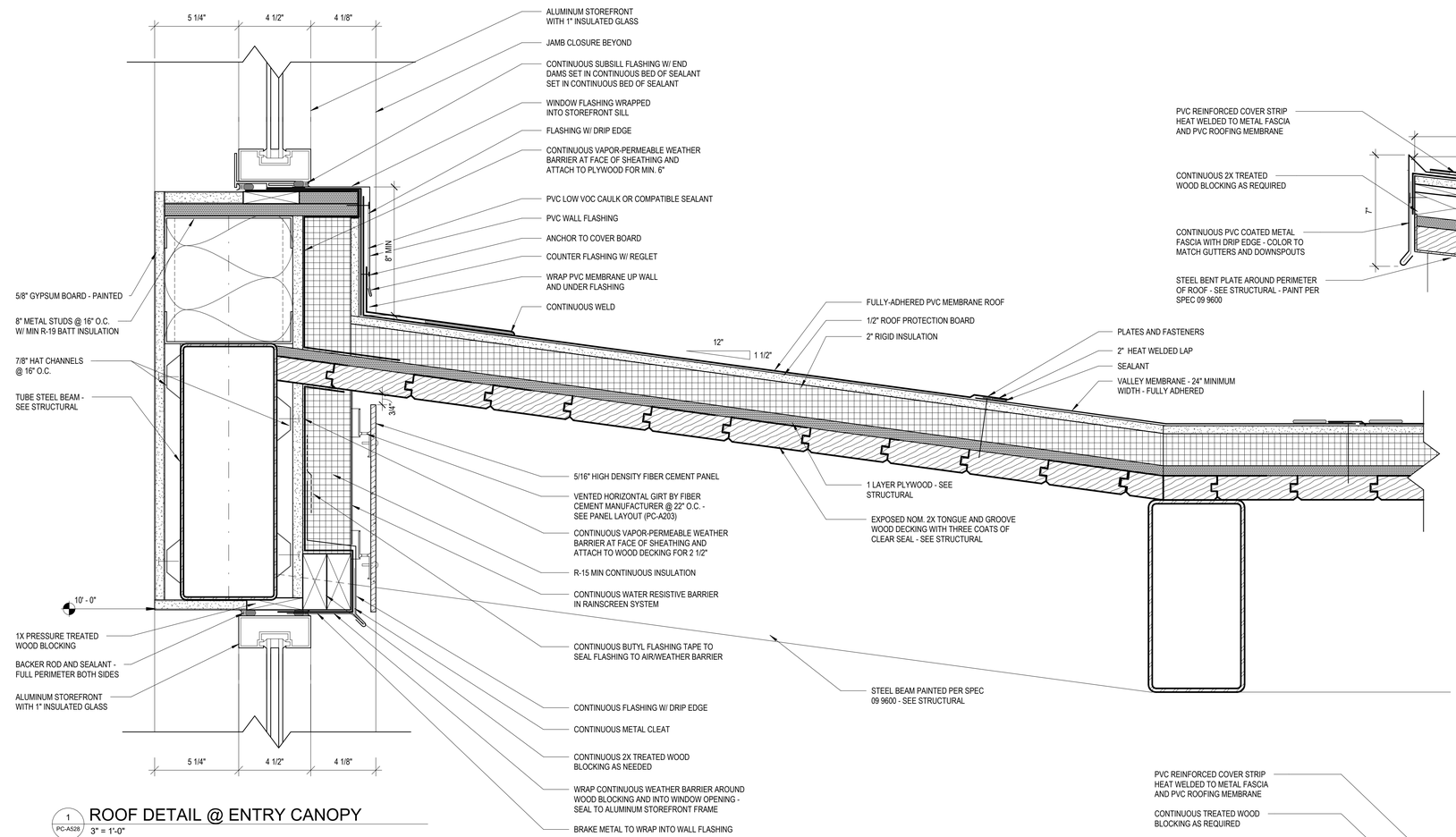

1 PC-A528 ROOF DETAIL @ ENTRY CANOPY
3" = 1'-0"

ROOF DECKING NOTES

1. STRUCTURAL WOOD ROOF DECK IS ALSO FINISHED CEILING - **NO FASTENERS SHALL PENETRATE DECKING**
2. NO EXPOSED CONDUIT SHALL BE RUN ACROSS UNDERSIDE OF WOOD DECKING WITHOUT REVIEW AND COORDINATION WITH THE ARCHITECT. COORDINATE FOR LIGHTING, SECURITY, ETC.

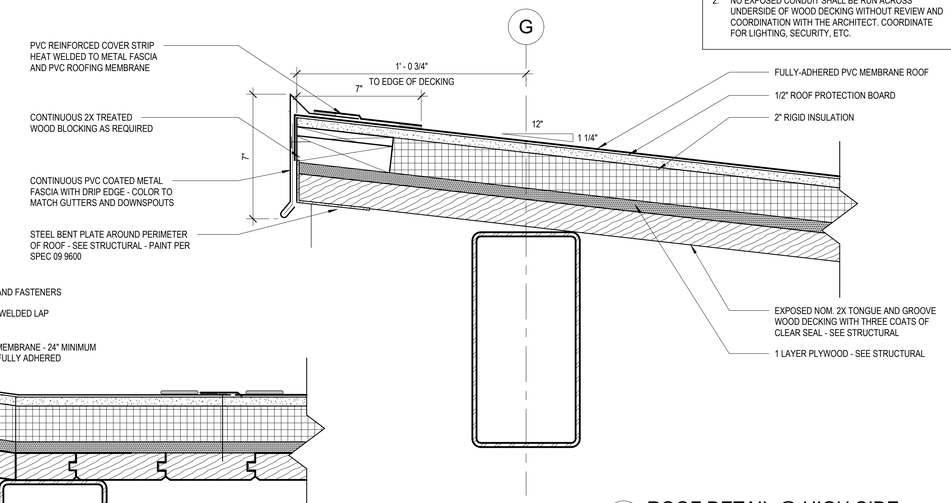

2 PC-A528 ROOF DETAIL @ HIGH SIDE
3" = 1'-0"

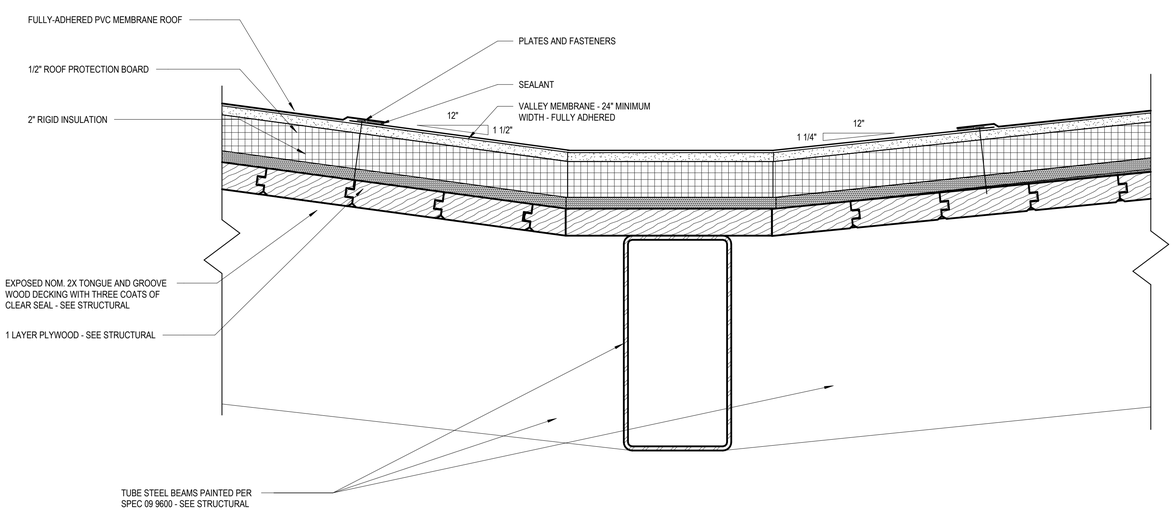

3 PC-A528 ROOF DETAIL @ CANOPY VALLEY
3" = 1'-0"

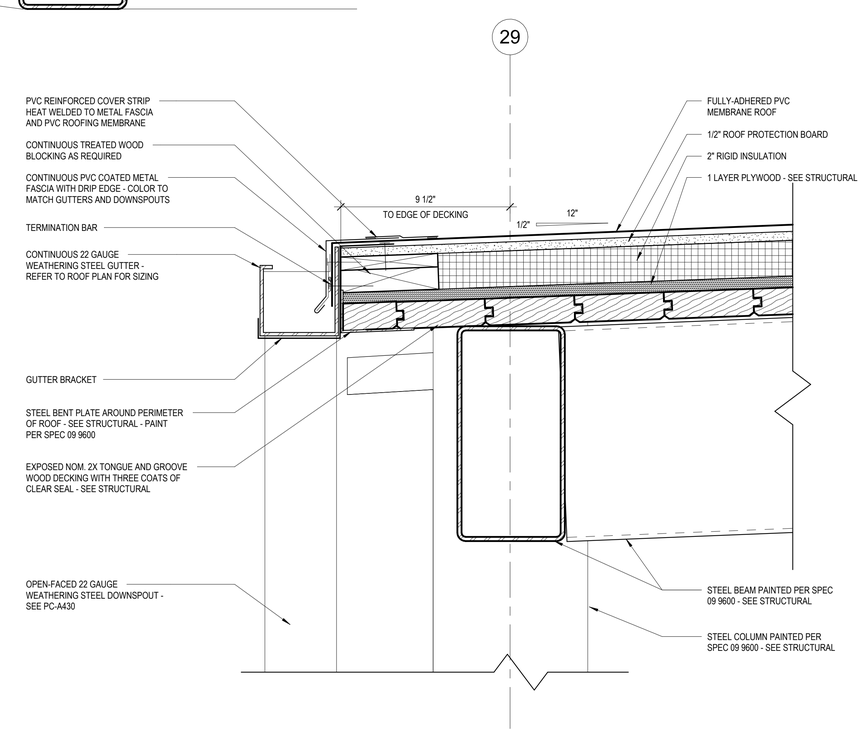

4 PC-A528 ROOF DETAIL @ CANOPY GUTTER
3" = 1'-0"

Susan Hatchell Landscape Architecture, PLLC
711 W. North Street, Raleigh, NC 27603
p: 919-838-9600 f: 919-838-9700

Esse Architects
832 PERSHING ROAD | RALEIGH, NORTH CAROLINA 27608

ROOF DETAILS

LAKE MYRA COUNTY PARK
Wake County, NC

REVISIONS

Esse Architects, P.A. Registered Architectural Corporation 52498 North Carolina Raleigh, NC

MIRANDA DOWNER POTHOFF Registered Architect 11863 Miranda Pothoff Docusigned by: 1EC04A8E0284BBF... 7/27/2026 North Carolina Raleigh, NC

Date: 07/27/26

PC-A528

Docusign Envelope ID: 8BDE9837-570C-8E6A-8205-A6B2A1B21988

PARK CENTER DOOR SCHEDULE

	DOOR					FRAME			DETAIL					
NUMBER	HEIGHT	WIDTH	MATERIAL	FINISH	ELEVATION	MATERIAL	FINISH	ELEVATION	HEAD	JAMB	SILL	HW Set	RATING	COMMENTS
100	8' - 0"	6' - 0"	AL	PT-5	E	AL	PT-5	B/ PC-A602	1/PC-A521	3/PC-A521	6/PC-A513	PC - 1.0		EXTERIOR DOOR WITH AUTO OPERATOR, DOOR CONTACT, CARD READER ON PEDESTAL WITH AUTO OPERATOR BUTTON
100A	8' - 0"	6' - 0"	AL	PT-5	E	AL	PT-5	K/ PC-A602	1/PC-A521	3/PC-A521	6/PC-A513	PC - 3.0		EXTERIOR DOOR, DOOR CONTACT
101	7' - 0"	3' - 0"	WD	STAIN	H	HM	PT-4	1	1/PC-A522	2/PC-A522	5/PC-A513	PC - 10.0		CARD READER
101A	8' - 0"	3' - 0"	HM	PT-3	C	HM	PT-3	1	7/PC-A521	9/PC-A521	4/PC-A513	PC - 5.0		EXTERIOR DOOR, DOOR CONTACT, CARD READER, PAINT TO BE SEMI-GLOSS, INTERIOR FACE OF DOOR & TRIM TO BE PT-4
103	7' - 0"	3' - 0"	WD	STAIN	F	HM	PT-4	1	1/PC-A522	2/PC-A522	--	PC - 20.0		
104	7' - 0"	3' - 0"	WD	STAIN	H	HM	PT-4	1	1/PC-A522	2/PC-A522	--	PC - 11.0		CARD READER, DOOR CONTACT
105	7' - 0"	3' - 0"	WD	STAIN	F	HM	PT-4	1	1/PC-A522	2/PC-A522	--	PC - 14.0		
106	7' - 0"	3' - 0"	WD	STAIN	F	HM	PT-4	1	1/PC-A522	2/PC-A522	8/PC-A513	PC - 20.0		
107	7' - 0"	3' - 0"	WD	STAIN	I	HM	PT-4	1	1/PC-A522	2/PC-A522	--	PC - 18.0		
109	7' - 0"	3' - 0"	WD	STAIN	I	HM	PT-4	1	1/PC-A522	2/PC-A522	--	PC - 18.0		
112	7' - 0"	3' - 0"	WD	STAIN	F	HM	PT-4	1	1/PC-A522	2/PC-A522	--	PC - 14.0		
114	8' - 0"	3' - 0"	AL	PT-5	D	AL	PT-5	M/ PC-A602	1/PC-A521	2/PC-A521 4/PC-A521	2/PC-A513	PC - 4.0		EXTERIOR DOOR, DOOR CONTACT
114A	7' - 0"	3' - 0"	HM	PT-1	F	HM	PT-1	1	1/PC-A522	2/PC-A522	--	PC - 19.0		
115	8' - 0"	3' - 0"	HM	PT-5	A	HM	PT-5	1	7/PC-A521	8/PC-A521	3/PC-A513	PC - 9.0		EXTERIOR DOOR, DOOR CONTACT, PREP DOOR FROM CENTER HINGE TO LOCK POCKET FOR FUTURE TIMER LOCK, INTERIOR FACE OF FRAME AND DOOR TO BE PT-1
115A	7' - 0"	3' - 0"	WD	STAIN	F	HM	PT-4	1	1/PC-A522	3/PC-A522	9/PC-A513	PC - 21.0		DOOR CONTACT
116	7' - 0"	3' - 0"	WD	STAIN	F	HM	PT-4	1	4/PC-A522	5/PC-A522	--	PC - 19.0		
117	8' - 0"	3' - 0"	HM	PT-5	A	HM	PT-5	1	7/PC-A521	8/PC-A521	3/PC-A513	PC - 9.0		EXTERIOR DOOR, DOOR CONTACT, PREP DOOR FROM CENTER HINGE TO LOCK POCKET FOR FUTURE TIMER LOCK, INTERIOR FACE OF FRAME AND DOOR TO BE PT-1
117A	7' - 0"	3' - 0"	WD	STAIN	F	HM	PT-4	1	1/PC-A522	3/PC-A522	9/PC-A513	PC - 21.0		DOOR CONTACT
118	8' - 0"	3' - 0"	HM	PT-5	A	HM	PT-5	1	7/PC-A521	8/PC-A521	3/PC-A513	PC - 8.0		EXTERIOR DOOR, DOOR CONTACT, INTERIOR FACE OF DOOR AND TRIM TO BE PT-1
120	7' - 0"	6' - 0"	HM	PT-1	G	HM	PT-1	1	1/PC-A522	2/PC-A522	--	PC - 17.0		PAINT TO BE SEMI-GLOSS FINISH
121	8' - 0"	3' - 0"	AL	PT-5	D	AL	PT-5	S/ PS-A602	6/PC-A521	2/PC-A521 3/PC-A501	6/PC-A513	PC - 2.0		EXTERIOR DOOR, DOOR CONTACT, CARD READER
121A	8' - 0"	3' - 0"	AL	PT-5	D	AL	PT-5	O/ PC-A602	6/PC-A521	5/PC-A521 2/PC-A521	4/PC-A513	PC - 4.0		EXTERIOR DOOR, DOOR CONTACT
121B	7' - 0"	3' - 0"	WD	STAIN	H	HM	PT-4	1	6/PC-A522	7/PC-A522 4/PC-A521	7/PC-A513	PC - 13.0	2 HR	CARD READER
121C	7' - 0"	6' - 0"	HM	PT-1	G	HM	PT-1	1	1/PC-A522	2/PC-A522	--	PC - 17.0		PAINT TO BE SEMI-GLOSS FINISH
122	8' - 0"	3' - 0"	AL	PT-5	D	AL	PT-5	R/ PC-A602	6/PC-A521	2/PC-A521 2/PC-A501	4/PC-A513	PC - 2.0		EXTERIOR DOOR, DOOR CONTACT, CARD READER
122A	8' - 0"	3' - 0"	AL	PT-5	D	AL	PT-5	P/ PC-A602	6/PC-A521	5/PC-A521 2/PC-A521	4/PC-A513	PC - 4.0		EXTERIOR DOOR, DOOR CONTACT
122B	7' - 0"	6' - 0"	HM	PT-1	G	HM	PT-1	1	1/PC-A522	2/PC-A522	--	PC - 17.0		PAINT TO BE SEMI-GLOSS FINISH
B01	8' - 0"	6' - 0"	HM	PT-3	B	HM	PT-3	1	10/PC-A521	11/PC-A521	5/PC-A505	PC - 6.0		EXTERIOR DOOR, CARD READER, PAINT TO BE SEMI-GLOSS FINISH
B01A	7' - 0"	3' - 0"	HM	PT-4	A	HM	PT-4	1	10/PC-A522	11/PC-A522	--	PC - 16.0		
B01B	7' - 0"	3' - 0"	HM	PT-4	A	HM	PT-4	1	10/PC-A522	12/PC-A522	--	PC - 15.0		DOOR CONTACT
B02	7' - 0"	3' - 0"	HM	PT-3	A	HM	PT-3	1	6/PC-A522	7/PC-A522	--	PC - 12.0	2 HR	CARD READER, KEYPAD IN MORTISE LOCK, PAINT TO BE SEMI-GLOSS FINISH
B03	8' - 0"	6' - 0"	HM	PT-3	B	HM	PT-3	1	10/PC-A521	11/PC-A521	5/PC-A505	PC - 7.0		EXTERIOR DOOR, DOOR CONTACT, PAINT TO BE SEMI-GLOSS FINISH

DOOR HARDWARE NOTES:
1. CARD READERS, DOOR CONTACTS, AND POWER SUPPLIES TO BE BY THE OWNER'S SECURITY VENDOR.
2. THE BALANCE OF DOOR HARDWARE IS IN THE GENERAL CONTRACTOR'S SCOPE.
3. DOORS WITH CARD READERS WILL ALSO RECEIVE DOOR CONTACTS.

DOOR ELEVATIONS

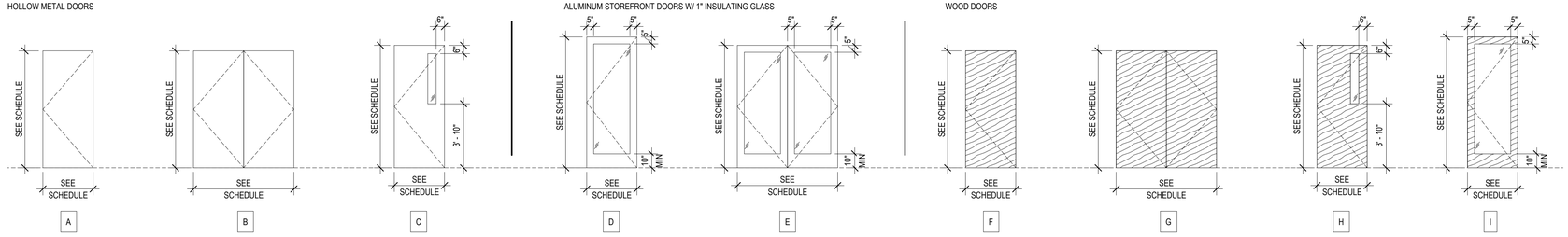

FRAME ELEVATIONS

HOLLOW METAL DOOR FRAMES

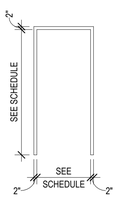

NOTE: SEE A602 FOR ALUMINUM DOOR FRAMES

Susan Hatchell
Landscape Architecture, PLLC
711 W. North Street, Raleigh, NC 27603
p: 919-838-9600 f: 919-838-9700

Esse Architects
632 PERSHING ROAD | RALEIGH, NORTH CAROLINA 27608

DOOR SCHEDULE

LAKE MYRA COUNTY PARK
Wake County, NC

REVISIONS

Esse Architects P.A. Registered Architectural Corporation 52498 North Carolina Raleigh, NC

MIRANDA DONNER ROTHOFF Registered Architect 17663 North Carolina Raleigh, NC
Signature: Miranda Rothoff
Date: 7/27/2026

Date: 07/27/26

PC-A601

Docusign Envelope ID: 8BDE9837-570C-8E6A-8205-A6B2A1B21988

WINDOW ELEVATIONS

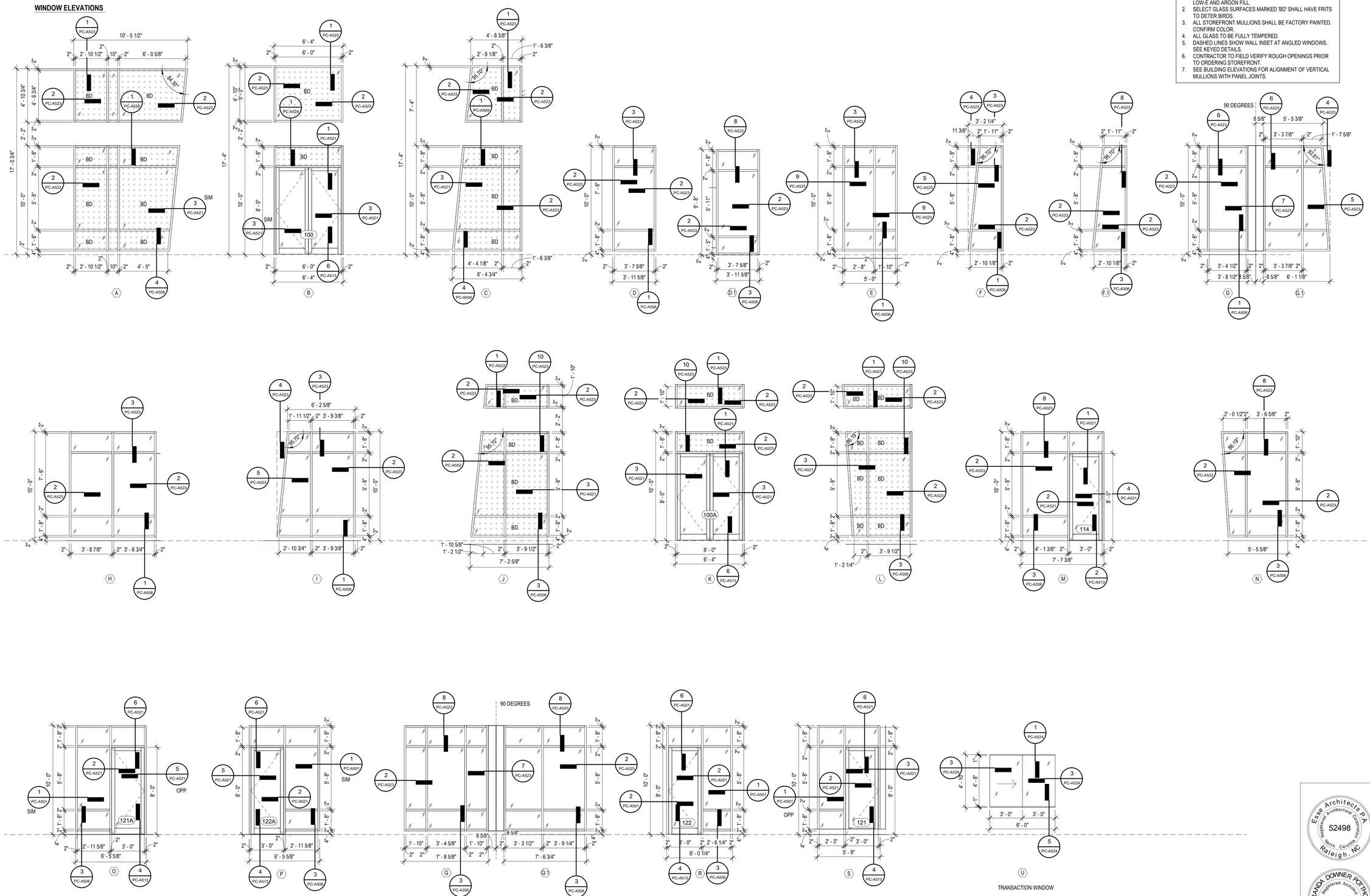

GENERAL GLAZING NOTES

1. ALL EXTERIOR GLAZING TO BE 1" INSULATED GLASS W/ LOW-E AND ARGON FILL.
2. SELECT GLASS SURFACES MARKED 'BD' SHALL HAVE FRITS TO DETER BIRDS.
3. ALL STOREFRONT MULLIONS SHALL BE FACTORY PAINTED. CONFIRM COLOR.
4. ALL GLASS TO BE FULLY TEMPERED.
5. DASHED LINES SHOW WALL INSET AT ANGLED WINDOWS. SEE KEYED DETAILS.
6. CONTRACTOR TO FIELD VERIFY ROUGH OPENINGS PRIOR TO ORDERING STOREFRONT.
7. SEE BUILDING ELEVATIONS FOR ALIGNMENT OF VERTICAL MULLIONS WITH PANEL JOINTS.

Susan Hatchell
Landscape Architecture, PLLC
711 W. North Street, Raleigh, NC 27603
p: 919-838-9600 f: 919-838-9700

Esse Architects
828 PERSHING ROAD | RALEIGH, NORTH CAROLINA 27608

WINDOW SCHEDULE

LAKE MYRA COUNTY PARK
Wake County, NC

REVISIONS

Esse Architects, P.A. Registered Architectural Corporation 52498 North Carolina Raleigh, NC

MIRANDA DOWNER POTHOFF Registered Architect 11863 North Carolina Raleigh, NC
Miranda Potthoff
DocuSigned by: 1EC04586D284B8E...
7/27/2026

Date: 07/27/26

PC-A602

GENERAL NOTES:

1. THE STRUCTURAL DRAWINGS MUST BE USED IN CONJUNCTION WITH THE ARCHITECTURAL, CIVIL, MECHANICAL, PLUMBING, AND ELECTRICAL DRAWINGS, AND THE SPECIFICATIONS. THE CONTRACTOR MUST VERIFY THE REQUIREMENTS OF OTHER TRADES AS TO SLEEVES, CHASES, HANGERS, INSERTS, ANCHORS, HOLES, AND ADDITIONAL ITEMS TO BE PLACED OR SET IN THE STRUCTURAL WORK.

2. THIS STRUCTURE HAS BEEN DESIGNED IN ACCORDANCE WITH THE PROVISIONS OF THE NORTH CAROLINA STATE BUILDING CODE, 2024 EDITION.

3. THE CONTRACTOR MUST PROVIDE TEMPORARY SHORING AND BRACING REQUIRED TO ERECT AND HOLD THE STRUCTURE IN PROPER ALIGNMENT UNTIL PERMANENT SUPPORTS AND LATERAL BRACING ARE IN PLACE.

4. THE WORK OUTLINED IN THE SCHEDULE OF SPECIAL INSPECTIONS IS SUBJECT TO SPECIAL INSPECTIONS AS DESCRIBED IN THE SCHEDULE OF SPECIAL INSPECTIONS.

5. DISCREPANCIES WITHIN DRAWINGS, BETWEEN THE SPECIFICATIONS AND THE DRAWINGS, OR WITHIN THE SPECIFICATIONS, MUST BE BROUGHT TO THE ATTENTION OF THE ARCHITECT AND ENGINEER DURING THE BIDDING PROCESS IN TIME TO PERMIT CLARIFICATION BY ADDENDUM. IF INCONSISTENCIES, DISCREPANCIES OR CONTRADICTIONS IN THE CONTRACT DOCUMENTS ARE DISCOVERED AFTER THE CLOSE OF BIDDING QUESTIONS, THE CONTRACTOR MUST BE DEEMED BY SUBMITTAL OF THEIR BID, TO HAVE BID THE MOST COSTLY AS TO LABOR, MATERIALS, DURATION, SEQUENCE AND METHOD OF CONSTRUCTION TO PROVIDE THE WORK.

6. THESE STRUCTURAL DRAWINGS ARE ISSUED ON THE DATE INDICATED FOR THE PURPOSE DESIGNATED. THESE DRAWINGS MUST NOT BE ISSUED OR RELEASED FOR ANY OTHER PURPOSE WITHOUT THE WRITTEN AUTHORIZATION OF THE STRUCTURAL ENGINEER OF RECORD.

7. DETAILS LABELED "TYPICAL DETAIL" WITHIN THE DOCUMENTS APPLY TO SITUATIONS ON THE PROJECT THAT MAY OCCUR THROUGHOUT THE PROJECT. SUCH DETAILS APPLY WHETHER OR NOT THE DETAIL IS SPECIFICALLY REFERENCED AT EACH INSTANCE. NOTIFY ENGINEER IF CLARIFICATIONS ARE REQUIRED REGARDING THE APPLICABILITY OF THE "TYPICAL DETAIL."

8. DESIGN CRITERIA:

CLASSIFICATION OF BUILDING
- RISK CATEGORY . . . III

SUPERIMPOSED ROOF DEAD LOADS - UNIFORM:
- INSULATION AND ROOF MEMBRANE . . . 3 PSF
- CEILING . . . 2 PSF
- DUCTS, LIGHTS, MISC. MECHANICAL . . . 3 PSF
- SOLAR PANEL ALLOWANCE . . . 10 PSF

SUPERIMPOSED FLOOR DEAD LOADS - UNIFORM:
- FLOOR FINISH . . . 3 PSF
- CEILING . . . 2 PSF
- DUCTS, LIGHTS, MISC. MECHANICAL . . . 3 PSF

LIVE LOADS - UNIFORM:
- SLAB ON GRADE . . . 100 PSF
- FLOOR . . . 80 PSF
- ROOF . . . 20 PSF
- CLASSROOMS . . . 40 PSF
- OFFICES . . . 50 PSF
- PARTITION ALLOWANCE . . . 15 PSF
- BALCONIES AND DECKS . . . 100 PSF

- STORAGE . . . 125 PSF
- MECHANICAL SPACE . . . 150 PSF
- STAIRWAYS . . . 100 PSF

LIVE LOAD REDUCTION OF THE UNIFORMLY DISTRIBUTED FLOOR LIVE LOADS HAS BEEN UTILIZED WHERE PERMITTED BY CODE.

LIVE LOADS - CONCENTRATED:
- ROOFS . . . 300#

UNLESS OTHERWISE NOTED, CONCENTRATED LOADS ARE APPLIED UNIFORMLY OVER 2'-6" x 2'-6" AREA.

RAIN LOADS:
- RAIN INTENSITY (15 MINUTE) . . . 6.25 IN/HR

SNOW LOADS:
- GROUND SNOW LOAD (Pg) . . . 15 PSF
- SLOPED ROOF LOAD (Pf) . . . 11 PSF
- IMPORTANCE FACTOR (Is) . . . 1.1
- THERMAL FACTOR (Ct) . . . 1.0
- EXPOSURE FACTOR (Ce) . . . 1.0
- DRIFT SURCHARGE (Pd) . . . REF PLAN

GENERAL NOTES (CONT):

WIND LOADS:
- BASIC WIND SPEED (Vult) . . . 125 MPH
- ALLOWABLE STRESS DESIGN WIND SPEED (Vasd) . . . 97 MPH
- EXPOSURE CATEGORY . . . B
- INTERNAL PRESSURE COEFFICIENT . . . ±0.18
- COMPONENT AND CLADDING PRESSURES:
  - WALLS, ZONE 5 (10 SF) . . . 29 PSF
  - ROOF, ZONE 3 (10 SF) . . . 56 PSF
- ULTIMATE WIND BASE SHEARS (FOR MWFRS):
  - Vx . . . 24 KIPS
  - Vy . . . 127 KIPS

SEISMIC LOADS:
- SITE CLASSIFICATION . . . C
- SEISMIC DESIGN CATEGORY . . . A
- IMPORTANCE FACTOR (IE) . . . 1.25
- SPECTRAL RESPONSE ACCELERATIONS:
  - S_S . . . 0.112 S_1 . . . 0.057
  - S_{MS} . . . 0.146 S_{M1} . . . 0.085
  - S_{DS} . . . 0.097 S_{D1} . . . 0.057
- ANALYSIS PROCEDURE . . . EQUIVALENT LATERAL FORCE

LATERAL FORCE RESISITNG SYSTEM
- PARK CENTER . . . STEEL SYSTEMS NOT SPECIFICALLY DETAILED FOR SEISMIC RESISTANCE
- RESPONSE MODIFICATION COEFFICIENT (R) . . . 3.0
- SEISMIC RESPONSE COEFFICIENT (Cs) . . . 0.04
- ULTIMATE SEISMIC BASE SHEAR (V) . . . 29 KIPS

LATERAL DESIGN CONTROL
- CONTROLLING LATERAL LOADS . . . WIND

SHOP DRAWINGS AND SUBMITTALS:

1. SHOP DRAWINGS AND SUBMITTALS MUST BEAR THE CONTRACTOR'S REVIEW STAMP WITH CHECKER'S INITIALS BEFORE BEING SUBMITTED TO THE ARCHITECT FOR APPROVAL.

2. WHEN THE CONTRACTOR HAS BEEN AUTHORIZED TO USE THE ARCHITECT'S AND / OR ENGINEER'S DRAWINGS AS SHOP DRAWINGS, THE CONTRACTOR MUST REMOVE ALL TITLE BLOCKS, PROFESSIONAL SEALS, AND ANY OTHER REFERENCE TO THE ARCHITECT AND / OR ENGINEER FROM THAT SHOP DRAWING.

SITE PREPARATION, CONTROLLED FILL AND SURCHARGE NOTES:

1. OBTAIN AND BECOME THOROUGHLY FAMILIAR WITH THE CONDITIONS AND RECOMMENDATIONS DESCRIBED IN THE SUBSURFACE EXPLORATION AND GEOTECHNICAL ENGINEERING REPORT. THIS REPORT IS NOT A PART OF THE CONTRACT DOCUMENTS, AND MAY NOT BE REPRESENTATIVE OF ALL SITE CONDITIONS WHICH MAY BE ENCOUNTERED.

2. SITE PREPARATION AND CONTROLLED FILL MUST INCLUDE THE AREA ENCLOSED BY A LINE DRAWN 5 FEET OUTSIDE THE BUILDING FOOTPRINT.

3. REMOVE ALL VEGETATION, ROOT MAT, TOPSOIL, ASPHALT PAVING AND AGGREGATE BASE MATERIAL. BASE BID ON 10 INCHES AVERAGE DEPTH.

4. THE EXPOSED SUBGRADE MUST BE PROOF ROLLED WITH A LARGE RUBBER-TIRED ROLLER OR LOADED DUMP TRUCK; PERFORM AT LEAST TWO PASSES IN EACH OF TWO PERPENDICULAR DIRECTIONS.

5. EXCAVATE SOFT SPOTS REVEALED BY PROOF ROLLING AS DIRECTED.

6. PRIOR TO PLACEMENT OF ANY FILL MATERIAL, SETTLEMENT PLATES MUST BE INSTALLED ON THE PREPARED SUBGRADE. SEE PLAN FOR LOCATIONS AND DETAILS.

7. FILL WITH SATISFACTORY STRUCTURAL FILL MATERIALS TO THE SPECIFIED ELEVATIONS.

8. FILL MUST BE PLACED IN LOOSE LIFTS NOT EXCEEDING 8 INCHES, WHEN MECHANICAL COMPACTION EQUIPMENT IS USED OR 4 INCHES WHEN HAND COMPACTION EQUIPMENT IS USED AND MUST BE COMPACTED TO AT LEAST 95 PERCENT OF THE STANDARD PROCTOR MAXIMUM DRY DENSITY (ASTM D698).

9. PLACE SURCHARGE FILL IN ONE FOOT LOOSE LIFTS, UP TO THE SPECIFIED ELEVATION. THE DEPTH OF SURCHARGE IS BASED ON A SOIL UNIT WEIGHT OF 120 POUNDS PER CUBIC FOOT. FOR LESS DENSE MATERIALS, PROVIDE ADDITIONAL SURCHARGE OR PROVIDE COMPACTION AS REQUIRED TO YIELD THE EQUIVALENT TOTAL WEIGHT OF SURCHARGE.

10. THE CONTRACTOR MUST SECURE AND PAY FOR THE SERVICES OF A LICENSED LAND SURVEYOR TO MONITOR THE SETTLEMENT PLATES. ELEVATION READINGS MUST BE TAKEN ON THE SURFACE OF THE PLATE AND THE TOP OF THE BAR AT THE TIME OF INSTALLATION. SUBSEQUENT READINGS MUST BE OBTAINED ON TOP OF THE BAR A MINIMUM OF THREE TIMES PER WEEK DURING THE PLACEMENT OF ANY FILL, TWO TIMES PER WEEK FOR A PERIOD OF TWO WEEKS AFTER COMPLETION OF FILL, AND ONE TIME PER WEEK THEREAFTER.

11. DURATION OF THE READINGS MUST BE ASSUMED TO BE 90 DAYS AFTER COMPLETION OF THE FILL. SUBMIT ELEVATION READINGS TO THE ENGINEER ON A WEEKLY BASIS.

FOUNDATION NOTES:

1. FOUNDATIONS HAVE BEEN DESIGNED IN ACCORDANCE WITH THE RECOMMENDATIONS IN THE [SUBSURFACE EXPLORATION AND GEOTECHNICAL ENGINEERING REPORT PREPARED BY ESP ASSOCIATES, INC., DATED AUGUST 29, 2025.

2. FOUNDATIONS HAVE BEEN DESIGNED FOR A NET ALLOWABLE SOIL BEARING PRESSURE OF 2,500 PSF.

3. TOP OF FOOTING ELEVATIONS MUST BE A MINIMUM DEPTH OF 1'-0" BELOW LOWEST ADJACENT SOIL GRADE.

4. PRIOR TO PLACING FOUNDATION CONCRETE, ALL FOUNDATION EXCAVATIONS MUST BE INSPECTED BY THE OWNER'S GEOTECHNICAL TESTING AGENCY [SPECIAL INSPECTOR] TO EXPLORE THE EXTENT OF LOOSE, SOFT, EXPANSIVE, OR OTHERWISE UNSATISFACTORY SOIL MATERIAL AND TO VERIFY DESIGN BEARING PRESSURE. DIRECTION FOR CORRECTIVE ACTION WILL BE PROVIDED BY THE OWNER'S GEOTECHNICAL TESTING AGENCY [SPECIAL INSPECTOR] WHERE UNSATISFACTORY SOILS ARE PRESENT.

5. NO UNBALANCED BACKFILLING MUST BE DONE AGAINST MASONRY OR CONCRETE WALLS UNLESS WALLS ARE SECURELY BRACED AGAINST OVERTURNING, EITHER BY TEMPORARY CONSTRUCTION BRACING OR BY PERMANENT CONSTRUCTION.

6. CONTROL GROUNDWATER AND SURFACE RUNOFF THROUGHOUT THE CONSTRUCTION PROCESS. INUNDATION AND LONG TERM EXPOSURE OF BEARING SURFACES WHICH RESULT IN DETERIORATION OF BEARING MUST BE PREVENTED.

CAST-IN-PLACE CONCRETE NOTES:

1. CONCRETE MUST BE IN ACCORDANCE WITH AMERICAN CONCRETE INSTITUTE (ACI) 301 AND 318.

2. REINFORCING MATERIALS MUST BE AS STATED IN THE CONCRETE MIX DESIGN NOTES:
   A. REINFORCING BARS - ASTM A615, GRADE 60, DEFORMED.
   B. WELDED REINFORCING BARS - ASTM A706, GRADE 60.
   C. WELDED WIRE REINFORCEMENT - ASTM A1064, WELDED STEEL WIRE REINFORCEMENT; PROVIDE SHEET TYPE, ROLL TYPE IS NOT ACCEPTABLE.

3. ALL REINFORCING STEEL AND EMBEDDED ITEMS SUCH AS ANCHOR RODS AND WELD PLATES MUST BE ACCURATELY PLACED AND ADEQUATELY TIED AND SUPPORTED BEFORE CONCRETE IS PLACED TO PREVENT DISPLACEMENT BEYOND PERMITTED TOLERANCES.

4. CONCRETE COVER TO REINFORCING STEEL MUST EQUAL THE FOLLOWING, UNLESS OTHERWISE NOTED:
   A. SURFACES AGAINST EARTH ..... 3"
   B. SURFACES NOT CAST AGAINST EARTH, BUT EXPOSED TO EARTH OR WEATHER IN THE FINAL CONDITION
      #5 AND SMALLER ..... 1 1/2"
      #6 AND LARGER ..... 2"
   C. BEAMS, GIRDERS, COLUMNS, AND WALLS ABOVE FINISHED FIRST FLOOR ..... 1 1/2"
   D. ELEVATED SLABS ..... 3/4"

5. LAP CONTINUOUS REINFORCING STEEL 57 X BAR DIAMETER, TYPICAL UNLESS OTHERWISE NOTED.

6. DO NOT EMBED CONDUIT AND PIPING IN OR PENETRATE THROUGH CAST-IN-PLACE CONCRETE ELEMENTS UNLESS OTHER NOTED.

CONCRETE MIX DESIGN NOTES:

1. MIX DESIGNS COMPRESSIVE STRENGTHS (f'c) BASED ON 28 DAY DESIGN STRENGTH, UNLESS OTHERWISE NOTED.

2. CONCRETE NOT OTHERWISE NOTED:
   A. MINIMUM COMPRESSIVE STRENGTH (f'c) = 4000 PSI

3. FOUNDATIONS (SPREAD FOOTINGS, MAT FOOTINGS):
   A. EXPOSURE CLASS = ACI 318 F0, S0, W0, C1
   B. MINIMUM COMPRESSIVE STRENGTH (f'c) = 3,000PSI
   C. MAXIMUM W/CM = 0.5
   D. BLENDED HYDRAULIC CEMENT = ASTM C595 TYPE 1L
   E. SLUMP = 5" MAX PLUS OR MINUS 1", OR 8" MAX, PLUS OR MINUS 1" FOR CONCRETE WITH A VERIFIED SLUMP OF 3" PLUS OR MINUS 1" BEFORE ADDING HIGH-RANGE WATER-REDUCING OR PLASTICIZING ADMIXURE
   F. AIR CONTENT = NO REQUIREMENTS
   G. AGGREGATE = NORMAL WEIGHT, ¾" NOMINAL
   H. LIMIT WATER-SOLUBLE, CHLORIDE-ION CONTENT IN HARDENED CONCRETE TO 0.30 PERCENT BY WEIGHT OF CEMENT

4. INTERIOR FLOOR SLAB-ON-GRADE:
   A. EXPOSURE CLASS = ACI 318 F0, S0, W0, C0
   B. MINIMUM COMPRESSIVE STRENGTH (f'c) = 3,500PSI
   C. MAXIMUM W/CM = 0.5
   D. BLENDED HYDRAULIC CEMENT = ASTM C595 TYPE 1L
   E. SLUMP = 5" MAX PLUS OR MINUS 1", OR 8" MAX, PLUS OR MINUS 1" FOR CONCRETE WITH A VERIFIED SLUMP OF 3" PLUS OR MINUS 1" BEFORE ADDING HIGH-RANGE WATER-REDUCING OR PLASTICIZING ADMIXURE
   F. AIR CONTENT = DO NOT ALLOW AIR CONTENT IN TROWEL FINISHED FLOORS TO EXCEED 3%
   G. AGGREGATE = NORMAL WEIGHT, ¾" NOMINAL
   H. LIMIT WATER-SOLUBLE, CHLORIDE-ION CONTENT IN HARDENED CONCRETE TO 1.00 PERCENT BY WEIGHT OF CEMENT

5. INTERIOR CONCRETE COLUMNS AND WALLS:
   A. EXPOSURE CLASS = ACI 318 F0, S0, W0, C0
   B. MINIMUM COMPRESSIVE STRENGTH (f'c) = [5,000PSI][AS INDICATED]
   C. MAXIMUM W/CM = 0.45
   D. BLENDED HYDRAULIC CEMENT = ASTM C595 TYPE 1L(MS)A
   E. SLUMP = 5" MAX PLUS OR MINUS 1", OR 8" MAX, PLUS OR MINUS 1" FOR CONCRETE WITH A VERIFIED SLUMP OF 3" PLUS OR MINUS 1" BEFORE ADDING HIGH-RANGE WATER-REDUCING OR PLASTICIZING ADMIXURE
   F. AIR CONTENT = DO NOT ALLOW AIR CONTENT IN TROWEL FINISHED FLOORS TO EXCEED 3%
   G. AGGREGATE = NORMAL WEIGHT, ¾" NOMINAL
   H. LIMIT WATER-SOLUBLE, CHLORIDE-ION CONTENT IN HARDENED CONCRETE TO 1.00 PERCENT BY WEIGHT OF CEMENT

6. ELEVATED COMPOSITE CONCRETE SLABS (LIGHTWEIGHT):
   A. EXPOSURE CLASS = ACI 318 F0, S0, W0, C0
   B. MINIMUM COMPRESSIVE STRENGTH (f'c) = 4,000PSI
   C. MAXIMUM W/CM = 0.45
   D. CALCULATED EQUILIBRIUM UNIT WEIGHT: 115 PCF PLUS OR MINUS 3 PCF PER ASTM C567
   E. BLENDED HYDRAULIC CEMENT = ASTM C595 TYPE 1L
   F. SLUMP = 4" PLUS OR MINUM 1" OR 8" MAX, PLUS OR MINUS 1" FOR CONCRETE WITH A VERIFIED SLUMP OF 3" PLUS OR MINUS 1" BEFORE ADDING HIGH-RANGE WATER-REDUCING OR PLASTICIZING ADMIXURE
   G. AIR CONTENT = 5.5% PLUS OR MINUS 1.5% AT POINT OF DELIVERY
   H. AGGREGATE = LIGHTWEIGHT, ¾" NOMINAL

NORTH CAROLINA PROFESSIONAL SEAL 044996 ENGINEER SCOTT M. FRANCIS
07/27/2026

lynchmykins now IMEG
301 N WEST STREET, SUITE 105
RALEIGH, NC 27603
919.782.1833 www.imegcorp.com

IMEG RESERVES PROPRIETARY RIGHTS, INCLUDING COPYRIGHTS. TO THIS DRAWING AND THE DATA SHOWN THEREON. SAID DRAWING AND/OR DATA ARE THE EXCLUSIVE PROPERTY OF IMEG AND SHALL NOT BE USED OR REPRODUCED FOR ANY OTHER PROJECT WITHOUT THE EXPRESS WRITTEN APPROVAL AND PARTICIPATION OF IMEG. ©2025 IMEG CONSULTANTS CORP.

North Carolina Design Registration #F-1507

Susan Hatchell Landscape Architecture, PLLC
711 W. North Street, Raleigh, NC 27603
p: 919-838-9600 f: 919-838-9700

lynchmykins now IMEG
301 N WEST STREET, SUITE 105
RALEIGH, NC 27603
919.782.1833 www.imegcorp.com

GENERAL NOTES

LAKE MYRA COUNTY PARK
Wake County, NC

REVISIONS

Date07/27/2026

PC-S001

STRUCTURAL STEEL NOTES:

1. STRUCTURAL STEEL MUST BE IN ACCORDANCE WITH THE AMERICAN INSTITUTE OF STEEL CONSTRUCTION (AISC) 360.

2. STRUCTURAL STEEL FABRICATOR MUST PARTICIPATE IN THE AISC QUALITY CERTIFICATION PROGRAM AND BE A DESIGNATED AISC-CERTIFIED PLANT.

3. STRUCTURAL STEEL INSTALLER MUST PARTICIPATE IN THE AISC QUALITY CERTIFICATION PROGRAM AND BE A DESIGNATED AISC-CERTIFIED ERECTOR.

4. STRUCTURAL STEEL MUST COMPLY WITH THE FOLLOWING SPECIFICATIONS:
   A. STRUCTURAL STEEL SHAPES, PLATES AND BARS UNLESS OTHERWISE NOTED - ASTM A572, Fy = 50 KSI
   B. STRUCTURAL STEEL W-SHAPES - ASTM A992, Fy = 50 KSI
   C. HOLLOW STRUCTURAL SECTIONS (HSS):
      a. SQUARE & RECTANGULAR - ASTM A500, GRADE C, Fy = 50 KSI
      b. ROUND - ASTM A500, GRADE C, Fy = 46 KSI
   D. ANCHOR RODS - ASTM F1554, GRADE 55
   E. HIGH STRENGTH BOLTS - ASTM F3125, TYPE A325 (TYPICAL UON)
   F. FULLY PRETENSIONED BOLTS - ASTM F1852 (TWIST-OFF TYPE)
   G. WASHERS - ASTM F436
   H. NUTS - ASTM A563
   I. HEADED STUDS - ASTM A29, GRADE 1010 THROUGH 1020

5. UNLESS OTHERWISE NOTED, ALL REQUIRED DESIGN STRENGTHS AND REACTIONS INDICATED ARE BASED ON THE "LOADING COMBINATIONS USING STRENGTH DESIGN OR LOAD AND RESISTANCE FACTOR DESIGN" PER SECTION 1605.2 OF THE BUILDING CODE.

6. STRUCTURAL STEEL FRAME IS CONSIDERED AS UNRESTRAINED FOR FIRE PROTECTION PURPOSES.

7. ALL STEEL CONNECTIONS AND MEMBER REINFORCEMENT MUST BE DESIGNED BY FABRICATOR'S QUALIFIED PROFESSIONAL ENGINEER FOR LOADS INDICATED ON THE DRAWINGS, PER OPTION 3B OF ANSI/AISC 303 AND COMPLETE THE FOLLOWING:

   A. SUBMIT STRUCTURAL CALCULATIONS SIGNED AND SEALED BY THE QUALIFIED PROFESSIONAL ENGINEER REGISTERED IN THE NORTH CAROLINA RESPONSIBLE FOR THEIR PREPARATION.
   B. THE PROFESSIONAL ENGINEER RESPONSIBLE FOR CONNECTION DESIGN MUST REVIEW THE SHOP DRAWINGS PRIOR TO SUBMITTAL TO VERIFY THAT THE CONNECTIONS AS DETAILED ON THE SHOP DRAWINGS COMPLY WITH THE CONNECTION DESIGN REQUIREMENTS OF THE FINAL CALCULATIONS.
   C. A REVIEW LETTER, SIGNED AND SEALED BY THE PROFESSIONAL ENGINEER RESPONSIBLE FOR CONNECTION DESIGN MUST BE PROVIDED WITH THE SHOP DRAWINGS AND CALCULATION SUBMITTAL STATING THAT THIS REVIEW AND VERIFICATION HAS BEEN COMPLETED.

8. HIGH STRENGTH BOLTS MAY BE TIGHTENED TO THE "SNUG TIGHT" CONDITION, UNLESS OTHERWISE NOTED.

9. BOLTED CONNECTIONS MAY USE NON-STANDARD HOLES, EXCEPT IN THE FOLLOWING LOCATIONS:
   A. AXIAL CONNECTIONS IDENTIFIED ON PLAN.
   B. ALL FRAMING CONNECTIONS AT BRACED FRAMES AND MOMENT FRAMES.
   C. CONNECTIONS IDENTIFIED ON PLAN WITH FULL DEPTH STIFFENER PLATES.

10. PROVIDE ANGLE FRAMING AROUND OPENINGS LARGER THAN 6 INCHES IN ANY DIMENSION (INCLUDING ROOF DRAINS) TO SUPPORT STEEL DECK. REFERENCE PLANS AND TYPICAL DETAILS FOR SIZING REQUIREMENTS.

11. WELDING MUST BE IN ACCORDANCE WITH AWS D1.1, "STRUCTURAL WELDING CODE - STEEL." WELD ELECTRODES MUST BE E70XX LOW HYDROGEN. UNLESS OTHERWISE NOTED, PROVIDE CONTINUOUS FILLET WELDS WITH MINIMUM SIZE REQUIRED BY TABLE J2.4 AISC 360.

12. INSTALLATION OF HEADED COMPOSITE STUDS MUST CONFORM TO THE REQUIREMENTS OF AWS D1.1, SECTIONS 9.4 AND 9.5. HEADED COMPOSITE STUDS MUST BE TESTED IN ACCORDANCE WITH AWS D1.1, SECTIONS 9.6, 9.7, AND 9.8 BY A QUALIFIED TESTING AGENCY.

13. COORDINATE ALL MEMBER LOCATIONS, UNIT WEIGHTS, OPENING SIZES, AND CURB DIMENSIONS FOR MECHANICAL EQUIPMENT WITH THE ACTUAL EQUIPMENT FURNISHED.

14. SHOP PRIME STEEL SURFACES, EXCEPT THE FOLLOWING:

   A. SURFACES EMBEDDED IN CONCRETE OR MORTAR. EXTEND PRIMING OF PARTIALLY EMBEDDED MEMBERS TO A DEPTH OF 2 INCHES.
   B. SURFACES TO BE WELDED.
   C. SURFACES TO RECEIVE SPRAYED FIRE-RESISTIVE MATERIALS.
   D. GALVANIZED SURFACES.
   E. SURFACES ENCLOSED IN INTERIOR CONSTRUCTION.

15. CLEAN ALL STEEL SURFACES TO BE PAINTED. REMOVE LOOSE RUST, MILL SCALE, SPATTER, SLAG, OR FLUX DEPOSITS. PREPARE SURFACES IN ACCORDANCE WITH SSPC-SP3 SPECIFICATION AND STANDARD.

16. HOT-DIP GALVANIZE AFTER FABRICATION THE FOLLOWING:

   A. ANGLES AND PLATES SUPPORTING MASONRY IN EXTERIOR WALLS.
   B. LINTELS AND LINTEL ASSEMBLIES SUPPORTING MASONRY IN EXTERIOR WALLS.
   C. ALL STEEL EXPOSED TO WEATHER IN THE FINAL CONSTRUCTION.
   D. ITEMS IDENTIFIED AS GALVANIZED ON ARCHITECTURAL OR STRUCTURAL DRAWINGS.
   E. STEEL IN CONTACT WITH PT WOOD.

STRUCTURAL STEEL NOTES (CONT):

17. STEEL MEMBERS MUST BE SPLICED ONLY WHERE INDICATED.

18. LOCATE CONSTRUCTION JOINTS FOR SLABS ON METAL DECK MIDWAY BETWEEN BEAMS WHERE THE JOINT IS PARALLEL TO THE BEAM SPAN. LOCATE JOINTS WITHIN THE MIDDLE THIRD SPAN WHERE THE JOINT IS PERPENDICULAR TO THE BEAM SPAN. ANY STOP IN CONCRETE WORK MUST BE MADE WITH VERTICAL BULKHEADS, UNLESS OTHERWISE SHOWN. REINFORCING TO BE CONTINUOUS THROUGH JOINTS.

19. ALL STAIR LANDINGS, STAIRS, AND STAIR SUPPORTS TO BE DESIGNED BY STAIR MANUFACTURER. LAYOUT OF STAIRS, LANDINGS, HANDRAILS, ETC. SHALL COMPLY WITH ARCHITECTURAL DRAWINGS. STRUCTURAL DESIGN CALCULATIONS AND DRAWINGS STAMPED BY A REGISTERED ENGINEER SHALL BE SUBMITTED TO THE STRUCTURAL EOR FOR REVIEW OF LOADING. ARCHITECT AND STAIR MANUFACTURER ARE RESPONSIBLE TO REVIEW FOR CODE AND ADA COMPLIANCE. STAIR MANUFACTURER SHALL PROVIDE ALL POSTS AND CONNECTIONS TO SUPPORT STAIRS. POSTS AND HANGERS MUST BE LOCATED IN PARTITION WALLS AND LOAD THE STRUCTURE CONCENTRICALLY.

ROUGH CARPENTRY NOTES:

1. ROUGH CARPENTRY MUST BE IN ACCORDANCE WITH THE AMERICAN WOOD COUNCIL (AWC) "NATIONAL DESIGN SPECIFICATION FOR WOOD CONSTRUCTION."

2. UNLESS OTHERWISE NOTED, USE 'COMMON' NAILS AND ALL NAILING MUST CONFORM TO THE "FASTENING SCHEDULE" TABLE 2304.10.1 OF THE BUILDING CODE.

3. WOOD FRAMING MEMBERS MUST COMPLY WITH PS 20 "AMERICAN SOFTWOOD LUMBER STANDARD" AND THE FOLLOWING REQUIREMENTS:
   A. MOISTURE CONTENT - SEASONED, WITH 19 PERCENT MAXIMUM MOISTURE CONTENT.
   B. GRADE - NO. 2, OR BETTER UNLESS OTHERWISE NOTED.
   C. SPECIES - SOUTHERN PINE GRADED UNDER SPIB RULES].

4. ALL WOOD FRAMING MEMBERS PERMANENTLY EXPOSED TO THE WEATHER AND ALL SILL PLATES IN CONTACT WITH CONCRETE MUST BE PRESERVATIVE-TREATED. REFER TO THE SPECIFICATIONS.

5. STEEL PLATE CONNECTORS MUST COMPLY WITH ASTM A 36 SPECIFICATIONS (Fy= 36 KSI). BOLTS CONNECTING WOOD MEMBERS MUST COMPLY WITH ASTM A307 COMMON STEEL BOLTS, AND MUST BE 1/2 INCH DIAMETER, UNLESS OTHERWISE NOTED.

6. METAL FRAMING ANCHORS, HOLD DOWNS, HURRICANE TIES, HANGERS, ETC. MUST COMPLY WITH ASTM A653 AND BE CAPABLE OF SUPPORTING THE REACTIONS SHOWN. WHERE PRODUCTS OF A SPECIFIC MANUFACTURER ARE SHOWN, EQUAL PRODUCTS OF ANOTHER MANUFACTURER MAY BE USED IF APPROVED.

7. PROVIDE BRIDGING FOR ALL FLOOR JOISTS MAXIMUM SPACING MUST BE 8'-0", UNLESS OTHERWISE NOTED.

8. PROVIDE DOUBLE JOISTS UNDER ALL PARTITIONS WHICH RUN PARALLEL WITH JOISTS, AND UNDER ALL CONCENTRATED LOADS FROM FLOORS ABOVE UNLESS OTHERWISE INDICATED. PROVIDE MULTIPLE STUDS WHERE INDICATED ON THE PLANS.

9. PROVIDE HEADERS OF THE SAME CROSS SECTION AS JOISTS OR RAFTERS TO FRAME AROUND ALL OPENINGS TO SUPPORT SHEATHING, UNLESS OTHERWISE NOTED OR DETAILED ON THE DRAWINGS.

10. UNLESS OTHERWISE NOTED, ATTACH BLOCKING AND NAILERS TO STEEL FRAMING USING 3/16 INCH DIAMETER POWDER ACTUATED FASTENERS AT 24 INCHES ON CENTER OR 1/2 INCH DIAMETER BOLTS AT 48 INCHES ON CENTER. STAGGER FASTENERS TO ALTERNATE SIDES OF BEAM WEB.

11. WHERE MULTIPLE FRAMING MEMBERS ARE INDICATED, SCAB CONTINGENT MEMBERS TOGETHER WITH 16d NAILS AT 12 INCHES ON CENTER, ALTERNATING AT 2 INCHES FROM EACH EDGE.

12. ALL CONNECTION HARDWARE IN CONTACT WITH PRESERVATIVE TREATED WOOD MUST BE HOT-DIP GALVANIZED COATED.

13. POWDER ACTUATED FASTENERS (PAF) MUST HAVE A MINIMUM ALLOWABLE CAPACITY INTO THE BASE MATERIAL AS FOLLOWS UNLESS OTHERWISE NOTED:
   A. STEEL: SHEAR = 600 LBS
      TENSION = 250 LBS
   B. CONCRETE: SHEAR = 260 LBS
      TENSION = 255 LBS

STRUCTURAL DELEGATED DESIGN ELEMENT NOTES:

1. THE FOLLOWING BUILDING ELEMENTS REQUIRE DELEGATED DESIGN AND ENGINEERING BY A SPECIALTY STRUCTURAL ENGINEER:
   A. METAL STAIRS
   B. GLAZING ASSEMBLY CONNECTIONS TO THE STRUCTURE
   C. COLD-FORMED METAL FRAMING (CFMF)
   D. STRUCTURAL STEEL CONNECTIONS
   E. PRE-FABRICATED CANOPIES AND AWNINGS
   F. TEMPORARY SHORING AND/OR EXCAVATION SUPPORT
   G. MECHANICAL, ELECTRICAL, AND PLUMBING SUPPORTS AND DISTRIBUTIONS SYSTEMS, INCLUDING BRACING AND ATTACHMENTS

   REFERENCE SPECIFICATIONS FOR COMPLETE REQUIREMENTS

2. SUBMIT COMPLETE CALCULATIONS AND SHOP DRAWINGS, SIGNED AND SEALED BY THE PROFESSIONAL ENGINEER REGISTERED IN THE STATE OF NORTH CAROLINA RESPONSIBLE FOR THE DESIGN, INCLUDING DESIGN LOADINGS AND REACTIONS APPLIED TO THE SUPPORTING STRUCTURE. INCLUDE A SUMMARY OF THE CONTROLLING LOAD CASES FOR EACH LOCATION.

3. IN ADDITION TO THEIR OWN DEAD WEIGHT AND THE DEAD LOADS SHOWN OR INDICATED IN THE DRAWINGS, MEMBERS MUST BE DESIGNED TO SUPPORT THE LOADS INDICATED IN THE GENERAL NOTES.

4. CONNECTION DETAILS SHOWN ARE SCHEMATIC ONLY. ALL CONNECTIONS MUST BE DESIGNED AND DETAILED BY THE MANUFACTURER TO SUIT THE SPECIFIED LOADS. CONNECTIONS MUST ACCOUNT FOR THERMAL MOVEMENT, DEFLECTION, CREEP, MANUFACTURING TOLERANCES, AND ERECTION TOLERANCES. DETAIL ALL CONNECTIONS ON SHOP DRAWINGS.

5. THE CONTRACTOR MUST BE RESPONSIBLE FOR THE COORDINATION OF ALL SPECIALTY STRUCTURAL ELEMENTS AND COST ASSOCIATED WITH A CONTRACTOR INITIATED CHANGE IN BUILDING STRUCTURE, INCLUDING CONSTRUCTION COSTS AND RE-ENGINEERING COSTS.

STEEL DECK NOTES:

1. STEEL DECK MUST BE IN ACCORDANCE WITH THE AMERICAN IRON AND STEEL INSTITUTE (AISI), "NORTH AMERICAN SPECIFICATION FOR THE DESIGN OF COLD-FORMED STEEL STRUCTURAL MEMBERS" AND THE STEEL DECK INSTITUTE (SDI), "DESIGN MANUAL FOR COMPOSITE DECKS, FORM DECKS, AND ROOF DECKS."

2. STEEL DECK INSTALLATION MUST COMPLY WITH THE FOLLOWING:
   A. ROOF DECK: 1 1/2" x 22 GAGE [TYPE 'B'] [TYPE 'F'] [TYPE 'N'] [GALVANIZED] [PAINTED] [CELLULAR] [NON-CELLULAR]. UNLESS OTHERWISE NOTED, ATTACH DECK TO SUPPORTS WITH 5/8 INCH DIAMETER PUDDLE WELDS IN ALL RIBS WHERE END LAPS OCCUR AND AT [12] [16] INCHES ON CENTER ALONG SUPPORTS [WITH A 36/4 PATTERN]. FASTEN SIDE LAPS WITH #10 SELF-TAPPING HEX HEAD SCREWS AT [1/3] POINTS BETWEEN SUPPORTS. FASTEN EDGEMOST DECK PANEL TO STEEL FRAMING WITH 5/8 INCH DIAMETER PUDDLE WELDS AT SAME SPACING AS SIDELAP FASTENERS.
   B. COMPOSITE DECK: [3"] [2"] [1 1/2"] x [__] GAGE [GALVANIZED]. UNLESS OTHERWISE NOTED, ATTACH DECK TO SUPPORTS WITH 5/8 INCH DIAMETER PUDDLE WELDS AT 12 INCHES ON CENTER. FASTEN SIDELAPS WITH #10 SELF-TAPPING HEX HEAD SCREWS AT [1/3] POINTS BETWEEN SUPPORTS. FASTEN EDGEMOST DECK PANEL TO STEEL FRAMING WITH 5/8 INCH DIAMETER PUDDLE WELDS AT SAME SPACING AS SIDELAP FASTENERS.

3. STEEL DECK MUST BE INSTALLED PERPENDICULAR TO SUPPORTS AND MUST HAVE A MINIMUM OF THREE CONTINUOUS SPANS. ENDLAPS MUST ONLY OCCUR AT SUPPORTS.

4. WELDING MUST BE IN ACCORDANCE WITH AWS D1.3 "STRUCTURAL WELDING CODE - SHEET STEEL".

5. PERMANENT SUSPENDED LOADS MUST NOT BE SUPPORTED BY STEEL ROOF DECK.

6. STEEL DECK SCHEDULED TO RECEIVE SPRAYED-ON FIREPROOFING MUST BE GALVANIZED.

7. SHEAR CONNECTORS FOR COMPOSITE FLOOR SYSTEMS SIZE AND LENGTHS MUST BE PER TYPICAL DETAILS AND CONFORM AS SPECIFIED IN "STRUCTURAL STEEL NOTES".

WOOD DECK NOTES:

1. ROOF DECKING SHALL BE AS NOTED ON PLANS, TONGUE AND GROOVE CONTINUOUS LAY UP (NO LAPS).

2. ALL EXTERIOR EXPOSED STRUCTURAL WOOD DECKING AND BLOCKING, AND SHEATHING IS TO BE EXTERIOR GRADE PRESSURE PRESERVATIVE TREATED, MIN. RETENTION 0.25 PCF.

3. WOOD DECKING TO BE STRESS RATED DOUG FIR OR SPRUCE-PINE-FIR #1 OR BETTER.

4. SCREW LENGTH TO FIT APPLICATION. ALL SCREWS SHALL PENETRATE A MINIMUM OF 1 3/4" BUT NOT MORE THAN THE FULL THICKNESS OF THE MEMBER. INSTALL PER MANUFACTURER'S INSTRUCTIONS. NOTE: SIMPSON STRONG DRIVE SCREWS ARE DEFINED AS SELF-TAPPING. OTHER SCREWS TYPES MAY REQUIRE PRE-DRILLING. MINIMUM SCREW/BOLT SIZE #12, U.O.N.

5. STRUCTURAL MEMBERS WHOSE STRENGTH IS IMPAIRED BY IMPROPER CUTTING, DRILLING, OR EXCESSIVE DEFECTS SHALL BE REPLACED OR REINFORCED IN A MANNER ACCEPTABLE TO THE ARCHITECT.

6. FASTEN WOOD DECKING TO SUPPORTS WITH NOT LESS THAN #14 SCREWS AT 4" O.C.

7. WOOD STRUCTURAL PANELS (WSP) MUST COMPLY WITH PS 1 "U.S. PRODUCT STANDARD FOR CONSTRUCTION AND INDUSTRIAL PLYWOOD" FOR PLYWOOD CONSTRUCTION PANELS AND THE FOLLOWING REQUIREMENTS:
   A. EXTERIOR WALL SHEATHING, SIZE INDICATED ON THE DRAWINGS APA RATED SHEATHING, EXPOSURE 1 DURABILITY CLASSIFICATION.

8. FIELD TREAT ALL CUTS AND ABRASIONS IN TREATED TIMBERS IN ACCORDANCE WITH THE AMERICAN WOOD PRESERVERS ASSOCIATION STANDARD M4. TRIM ALL CUTS AND ABRASIONS BEFORE FIELD TREATMENT. COAT ALL DEPRESSIONS OR OPENINGS AROUND BOLT HOLES, JOINTS OR GAPS INCLUDING RECESSES FORMED BY COUNTER BORING, WITH PRESERVATIVE TREATMENT USED FOR TIMBER

9. UNLESS OTHERWISE NOTED, ATTACHED BLOCKING AND NAILERS TO THE STEEL FRAMING USING 3/16 INCH DIAMETER POWDER ACTUATED FASTENERS AT 24 INCHES ON CENTER, STAGGER FASTENERS AT ALTERNATE SIDES OF BEAM WEB.

10. WHERE MULTIPLE FRAMING MEMBERS ARE INDICATED: SCAB CONTINGENT MEMBERS TOGETHER WITH 16d NAILS AT 12 INCHES ON CENTER, ALTERNATING AT 2 INCHES FROM EACH EDGE.

Susan Hatchell
Landscape Architecture, PLLC
711 W. North Street, Raleigh, NC 27603
p: 919-838-9600 f: 919-838-9700

lynchmykins now IMEG
301 N WEST STREET, SUITE 105
RALEIGH, NC 27603
919.782.1833 www.imegcorp.com

GENERAL NOTES

LAKE MYRA COUNTY PARK
Wake County, NC

NORTH CAROLINA PROFESSIONAL SEAL 044996 ENGINEER SCOTT M. FRANCIS
07/27/2026

lynchmykins now IMEG
301 N WEST STREET, SUITE 105
RALEIGH, NC 27603
919.782.1833 www.imegcorp.com

IMEG RESERVES PROPRIETARY RIGHTS, INCLUDING COPYRIGHTS, TO THIS DRAWING AND THE DATA SHOWN THEREON. SAID DRAWING AND/OR DATA ARE THE EXCLUSIVE PROPERTY OF IMEG AND SHALL NOT BE USED OR REPRODUCED FOR ANY OTHER PROJECT WITHOUT THE EXPRESS WRITTEN APPROVAL AND PARTICIPATION OF IMEG. ©2025 IMEG CONSULTANTS CORP.

North Carolina Design Registration #F-1507

REVISIONS

Date07/27/2026

PC-S002

POST-INSTALLED ANCHOR NOTES:

1. ANCHORS TO BE POST-INSTALLED ONLY WHERE INDICATED ON CONSTRUCTION DOCUMENTS. ANY SUBSTITUTE OF CAST-IN ANCHOR TO POST-INSTALLED ANCHORS MUST BE SUBMITTED AS A REQUEST FOR DEVIATION TO THE ENGINEER OF RECORD PRIOR TO CONSTRUCTION.

2. ALL POST INSTALLED ANCHORS INDICATED ON THE DRAWINGS ARE BY HILTI, INC, AND MUST BE CONSIDERED THE BASIS OF DESIGN PRODUCT. WHERE NOT EXPLICITLY INDICATED IN THE DRAWINGS, THE FOLLOWING ANCHORS/ADHESIVES MUST BE USED:
   A. ANCHORAGE TO CONCRETE
      1. ADHESIVE ANCHORS FOR CRACKED AND UNCRACKED CONCRETE USE:
         a. HILTI HIT-HY 200 SAFE SET SYSTEM WITH HILTI HOLLOW DRILL BIT (TE-CD OR TE-YD) AND VC 20/40 VACUUM SYSTEM (VC 20-U OR VC40U) WITH STEEL THREADED ROD PER ICC ESR-3187.
      2. SCREW ANCHORS FOR CRACKED AND UNCRACKED CONCRETE USE:
         a. HILTI KWIK HUS EZ SCREW ANCHORS PER ICC ESR-3027.
   B. REBAR DOWELING INTO CONCRETE
      1. ADHESIVE ANCHORS FOR CRACKED AND UNCRACKED CONCRETE USE:
         a. HILTI HIT-HY 200 SAFE SET SYSTEM WITH HILTI HOLLOW DRILL BIT (TE-CD OR TE-YD) AND VC 20/40 VACUUM SYSTEM (VC 20-U OR VC 40-U) WITH CONTINUOUSLY DEFORMED REBAR PER ICC ESR-3187.
   C. ANCHORAGE TO SOLID GROUTED MASONRY
      1. ADHESIVE ANCHORS USE:
         a. HILTI HIT-HY 270 MASONRY ADHESIVE ANCHORING SYSTEM (ICC PENDING).
         b. STEEL ANCHOR ELEMENT MUST BE HILTI HAS-E CONTINUOUSLY THREADED ROD.
      2. MECHANICAL ANCHORS USE:
         a. HILTI KWIK HUS EZ SCREW ANCHORS PER ICC ESR 3056.
   D. ANCHORAGE TO HOLLOW / MULTI-WYTHE MASONRY
      1. ADHESIVE ANCHORS USE:
         a. HILTI HIT-HY 270 MASONRY ADHESIVE ANCHORING SYSTEM PERICCESR-3342.
         b. STEEL ANCHOR ELEMENT MUST BE HILTI HAS-E CONTINUOUSLY THREADED ROD OR CONTINUOUSLY DEFORMED STEEL REBAR.
         c. THE APPROPRIATE SIZE SCREEN TUBE MUST BE USED PER ADHESIVE MANUFACTURER'S RECOMMENDATION.

3. ALTERNATE POST INSTALLED ANCHOR PRODUCTS MAY BE SUBMITTED TO THE ENGINEER FOR REVIEW AND POSSIBLE APPROVAL. ALL SUBSTITUTION REQUESTS MUST BE ACCOMPANIED BY AN ICC ESR SHOWING COMPLIANCE WITH THE RELEVANT BUILDING CODE FOR SEISMIC USES, LOAD RESISTANCE, INSTALLATION CATEGORY, AND COMPREHENSIVE INSTALLATION INSTRUCTIONS. ADHESIVE ANCHOR EVALUATION WILL ALSO CONSIDER CREEP, IN-SERVICE TEMPERATURE AND INSTALLATION TEMPERATURE. ALTERNATE PRODUCTS MAY REQUIRE MODIFICATIONS TO ANCHOR DIAMETER, SPACING, AND EMBEDMENT.

4. INSTALL ANCHORS PER THE MANUFACTURER INSTRUCTIONS, AS INCLUDED IN THE ANCHOR PACKAGING.

5. THE CONTRACTOR MUST ARRANGE FOR AN ANCHOR MANUFACTURER'S REPRESENTATIVE TO PROVIDE ONSITE INSTALLATION TRAINING FOR ALL OF THEIR ANCHORING PRODUCTS SPECIFIED. THE STRUCTURAL ENGINEER OF RECORD MUST RECEIVE DOCUMENTED CONFIRMATION THAT ALL OF THE CONTRACTOR'S PERSONNEL WHO INSTALL ANCHORS ARE TRAINED PRIOR TO THE COMMENCEMENT OF ANCHOR INSTALLATION.

6. ANCHOR CAPACITY IS DEPENDANT UPON SPACING BETWEEN ADJACENT ANCHORS AND PROXIMITY OF ANCHORS TO EDGE OF CONCRETE. INSTALL ANCHORS IN ACCORDANCE WITH SPACING AND EDGE CLEARANCES INDICATED ON THE DRAWINGS.

7. EXISTING REINFORCING BARS IN THE CONCRETE STRUCTURE MAY CONFLICT WITH SPECIFIC ANCHOR LOCATIONS. UNLESS NOTED ON THE DRAWINGS THAT THE BARS CAN BE CUT, THE CONTRACTOR MUST LOCATE THE POSITION OF THE REINFORCING BARS AT THE LOCATIONS OF THE CONCRETE ANCHORS, BY FERROSCAN OR GPR.

8. ALL POST INSTALLED ANCHORS REQUIRE CONTINUOUS INSPECTIONS BY THE OWNER'S MATERIALS TESTING AGENCY TO VERIFY INSTALLATION HAS BEEN PERFORMED IN ACCORDANCE WITH THE MANUFACTURER'S WRITTEN INSTRUCTIONS.

CONCRETE MASONRY NOTES:

1. CONCRETE MASONRY MATERIALS AND CONSTRUCTION MUST CONFORM TO THE AMERICAN CONCRETE INSTITUTE (ACI) "BUILDING CODE REQUIREMENTS FOR MASONRY STRUCTURES" (TMS 402 / ACI 530 / ASCE 5) AND "SPECIFICATIONS FOR MASONRY STRUCTURES" (TMS 602 / ACI 530.1 / ASCE 6).

2. CONCRETE MASONRY UNITS MUST CONFORM TO ASTM C90 AND MUST BE MADE WITH LIGHTWEIGHT AGGREGATE.

3. COMPRESSIVE STRENGTH OF MASONRY MUST BE DETERMINED BY THE UNIT STRENGTH METHOD AS SET FORTH IN ACI 530.1. THE NET AREA COMPRESSIVE STRENGTH OF MASONRY, f'm, MUST BE 2,000 PSI AT 28 DAYS.

4. MORTAR MUST BE TYPE 'M' OR 'S' AND MUST COMPLY WITH ASTM C270, PROPORTIONS OR PROPERTIES SPECIFICATION.

5. GROUT MUST COMPLY WITH EITHER THE PROPORTIONS OR PROPERTIES SPECIFICATION OF ASTM C476 AND AS FOLLOWS:
   A. PROPORTIONS SPECIFICATION: THIS MIX CANNOT CONTAIN ADMIXTURES. WATER MUST BE ADDED IN THE FIELD IN ORDER TO ACHIEVE A SLUMP OF 8-11 INCHES WHEN PLACED IN THE CONCRETE MASONRY UNITS. MORTAR, PEA-GRAVEL CONCRETE, OR "CHAT" MIXES ARE NOT ACCEPTABLE SUBSTITUTES FOR THE SPECIFIED GROUT.
   B. PROPERTIES SPECIFICATION: THIS MIX MUST BE PROPORTIONED TO OBTAIN A DOCUMENTED 28 DAY COMPRESSIVE STRENGTH OF 2,500 PSI, WITH 3/8" MAX AGGREGATE AND AN 8-11 INCH SLUMP WHEN PLACED IN THE CONCRETE MASONRY UNITS.

6. GROUT MUST COMPLY WITH EITHER THE PROPORTIONS OR PROPERTIES SPECIFICATION OF ASTM C476 AND THIS MIX MUST BE PROPORTIONED TO OBTAIN A DOCUMENTED 28 DAY COMPRESSIVE STRENGTH OF 8,000 PSI, WITH AN 8-11 INCH SLUMP WHEN PLACED IN THE CONCRETE MASONRY UNITS.

7. REINFORCING STEEL MUST COMPLY WITH ASTM A615, GRADE 60. SHOP FABRICATE REINFORCING BARS WHICH ARE SHOWN TO BE BENT OR HOOKED.

8. ALL BOND BEAMS, REINFORCED CELLS AND CELLS WITH EXPANSION BOLTS, EMBED PLATES OR OTHER ANCHORS AND ALL CELLS BELOW GRADE MUST BE GROUTED SOLID. GROUT PROCEDURE MUST COMPLY WITH ACI 530.1.

9. ALL CMU WALLS MUST BE REINFORCED CONTINUOUSLY FROM FOUNDATION TO TOP OF WALL. WHERE REINFORCING IS INTERRUPTED, OFFSET AND LAP ADDITIONAL BARS PER THE "TYPICAL OFFSET SPLICE AT MASONRY WALL DETAILS."

10. LAP ALL REINFORCING PER SCHEDULE BELOW, TYPICAL UNLESS OTHERWISE NOTED:

MASONRY LAP SCHEDULE

REINF SIZE	52 x BAR DIAMETER	72 x BAR DIAMETER
#4	26"	36"
#5	33"	45"
#6	39"	54"
#7	46"	63"
#8	52"	72"

11. PROVIDE MECHANICAL SPLICES FOR ALL #9 BARS AND LARGER AND FOR ALL BARS AT CONTRACTOR'S OPTION.

12. ALL NON-BEARING MASONRY WALLS MUST BE REINFORCED WITH #4 VERTICAL BARS AT 40 INCHES ON CENTER, TYPICAL UNLESS OTHERWISE NOTED.

13. PROVIDE REINFORCING STEEL DOWELS OF THE SAME SIZE AND SPACING AS VERTICAL REINFORCING FROM THE SUPPORTING STRUCTURE. [DOWELS MUST HAVE STANDARD ACI HOOKS.

14. PROVIDE STANDARD 9 GAGE TRUSS TYPE HORIZONTAL JOINT REINFORCING IN CMU WALLS AT 16 INCHES ON-CENTER VERTICALLY AND AT 8 INCHES ON-CENTER VERTICALLY AT PARAPETS. ADDITIONALLY PROVIDE IN THE TWO JOINTS IMMEDIATELY ABOVE AND BELOW ALL OPENINGS, EXTENDING A MINIMUM OF 2 FEET BEYOND THE JAMB ON EACH SIDE OF THE OPENING, EXCEPT AT CONTROL JOINTS.

15. PROVIDE VERTICAL CONTROL JOINTS AT 25 FEET ON-CENTER MAXIMUM, OR NOT MORE THAN 1.5 TIMES THE HEIGHT OF THE WALL AT CONTROL JOINTS. PROVIDE CONTINUOUS HORIZONTAL BOND BEAM REINFORCEMENT AS SHOWN IN THE SECTIONS AND DETAILS CONTINUOUS THROUGH CONTROL JOINTS. DO NOT PLACE PLACE GROUT CONTINUOUSLY AT CONTROL JOINTS.

16. DO NOT LOCATE CONTROL JOINTS WITHIN TWO FEET OF STEEL BEAM BEARING LOCATIONS.

17. PLACE GROUT WITH POUR HEIGHT NOT EXCEEDING 5 FEET. CONSOLIDATE EACH POUR BY MECHANICAL VIBRATION. RECONSOLIDATE AFTER INITIAL WATER LOSS AND SETTLEMENT OCCUR.

19. GROUT POUR HEIGHT MAY BE INCREASED WHERE THE FOLLOWING CONDITIONS ARE MET:
   A. LIMIT POUR HEIGHT BASED ON A MINIMUM WIDTH OF GROUT SPACE IN ACCORDANCE WITH TABLE 7 OF ACI 530.1 / ASCE 6 / TMS 602.
   B. PLACE GROUT IN LIFTS NOT EXCEEDING THE LIMITATIONS SPECIFIED IN ACE 530.1/ASCE 6/TMS 602.
   C. CONSOLIDATE EACH POUR BY MECHANICAL VIBRATION. RECONSOLIDATE AFTER INITIAL WATER LOSS AND SETTLEMENT HAS OCCURED.
   D. FORM A GROUT KEY BETWEEN POURS ACCORDING TO ACI 530.1 / ASCE 6 / TMS 602.
   E. PROVIDE AN INSPECTION PORT (CLEANOUT) AT EACH CELL TO BE GROUTED AT THE BASE OF EACH POUR.
   F. SUBMIT SHOP DRAWINGS DETAILING THE PROPOSED GROUTING PROCEDURE ALONG WITH (3) REFERENCES OF PREVIOUS SUCCESSFUL PROJECTS.

20. MASONRY SHALL BE CONSTRUCTED IN RUNNING BOND PATTERN AND ALL CORNERS TO BE TIED BY MASONRY BOND.

21. SUBMITTALS FOR CONCRETE MASONRY MUST INCLUDE THE FOLLOWING:
   A. PRODUCT DATA/MATERIAL CERTIFICATES: SUBMIT DATA AND CERTIFICATES FOR MASONRY UNITS, CEMENTITOUS MATERIALS, MORTAR ADMIXTURES, PRE-BLENDED DRY MORTAR MIXES, REINFORCING BARS, JOINT REINFORCEMENT, ANCHORS, TIES, AND METAL ACCESSORIES.
   B. REINFORCEMENT SHOP DRAWINGS: SHOW ELEVATIONS OF REINFORCED WALLS. MUST COMPLY WITH ACI DETAILING MANUAL: DETAIL BENDING, LAP LENGTHS, AND PLACEMENT OF UNIT MASONRY REINFORCING BARS.
   C. MIX DESIGNS: SUBMIT MIX DESIGNS FOR EACH TYPE OF MORTAR AND GROUT AND INCLUDE DESCRIPTION OF TYPE AND PROPORTIONS OF INGREDIENTS. INCLUDE TEST REPORTS FOR GROUT MIXES ACCORDING TO ASTM C1019
   D. SHOP DRAWINGS MUST INDICATE THE DATE OF THE STRUCTURAL DRAWINGS THAT WERE USED IN PREPARATION.

STATEMENT OF SPECIAL INSPECTION SERVICES

PROJECT:
LOCATION:
OWNER'S REPRESENTATIVE:
OWNER'S ADDRESS:

THIS STATEMENT OF SPECIAL INSPECTIONS IS SUBMITTED AS A CONDITION FOR PERMIT ISSUANCE IN ACCORDANCE WITH THE SPECIAL INSPECTION REQUIREMENTS OF THE 2018 NORTH CAROLINA STATE BUILDING CODE. IT INCLUDES A SCHEDULE OF SPECIAL INSPECTION SERVICES APPLICABLE TO THIS PROJECT, THE NAME OF THE SPECIAL INSPECTOR, THE IDENTITY OF OTHER APPROVED AGENCIES RETAINED FOR CONDUCTING SPECIAL INSPECTIONS, AND THE REQUIRED INSPECTOR QUALIFICATIONS. THIS STATEMENT OF SPECIAL INSPECTIONS WAS PREPARED BY THE FOLLOWING DESIGNERS OF RECORD:

STRUCTURAL	SCOTT FRANCIS		07/27/2026
	(Type or print name)	(Signature)	(Date)
ARCHITECTURAL			
	(Type or print name)	(Signature)	(Date)
MECHANICAL			
	(Type or print name)	(Signature)	(Date)
OTHER			
	(Type or print name)	(Signature)	(Date)

THE SPECIAL INSPECTOR MUST KEEP RECORDS OF ALL SPECIAL INSPECTIONS AND TESTS AND MUST FURNISH REPORTS TO THE STATE CONSTRUCTION OFFICE AND THE DESIGNERS OF RECORD. REPORTS MUST INDICATE IF THE WORK INSPECTED OR TESTED WAS OR WAS NOT COMPLETED IN CONFORMANCE WITH THE APPROVED CONSTRUCTION DOCUMENTS. DISCOVERED DISCREPANCIES MUST BE BROUGHT TO THE IMMEDIATE ATTENTION OF THE CONTRACTOR FOR CORRECTION. IF SUCH DISCREPANCIES ARE NOT CORRECTED, THE DISCREPANCIES MUST BE BROUGHT TO THE ATTENTION OF THE STATE CONSTRUCTION OFFICE AND THE DESIGNERS OF RECORD. THE SPECIAL INSPECTIONS PROGRAM DOES NOT RELIEVE THE CONTRACTOR OF HIS OR HER RESPONSIBILITIES.

INTERIM REPORTS MUST BE SUBMITTED TO THE STATE CONSTRUCTION OFFICE, OWNER, AND THE DESIGNERS OF RECORD.

INTERIM REPORT FREQUENCY: MONTHLY

A FINAL REPORT OF SPECIAL INSPECTIONS DOCUMENTING COMPLETION OF ALL REQUIRED SPECIAL INSPECTIONS, TESTING, AND CORRECTION OF ANY DISCREPANCIES SHOULD BE SUBMITTED PRIOR TO ISSUANCE OF A CERTIFICATE OF USE AND OCCUPANCY.

JOB SITE SAFETY AND MEANS AND METHODS OF CONSTRUCTION ARE SOLELY THE RESPONSIBILITY OF THE CONTRACTOR.

OWNER'S AUTHORIZATION — ACCEPTED FOR THE SCO BY:

(Signature) (Date) — (Signature) (Date)

COLUMN FOOTING SCHEDULE

MARK	SIZE			REINFORCING		REMARKS
	LENGTH	WIDTH	DEPTH	BOTTOM	TOP	
CF3	3' - 0"	3' - 0"	1'-0"	( ) #_ EW	-	-
CF4	4' - 0"	4' - 0"	1'-3"	(4) #5 EW	-	-
CF5	5' - 0"	5' - 0"	1'-3"	(5) #5 EW	-	-
CF6	6' - 0"	6' - 0"	1'-2"	(6) #6 EW	-	-
CF7	7' - 0"	7' - 0"	1'-2"	(8) #6 EW	-	-

WALL FOOTING SCHEDULE

MARK	SIZE		REINFORCING		REMARKS
	WIDTH	DEPTH	CONTINUOUS	TRANSVERSE	
WF2	2' - 0"	1'-0"	(3) #5 BOT	#4 AT 36" OC BOT	-
WF2.5	2' - 6"	1'-0"	(3) #5 BOT	#4 AT 36" OC BOT	-
WF3	3' - 0"	1'-0"	(4) #5 BOT	#4 AT 36" OC BOT	-
WF4	4' - 0"	1'-0"	(5) #5 BOT	#4 AT 36" OC BOT	-
WF6	6' - 0"	1'-0"	(7) #5 BOT	#4 AT 24" OC BOT	-
WF7	7' - 0"	1'-6"	(8) #6 TOP & BOT	#6 AT 12" OC TOP & BOT	-

NORTH CAROLINA PROFESSIONAL SEAL 044996 ENGINEER SCOTT M. FRANCIS
07/27/2026

lynchmykins now IMEG
301 N WEST STREET, SUITE 105
RALEIGH, NC 27603
919.782.1833 www.imegcorp.com

IMEG RESERVES PROPRIETARY RIGHTS, INCLUDING COPYRIGHTS, TO THIS DRAWING AND THE DATA SHOWN THEREON. SAID DRAWING AND/OR DATA ARE THE EXCLUSIVE PROPERTY OF IMEG AND SHALL NOT BE USED OR REPRODUCED FOR ANY OTHER PROJECT WITHOUT THE EXPRESS WRITTEN APPROVAL AND PARTICIPATION OF IMEG. ©2025 IMEG CONSULTANTS CORP.

North Carolina Design Registration #F-1507

Susan Hatchell Landscape Architecture, PLLC
711 W. North Street, Raleigh, NC 27603
p: 919-838-9600 f: 919-838-9700

lynchmykins now IMEG
301 N WEST STREET, SUITE 105
RALEIGH, NC 27603
919.782.1833 www.imegcorp.com

GENERAL NOTES

LAKE MYRA COUNTY PARK
Wake County, NC

REVISIONS

Date07/27/2026

PC-S003

DRAWINGS LEGEND

GENERAL ANNOTATIONS

SECTIONS

- X / SX = SECTION/DETAIL MARK
  - SECTION/DETAIL NUMBER/LETTER
  - SHEET NUMBER WHERE SECTION/DETAIL MARK IS DRAWN
- X / SX|SX = SECTION/DETAIL MARK
  - SECTION/DETAIL NUMBER/LETTER
  - SHEET NUMBER WHERE SECTION/DETAIL MARK IS DRAWN
  - SHEET NUMBER WHERE SECTION/DETAIL MARK IS CUT

COLUMNS

- GRID = COLUMN GRID MARK
- X = EXISTING COLUMN GRID MARK

GENERAL PLANS

- X = PLAN KEY NOTE MARK
- ± = FIELD VERIFY
- SL = DIRECTION OF SLOPE
- = CHANGE IN ELEVATION
- = CHANGE IN SLOPE

SHALLOW FOUNDATIONS

- SF SF / PIPE = PIPE CROSSING FOOTING
- = SLAB-ON-GRADE JOINT
- WFX = WALL FOOTING MARK
- CFX = COLUMN FOOTING MARK

DEEP FOUNDATIONS

- PCX = PILE CAP MARK
- GBX = GRADE BEAM MARK
- TPX = TEST PILE MARK

FLOOR AND ROOF FRAMING

- RTU-X XXXX# = MECHANICAL UNIT SUPPORTED ABOVE FRAMING (WEIGHT IN POUNDS) - COORD W/ MECH DWGS
- RTU-X XXXX# = MECHANICAL UNIT SUPPORTED BELOW FRAMING (WEIGHT IN POUNDS) - COORD W/ MECH DWGS
- = FLOOR / ROOF OPENING
- = WARP LINE OF ROOF DECK
- = HORIZONTAL BRIDGING
- = CROSS BRIDGING

ELEVATIONS

FOUNDATIONS

- (-X'-X") = TOP OF FOOTING ELEVATION MEASURED FROM REFERENCED FINISHED FLOOR ELEVATION = 0'-0"
- (-X'-X") = TOP OF PILE CAP / GRADE BEAM ELEVATION MEASURED FROM REFERENCED FINISHED FLOOR ELEVATION = 0'-0"
- <-X'-X"> = TOP OF EXISITNG FOOTING ELEVATION MEASURED FROM REFERENCED FINISHED FLOOR ELEVATION = 0'-0"
- X'-X" = TOP OF SLAB ELEVATION MEASURED FROM REFERENCED FINISHED FLOOR ELEVATION = 0'-0"

FLOORS AND ROOF

- BOD = +X'-X" = BOTTOM OF DECK ELEVATION MEASURED FROM REFERENCED FINISHED FLOOR ELEVATION = 0'-0"
- TOS = +X'-X" = TOP OF STEEL ELEVATION MEASURED FROM REFERENCED FINISHED FLOOR ELEVATION = 0'-0"
- BOS = +X'-X" = BOTTOM OF STEEL ELEVATION MEASURED FROM REFERENCED FINISHED FLOOR ELEVATION = 0'-0"
- TOM = +X'-X" = TOP OF MASONRY ELEVATION MEASURED FROM REFERENCED FINISHED FLOOR ELEVATION = 0'-0"
- TBE = +X'-X" = TRUSS BEARING ELEVATION MEASURED FROM REFERENCED FINISHED FLOOR ELEVATION = 0'-0"

STEEL

CONNECTIONS

- = MOMENT CONNECTION
- = AXIAL CONNECTION
- = FULL DEPTH STIFFENER CONNECTION
- = JOIST BOTTOM CHORD EXTENSION
- = BEAM BOTTOM FLANGE BRACE
- = BEAM SPLICE
- KB = KNUCKLED BEAM

COMPOSITE BEAMS

BEAM SIZE — W16x26 (36) [2"] — NUMBER OF HEADED STUDS

MOMENT REACTION (KIP-FT) — V 60 / M 20 / A 15

CAMBER

AXIAL REACTION (KIPS)

V 60 / M 20 / A 15 = COMPOSITE BEAM NOTATION

SHEAR REACTION (KIPS) IF GREATER THAN LOADS GIVEN IN "MINIMUM BEAM REACTION SCHEDULE"

MISC ANNOTATIONS

- SJ = JOIST SLIP CONNECTION
- SG = JOIST GIRDER SLIP CONNECTION
- SB = BEAM SLIP CONNECTION
- = JOIST GIRDER MOMENT MARK

CONCRETE

WALLS

- = BEARING WALL EXTENDING ABOVE FLOOR / ROOF
- = BEARING WALL TERMINATING BELOW FLOOR / ROOF
- = EXTERIOR WALL TERMINATING BELOW FLOOR / ROOF
- = CONCRETE SHEARWALL
- = CONCRETE FIREWALL
- W1 = WALL TYPE MARK

SLAB POST-TENSION STRANDS

F = XXX k
F = XX k/ft

(xx") (xx") (xx")

BANDED TENDON EFFECTIVE FORCE AFTER ALL LOSSES

DISTRIBUTED TENDON EFFECTIVE FORCE AFTER ALL LOSSES

STRESSING END

DEAD END ANCHOR

TENDON 'CGS' ABOVE SOFFIT AT SUPPORT AND CENTER SPAN

SLAB REINFORCING

CONCENTRATED MILD SLAB REINFORCING

(10) #5T x 15'-0"

- BAR SIZE
- BAR LOCATION (T = TOP, M = MID, B = BOT)
- LENGTH (IF NOT SHOWN, REF TYPICAL DETAIL)
- QUANTITY

EVENLY DISTRIBUTED MILD SLAB REINFORCING

#5T x 15'-0" AT 12" OC

- BAR SIZE
- BAR LOCATION (T = TOP, M = MID, B = BOT)
- SPACING
- LENGTH (IF NOT SHOWN, REF TYPICAL DETAIL)

SLAB REINFORCING

STUD RAIL MARK

COLUMN FACE - REF SCHEDULE (TYP)

F1 F2 F3 F4 SR1

MISC ANNOTATIONS

- CBX = CONCRETE BEAM MARK
- S-X = SLAB MARK / SPAN DIRECTION

MASONRY

WALLS

- = BEARING WALL EXTENDING ABOVE FLOOR / ROOF
- = BEARING WALL TERMINATING BELOW FLOOR / ROOF
- = NON-BEARING WALL BEARING ON FLOOR BELOW
- = EXTERIOR WALL TERMINATING BELOW FLOOR / ROOF
- = CMU SHEARWALL
- = CMU FIREWALL
- W1 = WALL TYPE MARK

STEEL LINTELS

- L-X = STEEL LINTEL MARK
- A = STEEL LINTEL BEARING PLATE MARK

WOOD

WALLS

- = BEARING WALL EXTENDING ABOVE FLOOR / ROOF
- = BEARING WALL TERMINATING BELOW FLOOR / ROOF
- = EXTERIOR WALL TERMINATING BELOW FLOOR / ROOF
- = WOOD SHEARWALL
- = HOLD-DOWN ANCHOR
- MSP-A = MULTIPLE STUD PACK
- SW1 X'-X" = SHEARWALL MARK
  - INDICATES SIDE OF WALL TO BE SHEATHED
  - LENGTH OF SHEATHING
  - SHEARWALL TYPE - REFERENCE SCHEDULE
- W1 = WALL TYPE MARK

MISC ANNOTATIONS

- T-X = TRUSS MARK

ABBREVIATIONS

AFF	ABOVE FINISHED FLOOR
ARCH	ARCHITECT
BD	BAR DIAMETER
BF	BRACED FRAME
BEJ	BUILDING EXPANSION JOINT
BLDG	BUILDING
BM	BEAM
BOD	BOTTOM OF DECK
BOS	BOTTOM OF STEEL
BOT, B	BOTTOM
BRG	BEARING
BTWN	BETWEEN
C TO C	CENTER TO CENTER
CFMF	COLD-FORMED METAL FRAMING
CJ	CONTROL JOINT
CL	CENTERLINE
CLR	CLEAR
CMU	CONCRETE MASONRY UNIT
COL	COLUMN
CONC	CONCRETE
CONN	CONNECTION
CONSTR	CONSTRUCTION
CONT	CONTINUOUS
COORD	COORDINATE
CTR	CENTER
CTRD	CENTERED
DBA	DEFORMED BAR ANCHOR
DBL	DOUBLE
DC	DIAPHRAGM CHORD
DCJ	DOWELED CONSTRUCTION JOINT
DIA, Ø	DIAMETER
DIST	DISTANCE
DJ	DOUBLE JOIST
DWGS	DRAWINGS
EA	EACH
EF	EACH FACE
EJ	EXPANSION JOINT
EL	ELEVATION
ELEV	ELEVATOR
EMBED	EMBEDMENT
EOD	EDGE OF DECK
EOS	EDGE OF SLAB
EQ	EQUAL
EW	EACH WAY
EXIST	EXISTING
EXP	EXPANSION
EXT	EXTERIOR
FD	FLOOR DRAIN
FDN	FOUNDATION
FO	FACE OF
FF EL	FINISHED FLOOR ELEVATION
FIN	FINISH
FIN FLR	FINISHED FLOOR
FOB	FACE OF BUILDING
FOC	FACE OF CONCRETE
FOM	FACE OF MASONRY
FOS	FACE OF SLAB/ STUD
FRMG	FRAMING
FTG	FOOTING
FS	FAR SIDE
FV, ±	FIELD VERIFY
GALV	GALVANIZED
GC	GENERAL CONTRACTOR
GEN	GENERAL
GR BM	GRADE BEAM
H	HIGH
HK	HOOK
HORIZ	HORIZONTAL
HSS	HOLLOW STRUCTURAL SECTION
HSA	HEADED STUD ANCHOR
HT	HEIGHT
HVY	HEAVY
INT	INTERIOR
JBE	JOIST BEARING ELEVATION
JT	JOINT
KCJ	KEYED CONSTRUCTION JOINT
KCJ	KEYED CONSTRUCTION JOINT
Ld	REBAR TENSION DEVELOPMENT LENGTH
Ldc	REBAR COMPRESSION DEVELOPMENT LENGTH
Ldh	HOOKED REBAR TENSION DEVELOPMENT LENGTH
Ls	REBAR TENSION SPLICE LENGTH
Lsc	REBAR COMPRESSION SPLICE LENGTH
L	LOW
LLH	LONG LEG HORIZONTAL
LLV	LONG LEG VERTICAL
LSH	LONG SIDE HORIZONTAL
LSV	LONG SIDE VERTICAL
LTWT	LIGHTWEIGHT
LWC	LIGHTWEIGHT CONCRETE
MAS	MASONRY
MATL	MATERIAL
MAX	MAXIMUM
MECH	MECHANICAL
MF	MOMENT FRAME
MFR	MANUFACTURER
MID	MIDDLE
MIN	MINIMUM
MOD	MODIFY
MOS	MIDDEPTH OF SLAB
NOM	NOMINAL
NS	NEAR SIDE
NTS	NOT TO SCALE
OC	ON CENTER
OPH	OPPOSITE HAND
OPNG	OPENING
PAF	POWDER ACTUATED FASTENER
PAR	PARALLEL
PC	PIECE
PEMB	PRE-ENGINEERED METAL BUILDING
PEN	PENETRATE, PENETRATION
PERP	PERPENDICULAR
PL	PLATE
PT	POST-TENSIONED (CONC) PRESSURE TREATED (WOOD)
R	RADIUS
REF	REFERENCE, REFER TO
REINF	REINFORCE, REINFORCED, REINFORCING
REQD	REQUIRED
REQMTS	REQUIREMENTS
SCHED	SCHEDULE
SF	STEPPED FOOTING
SGB	STEPPED GRADE BEAM
SIM	SIMILAR
SJ	SAWED JOINT
SL	SLOPE
SOG	SLAB-ON-GRADE
SPF	SIDEPLATE FRAME
STD	STANDARD
STIFF	STIFFENER
TBE	TRUSS BEARING ELEVATION
T&B	TOP & BOTTOM
T&G	TONGUE AND GROOVE
THK	THICKNESS
TOC	TOP OF CONCRETE
TOF	TOP OF FOOTING
TOM	TOP OF MASONRY
TOCP	TOP OF CONCRETE PEDESTAL
TOS	TOP OF STEEL
TS	THICKENED SLAB
TS/STR	THICKENED SLAB AT STAIR
TYP	TYPICAL
UON	UNLESS OTHERWISE NOTED
VERT	VERTICAL
W/	WITH
WP	WORKING POINT
WSP	WOOD STRUCTURAL PANEL(S)
WWR	WELDED WIRE REINFORCING

NORTH CAROLINA PROFESSIONAL SEAL 044996 ENGINEER SCOTT M. FRANCIS

07/27/2026

lynchmykins now IMEG
301 N WEST STREET, SUITE 105
RALEIGH, NC 27603
919.782.1833 www.imegcorp.com

IMEG RESERVES PROPRIETARY RIGHTS, INCLUDING COPYRIGHTS, TO THIS DRAWING AND THE DATA SHOWN THEREON. SAID DRAWING AND/OR DATA ARE THE EXCLUSIVE PROPERTY OF IMEG AND SHALL NOT BE USED OR REPRODUCED FOR ANY OTHER PROJECT WITHOUT THE EXPRESS WRITTEN APPROVAL AND PARTICIPATION OF IMEG. ©2025 IMEG CONSULTANTS CORP.

North Carolina Design Registration #F-1507

Susan Hatchell Landscape Architecture, PLLC
711 W. North Street, Raleigh, NC 27603
p: 919-838-9600 f: 919-838-9700

lynchmykins now IMEG
301 N WEST STREET, SUITE 105
RALEIGH, NC 27603
919.782.1833 www.imegcorp.com

GENERAL NOTES

LAKE MYRA COUNTY PARK
Wake County, NC

REVISIONS

Date07/27/2026

PC-S004

WALL FOOTING SCHEDULE

MARK	SIZE		REINFORCING		REMARKS
	WIDTH	DEPTH	CONTINUOUS	TRANSVERSE	
WF2	2' - 0"	1'-0"	(3) #5 BOT	#4 AT 36" OC BOT	-
WF2.5	2' - 6"	1'-0"	(3) #5 BOT	#4 AT 36" OC BOT	-
WF3	3' - 0"	1'-0"	(4) #5 BOT	#4 AT 36" OC BOT	-
WF4	4' - 0"	1'-0"	(5) #5 BOT	#4 AT 36" OC BOT	-
WF6	6' - 0"	1'-0"	(7) #5 BOT	#4 AT 24" OC BOT	-
WF7	7' - 0"	1'-6"	(8) #6 TOP & BOT	#6 AT 12" OC TOP & BOT	-

KEY NOTES

110 SEE CIVIL DRAWINGS FOR ADJACENT SITE WALL CONSTRUCTION. PROVIDE CONSTRUCTION JOINT AT INTERFACE BETWEEN SCOPES OF WORK.

111 CONCRETE STAIR-ON-GRADE. REFERENCE TYPICAL DETAILS.

FOUNDATION PLAN NOTES

A. REFERENCE ARCHITECTURAL DRAWINGS FOR DIMENSIONS TO NONBEARING WALLS, WALL CONTROL JOINTS AND OPENINGS.

B. UNLESS OTHERWISE NOTED, ALL ELEVATIONS ARE BASED ON A FINISHED FIRST FLOOR REFERENCE OF 0'-0". ACTUAL FINISHED FLOOR ELEVATION IS XX.XX'. FINISHED FLOOR ELEVATIONS AT EACH LEVEL ARE INDICATED ON SLAB PLANS. REFERENCE ARCHITECTURAL DRAWINGS FOR FINISHED FLOOR MATERIALS.

C. TOP OF ALL COLUMN AND WALL FOOTINGS MUST BE AT THE FOLLOWING ELEVATIONS UNLESS OTHERWISE NOTED ON PLAN. EXTERIOR WALL AND COLUMN FOOTINGS -1'-4". INTERIOR WALL FOOTINGS -0'-8".

D. NOT ALL UTILITY LOCATIONS ARE SHOWN ON PLAN. THE CONTRACTOR MUST COORDINATE THE LOCATIONS, SIZES, AND INVERTS OF UTILITIES. AT LOCATIONS WHERE UTILITIES PASS BELOW THE TOP OF FOOTING ELEVATION, STEP THE TOP OF FOOTING DOWN ON EACH SIDE PER THE "TYPICAL STEPPED FOOTING DETAIL" AND SLEEVE THE UTILITY THROUGH THE FOUNDATION WALL. THE CONTRACTOR MAY, AT HIS/HER OPTION, SLEEVE THE UTILITY THROUGH THE FOUNDATION PER THE "TYPICAL PIPE SLEEVE AT WALL FOOTING DETAILS."

E. UNLESS OTHERWISE INDICATED, EXTEND WALL FOOTINGS A MINIMUM OF 6 INCHES BEYOND ENDS OF WALLS.

F. NOT ALL SITE WALLS ARE SHOWN ON PLAN. CONTRACTOR MUST COORDINATE CIVIL AND LANDSCAPE DRAWINGS FOR SITE WALL INFORMATION.

G. DIMENSIONS SHOWN ON FOUNDATION PLAN ARE TO COLUMN GRIDLINES AND FACE OF FOUNDATION WALLS, UNLESS OTHERWISE NOTED.

MASONRY WALL REINFORCING SCHEDULE

MARK	WALL TYPE	REINFORCING	REMARKS
M1	8" CMU	#5 AT 32"OC	
M2	8" CMU	#5 AT 24"OC	
M3	8" CMU	#5 AT 16"OC	

CONCRETE WALL REINFORCING SCHEDULE

MARK	WALL THICKNESS	VERTICAL REINFORCING	REMARKS
CW1	16"	#6 @ 15" OC EF	#6 @ 12" OC EF
CW2	12"	#6 @ 15" OC EF	#6 @ 12" OC EF

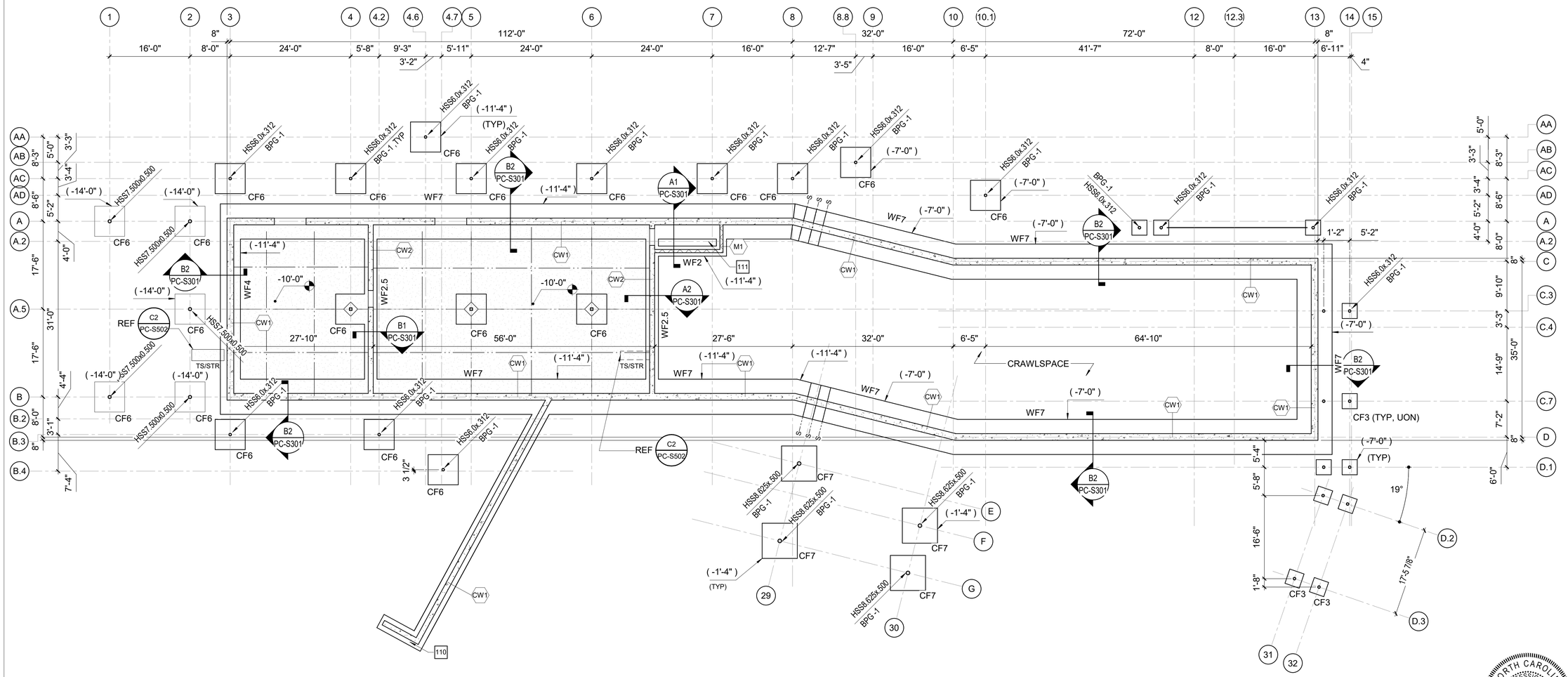

A1 PARK CENTER - BASEMENT / CRAWL SPACE FOUNDATION PLAN

1" = 10'-0"

Susan Hatchell
Landscape Architecture, PLLC
711 W. North Street, Raleigh, NC 27603
p: 919-838-9600 f: 919-838-9700

lynchmykins now IMEG
301 N WEST STREET, SUITE 105
RALEIGH, NC 27603
919.782.1833 www.imegcorp.com

PARK CENTER BASEMENT FOUNDATION AND SLAB PLAN

LAKE MYRA COUNTY PARK

Wake County, NC

NORTH CAROLINA PROFESSIONAL ENGINEER SEAL 044996 SCOTT M. FRANCIS

07/27/2026

REVISIONS

lynchmykins now IMEG
301 N WEST STREET, SUITE 105
RALEIGH, NC 27603
919.782.1833 www.imegcorp.com

IMEG RESERVES PROPRIETARY RIGHTS, INCLUDING COPYRIGHTS, TO THIS DRAWING AND THE DATA SHOWN THEREON. SAID DRAWING AND/OR DATA ARE THE EXCLUSIVE PROPERTY OF IMEG AND SHALL NOT BE USED OR REPRODUCED FOR ANY OTHER PROJECT WITHOUT THE EXPRESS WRITTEN APPROVAL AND PARTICIPATION OF IMEG. ©2025 IMEG CONSULTANTS CORP.

North Carolina Design Registration #F-1507

Date07/27/2026

PC-S101

KEY NOTES

201 5/4" WOOD-PLASTIC COMPOSITE DECKING BOARDS ON 2x10 PRESSURE TREATED JOISTS AT 16" ON CENTER - TYPICAL AT EXTERIOR DECK.

205 WOOD 2x10 JOISTS AT 16" OC, TYP AT EXTERIOR DECK

FRAMING PLAN NOTES

A. REFERENCE FOUNDATION PLAN AND ARCHITECTURAL DRAWINGS FOR DIMENSIONS NOT SHOWN.

B. TOP OF FINISHED FLOOR ELEVATION MUST BE AS NOTED ON SLAB PLANS.

C. COMPOSITE STEEL BEAM FRAMING MUST BE EQUALLY SPACED BETWEEN POINTS OF KNOWN DIMENSIONS (NOT TO EXCEED 8'-0" ON-CENTER).

D. CONCRETE ON ELEVATED METAL DECKS MUST BE POURED TO THE THICKNESS INDICATED.

E. AT STEEL ROOF FRAMING, BOTTOM OF DECK ELEVATIONS ARE SHOWN ON PLAN. INTERMEDIATE ELEVATIONS MUST BE STRAIGHT LINES BETWEEN GIVEN ELEVATIONS. INTERPOLATE AS REQUIRED FOR INTERMEDIATE BEARING ELEVATIONS, UNLESS OTHERWISE NOTED.

F. COORDINATE AND VERIFY ALL MEMBER LOCATIONS, DIMENSIONS, WEIGHTS, OPENING SIZES, AND CURB DIMENSIONS FOR ALL MECHANICAL EQUIPMENT WITH THE ACTUAL EQUIPMENT FURNISHED. INCLUDE THIS INFORMATION ON THE JOIST AND STRUCTURAL STEEL SHOP DRAWINGS.

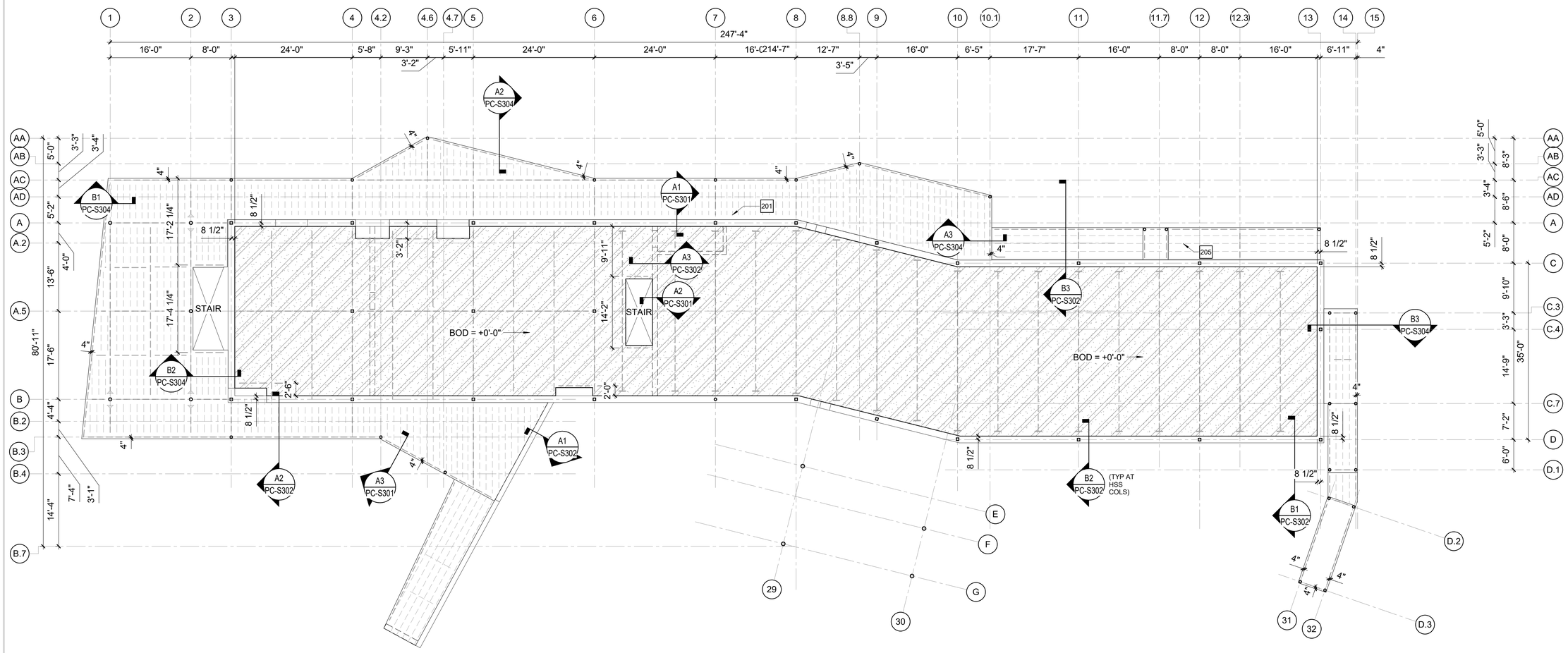

A1 PARK CENTER - FIRST FLOOR SLAB PLAN
1" = 10'-0"

Susan Hatchell
Landscape Architecture, PLLC
711 W. North Street, Raleigh, NC 27603
p: 919-838-9600 f: 919-838-9700

lynchmykins now IMEG
301 N WEST STREET, SUITE 105
RALEIGH, NC 27603
919.782.1833 www.imegcorp.com

PARK CENTER FIRST FLOOR SLAB PLAN

LAKE MYRA COUNTY PARK
Wake County, NC

NORTH CAROLINA PROFESSIONAL SEAL 044996 ENGINEER SCOTT M. FRANCIS
07/27/2026

REVISIONS

lynchmykins now IMEG
301 N WEST STREET, SUITE 105
RALEIGH, NC 27603
919.782.1833 www.imegcorp.com

IMEG RESERVES PROPRIETARY RIGHTS, INCLUDING COPYRIGHTS, TO THIS DRAWING AND THE DATA SHOWN THEREON. SAID DRAWING AND/OR DATA ARE THE EXCLUSIVE PROPERTY OF IMEG AND SHALL NOT BE USED OR REPRODUCED FOR ANY OTHER PROJECT WITHOUT THE EXPRESS WRITTEN APPROVAL AND PARTICIPATION OF IMEG. ©2025 IMEG CONSULTANTS CORP.

North Carolina Design Registration #F-1507

Date07/27/2026

PC-S102

KEY NOTES

205 WOOD 2x10 JOISTS AT 16" OC, TYP AT EXTERIOR DECK

FRAMING PLAN NOTES

A. REFERENCE FOUNDATION PLAN AND ARCHITECTURAL DRAWINGS FOR DIMENSIONS NOT SHOWN.

B. TOP OF FINISHED FLOOR ELEVATION MUST BE AS NOTED ON SLAB PLANS.

C. COMPOSITE STEEL BEAM FRAMING MUST BE EQUALLY SPACED BETWEEN POINTS OF KNOWN DIMENSIONS (NOT TO EXCEED 8'-0" ON-CENTER).

D. CONCRETE ON ELEVATED METAL DECKS MUST BE POURED TO THE THICKNESS INDICATED.

E. AT STEEL ROOF FRAMING, BOTTOM OF DECK ELEVATIONS ARE SHOWN ON PLAN. INTERMEDIATE ELEVATIONS MUST BE STRAIGHT LINES BETWEEN GIVEN ELEVATIONS. INTERPOLATE AS REQUIRED FOR INTERMEDIATE BEARING ELEVATIONS, UNLESS OTHERWISE NOTED.

F. COORDINATE AND VERIFY ALL MEMBER LOCATIONS, DIMENSIONS, WEIGHTS, OPENING SIZES, AND CURB DIMENSIONS FOR ALL MECHANICAL EQUIPMENT WITH THE ACTUAL EQUIPMENT FURNISHED. INCLUDE THIS INFORMATION ON THE JOIST AND STRUCTURAL STEEL SHOP DRAWINGS.

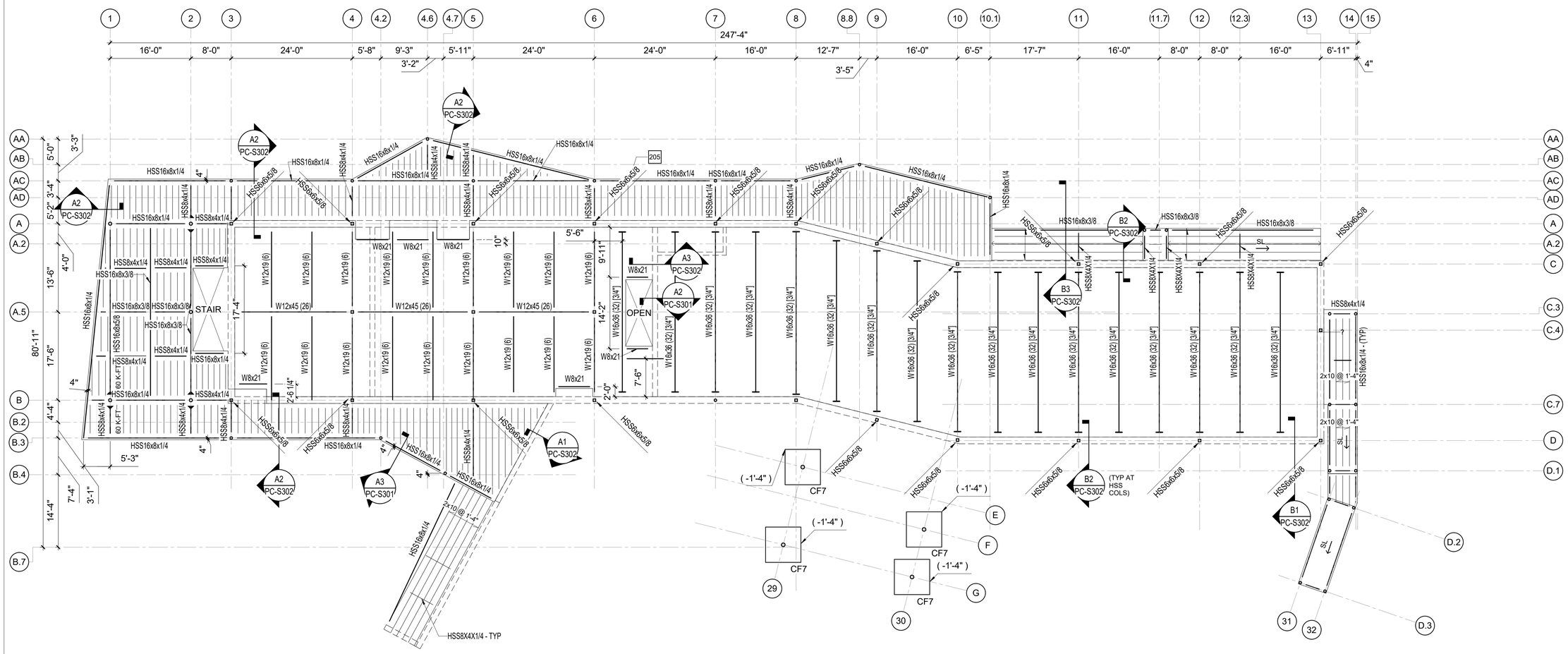

A1 PARK CENTER - FIRST FLOOR FRAMING PLAN
1" = 10'-0"

Susan Hatchell
Landscape Architecture, PLLC
711 W. North Street, Raleigh, NC 27603
p: 919-838-9600 f: 919-838-9700

lynchmykins now IMEG
301 N WEST STREET, SUITE 105
RALEIGH, NC 27603
919.782.1833 www.imegcorp.com

PARK CENTER FIRST FLOOR FRAMING PLAN

LAKE MYRA COUNTY PARK
Wake County, NC

NORTH CAROLINA PROFESSIONAL SEAL 044996 ENGINEER SCOTT M. FRANCIS
07/27/2026

REVISIONS

lynchmykins now IMEG
301 N WEST STREET, SUITE 105
RALEIGH, NC 27603
919.782.1833 www.imegcorp.com

IMEG RESERVES PROPRIETARY RIGHTS, INCLUDING COPYRIGHTS, TO THIS DRAWING AND THE DATA SHOWN THEREON. SAID DRAWING AND/OR DATA ARE THE EXCLUSIVE PROPERTY OF IMEG AND SHALL NOT BE USED OR REPRODUCED FOR ANY OTHER PROJECT WITHOUT THE EXPRESS WRITTEN APPROVAL AND PARTICIPATION OF IMEG. ©2025 IMEG CONSULTANTS CORP.

North Carolina Design Registration #F-1507

Date07/27/2026

PC-S103

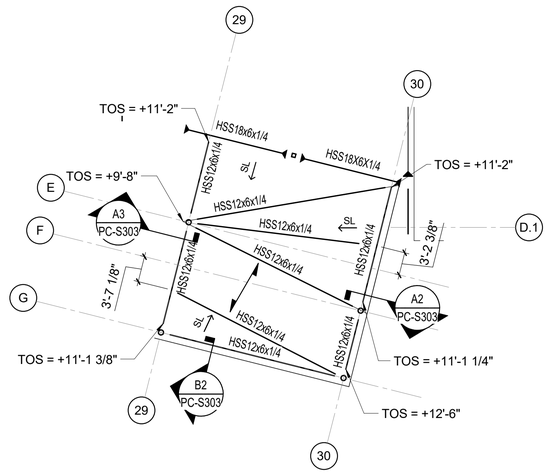

A2 CANOPY FRAMING PLAN
1" = 10'-0"

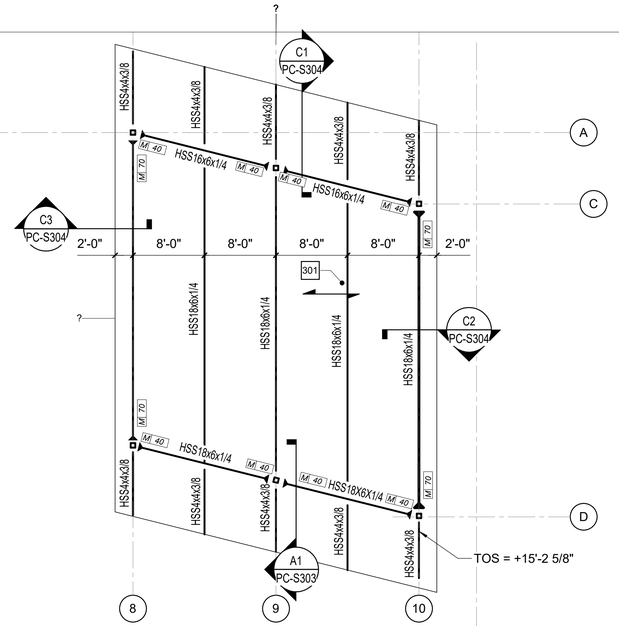

A3 PARK CENTER UPPER ROOF FRAMING PLAN
1/8" = 1'-0"

KEY NOTES

204 SELF-SUPPORTING OPERABLE PARTITIONS - REFER TO ARCHITECTURAL DRAWINGS.

301 2x6 TONGUE AND GROOVE WOOD DECKING WITH 9/16" PLYWOOD.

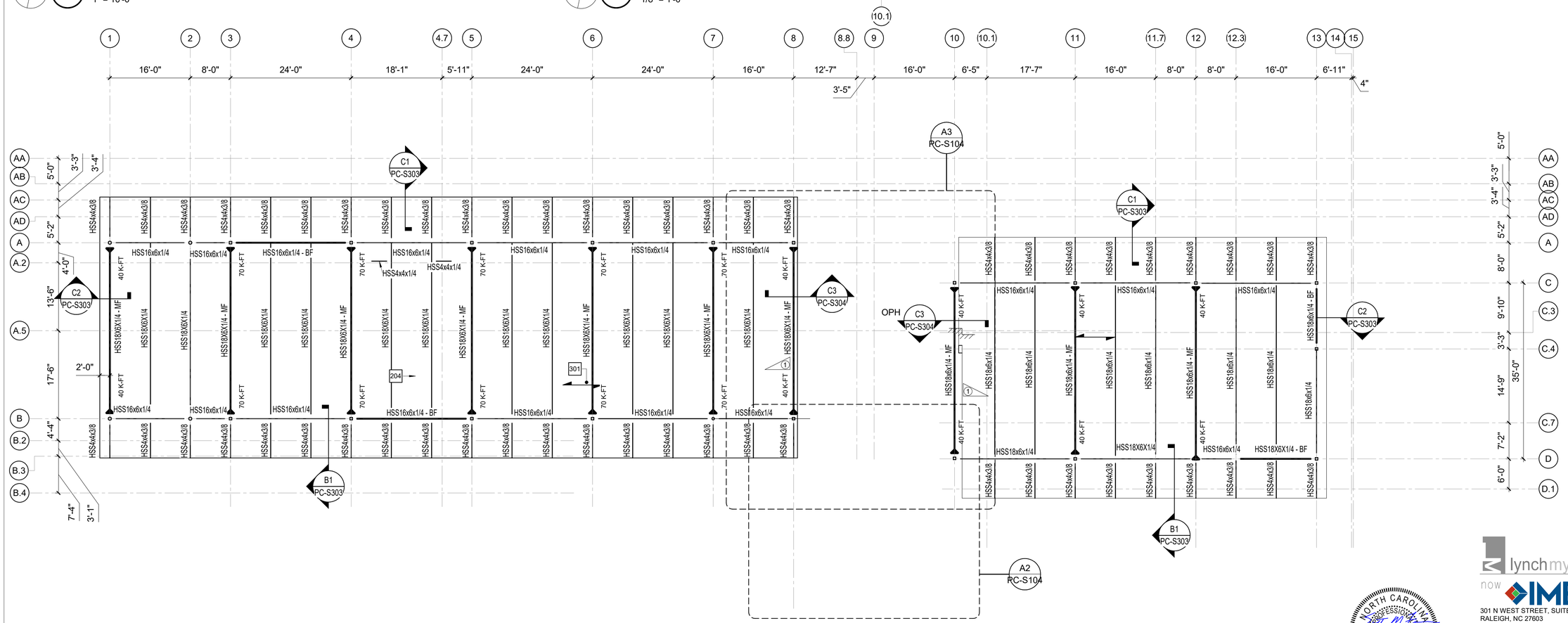

A1 PARK CENTER - ROOF FRAMING PLAN
1" = 10'-0"

Susan Hatchell
Landscape Architecture, PLLC
711 W. North Street, Raleigh, NC 27603
p: 919-838-9600 f: 919-838-9700

lynchmykins now IMEG
301 N WEST STREET, SUITE 105
RALEIGH, NC 27603
919.782.1833 www.imegcorp.com

PARK CENTER ROOF FRAMING PLAN

LAKE MYRA COUNTY PARK
Wake County, NC

REVISIONS

Date07/27/2026

PC-S104

NORTH CAROLINA PROFESSIONAL SEAL 044996 ENGINEER SCOTT M. FRANCIS
07/27/2026

lynchmykins now IMEG
301 N WEST STREET, SUITE 105
RALEIGH, NC 27603
919.782.1833 www.imegcorp.com

IMEG RESERVES PROPRIETARY RIGHTS, INCLUDING COPYRIGHTS, TO THIS DRAWING AND THE DATA SHOWN THEREON. SAID DRAWING AND/OR DATA ARE THE EXCLUSIVE PROPERTY OF IMEG AND SHALL NOT BE USED OR REPRODUCED FOR ANY OTHER PROJECT WITHOUT THE EXPRESS WRITTEN APPROVAL AND PARTICIPATION OF IMEG.
©2025 IMEG CONSULTANTS CORP.

North Carolina Design Registration #F-1507

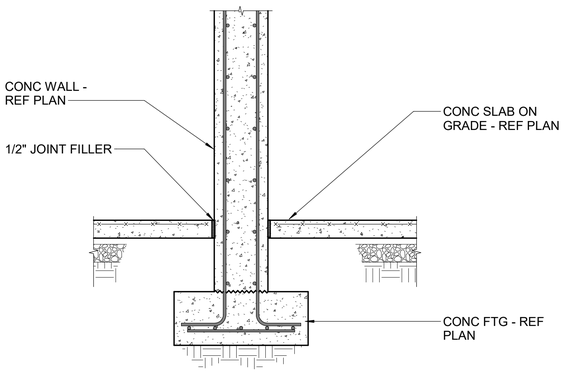

B1 SECTION
3/4" = 1'-0"

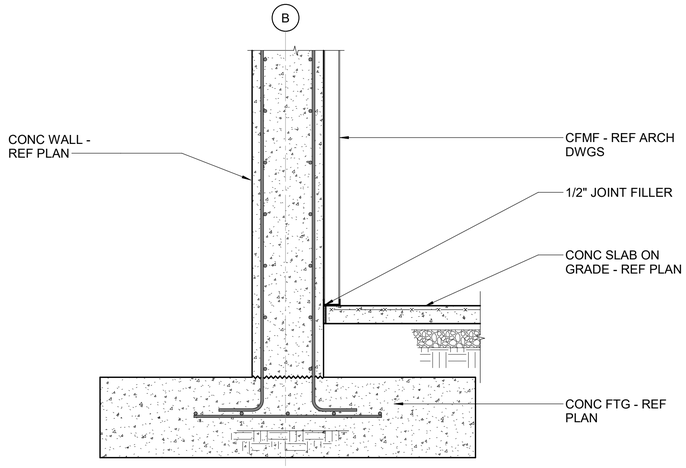

B2 SECTION
3/4" = 1'-0"

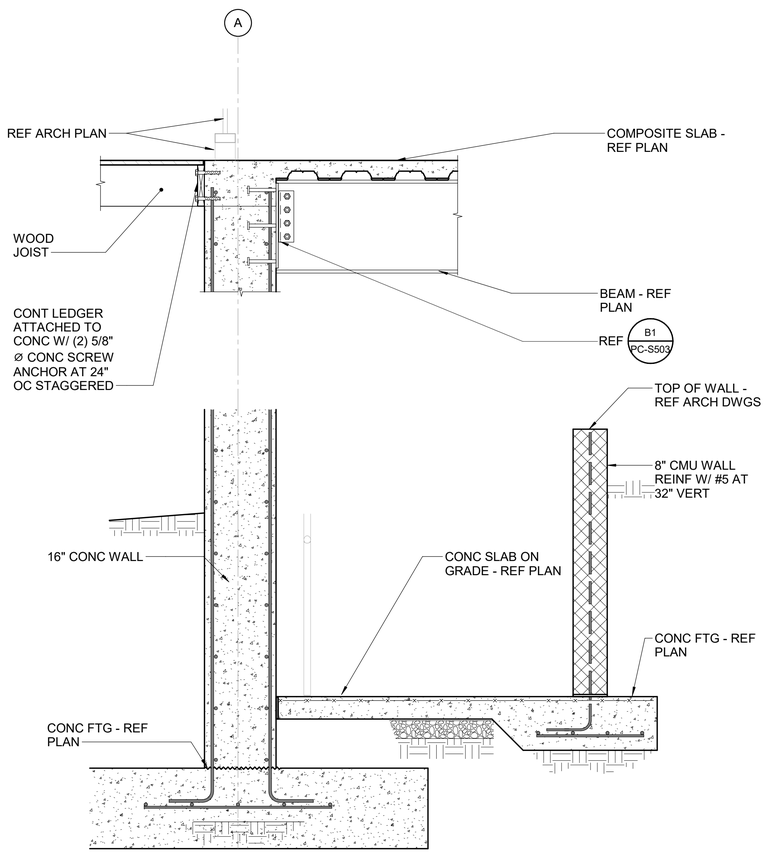

A1 SECTION
3/4" = 1'-0"

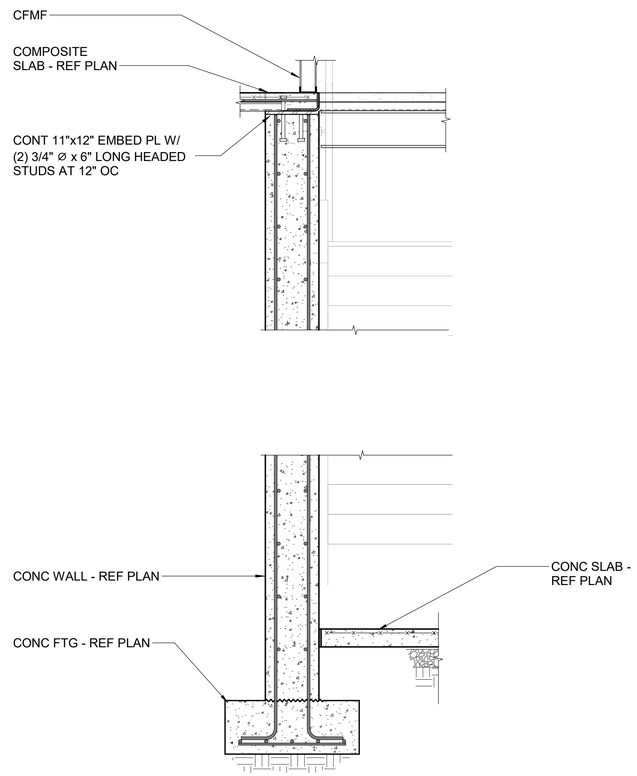

A2 SECTION
3/4" = 1'-0"

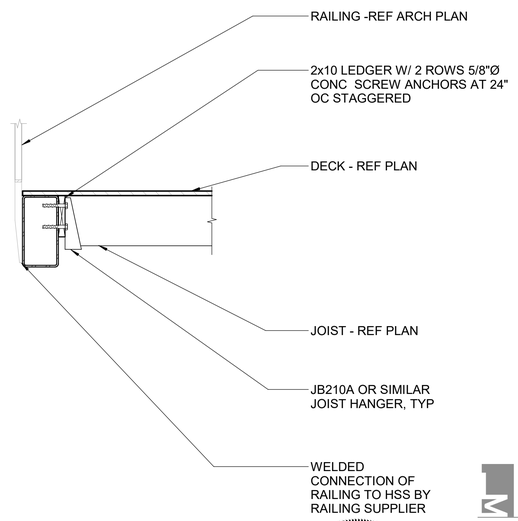

A3 SECTION
3/4" = 1'-0"

NORTH CAROLINA PROFESSIONAL SEAL 044996 ENGINEER SCOTT M. FRANCIS
07/27/2026

lynchmykins now IMEG
301 N WEST STREET, SUITE 105
RALEIGH, NC 27603
919.782.1833 www.imegcorp.com

IMEG RESERVES PROPRIETARY RIGHTS, INCLUDING COPYRIGHTS, TO THIS DRAWING AND THE DATA SHOWN THEREON. SAID DRAWING AND/OR DATA ARE THE EXCLUSIVE PROPERTY OF IMEG AND SHALL NOT BE USED OR REPRODUCED FOR ANY OTHER PROJECT WITHOUT THE EXPRESS WRITTEN APPROVAL AND PARTICIPATION OF IMEG. ©2025 IMEG CONSULTANTS CORP.
North Carolina Design Registration #F-1507

Susan Hatchell
Landscape Architecture, PLLC
711 W. North Street, Raleigh, NC 27603
p: 919-838-9600 f: 919-838-9700

lynchmykins now IMEG
301 N WEST STREET, SUITE 105
RALEIGH, NC 27603
919.782.1833 www.imegcorp.com

SECTIONS

LAKE MYRA COUNTY PARK
Wake County, NC

REVISIONS

Date: 7/27/26

PC-S301

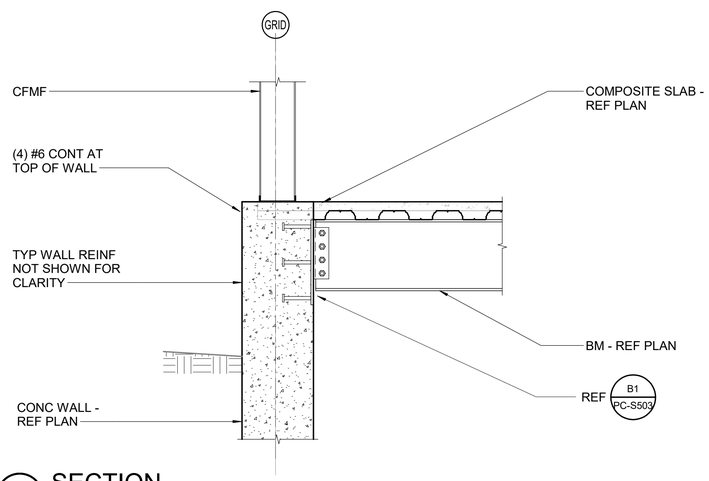

B1 SECTION
3/4" = 1'-0"

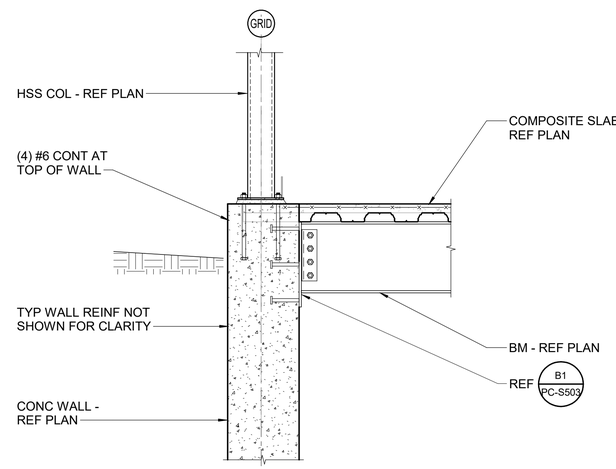

B2 SECTION
3/4" = 1'-0"

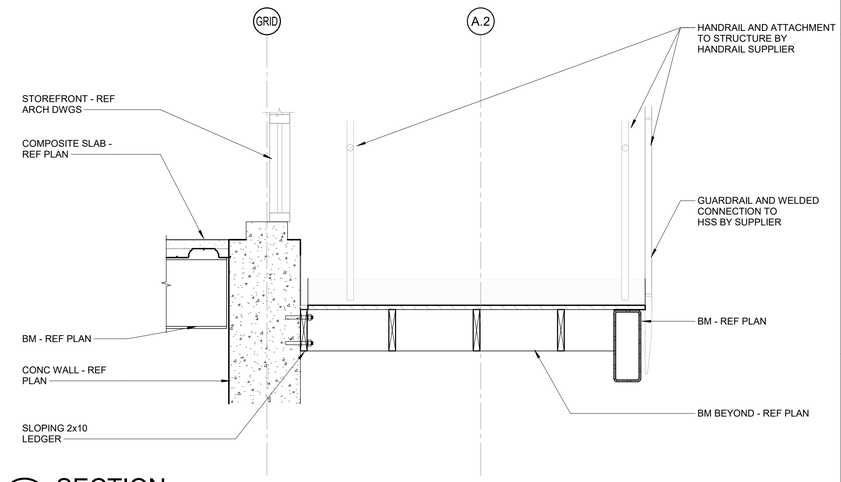

B3 SECTION
3/4" = 1'-0"

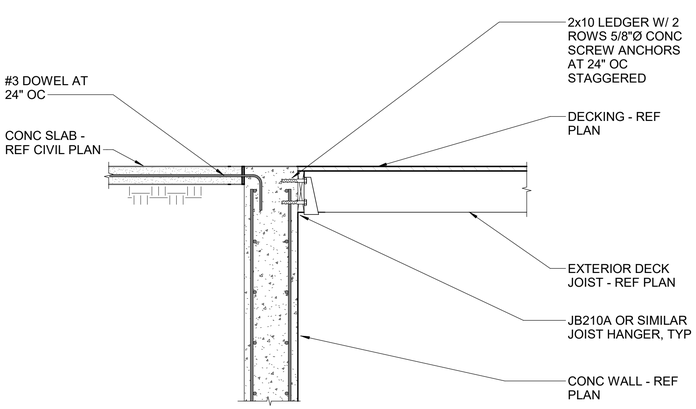

A1 SECTION
3/4" = 1'-0"

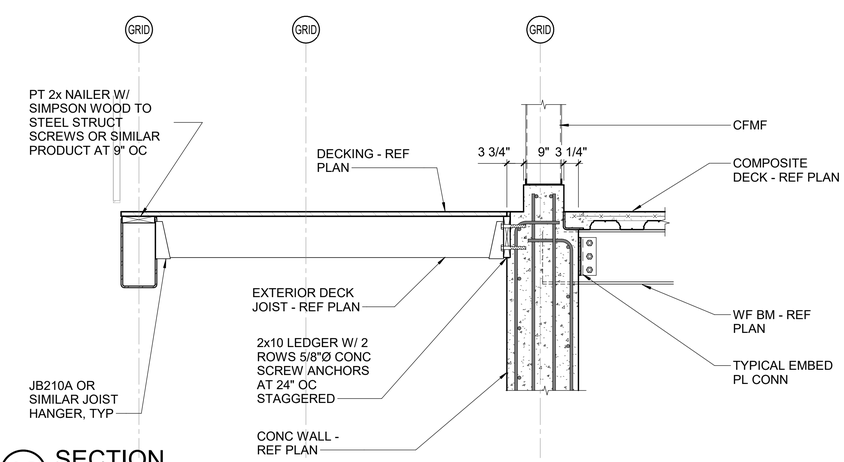

A2 SECTION
3/4" = 1'-0"

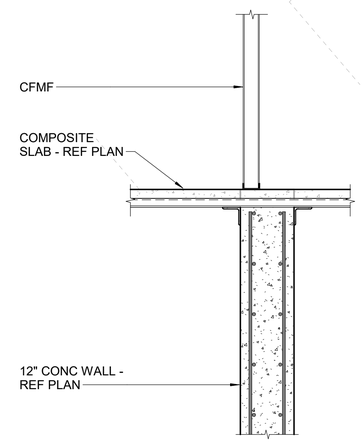

A3 SECTION
3/4" = 1'-0"

Susan Hatchell
Landscape Architecture, PLLC
711 W. North Street, Raleigh, NC 27603
p: 919-838-9600 f: 919-838-9700

lynchmykins now IMEG
301 N WEST STREET, SUITE 105
RALEIGH, NC 27603
919.782.1833 www.imegcorp.com

SECTIONS

LAKE MYRA COUNTY PARK
Wake County, NC

NORTH CAROLINA PROFESSIONAL SEAL 044996 ENGINEER SCOTT M. FRANCIS
07/27/2026

REVISIONS

lynchmykins now IMEG
301 N WEST STREET, SUITE 105
RALEIGH, NC 27603
919.782.1833 www.imegcorp.com

IMEG RESERVES PROPRIETARY RIGHTS, INCLUDING COPYRIGHTS, TO THIS DRAWING AND THE DATA SHOWN THEREON. SAID DRAWING AND/OR DATA ARE THE EXCLUSIVE PROPERTY OF IMEG AND SHALL NOT BE USED OR REPRODUCED FOR ANY OTHER PROJECT WITHOUT THE EXPRESS WRITTEN APPROVAL AND PARTICIPATION OF IMEG. ©2025 IMEG CONSULTANTS CORP.
North Carolina Design Registration #F-1507

Date07/27/2026

PC-S302

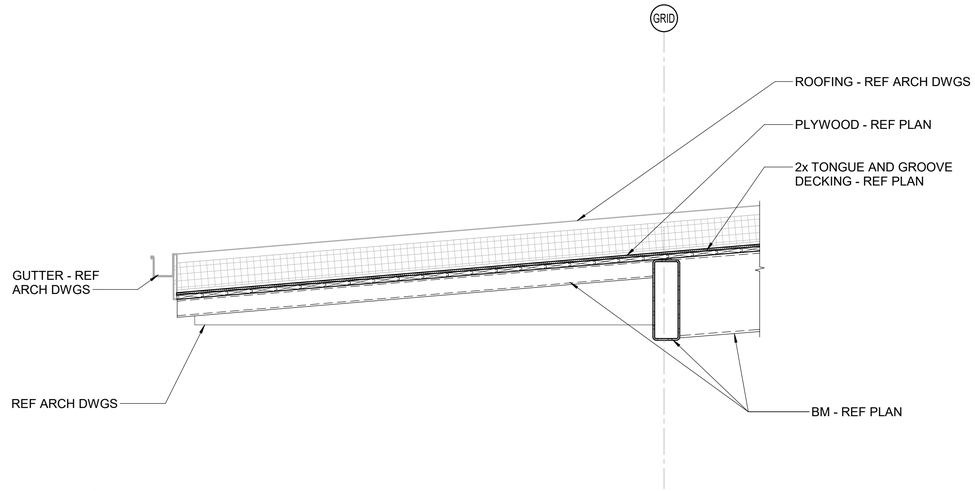

C1 SECTION
3/4" = 1'-0"

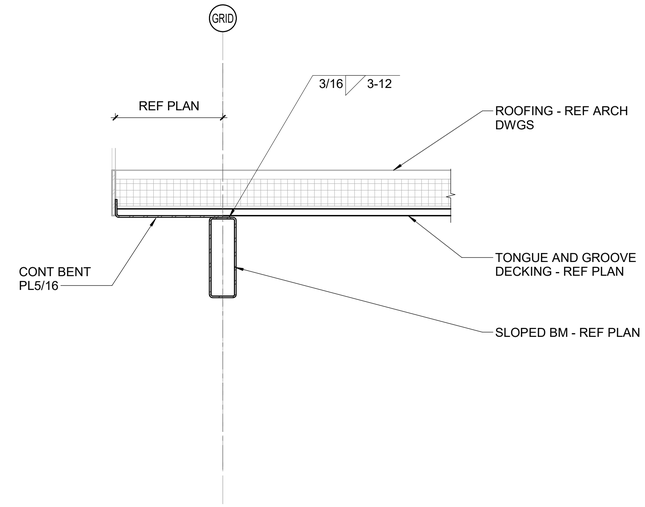

C2 SECTION
3/4" = 1'-0"

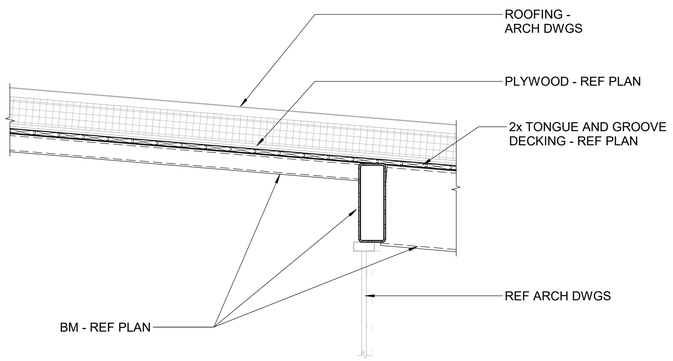

A1 SECTION
3/4" = 1'-0"

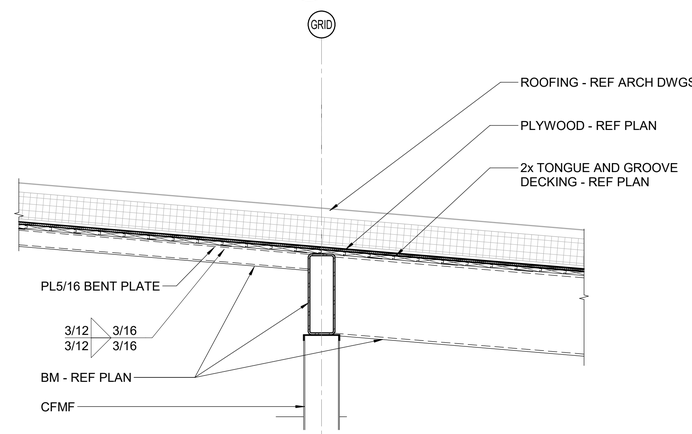

B1 SECTION
3/4" = 1'-0"

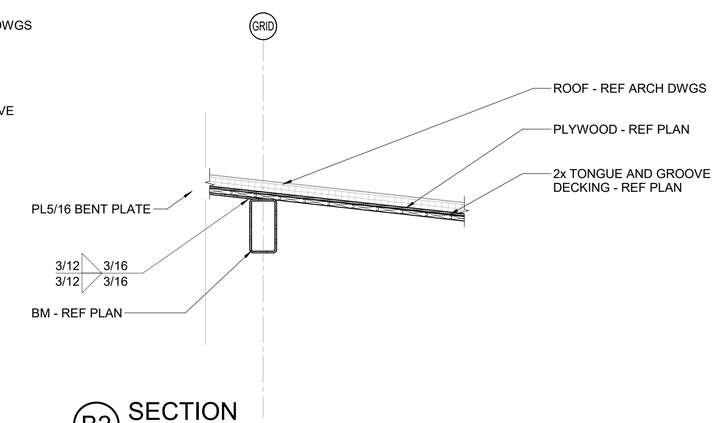

B2 SECTION
3/4" = 1'-0"

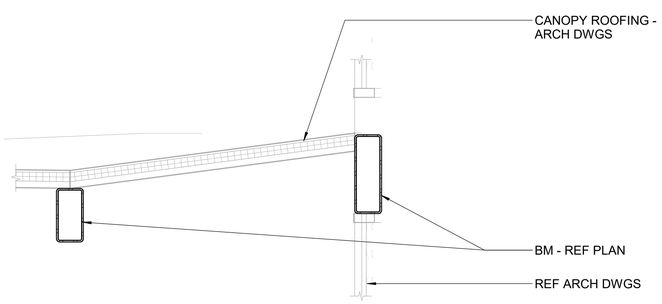

A2 SECTION
3/4" = 1'-0"

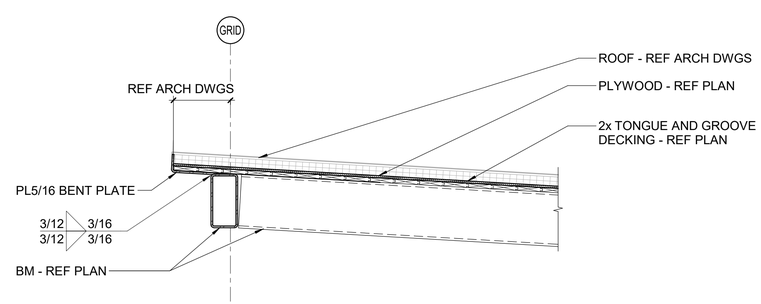

A3 SECTION
3/4" = 1'-0"

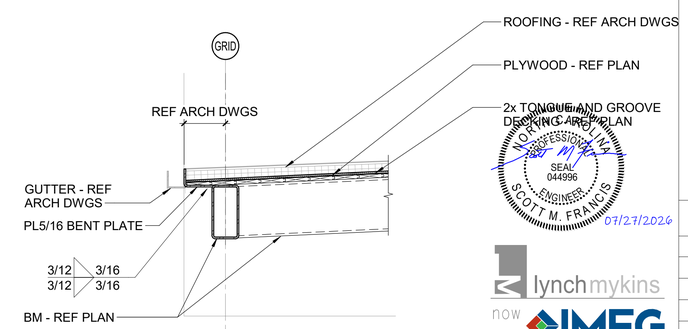

Susan Hatchell
Landscape Architecture, PLLC
711 W. North Street, Raleigh, NC 27603
p: 919-838-9600 f: 919-838-9700

lynchmykins now IMEG
301 N WEST STREET, SUITE 105
RALEIGH, NC 27603
919.782.1833 www.imegcorp.com

SECTIONS

LAKE MYRA COUNTY PARK
Wake County, NC

REVISIONS

NORTH CAROLINA PROFESSIONAL SEAL 044996 ENGINEER SCOTT M. FRANCIS
07/27/2026

lynchmykins now IMEG
301 N WEST STREET, SUITE 105
RALEIGH, NC 27603
919.782.1833 www.imegcorp.com

IMEG RESERVES PROPRIETARY RIGHTS, INCLUDING COPYRIGHTS, TO THIS DRAWING AND THE DATA SHOWN THEREON. SAID DRAWING AND/OR DATA ARE THE EXCLUSIVE PROPERTY OF IMEG AND SHALL NOT BE USED OR REPRODUCED FOR ANY OTHER PROJECT WITHOUT THE EXPRESS WRITTEN APPROVAL AND PARTICIPATION OF IMEG. ©2025 IMEG CONSULTANTS CORP.
North Carolina Design Registration #F-1507

Date07/27/2026

PC-S303

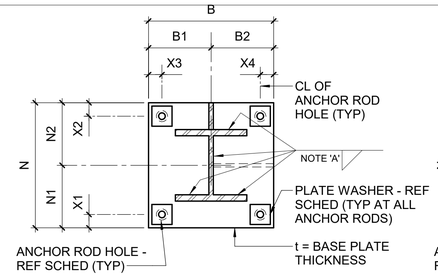

WF

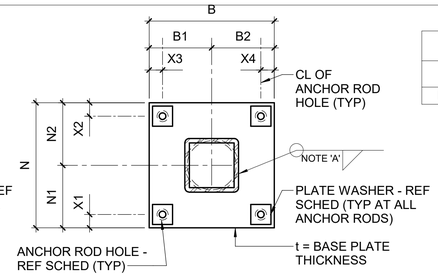

HSS

COLUMN BASE PLATE SCHEDULE - GRAVITY COLUMNS

MARK	BASE PLATE DIMENSIONS											ANCHOR RODS			REMARKS
	B	N	t	B1	B2	N1	N2	X1	X2	X3	X4	DIAMETER	QUANTITY	EMBED	
BPG-1	16"	16"	3/4"	8"	8"	8"	8"	1 1/2"	1 1/2"	1 1/2"	1 1/2"	3/4"	4	9"	

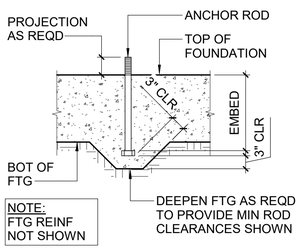

ANCHOR ROD
SHALLOW FOUNDATIONS

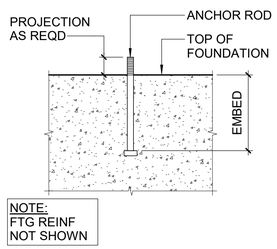

ANCHOR ROD
DEEP FOUNDATIONS

ANCHOR ROD HOLES AND WASHER SCHEDULE

ANCHOR ROD	OVERSIZED HOLE WITH PLATE WASHER				STANDARD HOLE	
	BASE PLATE HOLE	WASHER SIZE	WASHER HOLE	WASHER THICKNESS	BASE PLATE HOLE	WASHER
3/4"Ø	1 5/16"Ø	2" SQ	13/16"Ø	1/4"	1 1/16"Ø	ASTM F844
7/8"Ø	1 9/16"Ø	2 1/2" SQ	15/16"Ø	5/16"	1 3/16"Ø	ASTM F844
1"Ø	1 13/16"Ø	3" SQ	1 1/16"Ø	3/8"	1 1/2"Ø	ASTM F844

NOTE:
A. PROVIDE MINIMUM SIZE WELD PER AISC TABLE J2.4.

B. GENERAL CONTRACTOR'S OPTION TO USE STANDARD OR OVERSIZED HOLES IN GRAVITY COLUMN BASE PLATES. NO WELDING REQUIRED AT PLATE WASHERS USED WITH OVERSIZED HOLES.

C1 GRAVITY COLUMN BASE PLATE AND ANCHOR ROD DETAILS
NTS

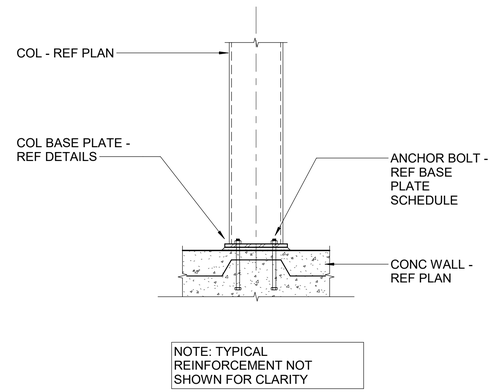

C2 TYPICAL COLUMN AT CONC WALL
NTS

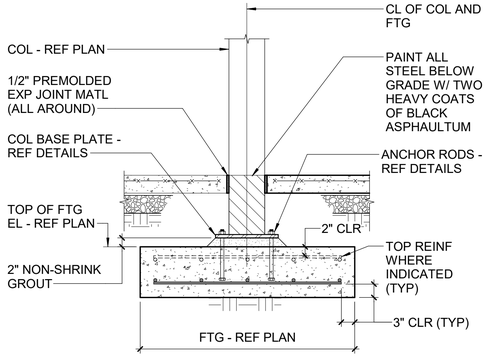

B1 TYPICAL COLUMN & FOOTING DETAIL
NTS

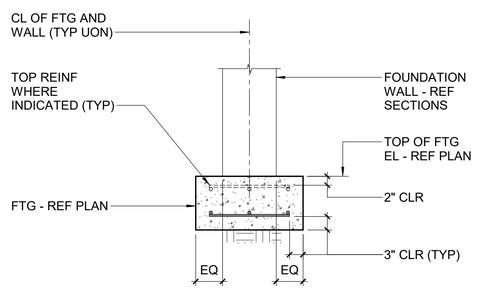

B2 TYPICAL WALL FOOTING DETAIL
NTS

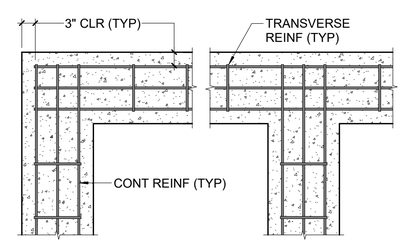

B3 TYPICAL WALL FOOTING CORNER & INTERSECTION DETAILS
NTS

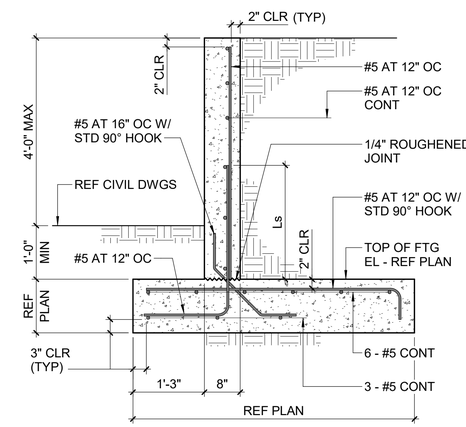

B4 TYPICAL RETAINING WALL FOOTING DETAIL
NTS

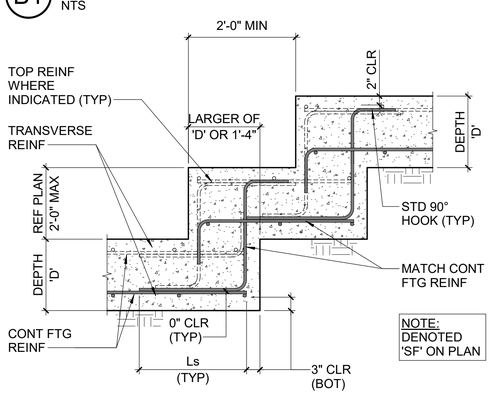

A1 TYPICAL STEPPED WALL FOOTING DETAIL
NTS

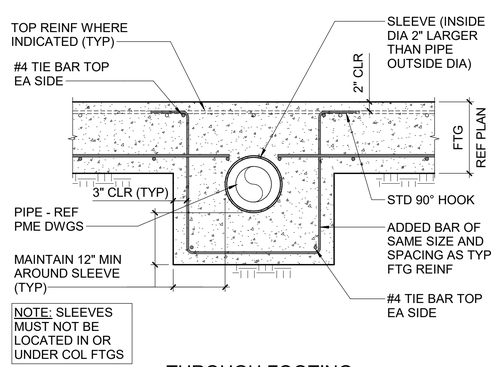

THROUGH FOOTING

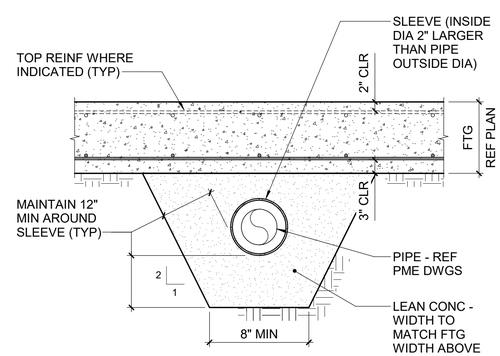

BELOW FOOTING

A2 TYPICAL PIPE SLEEVE AT WALL FOOTING DETAILS
NTS

Susan Hatchell
Landscape Architecture, PLLC
711 W. North Street, Raleigh, NC 27603
p: 919-838-9600 f: 919-838-9700

lynchmykins now IMEG
301 N WEST STREET, SUITE 105
RALEIGH, NC 27603
919.782.1833 www.imegcorp.com

TYPICAL DETAILS

LAKE MYRA COUNTY PARK
Wake County, NC

NORTH CAROLINA PROFESSIONAL SEAL 044996 ENGINEER SCOTT M. FRANCIS
07/27/2026

lynchmykins now IMEG
301 N WEST STREET, SUITE 105
RALEIGH, NC 27603
919.782.1833 www.imegcorp.com

IMEG RESERVES PROPRIETARY RIGHTS, INCLUDING COPYRIGHTS, TO THIS DRAWING AND THE DATA SHOWN THEREON. SAID DRAWING AND/OR DATA ARE THE EXCLUSIVE PROPERTY OF IMEG AND SHALL NOT BE USED OR REPRODUCED FOR ANY OTHER PROJECT WITHOUT THE EXPRESS WRITTEN APPROVAL AND PARTICIPATION OF IMEG. ©2025 IMEG CONSULTANTS CORP.

North Carolina Design Registration #F-1507

REVISIONS

Date07/27/2026

PC-S501

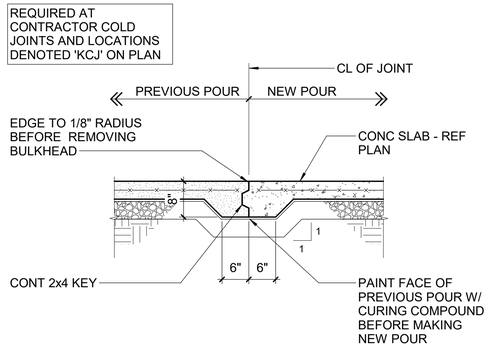

D1 TYPICAL KEYED CONSTRUCTION JOINT DETAIL
NTS

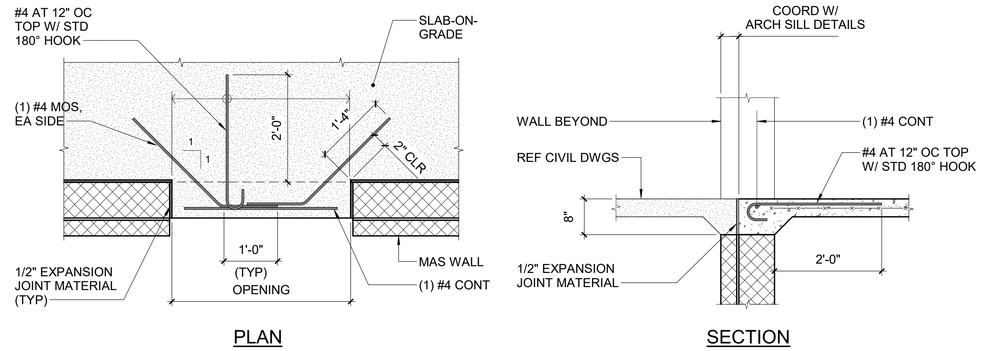

D2 TYPICAL EXTERIOR DOORS / OPENINGS DETAIL
NTS

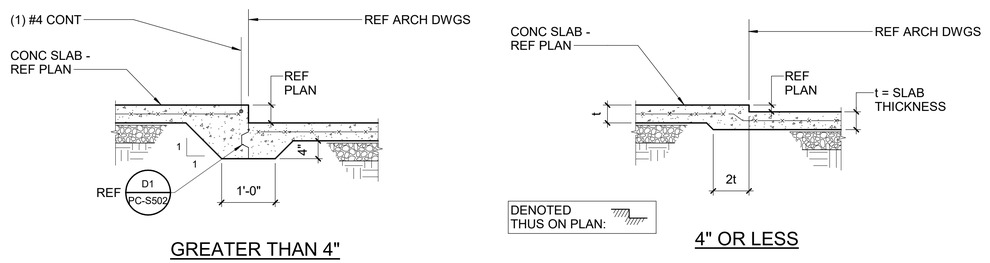

C1 TYPICAL DEPRESSED SLAB DETAILS
NTS

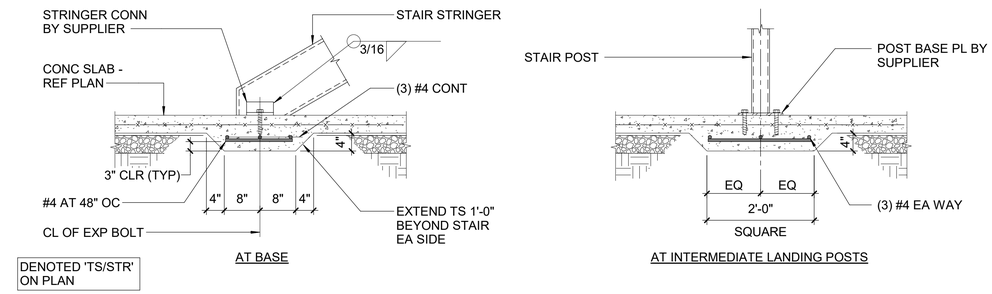

C2 TYPICAL THICKENED SLAB AT STAIR LANDING DETAIL
NTS

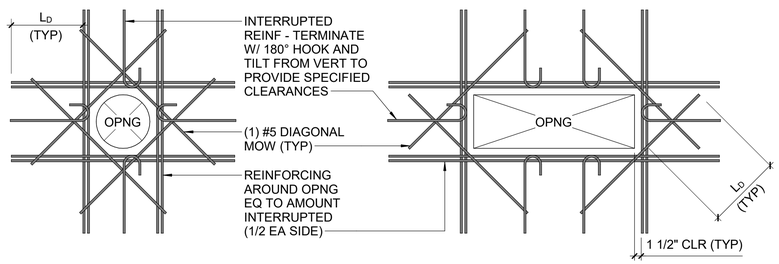

NOTES:

1. ALL OPENINGS IN CONCRETE WALLS REQUIRE ADDITIONAL REINFORCING AS INDICATED EXCEPT WHERE OPENING SIZE OR LOCATION IS SUCH THAT REINFORCING STEEL IS NOT INTERRUPTED.
2. CONDUITS, SMALL PIPES AND OTHER SMALL SLEEVES THAT DO NOT REQUIRE PRECISE LOCATIONS MUST BE SHIFTED SLIGHTLY TO CLEAR REINFORCING.

B1 TYPICAL CONCRETE WALL OPENING DETAILS
NTS

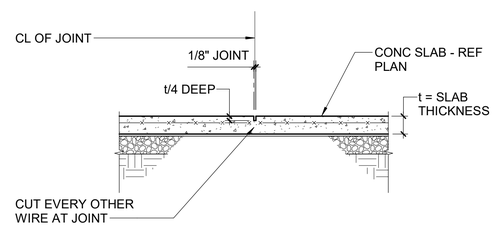

B2 TYPICAL SAWED JOINT DETAIL
NTS

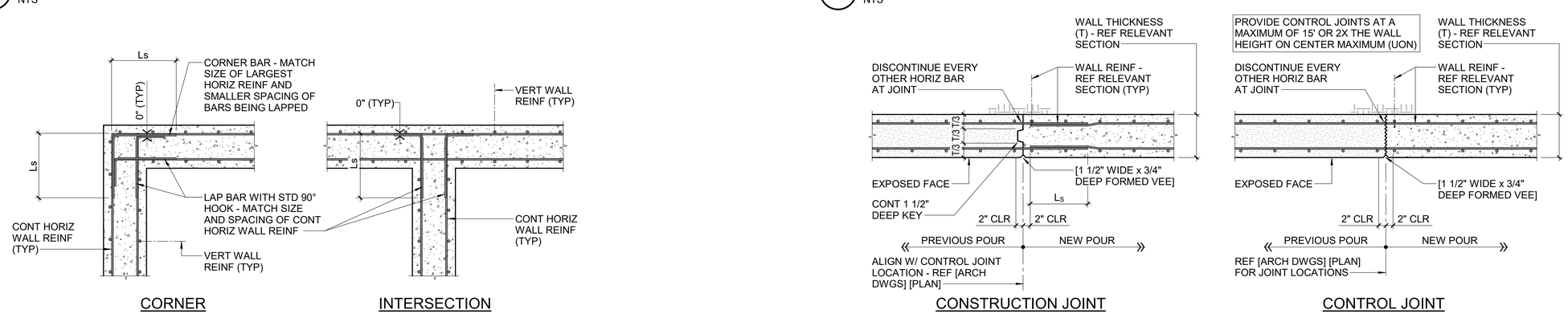

A1 TYPICAL DETAIL AT CORNERS AND INTERSECTIONS OF CONCRETE WALLS
NTS

A2 TYPICAL CONCRETE WALL VERTICAL JOINT DETAILS
NTS

Susan Hatchell
Landscape Architecture, PLLC
711 W. North Street, Raleigh, NC 27603
p: 919-838-9600 f: 919-838-9700

lynchmykins now IMEG
301 N WEST STREET, SUITE 105
RALEIGH, NC 27603
919.782.1833 www.imegcorp.com

NORTH CAROLINA PROFESSIONAL SEAL 044996 ENGINEER SCOTT M. FRANCIS
07/27/2026

lynchmykins now IMEG
301 N WEST STREET, SUITE 105
RALEIGH, NC 27603
919.782.1833 www.imegcorp.com

IMEG RESERVES PROPRIETARY RIGHTS, INCLUDING COPYRIGHTS. TO THIS DRAWING AND THE DATA SHOWN THEREON. SAID DRAWING AND/OR DATA ARE THE EXCLUSIVE PROPERTY OF IMEG AND SHALL NOT BE USED OR REPRODUCED FOR ANY OTHER PROJECT WITHOUT THE EXPRESS WRITTEN APPROVAL AND PARTICIPATION OF IMEG. ©2025 IMEG CONSULTANTS CORP.

North Carolina Design Registration #F-1507

TYPICAL DETAILS

LAKE MYRA COUNTY PARK
Wake County, NC

REVISIONS

Date07/27/2026

PC-S502

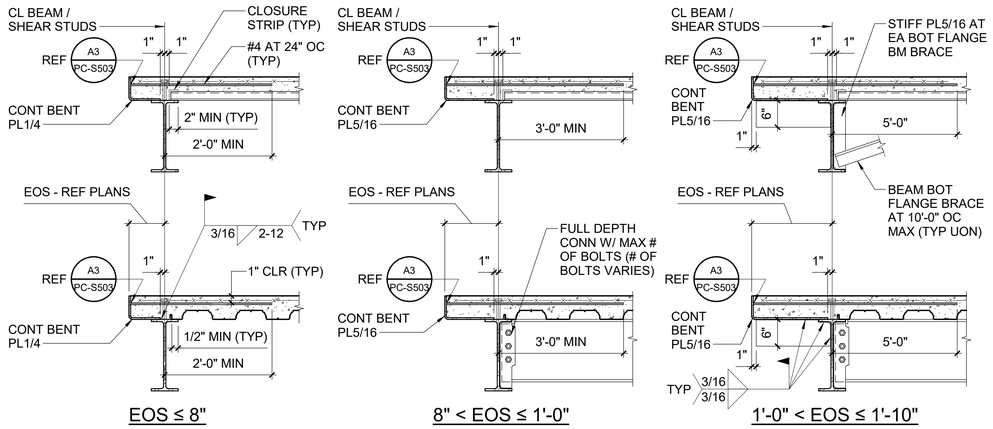

EOS ≤ 8" | 8" < EOS ≤ 1'-0" | 1'-0" < EOS ≤ 1'-10"

C1 TYPICAL EDGE OF COMPOSITE SLAB DETAILS
NTS

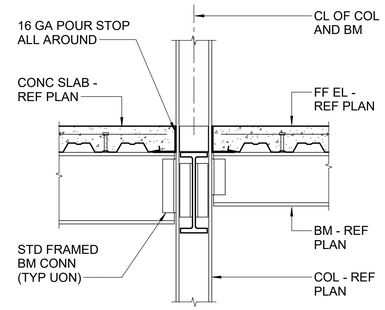

C2 TYPICAL COLUMN / BEAM CONNECTION DETAIL
NTS

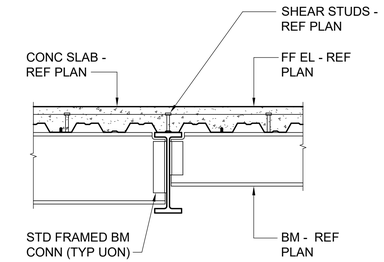

C3 TYPICAL BEAM / BEAM CONNECTION DETAIL
NTS

NOTES:

1. SEE MECHANICAL, ELECTRICAL, PLUMBING, AND FIRE PROTECTION DRAWINGS FOR LOCATIONS AND SIZE OF FLOOR PENETRATIONS NOT SPECIFICALLY DETAILED ON THE STRUCTURAL FRAMING PLANS.
2. PENETRATIONS, LESS THAN OR EQUAL TO 6" IN ANY DIMENSION MUST BE PERMITTED IN THE ELEVATED SLAB ON METAL DECK WITHOUT REINFORCING, PROVIDED THE SPACING BETWEEN PENETRATIONS DOES NOT EXCEED THE FOLLOWING, AS DEPICTED BELOW:
   A. WHERE DECK SPAN IS PARALLEL TO THE GROUP OF PENETRATIONS: CLEAR SPACING MUST NOT BE LESS THAN 1.5 TIMES THE WIDTH / DIAMETER OF THE LARGER ADJACENT PENETRATION OR 4", WHICHEVER IS GREATER.
   B. WHERE DECK SPAN IS PERPENDICULAR TO THE GROUP OF PENETRATIONS: CLEAR SPACING MUST NOT BE LESS THAN 3 TIMES THE WIDTH OF THE LARGER ADJACENT PENETRATION, OR 8", WHICHEVER IS GREATER.
3. IF THE SPACING REQUIREMENTS BELOW CANNOT BE MET, THE CONTRACTOR MUST BE PERMITTED TO REINFORCE THE SLAB PER THE TYPICAL FLOOR SLAB REINFORCING DETAIL AT OPENINGS LARGER THAN 6".
4. BLOCKOUTS OR DRILLED CORES ARE PERMITTED, HOWEVER, FLOOR DECK MUST REMAIN CONTINUOUS AND NOT BE CUT UNTIL CONCRETE HAS BEEN PLACED AND HAS REACHED 75% OF IT'S SPECIFIED DESIGN STRENGTH.

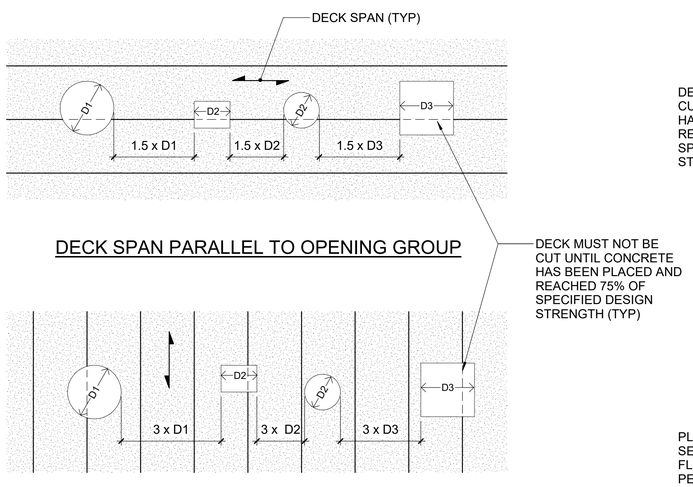

DECK SPAN PARALLEL TO OPENING GROUP

DECK SPAN PERPENDICULAR TO OPENING GROUP

A1 TYPICAL SPACING REQUIREMENTS FOR FLOOR PENETRATIONS 6" WIDE OR LESS
NTS

NOTES:

1. SEE MECHANICAL, ELECTRICAL, PLUMBING, AND FIRE PROTECTION DRAWINGS FOR LOCATIONS AND SIZE OF FLOOR PENETRATIONS NOT SPECIFICALLY DETAILED ON THE STRUCTURAL FRAMING PLANS.
2. PENETRATIONS, GREATER THAN 6", BUT LESS THAN OR EQUAL TO 24" IN ANY DIRECTION ARE PERMITTED IN THE ELEVATED SLAB ON METAL DECK WITHOUT ADDITIONAL STRUCTURAL STEEL FRAMING, PROVIDED THE SLAB IS REINFORCED AS INDICATED BELOW.
3. A MINIMUM OF (1) LOW FLUTE MUST BE PROVIDED BETWEEN PENETRATIONS, WITH MINIMUM SPACING BETWEEN PENETRATIONS OF 1/2 THE LARGER OPENING WIDTH, OR 8", WHICHEVER IS GREATER.

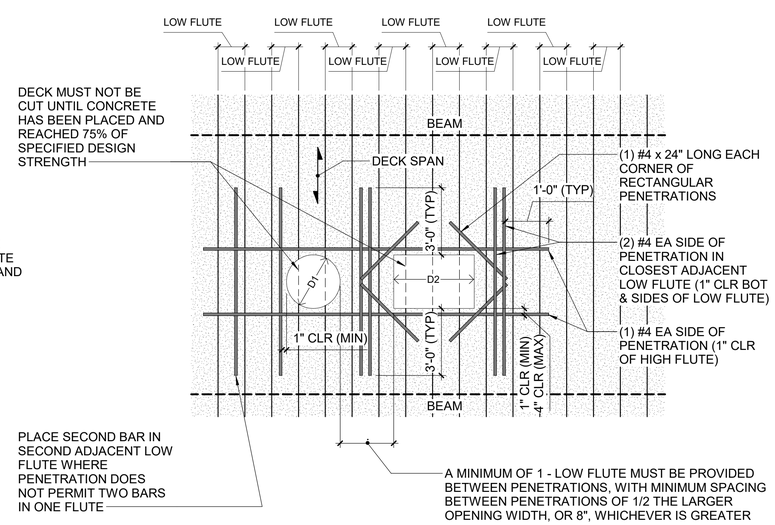

A2 TYPICAL SPACING REQUIREMENTS FOR FLOOR PENETRATIONS 6" OR WIDER
NTS

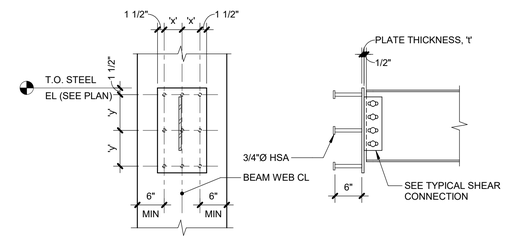

EMBED PLATE DIMENSIONS						
SUPPORTED BEAM	PLATE THICKNESS 't'	NUMBER VERTICAL COLUMNS	NUMBER HORIZONTAL ROWS	TOTAL QTY HSA'S	'x'	'y'
W16	1/2"	3	3	9	4"	8"

B1 SHEAR CONNECTION TO EMBED PLATE
3/4" = 1'-0"

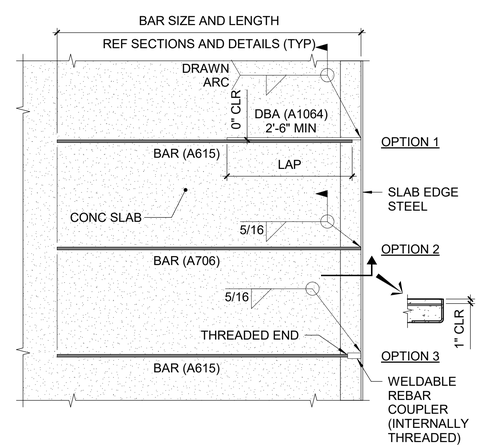

A3 TYPICAL REINFORCING TO SLAB EDGE STEEL ATTACHMENT DETAILS
NTS

Susan Hatchell
Landscape Architecture, PLLC
711 W. North Street, Raleigh, NC 27603
p: 919-838-9600 f: 919-838-9700

lynchmykins now IMEG
301 N WEST STREET, SUITE 105
RALEIGH, NC 27603
919.782.1833 www.imegcorp.com

TYPICAL DETAILS

LAKE MYRA COUNTY PARK
Wake County, NC

NORTH CAROLINA PROFESSIONAL SEAL 044996 ENGINEER SCOTT M. FRANCIS
07/27/2026

REVISIONS

lynchmykins now IMEG
301 N WEST STREET, SUITE 105
RALEIGH, NC 27603
919.782.1833 www.imegcorp.com

IMEG RESERVES PROPRIETARY RIGHTS, INCLUDING COPYRIGHTS. TO THIS DRAWING AND THE DATA SHOWN THEREON. SAID DRAWING AND/OR DATA ARE THE EXCLUSIVE PROPERTY OF IMEG AND SHALL NOT BE USED OR REPRODUCED FOR ANY OTHER PROJECT WITHOUT THE EXPRESS WRITTEN APPROVAL AND PARTICIPATION OF IMEG. ©2025 IMEG CONSULTANTS CORP.

North Carolina Design Registration #F-1507

Date07/27/2026

PC-S503

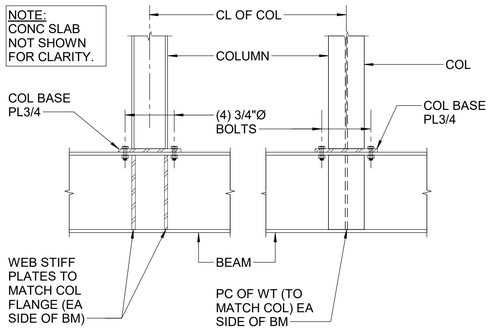

COLUMN WEB PARALLEL

COLUMN WEB PERPENDICULAR

C1 TYPICAL TRANSFER BEAM DETAILS
NTS

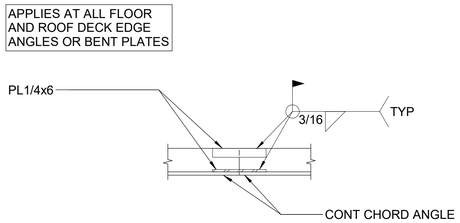

C2 TYPICAL ANGLE DIAPHRAGM CHORD SPLICE DETAIL
NTS

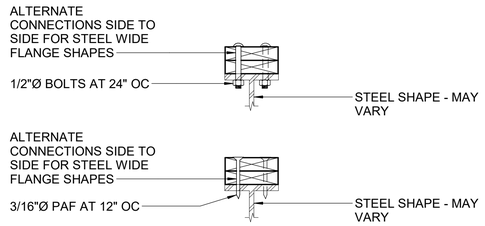

C3 TYPICAL CONNECTION OF WOOD BLOCKING TO STEEL FRAMING DETAILS
NTS

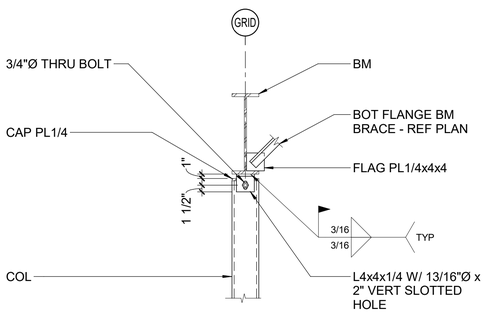

B1 TYPICAL COLUMN BRACE DETAIL
NTS

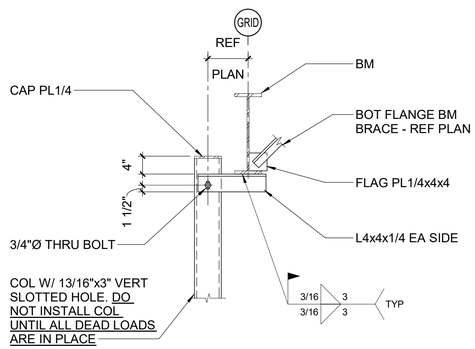

B2 TYPICAL COLUMN BRACE DETAIL
NTS

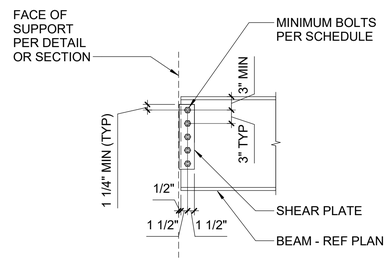

TYPICAL SHEAR PLATE

B3 TYPICAL SHEAR PLATE CONNECTION DETAIL
NTS

MINIMUM BEAM REACTION SCHEDULE

BEAM SIZE	DESIGN REACTION (LRFD)	MIN # OF BOLTS
W8 & W10	20 KIPS	2
W12, W14, & W16	35 KIPS	3
W18	50 KIPS	4
W21	60 KIPS	5
W24 & W27	75 KIPS	6
W30 AND GREATER	75 KIPS	6

NOTES:
1. REFERENCE "STRUCTURAL STEEL NOTES" IN GENERAL NOTES FOR ADDITIONAL INFORMATION.
2. DESIGN CONNECTIONS FOR THE REACTIONS SHOWN ON PLAN. FOR REACTIONS NOT SHOWN ON PLAN, DESIGN CONNECTIONS FOR THE MINIMUM LOADS AND BOLTS INDICATED IN THE SCHEDULE ABOVE.

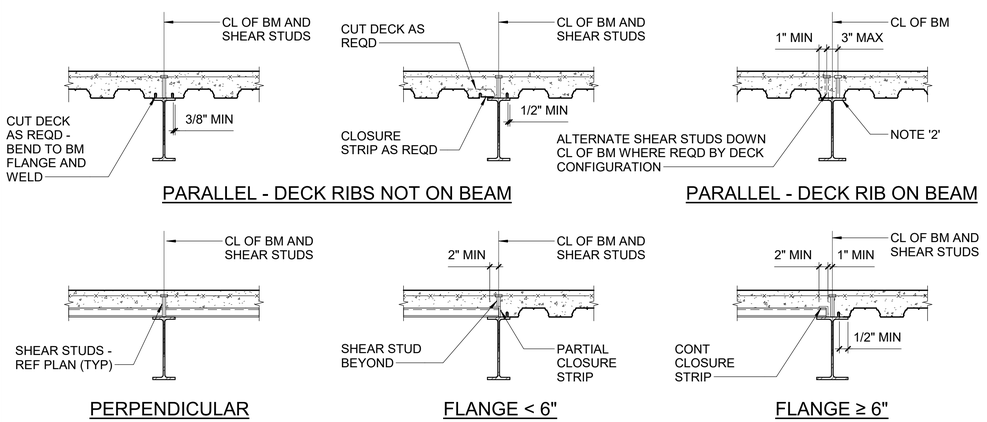

PARALLEL - DECK RIBS NOT ON BEAM

PARALLEL - DECK RIB ON BEAM

PERPENDICULAR

FLANGE < 6"

FLANGE ≥ 6"

A1 TYPICAL COMPOSITE SLAB DETAILS
NTS

COMPOSITE SLAB DETAIL NOTES:
1. SPACE STUDS EQUALLY ALONG BEAM FLANGE IN DECK RIBS. WHERE THE NUMBER OF STUDS EXCEEDS THE NUMBER OF DECK RIBS, PLACE (2) STUDS IN DECK RIBS STARTING AT BEAM ENDS AND WORKING TOWARDS THE MIDDLE. AN EQUAL NUMBER OF STUDS MUST BE PLACED ON EACH HALF OF THE BEAM.
2. FOR BMS W/ A FLANGE THICKNESS OF 1/4" OR LESS, CUT DECK RIB AS REQD AND WELD STUDS DIRECTLY ON BM CL.

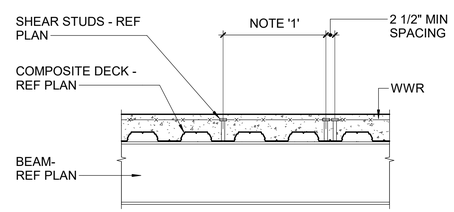

TYPICAL COMPOSITE BEAM PROFILE

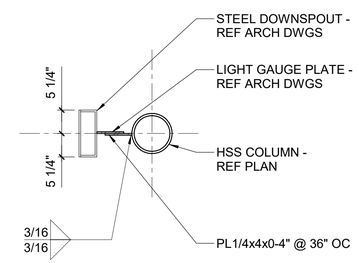

A2 TYPICAL DOWNSPOUT SUPPORT DETAIL
3/4" = 1'-0"

Susan Hatchell
Landscape Architecture, PLLC
711 W. North Street, Raleigh, NC 27603
p: 919-838-9600 f: 919-838-9700

lynchmykins now IMEG
301 N WEST STREET, SUITE 105
RALEIGH, NC 27603
919.782.1833 www.imegcorp.com

TYPICAL DETAILS

LAKE MYRA COUNTY PARK
Wake County, NC

NORTH CAROLINA PROFESSIONAL SEAL 044996 ENGINEER SCOTT M. FRANCIS
07/27/2026

REVISIONS

lynchmykins now IMEG
301 N WEST STREET, SUITE 105
RALEIGH, NC 27603
919.782.1833 www.imegcorp.com

IMEG RESERVES PROPRIETARY RIGHTS, INCLUDING COPYRIGHTS. TO THIS DRAWING AND THE DATA SHOWN THEREON. SAID DRAWING AND/OR DATA ARE THE EXCLUSIVE PROPERTY OF IMEG AND SHALL NOT BE USED OR REPRODUCED FOR ANY OTHER PROJECT WITHOUT THE EXPRESS WRITTEN APPROVAL AND PARTICIPATION OF IMEG. ©2025 IMEG CONSULTANTS CORP.

North Carolina Design Registration #F-1507

Date07/27/2026

PC-S504

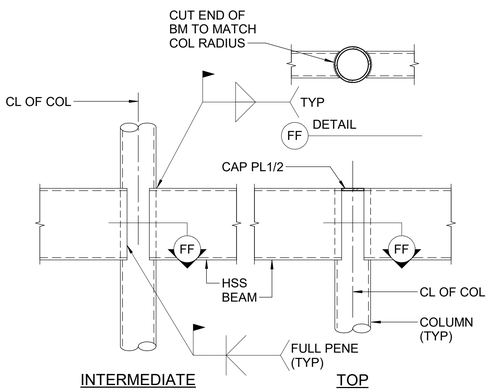

C1 TYPICAL HSS BEAM TO HSS ROUND COLUMN MOMENT CONNECTION DETAILS

NTS

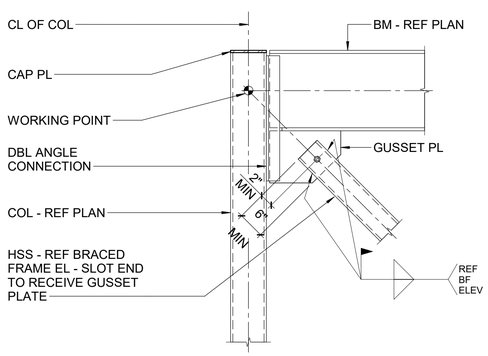

B1 DETAIL

NTS

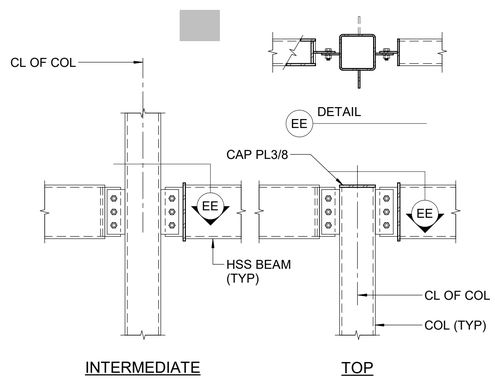

C2 TYPICAL HSS BEAM TO HSS COLUMN CONNECTION DETAILS

NTS

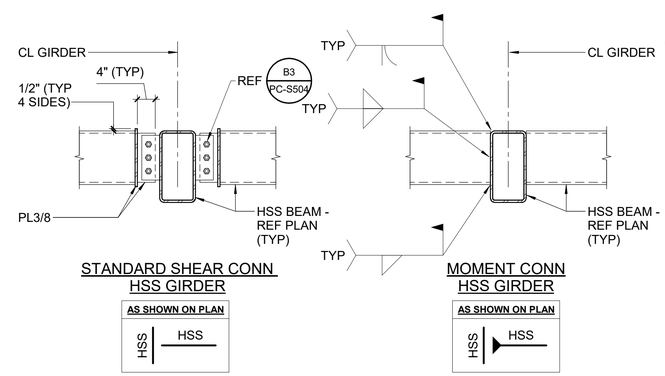

C3 TYPICAL HSS BEAM TO GIRDER CONNECTION DETAILS

NTS

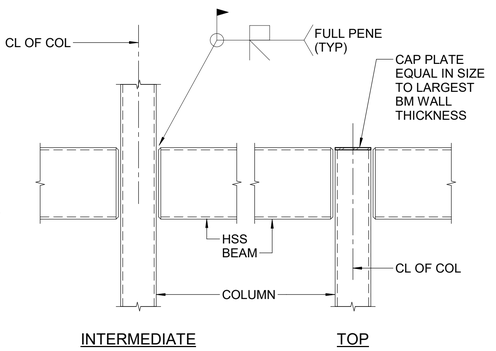

C4 TYPICAL HSS BEAM TO HSS COLUMN MOMENT CONNECTION DETAILS

NTS

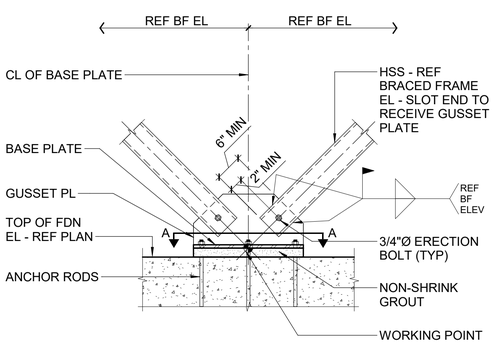

A1 DETAIL

NTS

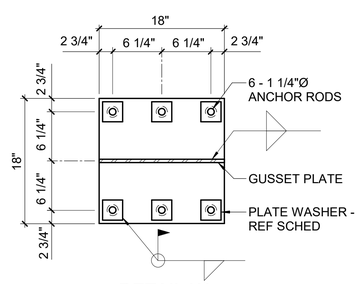

DETAIL 'A'
PL 1x18x18

A2 DETAIL

NTS

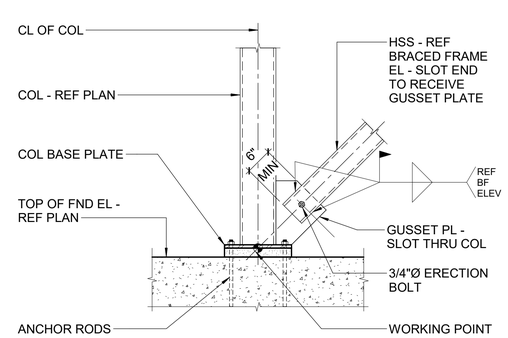

A3 DETAIL

NTS

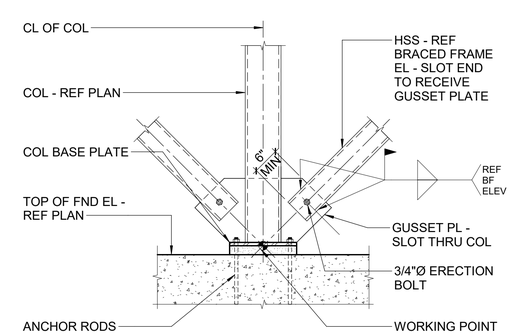

NORTH CAROLINA PROFESSIONAL SEAL 044996 ENGINEER SCOTT M. FRANCIS
07/27/2026

lynchmykins now IMEG
301 N WEST STREET, SUITE 105
RALEIGH, NC 27603
919.782.1833 www.imegcorp.com

IMEG RESERVES PROPRIETARY RIGHTS, INCLUDING COPYRIGHTS, TO THIS DRAWING AND THE DATA SHOWN THEREON. SAID DRAWING AND/OR DATA ARE THE EXCLUSIVE PROPERTY OF IMEG AND SHALL NOT BE USED OR REPRODUCED FOR ANY OTHER PROJECT WITHOUT THE EXPRESS WRITTEN APPROVAL AND PARTICIPATION OF IMEG. ©2025 IMEG CONSULTANTS CORP.
North Carolina Design Registration #F-1507

Susan Hatchell
Landscape Architecture, PLLC
711 W. North Street, Raleigh, NC 27603
p: 919-838-9600 f: 919-838-9700

lynchmykins now IMEG
301 N WEST STREET, SUITE 105
RALEIGH, NC 27603
919.782.1833 www.imegcorp.com

TYPICAL DETAILS

LAKE MYRA COUNTY PARK
Wake County, NC

REVISIONS

Date07/27/2026

PC-S505

General Plan Symbols

- Plan Revision Number
- Detail Number on Sheet
- Sheet Number Where Detail is Placed
- 1 — Keynote Symbol
- Continuation Symbol
- Point Where New Connects To Existing
- ROOM 1 — Room Name / Number
- Area Being Demolished
- Area Not In Contract

Abbreviations

Ø	ROUND
ABV	ABOVE
AC	AIR CONDITIONING
AD	AREA DRAIN
ADD	ADDENDUM
AFF	ABOVE FINISHED FLOOR
AFUE	ANNUAL FUEL UTILIZATION EFFICIENCY
ALT	ALTERNATE
AP	ACCESS PANEL
ARCH	ARCHITECT/ARCHITECTURAL
BFF	BELOW FINISHED FLOOR
BLW	BELOW
BTU	BRITISH THERMAL UNITS
BTUH	BRITISH THERMAL UNITS PER HOUR
CAP	CAPACITY
CB	CATCH BASIN
CFM	CUBIC FEET PER MINUTE
CLG	CEILING
CO	CLEAN OUT
CW	COLD WATER
D	DEGREE
DB	DRY BULB
DIA	DIAMETER
DN	DOWN
DW	DISTILLED WATER
EA	EACH
EAT	ENTERING AIR TEMPERATURE
ELEC	ELECTRICAL
EQUIP	EQUIPMENT
EWC	ELECTRIC WATER COOLER
EWT	ENTERING WATER TEMPERATURE
E/A	EXHAUST AIR
EXIST	EXISTING
F	DEGREES FAHRENHEIT
FCO	FLOOR CLEAN OUT
FD	FLOOR DRAIN
FDC	FIRE DEPARTMENT CONNECTION
FL	FLOOR
FO	FUEL OIL
FOV	FUEL OIL VENT
FOR	FUEL OIL RETURN
FOS	FUEL OIL SUPPLY
FPM	FEET PER MINUTE
FS	FLOOR SINK
FT	FOOT/FEET
FTR	FIN TUBE RADIATION
GAL	GALLON
GF	GAS-FIRED
GC	GENERAL CONTRACTOR
GPM	GALLONS PER MINUTE
GW	GREASE WASTE
HB	HOSE BIB
HP	HORSE POWER
HTG	HEATING
HTR	HEATER
HW	HOT WATER
HYD	HYDRANT
ID	INDIRECT
IN	INCH
INV	INVERT
LB	POUND
LB/HR	POUNDS PER HOUR
LAT	LEAVING AIR TEMPERATURE
LP	LOW PRESSURE
LPG	LIQUEFIED PETROLEUM GAS
LVR	LOUVER
LWT	LEAVING WATER TEMPERATURE
M/A	MIXED AIR
MAX	MAXIMUM
MBH	ONE THOUSAND BTU PER HOUR
MCF	ONE THOUSAND CUBIC FEET
MD	MOTORIZED DAMPER
MECH	MECHANICAL
MFR	MANUFACTURER
MIN	MINIMUM
MISC	MISCELLANEOUS
MTR	MOTOR
MU/A	MAKE-UP/AIR
NC	NOISE CRITERIA
NC	NORMALLY CLOSED
NIC	NOT IN CONTRACT
NO	NUMBER
NO	NORMALLY OPEN
NTS	NOT TO SCALE
O	OXYGEN
O/A	OUTSIDE AIR
ORD	OVERFLOW ROOF DRAIN
PD	PRESSURE DROP
PIV	POST INDICATOR VALVE
PLBG	PLUMBING
PRESS	PRESSURE
PRV	PRESSURE REDUCING VALVE
PSI	POUNDS PER SQUARE INCH
PSIG	POUNDS PER SQUARE INCH GAUGE
PWR	POWER
R	DUCT RISER
R/A	RETURN AIR
RCP	RADIANT CEILING PANEL
RD	ROOF DRAIN
REC	RECESSED
RED	REDUCER
RH	RELATIVE HUMIDITY
RL/A	RELIEF AIR
RM	ROOM
RPM	REVOLUTIONS PER MINUTE
RW	RAIN WATER
SF	SQUARE FOOT
S/A	SUPPLY AIR
SAN	SANITARY
SF	SQUARE FOOT
SD	SMOKE DAMPER
SM	SURFACE MOUNT
SP	STANDPIPE
SP	STATIC PRESSURE
STM	STEAM
T	THERMOSTAT
TD	TEMPERATURE DROP
TDR	TRENCH DRAIN
TEMP	TEMPERATURE
TYP	TYPICAL
UG	UNDERGROUND
VAC	VACUUM
V	VENT
VAV	VARIABLE AIR VOLUME
VENT	VENTILATION
VTR	VENT THROUGH ROOF
W	WASTE
WB	WET BULB
WCO	WALL CLEAN OUT
WH	WALL HYDRANT

Equipment Abbreviations

AC	AIR CONDITIONING UNIT
ACCU	AIR COOLING CONDENSING UNIT
AHU	AIR HANDLING UNIT
AS	AIR SEPARATOR
B	BOILER
CH	CHILLER
CT	COOLING TOWER
CUH	CABINET UNIT HEATER
CHWP	CHILLED WATER PUMP
DBP	DOMESTIC WATER BOOSTER PUMP
DC	DUCT MOUNTED COIL
DCP	DOMESTIC WATER CIRCULATING PUMP
EF	EXHAUST FAN
EDC	ELECTRIC DUCT COIL
ET	EXPANSION TANK
EWH	ELECTRIC WATER HEATER
FCU	FAN COIL UNIT
FP	FIRE PUMP
GI	GREASE INTERCEPTOR
GRV	GRAVITY ROOF VENTILATOR
HWP	HEATING WATER PUMP
HRU	HEAT RECOVERY UNIT
PRV	POWER ROOF VENTILATOR
RE	RETURN/EXHAUST FAN
RTU	ROOFTOP UNIT
SP	SUMP PUMP
UH	UNIT HEATER
WH	WATER HEATER

* NOTE *

ALL OF GENERAL NOTES ON THIS SHEET ARE TO BE APPLIED TO ALL OTHER DRAWINGS IN THIS SET.THE SYMBOLS AND ABBREVIATIONS SHOWN ON THIS SHEET MAY OR MAY NOT BE USED IN THIS SET OF DRAWINGS.

Plumbing Symbols

Symbol	Description
2"	Nominal Pipe Size
	Above Ground Piping
	Below Ground Piping
1/8" / 12" SLOPE	Pipe Slope (When Applicable)
(E)	Existing Pipe To Remain
	Pipe To Be Demolished
CW	Domestic Cold-Water
NPW	Non-Potable Water
S-CW	Soft Cold-Water
F-CW	Filtered Cold-Water
RO	Reverse Osmosis Water
HW	Domestic Hot-Water
HW 140°	Domestic Hot-Water 140°
HW-R	Hot-Water Recirculation
HW-R 140°	Hot-Water Recirculation 140°
SS	Sanitary Drain
V	Sanitary Vent
WV	Sanitary Wet Vent
CWV	Combination DWV
CD	Condensate Drain
ID	Indirect Drain
GW	Grease Waste
GV	Grease Vent
OW	Oil Waste
OV	Oil Vent
PD	Pump Discharge
SHWR	Solar Water Return
SHWS	Solar Water Supply
SD	Storm Drain
OSD	Storm Overflow
CA	Compressed Air
G	Natural Gas
LP	Liquid Propane
	Pipe Rise / Drop

Pipe Accessory Notes

Symbol	Description
4" FCO	Cleanout
2" BACKWATER	Swing Check
2" CHECK	Check Valve
2" CHECK	Alternate Check Valve
2" BALANCE	Balancing Valve
2" CIRC	Circuit Setter
2" GATE	Gate Valve
2" QUICK	Quick Opening Valve
2" S/O	Ball Valve
2" STRAIN	Fluid Strainer
S 1" GAS-CNTRL	Emergency Gas Shutoff
1" PLUG	Plug Valve
1" GAS COCK	Gas Shutoff Cock
1" REG	Gas Regulator
T/P 1" T/V	Thermostatic Valve
TP PRIMER	Trap Primer
M 2" M-CNTRL	Elec. Control Valve
T/P TMV-XT/P	Mixing Valve
EM TMVEM	Emergency Mixer
2" PRV	Pressure Reducing Valve
W 2" METER	Water Meter
IR 1 1/2" METER	Irrigation Meter
	Double Check Valve
	Reduced Pressure Zone

Plumbing Fixture Notes

Symbol	Description
Floor Drain 0" FD-1 2 DFU	Design Size / Identity Type / Drainage Fixture Units
2" FD-3	Floor Drain w/ Deep Seal Trap
2" FD-3P	Floor Drain w/ Trap Primer "P" Indicates Primer Connection
2" FD-7	Floor Drain w/ Integral Cleanout
3" AD-1	Area Drain (No Trap)
6" DD-1	Deck Drain
3" HD-1	Hub Drain (Funnel Type)
3" FS-4	Floor Sink
8" SD-12	Roof Drain
6" SD-1 2000 SF	Combination Drain / Rainfall Surface Area

Plumbing General Notes

A PITCH UNDERFLOOR SANITARY WASTE PIPING AT 1/8" PER FOOT, UNLESS NOTED OTHERWISE.

B PITCH UNDERFLOOR STORM PIPING 3" AND GREATER AT 1/8" PER FOOT, UNLESS NOTED OTHERWISE. PITCH ALL OTHER STORM PIPING AT 1/4" PER FOOT UNLESS OTHERWISE NOTED.

C FIELD VERIFY LOCATION AND INVERTS OF SITE UTILITIES PRIOR TO INSTALLATION.

D ROUTE DOMESTIC WATER, SANITARY SEWER AND STORM SEWER SERVICES TO SITE UTILITIES 5'-0" FROM BUILDING UNLESS NOTED OTHERWISE. REFER TO CIVIL PLANS.

E WASTE AND VENT PIPING BELOW FLOOR AND THROUGH FLOOR SHALL BE 2" MINIMUM.

F PROVIDE CLEANOUT IN ACCESSIBLE LOCATION AT THE BASE OF ALL PLUMBING RISERS.

Plumbing Notes

1 BEFORE STARTING ANY WORK, VERIFY THE ADEQUACY, LOCATION, SIZE, AND AVAILABILITY OF ALL UTILITIES CONCERNED, INCLUDING SEWER INVERT ELEVATIONS, AND WATER PRESSURE.

2 THESE PLANS ARE DIAGRAMMATIC IN NATURE AND SHALL NOT BE SCALED TO DETERMINE THE EXACT LOCATION OR EXTENT OF THE WORK. CONTRACTOR SHALL VERIFY ALL DIMENSIONS IN THE FIELD PRIOR TO CONSTRUCTION.

3 THE CONTRACTOR SHALL COORDINATE WITH ALL OTHER TRADES FOR CLEARANCES AND WORK INCLUDED PRIOR TO START OF WORK.

4 ALL VENTS THRU ROOF SHALL BE MINIMUM OF TEN FEET FROM ANY FRESH AIR INTAKES.

5 CLEANOUTS SHALL BE INSTALLED PER CODE REQUIREMENTS.

6 PENETRATIONS OF RATED ASSEMBLIES SHALL BE FIRE STOPPED. FIRE STOPPING SHALL BE AN APPROVED MATERIAL AS PRESCRIBED IN STATE. FIRE MARSHALL STANDARD 43-1, AND SHALL BE U.L. LISTED.

7 COORDINATE WITH ELECTRICAL SECTION PRIOR TO ORDERING EQUIPMENT FOR AVAILABLE VOLTAGE AT EQUIPMENT LOCATIONS.

8 ALL FIXTURES SHALL BE PROTECTED DURING CONSTRUCTION FROM ANY DAMAGE. REFINISHED FIXTURES WILL NOT BE ACCEPTABLE UNDER ANY CONDITIONS.

9 HANDICAPPED USE PLUMBING FIXTURES SHALL BE MOUNTED AT REQUIRED HEIGHTS AND WITH ALL RELATED ACCESSORIES AS REQUIRED BY THE ADMINISTRATIVE AUTHORITIES.

10 ALL HOSE BIBBS SHALL HAVE AN APPROVED VACUUM BREAKER.

11 PROVIDE FLASHING AND/OR COUNTER FLASHING OF ALL EXTERIOR PENETRATIONS.

12 UNLESS SPECIFICALLY SHOWN ON THESE PLANS, NO STRUCTURAL MEMBER SHALL BE CUT, DRILLED, NOTCHED OR WELDED WITHOUT PRIOR WRITTEN AUTHORIZATION FROM THE STRUCTURAL ENGINEER.

13 WATER SUPPLY PIPING BELOW GRADE UNDER CONCRETE SLABS SHALL BE INSTALLED SUCH THAT NO JOINTS ARE LOCATED BENEATH THE SLAB. WHERE NECESSARY, PROVIDE OFFSET UP IN FINISHED WALL OR SIMILAR TO ACCOMMODATE JOINTS. PROVIDE LOCKING ACCESS PANEL UNLESS DIRECTED OTHERWISE. COORDINATE FINISH WITH ARCHITECT.

14.1 WATER CLOSET = 1.28 GPF MAX

14.2 URINAL = 0.125 GPF MAX

14.3 SHOWERHEAD = 1.8 GPM MAX

14.4 LAVATORY FAUCETS = 0.5 GPM MAX

14.5 SINK FAUCETS = 1.8 GPM MAX

15 HANGERS, CLAMPS AND GUIDES FURNISHED FOR SUPPORT OF NON-METALLIC PIPES SHALL BE PADDED WITH 1/8" THICK RUBBER, NEOPRENE, OR SOFT RESILIENT CLOTH.

16 COORDINATE WITH MECHANICAL AND ELECTRICAL CONTRACTORS TO ENSURE PROPER CLEARANCE ABOVE ELECTRICAL SWITCHBOARDS, SWITCHGEAR, PANELBOARDS, AND MOTOR CONTROL CENTERS WHERE REQUIRED BY CALIFORNIA ELECTRICAL CODE SECTION 110.26(E)(1) AND TO PROVIDE DRIP PANS OVER ELECTRICAL SERVICE EQUIPMENT, SWITCH GEAR, AND INDUSTRIAL CONTROL ASSEMBLIES WHERE REQUIRED BY CALIFORNIA ELECTRICAL CODE SECTION 110.34(F).

Project Requirements

A COORDINATE INSTALLATION OF PIPING, DUCTWORK, CONDUIT, LIGHTS, CABLE TRAY, STRUCTURE, AND EQUIPMENT TO PREVENT CONFLICTS.

B FINAL PRODUCT SHALL BE A COMPLETE AND FUNCTIONING SYSTEM, AND SHALL CONFORM TO ALL REQUIREMENTS OF APPLICABLE FEDERAL, STATE, AND LOCAL CODES, INCLUDING BUT NOT LIMITED TO THE INTERNATIONAL BUILDING CODE AND INTERNATIONAL MECHANICAL CODE.

C LOCATE EQUIPMENT REQUIRING ACCESS 2'-0" MAXIMUM ABOVE CEILING.

D PENETRATIONS OF RATED ASSEMBLIES SHALL BE FIRE STOPPED. FIRE STOPPING SHALL BE AN APPROVED MATERIAL AS PRESCRIBED IN CSFM STANDARD 43-1 AND SHALL BE U.L. LISTED.

E PROVIDE SLEEVES AND/OR OPENINGS TO RUN PIPES THROUGH FOUNDATIONS, FLOORS, WALLS, AND ROOF.

F MAINTAIN CLEAR ACCESS TO SERVICE EQUIPMENT AND OTHER ACCESSORIES REQUIRING SERVICE, VISUAL INSPECTION OR HAND OPERATION. WHERE INDICATED OR REQUIRED, PROVIDE ACCESS PANELS OF THE TYPE SELECTED TO SUIT MATERIALS IN WHICH INSTALLED.

G REFER TO HVAC SERIES DRAWINGS FOR GAS AND A.C. CONDENSATE DRAIN PIPING.

H PIPE SIZES SHOWN SHALL BE CONTINUED IN THE DIRECTION OF FLOW UNTIL ANOTHER SIZE IS SHOWN.

I FOR DETAILS, EQUIPMENT CONNECTIONS, AND PIPE SIZES NOT SHOWN ON THE SEGMENTS, REFER TO DETAILS, SCHEDULES, AND SPECIFICATIONS.

J INSTALL ALL EQUIPMENT IN ACCORDANCE WITH THE RESPECTIVE MANUFACTURER'S WRITTEN INSTALLATION INSTRUCTIONS, AT A LEVEL OF QUALITY AND WORKMANSHIP CONSISTENT WITH THE SPECIFICATIONS.

K LOCATIONS OF PIPING AND EQUIPMENT AS INDICATED ON THE DRAWING, ARE APPROXIMATE AND SUBJECT TO MINOR ADJUSTMENTS IN THE FIELD. WORK SHALL BE COORDINATED WITH ALL OTHER TRADES TO AVOID INTERFERENCE IN THE FIELD.

L INSTALL EXPOSED PIPING AS HIGH AS PRACTICAL IN ROOMS WITHOUT CEILINGS.

M THE CONTRACTOR'S WORK SCHEDULE SHALL BE SUBMITTED TO AND APPROVED BY THE OWNER.

N PRIOR TO STARTING WORK, SUBMIT SHOP DRAWINGS FOR ALL PLUMBING FIXTURES,

O CONTRACTOR SHALL OBTAIN AND PAY FOR ALL NECESSARY PERMITS AND SHALL ARRANGE FOR ALL INSPECTIONS AS REQUIRED.

P PROVIDE ONE YEAR WARRANTY FOR ALL WORKMANSHIP AND MATERIALS AFTER THE DATE OF FINAL ACCEPTANCE.

PLUMBING FIXTURE SCHEDULE

MARK	ITEM	DESCRIPTION	C.W.	H.W.	WASTE	VENT	REMARKS
CO-1	FLOOR CLEANOUT	CAST IRON FLOOR CLEANOUT WITH ANCHOR FLANGE, STAINLESS STEEL ACCESS COVER AND PLUG ASSEMBLY WITH PRIMARY GASKET SEAL.	-	-	4"	-	
EWC-1	DRINKING FOUNTAIN (OUTDOOR)	WALL MOUNTED STAINLESS STEEL DRINKING FOUNTAIN, BI-LEVEL, FILTERLESS, FREEZE RESISTANT AND NON-REFRIGERATED, PUSH BUTTON BUBBLER, ADA COMPLIANT.	1/2"	-	1 1/2"	1 1/2"	
EWC-2	ELECTRIC WATER COOLER	WALL MOUNTED, BI-LEVEL, 8 GPH CAPACITY WITH BOTTLE FILLER, FILTERED, FREEZE RESISTANT, STAINLESS STEEL TOP, ADA COMPLIANT. SINK SHALL BE WINTERIZED BY DRAINING SUPPLY LINES. COVER SINK TO PROTECT FROM ELEMENT DUE TO COLD CONDITIONS. WASTE PIPING SHALL BE DRAINED.	1/2"	-	1 1/2"	1 1/2"	WATER SUPPLY PIPING TO BE HEAT TRACED
EWH-1	ELECTRIC WATER HEATER	ELECTRIC WATER HEATER, 80 GAL. STORAGE CAPACITY, 10 KW, 208V / 3 PHASE, 41 GPH @ 100 DEGREES RISE. MAXIMUM SET POINT IS 110 DEGREES.	3/4"	3/4"	-	-	WATER SOURCE HEAT PUMP
EXP-1	EXPANSION TANK	EXPANSION TANK, IN-LINE DESIGN WITH 3/4" CONNECTION, DRAWN- STEEL TANK, BUTYL DIAPHRAGM, FIELD ADJUSTABLE 40 PSI AIR CHARGE, 4.55 GAL. CAPACITY.	3/4"	-	-	-	
FD-1	FLOOR DRAIN	CAST IRON BODY WITH ANCHOR FLANGE, WEEPHOLES, HEAVY DUTY STAINLESS STEEL STRAINER, AND MEMBRANE CLAMP.	-	-	4"	2"	
HB-1	HOSE BIBB	AUTOMATIC DRAINING WITHIN TAMPER RESISTANT BRASS BOX, WALL CLAMP, AND BACKFLOW PROTECTED.	3/4"	-	-	-	
ICE-1	REFRIGERATOR ICE MAKER	ICE MAKER METAL BOX, ONE-PIECE RECESSED, ONE TURN SHUT-OFF SUPPLY, SNAP ON FACE PLATE.	1/2"	-	-	-	
LAV-1	LAVATORY (ADA)	COUNTERTOP MOUNTED, VITREOUS CHINA, FRONT OVERFLOW, PROVIDE P-TRAP, SUPPLIES, GRID STRAINER AND SEAMLESS PIPING INSULATORS. PROVIDE & INSTALL SENSOR ACTIVATED BATTERY OPERATED FAUCET, 0.5 GPM, ADA COMPLIANT.	1/2"	1/2"	1 1/2"	1 1/2"	MOUNT 34" TO RIM.
LAV-2	LAVATORY (ADA)	WALL MOUNTED, VITREOUS CHINA, FRONT OVERFLOW, PROVIDE P-TRAP, SUPPLIES, GRID STRAINER AND SEAMLESS PIPING INSULATORS. PROVIDE & INSTALL SENSOR ACTIVATED BATTERY OPERATED FAUCET, 0.5 GPM, ADA COMPLIANT.	1/2"	1/2"	1 1/2"	1 1/2"	MOUNT 31" TO RIM.
MS-1	MOP SINK	TERRAZZO FLOOR MOUNTED MOP RECEPTOR, 24" X 24" X 12", INSTALL WITH SUPPLIES, HOSE CLAMP, MOP HANGER, CHROME STRAINER AND FAUCET WITH INTEGRAL VACUUM BREAKER, DOUBLE STOPS AND BUCKET HOOK WITH WALL BRACE, 2.2 GPM.	1/2"	1/2"	1 1/2"	1 1/2"	
PUIMP-1	RECIRC. PUMP	IN-LINE BOOSTER PUMP , BRONZE BODY, STAINLESS STEEL FACE PLATE, 1/20 HP, 115V, 1 PHASE, 6 GPM @ 10 FEET HEAD, 125 PSI WORKING PRESSURE.	-	1 1/4"	-	-	
SK-1	BREAKROOM SINK (ADA)	DOUBLE COMPARTMENT STAINLESS STEEL SINK, 18 GAUGE, TYPE 304, FAUCET LEDGE WITH 3 HOLES ON 4" CENTERS, INSTALL WITH ONE HANDLE LOW ARC FAUCET, SUPPLIES, P-TRAP, BASKET STRAINER & PIPING INSULATORS, 2.0 GPM,ADA COMPLIANT.	1/2"	1/2"	1 1/2"	1 1/2"	SINGLE LEVER STYLE FAUCET
SK-2	WELLNESS SINK (ADA)	SINGLE COMPARTMENT OVAL COUNTERTOP STAINLESS STEEL SINK, 18 GAUGE, TYPE 304, FAUCET LEDGE WITH 3 HOLES ON 4" CENTERS. INSTALL WITH ONE HANDLE LOW ARC FAUCET, SUPPLIES, P-TRAP, BASKET STRAINER & PIPING INSULATORS, 2.0 GPM. ADA COMPLIANT.	1/2"	1/2"	1 1/2"	1 1/2"	SINGLE LEVER STYLE FAUCET
UR-1	URINAL (ADA)	WALL MOUNTED, VITREOUS CHINA, SIPHON JET FLUSH ACTION. PROVIDE WITH WALL CARRIER AND SENSOR ACTIVATED BATTERY OPERATED FLUSH VALVE. 1.0 GPF, ADA COMPLIANT.	3/4"	-	-	-	MOUNT RIM HEIGHT 17"AFF.
WC-1	WATER CLOSET (ADA)	FLOOR MOUNTED, VITREOUS CHINA, ELONGATED BOWL, GRAVITY FED. PROVIDE WITH SENSOR ACTIVATED BATTERY OPERATED FLUSH VALVE, SUPPLIES AND OPEN SEAT, 1.28 GPF. ADA COMPLIANT.	1"	-	4"	2"	MOUNT RIM HEIGHT 17"AFF.
WC-2	WATER CLOSET	FLOOR MOUNTED, VITREOUS CHINA, ELONGATED BOWL, GRAVITY FED. PROVIDE WITH SENSOR ACTIVATED BATTERY OPERATED MANUAL FLUSH VALVE, SUPPLIES AND OPEN SEAT, 1.28 GPF.	1"	-	4"	2"	MOUNT RIM HEIGHT 15"AFF.
WH-1	WALL HYDRANT	CAST BRASS BOXED WALL MOUNTED HYDRANT, NON FREEZE, AUTOMATIC DRAINING, DUAL CHECK BACK FLOW PROTECTED AND SUPPLIED WITH OPERATING KEY.	3/4"	-	-	-	
WHA-1	WATER HAMMER ARRESTOR	PRE-CHARGED, PERMANENT SEALED AIR CHAMBER. NPT SOLID BRASS ADAPTER.	SEE PLANS	-	-	-	

PARK CENTER PLUMBING SHEET INDEX

PC-P001 PLUMBING COVER SHEET
PC-P101 FIRST FLOOR PLUMBING PLANS
PC-P102 BASEMENT PLUMBING PLANS
PC-P501 PLUMBING RISER DIAGRAMS
PC-P601 PLUMBING DETAILS

Susan Hatchell Landscape Architecture, PLLC
711 W. North Street, Raleigh, NC 27603
p: 919-838-9600 f: 919-838-9700

Wooten
120 North Boylan Avenue • Raleigh, NC 27603-1423
(919) 828-0531 • thewootencompany.com
License Number : F-0115

PLUMBING COVER SHEET

NORTH CAROLINA PROFESSIONAL ENGINEER 027928 SCOTT L. ENNIS
DocuSigned by: 1E0B95366ACF412...
7/24/2026

LAKE MYRA COUNTY PARK
Wake County, NC

REVISIONS

Date: 07/27/26

PC-P001

FIRE RATED WALL LEGEND

2 HR

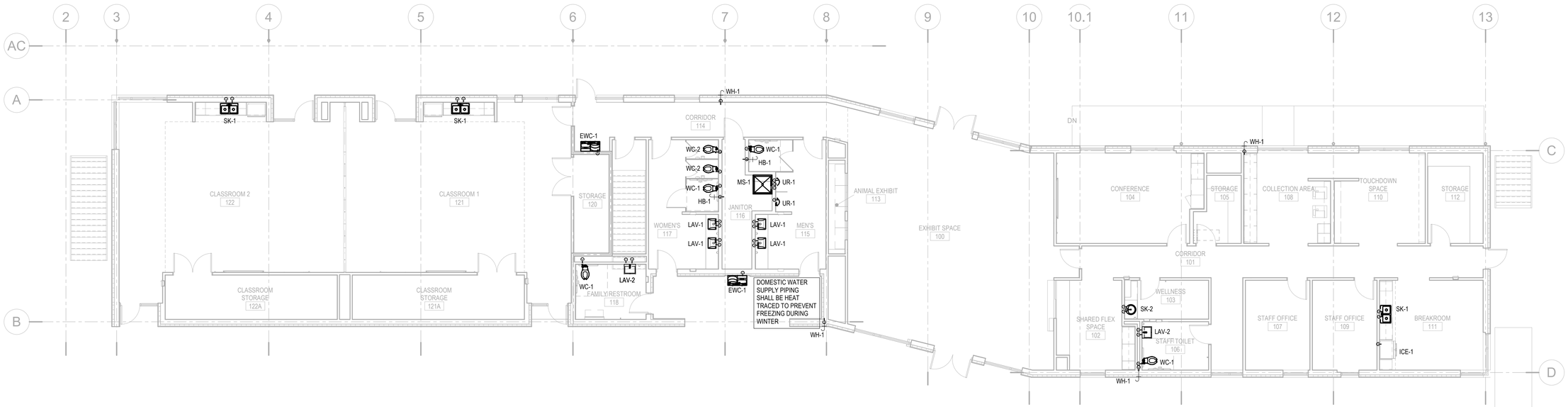

2 PC-P101 FIRST FLOOR DOMESTIC WATER PLAN
1/8" = 1'-0"

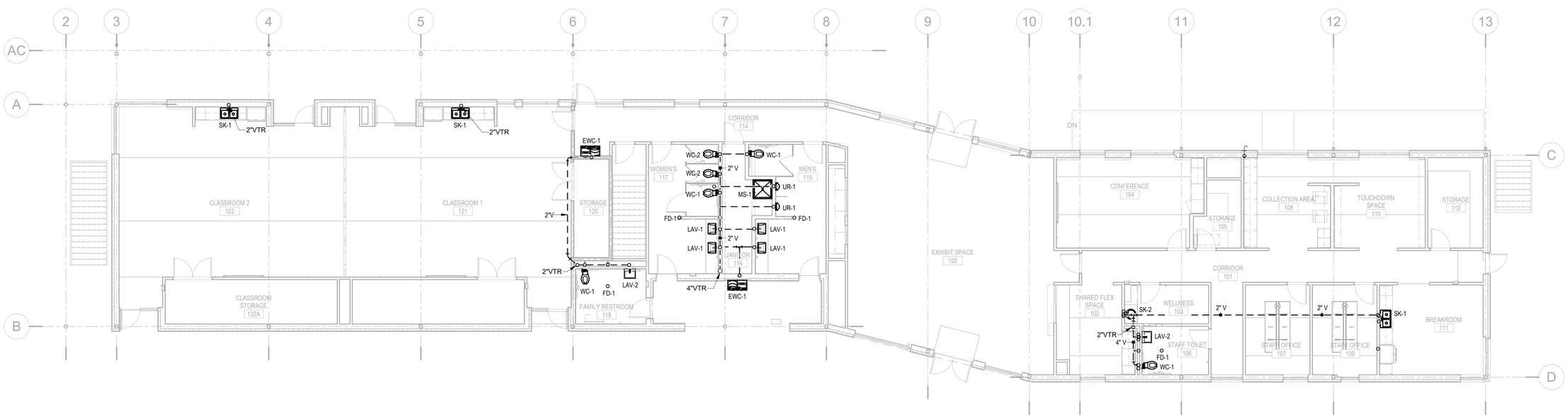

1 PC-P101 FIRST FLOOR DWV PIPING PLAN
1/8" = 1'-0"

Susan Hatchell
Landscape Architecture, PLLC
711 W. North Street, Raleigh, NC 27603
p: 919-838-9600 f: 919-838-9700

Wooten
120 North Boylan Avenue • Raleigh, NC 27603-1423
(919) 828-0531 • thewootencompany.com
License Number : F-0115

FIRST FLOOR PLUMBING PLANS

NORTH CAROLINA PROFESSIONAL ENGINEER SEAL 027928 SCOTT L. ENNIS

DocuSigned by: 1E0B9536 6ACF412...

7/24/2026

LAKE MYRA COUNTY PARK
Wake County, NC

REVISIONS

Date: 07/27/26

PC-P101

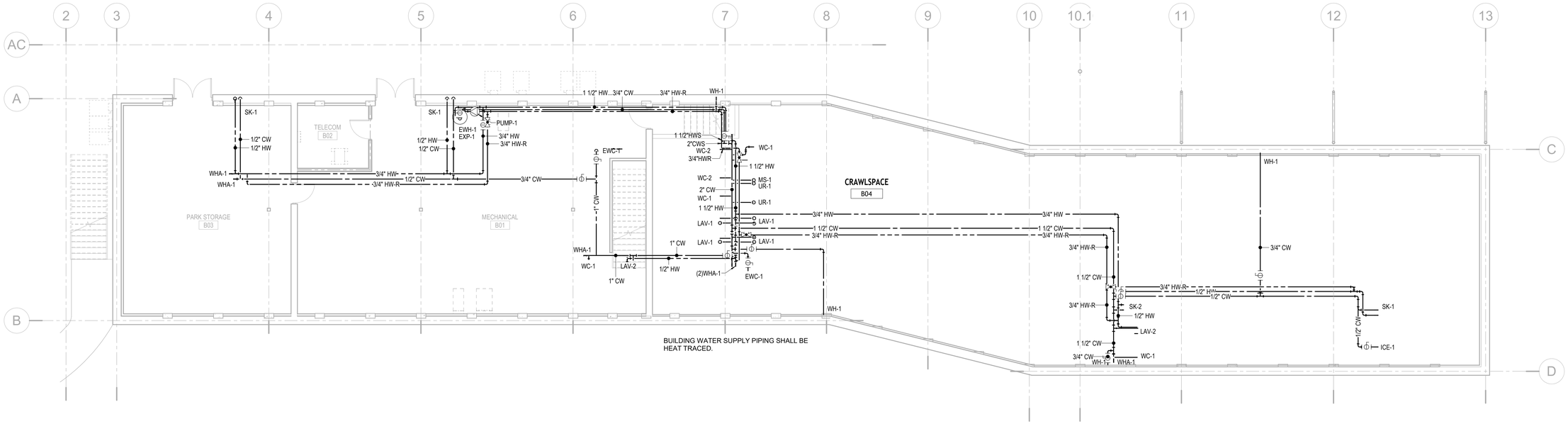

2 PC-P102 BASEMENT/CRAWLSPACE DOMESTIC WATER PLAN
1/8" = 1'-0"

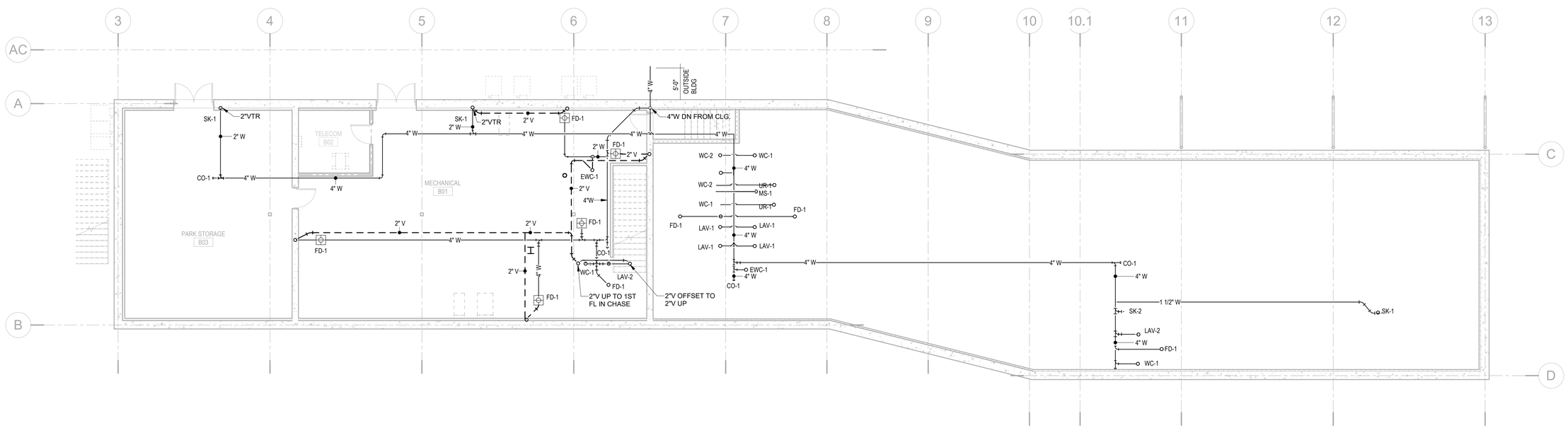

1 PC-P102 BASEMENT/CRAWLSPACE DWV PIPING
1/8" = 1'-0"

Susan Hatchell
Landscape Architecture, PLLC
711 W. North Street, Raleigh, NC 27603
p: 919-838-9600 f: 919-838-9700

Wooten
128 North Boylan Avenue • Raleigh, NC 27603-1423
(919) 828-0531 • thewootencompany.com
License Number : F-0115

BASEMENT PLUMBING PLANS

NORTH CAROLINA PROFESSIONAL ENGINEER SCOTT L. ENNIS
Documents signed by:
DocuSigned by:
1B5B6B5B8AC8412...
7/24/2026

LAKE MYRA COUNTY PARK
Wake County, NC

REVISIONS

Date: 07/27/26

PC-P102

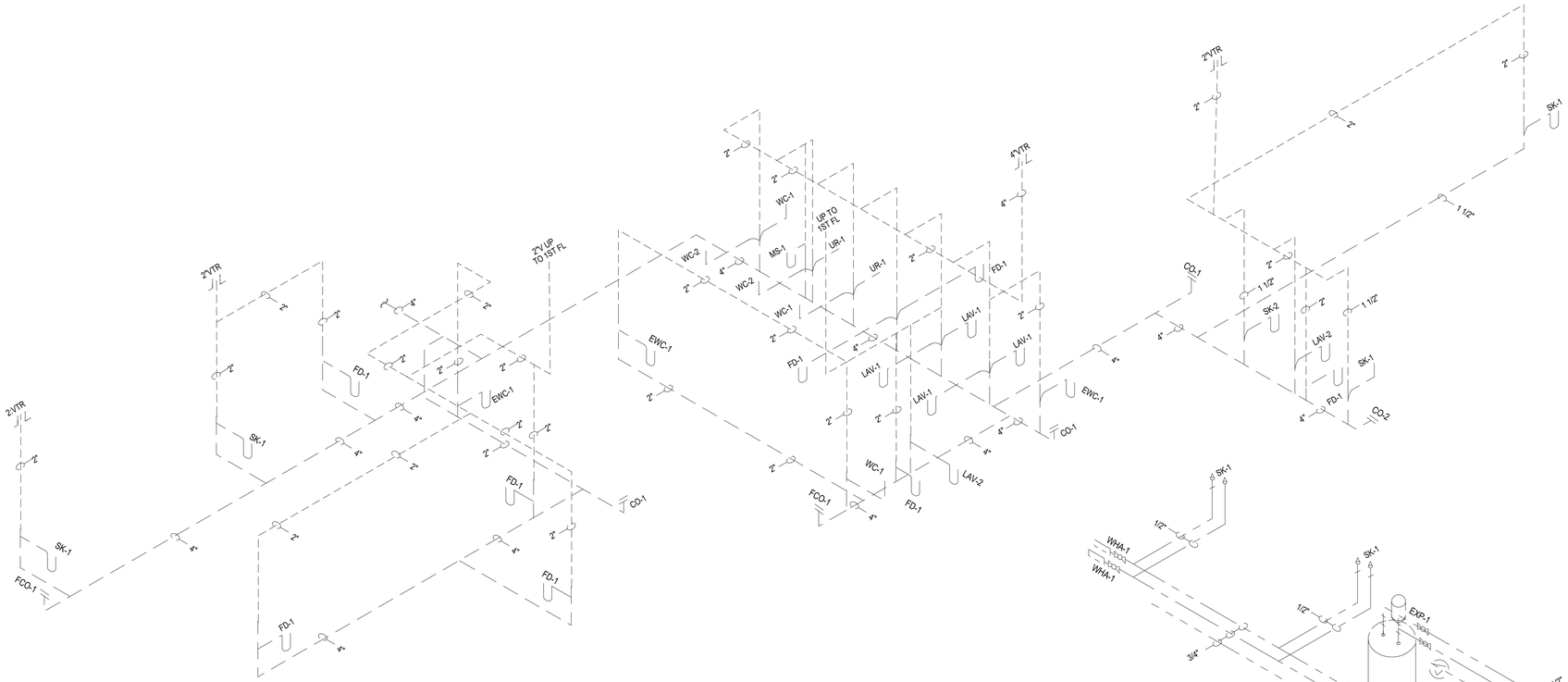

2 PC-P501 PC - WASTE AND VENT RISER DIAGRAM
NOT TO SCALE

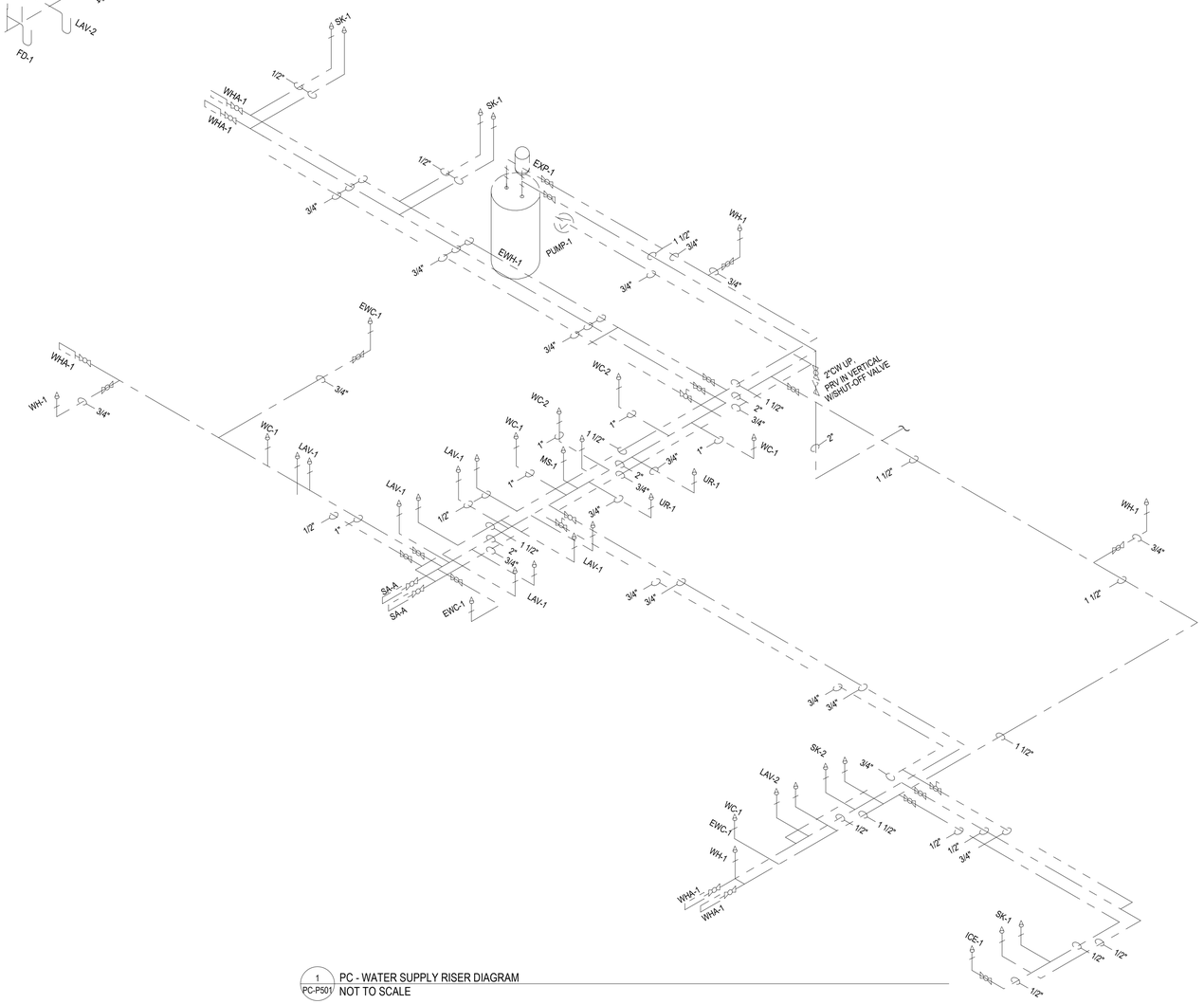

1 PC-P501 PC - WATER SUPPLY RISER DIAGRAM
NOT TO SCALE

Susan Hatchell
Landscape Architecture, PLLC
711 W. North Street, Raleigh, NC 27603
p: 919-838-9600 f: 919-838-9700

Wooten
128 North Boylan Avenue • Raleigh, NC 27603-1423
(919) 828-0531 • thewootencompany.com
License Number : F-0115

PLUMBING RISER DIAGRAMS

NORTH CAROLINA PROFESSIONAL ENGINEER SEAL 027928 SCOTT L. ENNIS
DocuSigned by: 18DB95365ACF412...
7/24/2026

LAKE MYRA COUNTY PARK
Wake County, NC

REVISIONS

Date: 07/27/26

PC-P501

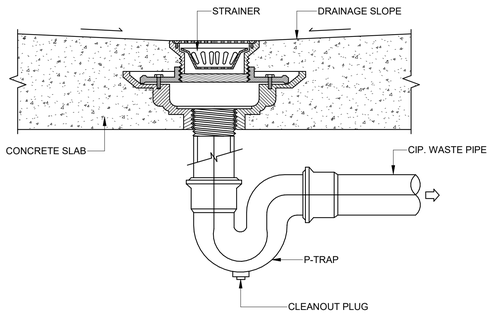

7 PC-P601 FLOOR DRAIN WITH P-TRAP DETAIL
NOT TO SCALE

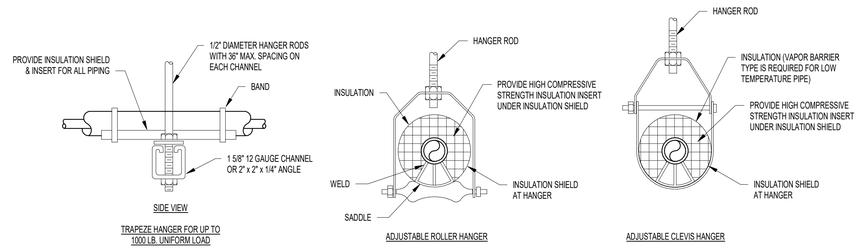

6 PC-P601 PIPE HANGER DETAIL - A
NOT TO SCALE

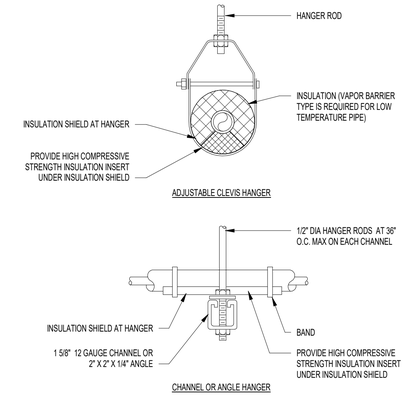

2 PC-P601 PIPE HANGER DETAIL
NOT TO SCALE

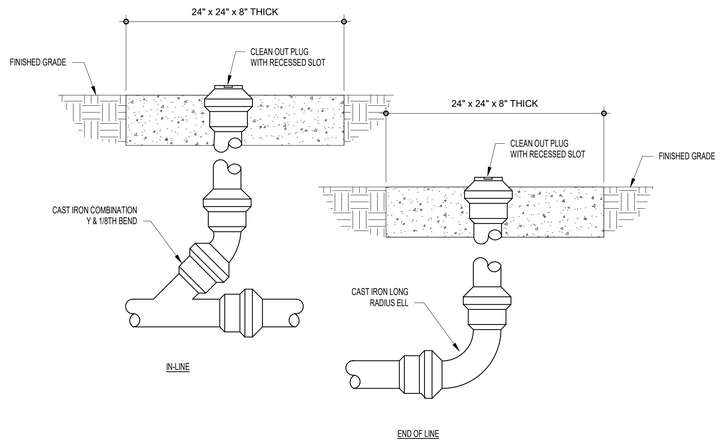

4 PC-P601 EXTERIOR CLEANOUT DETAIL
NOT TO SCALE

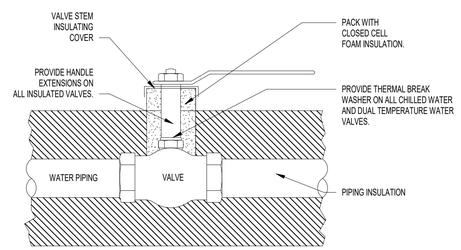

5 PC-P601 TYPICAL BALL VALVE INSTALLATION DETAIL
NOT TO SCALE

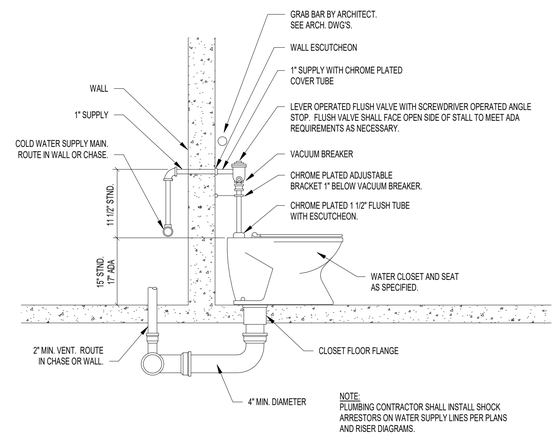

3 PC-P601 FLOOR MOUNTED WATER CLOSET DETAIL
NOT TO SCALE

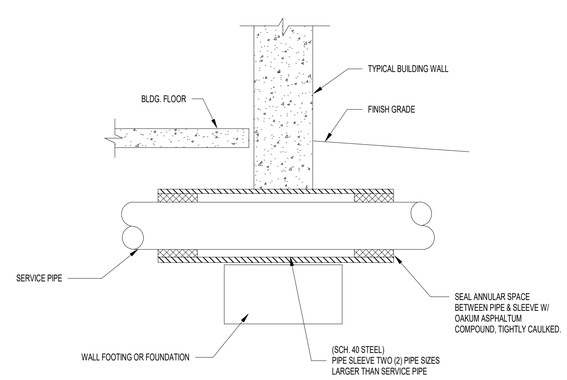

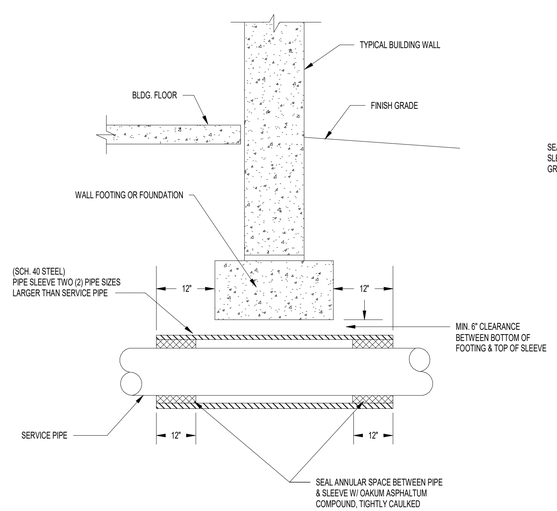

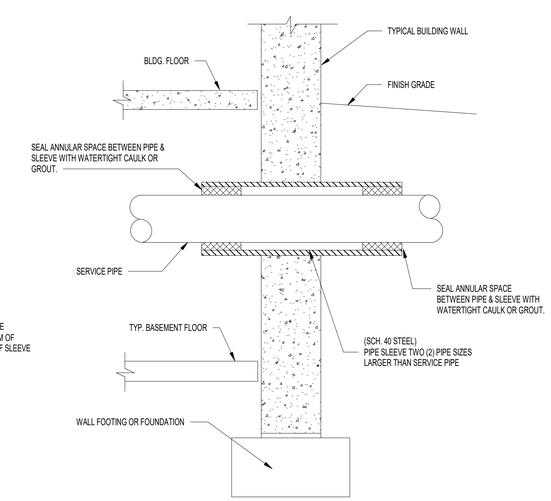

1 PC-P601 TYPICAL PIPE SLEEVE DETAIL
NOT TO SCALE

Susan Hatchell
Landscape Architecture, PLLC
711 W. North Street, Raleigh, NC 27603
p: 919-838-9600 f: 919-838-9700

Wooten
120 North Boylan Avenue • Raleigh, NC 27603-1423
(919) 828-0531 • thewootencompany.com
License Number : F-0115

PLUMBING DETAILS

NORTH CAROLINA PROFESSIONAL ENGINEER SEAL 027928 SCOTT L. ENNIS
DocuSigned by: 1B5B6B3BAACF412...
7/24/2026

LAKE MYRA COUNTY PARK
Wake County, NC

REVISIONS

Date: 07/27/26

PC-P601

General Plan Symbols

- Plan Revision Number
- Detail Number on Sheet
- Sheet Number Where Detail is Placed
- Keynote Symbol (1)
- Continuation Symbol
- Point Where New Connects To Existing
- ROOM 1 — Room Name / Number
- Area Being Demolished
- Area Not In Contract

Abbreviations

Ø	ROUND	LVR	LOUVER
ABV	ABOVE	LWT	LEAVING WATER TEMPERATURE
AC	AIR CONDITIONING	M/A	MIXED AIR
AD	AREA DRAIN	MAX	MAXIMUM
ADD	ADDENDUM	MBH	ONE THOUSAND BTU PER HOUR
AFF	ABOVE FINISHED FLOOR	MCF	ONE THOUSAND CUBIC FEET
AFUE	ANNUAL FUEL UTILIZATION EFFICIENCY	MD	MOTORIZED DAMPER
ALT	ALTERNATE	MECH	MECHANICAL
AP	ACCESS PANEL	MFR	MANUFACTURER
ARCH	ARCHITECT/ARCHITECTURAL	MIN	MINIMUM
BFF	BELOW FINISHED FLOOR	MISC	MISCELLANEOUS
BLW	BELOW	MTR	MOTOR
BTU	BRITISH THERMAL UNITS	MU/A	MAKE-UP/AIR
BTUH	BRITISH THERMAL UNITS PER HOUR	NC	NOISE CRITERIA
CAP	CAPACITY	NC	NORMALLY CLOSED
CB	CATCH BASIN	NIC	NOT IN CONTRACT
CFM	CUBIC FEET PER MINUTE	NO	NUMBER
CLG	CEILING	NO	NORMALLY OPEN
CO	CLEAN OUT	NTS	NOT TO SCALE
CW	COLD WATER	O	OXYGEN
D	DEGREE	O/A	OUTSIDE AIR
DB	DRY BULB	ORD	OVERFLOW ROOF DRAIN
DIA	DIAMETER	PD	PRESSURE DROP
DN	DOWN	PIV	POST INDICATOR VALVE
DW	DISTILLED WATER	PLBG	PLUMBING
EA	EACH	PRESS	PRESSURE
EAT	ENTERING AIR TEMPERATURE	PRV	PRESSURE REDUCING VALVE
ELEC	ELECTRICAL	PSI	POUNDS PER SQUARE INCH
EQUIP	EQUIPMENT	PSIG	POUNDS PER SQUARE INCH GAUGE
EWC	ELECTRIC WATER COOLER	PWR	POWER
EWT	ENTERING WATER TEMPERATURE	R	DUCT RISER
E/A	EXHAUST AIR	R/A	RETURN AIR
EXIST	EXISTING	RCP	RADIANT CEILING PANEL
F	DEGREES FAHRENHEIT	RD	ROOF DRAIN
FCO	FLOOR CLEAN OUT	REC	RECESSED
FD	FLOOR DRAIN	RED	REDUCER
FDC	FIRE DEPARTMENT CONNECTION	RH	RELATIVE HUMIDITY
FL	FLOOR	RL/A	RELIEF AIR
FO	FUEL OIL	RM	ROOM
FOV	FUEL OIL VENT	RPM	REVOLUTIONS PER MINUTE
FOR	FUEL OIL RETURN	RW	RAIN WATER
FOS	FUEL OIL SUPPLY	SF	SQUARE FOOT
FPM	FEET PER MINUTE	S/A	SUPPLY AIR
FS	FLOOR SINK	SAN	SANITARY
FT	FOOT/FEET	SF	SQUARE FOOT
FTR	FIN TUBE RADIATION	SD	SMOKE DAMPER
GAL	GALLON	SM	SURFACE MOUNT
GF	GAS-FIRED	SP	STANDPIPE
GC	GENERAL CONTRACTOR	SP	STATIC PRESSURE
GPM	GALLONS PER MINUTE	STM	STEAM
GW	GREASE WASTE	T	THERMOSTAT
HB	HOSE BIB	TD	TEMPERATURE DROP
HP	HORSE POWER	TDR	TRENCH DRAIN
HTG	HEATING	TEMP	TEMPERATURE
HTR	HEATER	TYP	TYPICAL
HW	HOT WATER	UG	UNDERGROUND
HYD	HYDRANT	VAC	VACUUM
ID	INDIRECT	V	VENT
IN	INCH	VAV	VARIABLE AIR VOLUME
INV	INVERT	VENT	VENTILATION
LB	POUND	VTR	VENT THROUGH ROOF
LB/HR	POUNDS PER HOUR	W	WASTE
LAT	LEAVING AIR TEMPERATURE	WB	WET BULB
LP	LOW PRESSURE	WCO	WALL CLEAN OUT
LPG	LIQUEFIED PETROLEUM GAS	WH	WALL HYDRANT

Equipment Abbreviations

AC	AIR CONDITIONING UNIT	ET	EXPANSION TANK
ACCU	AIR COOLING CONDENSING UNIT	EWH	ELECTRIC WATER HEATER
AHU	AIR HANDLING UNIT	FCU	FAN COIL UNIT
AS	AIR SEPARATOR	FP	FIRE PUMP
B	BOILER	GI	GREASE INTERCEPTOR
CH	CHILLER	GRV	GRAVITY ROOF VENTILATOR
CT	COOLING TOWER	HWP	HEATING WATER PUMP
CUH	CABINET UNIT HEATER	HRU	HEAT RECOVERY UNIT
CHWP	CHILLED WATER PUMP	PRV	POWER ROOF VENTILATOR
DBP	DOMESTIC WATER BOOSTER PUMP	RE	RETURN/EXHAUST FAN
DC	DUCT MOUNTED COIL	RTU	ROOFTOP UNIT
DCP	DOMESTIC WATER CIRCULATING PUMP	SP	SUMP PUMP
EF	EXHAUST FAN	UH	UNIT HEATER
EDC	ELECTRIC DUCT COIL	WH	WATER HEATER

* NOTE *
ALL OF GENERAL NOTES ON THIS SHEET ARE TO BE APPLIED TO ALL OTHER DRAWINGS IN THIS SET.THE SYMBOLS AND ABBREVIATIONS SHOWN ON THIS SHEET MAY OR MAY NOT BE USED IN THIS SET OF DRAWINGS.

HVAC Symbols

24"x12"	Sq. Duct Size (Width x Height)
24"/12"	Oval Duct Size (Width / Height)
18"Ø	Round Duct Size (Diameter)
(E)	Existing Duct To Remain
	Duct To Be Demolished
S/A	Supply Air
V/A	Ventilation Air
O/A	Outdoor Air
R/A	Return Air
T/A	Transfer Air
L/A	Building Relief Air
E/A	General Exhaust Air
KED	Kitchen Exhaust Duct
LH	Laboratory Hood
ETS	Env. Tobacco Smoke
FLUE	Flue Gas Vent
C/A	Combustion Air
	Rect. Supply Duct Rise / Drop
	Round Supply Duct Rise / Drop
	Rect. Return Duct Rise / Drop
	Round Return Duct Rise / Drop
	Rect. Exhaust Duct Rise / Drop
	Round Exhaust Duct Rise / Drop

Grille, Register, Diffusers

Square Ceiling Diffuser: Q 500 / 10"Ø/24x24 / 29 H6/9/17 — Type (See Schedule); Airflow; Neck Size / Module Size; Catalog Throw Performance; Throw Pattern; Max NC Rating

Round Ceiling Diffuser: CD11 100 / 6"Ø / TYP. X 4 — Airflow; Neck Size; Type Count for Space

Sidewall Supply Grille: F 500 / 18"x10" / AFF:9'-0" — Airflow; Nominal Duct Size; Mounting Elevation (Centerline)

Supply: G 200 — Airflow; Neck Size/ Slot(s)/ Active Length

Sidewall Return Grille: T 800 / 16"x0" / AFF:9'-0" — Airflow; Nominal Duct Size; Mounting Elevation (Centerline)

Ceiling Return: S 500 / 12"x0"/24x24 / 25 — Airflow; Neck Size / Module Size; Max NC Rating

Mechanical Equipment

RTU-1	Unit Identity
10.0 ton	Nominal Cooling Capacity
RTU-1 180000 Btu/h	Heating Capacity
180 CFH	Gas Supply Input Rate
ET-1 379 lb	Operating Weight
EF-XX 500 CFM	Design Airflow Rate
VAV 1-2 3.7 GPM	Design Water Flow
AC-1 AFF:7'-0"	Bottom of Equipment Height
(E)AHU-2	Existing to Remain Equipment
(R)AHU-3	Existing Relocated Equipment
	Equipment By Others (Refer To Other Disciplines)

Damper Types

- Manual Damper
- Motorized Damper
- Backdraft Damper
- Smoke Damper
- Fire Damper
- Comb. Fire/ Smoke Damper

Mechanical Piping Symbols

2"	Nominal Pipe Size
	Above Ground Piping
	Below Ground Piping
1/8" / 12" SLOPE	Pipe Slope (When Applicable)
(E)	Existing Pipe To Remain
	Pipe To Be Demolished
CHWR	Chilled-Water Return
CHWS	Chilled-Water Supply
CD	Condensate Drain
CWR	Condenser-Water Return
CWS	Condenser-Water Supply
GWR	Geothermal-Water Return
GWS	Geothermal-Water Supply
HWR	Hot-Water Return
HWS	Hot-Water Supply
G	Natural Gas
LP	Liquid Propane
RL	Refrigerant Liquid
RS	Refrigerant Gas
RD	Refrigerant Discharge
STM	Steam Supply
CDR	Steam Condensate Return
	Pipe Rise / Drop

Valve Types

2" SHUTOFF	Ball Valve
2" BAL	Balancing Valve
2" BFV	Butterfly Valve
2" CHECK	Check Valve
2" CHECK	Alternate Check Valve
3" CIRC	Circuit Setter
2" GATE	Gate Valve
2" GLOBE	Globe Valve
2" LOCK	Locked Shield Valve
2" PRV	Pressure Reducing Valve
2" QUICK	Quick Opening Valve
2" STRAIN	Fluid Strainer
2" M-CNTRL	Elec. Control Valve
4" 3-WAY CNTRL	3-Way Elec. Valve
1" GAS-CNTRL	Emergency Gas Shutoff
1" PLUG	Plug Valve
1" GAS COCK	Gas Shutoff Cock
1" REG	Gas Regulator

Mechanical Devices

AHU-1	Unit Identity
TS	Temperature Sensor
TH	Temp/ Humidity Sensor
TC	Temp/ CO2 Sensor
T	Thermostat
H	Humidistat
HS	Humidity Sensor
CO2	Carbon Dioxide Detector
CO	Carbon Monoxide Detector
H2	Hydrogen Gas Detector
HZG	Hazardous Gas Detector
NO2	Nitrogen Dioxide Detector
O2	Oxygen Gas Detector

Project Requirements

A COORDINATE INSTALLATION OF PIPING, DUCTWORK, CONDUIT, LIGHTS, CABLE TRAY, STRUCTURE, AND EQUIPMENT TO PREVENT CONFLICTS.
B FINAL PRODUCT SHALL BE A COMPLETE AND FUNCTIONING SYSTEM, AND SHALL CONFORM TO ALL REQUIREMENTS OF APPLICABLE FEDERAL, STATE, AND LOCAL CODES, INCLUDING BUT NOT LIMITED TO THE INTERNATIONAL BUILDING CODE AND INTERNATIONAL MECHANICAL CODE.
C LOCATE EQUIPMENT REQUIRING ACCESS 2'-0" MAXIMUM ABOVE CEILING.
D PENETRATIONS OF RATED ASSEMBLIES SHALL BE FIRE STOPPED. FIRE STOPPING SHALL BE AN APPROVED MATERIAL AS PRESCRIBED IN CSFM STANDARD 43-1 AND SHALL BE U.L. LISTED.
E PROVIDE SLEEVES AND/OR OPENINGS TO RUN PIPES THROUGH FOUNDATIONS, FLOORS, WALLS, AND ROOF.
F MAINTAIN CLEAR ACCESS TO SERVICE EQUIPMENT AND OTHER ACCESSORIES REQUIRING SERVICE, VISUAL INSPECTION OR HAND OPERATION. WHERE INDICATED OR REQUIRED, PROVIDE ACCESS PANELS OF THE TYPE SELECTED TO SUIT MATERIALS IN WHICH INSTALLED.
G REFER TO HVAC SERIES DRAWINGS FOR GAS AND A.C. CONDENSATE DRAIN PIPING.
H PIPE SIZES SHOWN SHALL BE CONTINUED IN THE DIRECTION OF FLOW UNTIL ANOTHER SIZE IS SHOWN.
I FOR DETAILS, EQUIPMENT CONNECTIONS, AND PIPE SIZES NOT SHOWN ON THE SEGMENTS, REFER TO DETAILS, SCHEDULES, AND SPECIFICATIONS.
J INSTALL ALL EQUIPMENT IN ACCORDANCE WITH THE RESPECTIVE MANUFACTURER'S WRITTEN INSTALLATION INSTRUCTIONS, AT A LEVEL OF QUALITY AND WORKMANSHIP CONSISTENT WITH THE SPECIFICATIONS.
K LOCATIONS OF PIPING AND EQUIPMENT AS INDICATED ON THE DRAWING, ARE APPROXIMATE AND SUBJECT TO MINOR ADJUSTMENTS IN THE FIELD. WORK SHALL BE COORDINATED WITH ALL OTHER TRADES TO AVOID INTERFERENCE IN THE FIELD.
L INSTALL EXPOSED PIPING AS HIGH AS PRACTICAL IN ROOMS WITHOUT CEILINGS.
M THE CONTRACTOR'S WORK SCHEDULE SHALL BE SUBMITTED TO AND APPROVED BY THE OWNER.
N PRIOR TO STARTING WORK, SUBMIT SHOP DRAWINGS FOR ALL PLUMBING FIXTURES,
O CONTRACTOR SHALL OBTAIN AND PAY FOR ALL NECESSARY PERMITS AND SHALL ARRANGE FOR ALL INSPECTIONS AS REQUIRED.
P PROVIDE ONE YEAR WARRANTY FOR ALL WORKMANSHIP AND MATERIALS AFTER THE DATE OF FINAL ACCEPTANCE.

MECHANICAL GENERAL NOTES:

1. THE CONTRACTOR SHALL COORDINATE WORK WITH THAT OF THE OTHER TRADES PRIOR TO INSTALLATION OF ANY DUCTWORK AND EQUIPMENT.

2. THE CONTRACTOR SHALL MAKE A COMPLETE REVIEW OF THE MECHANICAL PLANS, SCHEDULES, AND DETAILS PRIOR TO INSTALLATION OF THE MECHANICAL SYSTEMS AND REVIEW ANY CONFLICTS THAT ARE NOTED WITH THE ENGINEER.

3. THE MECHANICAL CONTRACTOR SHALL ENSURE THAT ITEMS TO BE FURNISHED UNDER THE CONTRACT WILL FIT THE SPACE AVAILABLE. THE CONTRACTOR SHALL MAKE NECESSARY FIELD MEASUREMENTS TO ASCERTAIN SPACE REQUIREMENTS, INCLUDING THOSE FOR CONNECTIONS, AND SHALL FURNISH AND INSTALL SUCH SIZES AND SHAPES OF EQUIPMENT AS NECESSARY.

4. ALL EQUIPMENT SHALL BE LOCATED AND INSTALLED TO PROVIDE MAXIMUM SPACE FOR PROPER MAINTENANCE AND SERVICE.

5. ALL POWER WIRING AND ASSOCIATED CONDUIT SHALL BE PROVIDED TO HVAC EQUIPMENT BY THE ELECTRICAL CONTRACTOR. THE HVAC CONTRACTOR SHALL FURNISH ALL MOTOR STARTERS, DISCONNECT SWITCHES, AND COMBINATION STARTERS FOR HVAC EQUIPMENT AND TURN THEM OVER TO THE ELECTRICAL CONTRACTOR FOR INSTALLATION. ALL FINAL POWER WIRING CONNECTIONS TO HVAC EQUIPMENT SHALL BE MADE BY THE HVAC CONTRACTOR FROM SLACK WIRE LEFT BY THE ELECTRICAL CONTRACTOR. REFER TO STANDARD ELECTRICAL CONNECTION DETAIL FOR DIVISION RESPONSIBILITY REGARDING ELECTRICAL REQUIREMENTS. MECHANICAL CONTRACTOR SHALL PROVIDE ALL CONTROL WIRING, IN CONDUIT, REQUIRED TO SATISFACTORILY CONTROL ALL EQUIPMENT INCLUDED IN THIS SECTION. FURNISH AND WIRE ALL CONTROL DEVICES SUCH AS THERMOSTATS, SWITCHES, RELAYS AND ANY OTHER DEVICES NECESSARY TO CONTROL THE EQUIPMENT FURNISHED IN THIS SECTION UNLESS NOTED OTHERWISE.
6. THE MECHANICAL CONTRACTOR SHALL PROVIDE AND INSTALL HIS OWN SUPPORT DEVICES. ALL LOCATIONS SHALL BE COORDINATED WITH THE GENERAL CONTRACTOR AND OTHER PRIME CONTRACTORS PRIOR TO INSTALLATION.

7. THE MECHANICAL CONTRACTOR SHALL REFER TO THE ARCHITECTURAL PLANS FOR FLOOR PLAN DIMENSIONS. DO NOT SCALE THESE DRAWINGS.

8. THE MECHANICAL CONTRACTOR SHALL BE RESPONSIBLE FOR ALL PENETRATIONS (PERTAINING TO HVAC WORK) THROUGH THE ROOF. THE MECHANICAL CONTRACTOR SHALL COORDINATE WITH THE ROOFING CONTRACTOR FOR WATER PROOFING AROUND THESE OPENINGS. ROOF CURBS FOR HVAC EQUIPMENT SHALL BE FURNISHED BY THE MECHANICAL CONTRACTOR AND INSTALLED BY THE ROOFING CONTRACTOR.
9. THE MECHANICAL CONTRACTOR SHALL COORDINATE SIZE AND LOCATION OF ALL PENETRATIONS THROUGH THE ROOF WITH THE GENERAL CONTRACTOR AND ROOFING SUB-CONTRACTOR.

10. ALL FIRE WALL DUCT PENETRATIONS SHALL BE FIRE SEALED IN ACCORDANCE WITH THE LATEST UL STANDARDS.

11. PROVIDE SHEET METAL COLLARS AT ALL LOCATIONS WHERE CUTS PENETRATE WALLS. COLLARS SHALL BE 14 GAUGE MINIMUM OR EQUIVALENT TO THE DUCTWORK IF DUCTWORK IS OF A HEAVIER GAUGE METAL.

12. INSTALL BALANCING DAMPERS IN ALL DUCTS SO AS THE LOCATION IS VISIBLE FROM THE FLOOR.
13. ALL ELBOWS IN DUCTWORK SHALL BE RADIUS ELBOWS, UNLESS OTHERWISE NOTED.

14. INSTALL TEMPERATURE SENSORS AND THERMOSTATS 48" ABOVE FINISHED FLOOR. COORDINATE WITH INSTALLATION OF LIGHT SWITCHES.

15. ALL DUCTWORK, PIPING, AND EQUIPMENT LAYOUTS AND LOCATIONS SHOWN ARE DIAGRAMMATIC. THE CONTRACTOR SHALL BECOME FAMILIAR WITH THE PROJECT AND COORDINATE THE DUCT LAYOUT WITH ALL CONTRACTORS PRIOR TO INSTALLATION. THIS CONTRACTOR SHALL PROVIDE, AT NO ADDITIONAL COST TO THE OWNER, ALL DUCT OFFSETS REQUIRED FOR THE SYSTEMS TO FIT THE SPACE PROVIDED WHETHER OR NOT THOSE OFFSETS ARE INDICATED ON THE PLANS.

16. ALL DUCTWORK AND EQUIPMENT SHALL BE SUPPORTED FROM THE BUILDING SUPPORT STRUCTURE AND NOT STRUCTURAL BRIDGING OR THE ROOF DECK. THE MECHANICAL CONTRACTOR SHALL COORDINATE THE ROUGH-IN OF DUCTWORK WITH THE GENERAL CONTRACTOR. ALL DUCT PENETRATIONS SHALL BE PROVIDED BY THE MECHANICAL CONTRACTOR.

17. ALL HYDRONIC PIPING SHALL BE PERMANENTLY IDENTIFIED BY THEIR CONTENT, FUNCTION, AND DIRECTION OF FLOW. ALL IDENTIFICATION MARKERS SHALL BE PERMANENTLY STENCILED ON THE PIPING IN A LEGIBLE MANNER AT NO GREATER DISTANCE THAN 10'-0" ON CENTER. ALL PIPING IN THE MECHANICAL ROOMS AND FINISHED AREAS ARE TO BE PAINTED AS FOLLOWS: CHILLED WATER- BLUE, HOT HEATING WATER- RED, DHW MAKEUP- GREEN.

18. A MANUAL AIR VENT SHALL BE INSTALLED AT EVERY HIGH POINT OF THE ENTIRE HYDRONIC PIPING SYSTEM.

19. DO NOT INSTALL HYDRONIC PIPING OR DUCTWORK OVER AND ELECTRICAL SWITCHGEAR OR PANEL BOARDS.

20. THE MECHANICAL CONTRACTOR SHALL PROVIDE ALL ACCESS DOORS AS REQUIRED FOR CODE COMPLIANCE AND TO ACCESS ANY INSTALLATION OF HIS WORK THAT WILL REQUIRE FUTURE MAINTENANCE. THESE DOORS SHALL BE 20"X20". THE DRYWALL CONTRACTOR WILL PROVIDE THE REQUIRED FRAMED OPENINGS AND INSTALL THE ACCESS DOORS. DOORS SHALL MATCH CEILING RATINGS.

21. FLEXIBLE PIPE CONNECTIONS SHALL BE PROVIDED AT ALL HYDRONIC PIPING CONNECTIONS AT CHILLERS.

22. ALL BELT DRIVEN EQUIPMENT SHALL BE PROVIDED WITH A NEW BELT AT FINAL COMPLETION AND A NEW SPARE BELT SHALL BE TURNED OVER TO MAINTENANCE STAFF.

23. PIPING SHALL BE COLOR CODED AS FOLLOWS WITH FLOW ARROWS AND LABELS AT 10 FOOT INTERVALS AND AT ALL TURNS AND EACH FLOOR AND WALL PENETRATIONS: SEE SPECIFICATIONS FOR COLORS.

24. ALL DETAILS CONTAINED IN SECTION 600 ARE APPLICABLE TO THE INSTALLATION OF THE MECHANICAL SYSTEMS ON THIS PROJECT

25. ALL EXPOSED DOUBLE WALL ROUND DUCTWORK SHALL BE PROVIDED WITH "PAINT GRIP" FINISH. DUCTWORK TO BE PAINTED BY GENERAL CONTRACTOR AS SPECIFIED BY ARCHITECT.

PARK CENTER MECHANICAL SHEET INDEX

PC-M001	COVER SHEET
PC-M101	DUCTWORK PLANS
PC-M201	PIPING PLANS
PC-M401	CONTROLS
PC-M601	DETAILS
PC-M602	DETAILS
PC-M701	SCHEDULES

ENERGY CODE COMPLIANCE STATEMENT PARK CENTER

MECHANICAL SYSTEM, SERVICE SYSTEM, AND EQUIPMENT METHOD OF COMPLIANCE

PRESCRIPTIVE [X] ENERGY COST BUDGET [ ]

THERMAL ZONE: 4A

EXTERIOR DESIGN CONDITIONS:

WINTER DRY BULB: 19.7°F
SUMMER DRY BULB: 95.0°F

INTERIOR DESIGN CONDITIONS:

WINTER DRY BULB: 68°F
SUMMER DRY BULB: 75°F
RELATIVE HUMIDITY: 50%

BUILDING HEATING LOAD: 53.17 MBH

BUILDING COOLING LOAD: 8.25 TONS

MECHANICAL SPACING CONDITIONS SYSTEM:
UNITARY - HEATING AND COOLING PROVIDED BY SPLIT SYSTEM HEAT PUMP UNITS.
BOILER - N/A
CHILLER - N/A

EQUIPMENT EFFICIENCIES:
SEE SCHEDULES

EQUIPMENT SCHEDULES WITH MOTORS:
SEE SCHEDULES

DESIGNER STATEMENT:
TO THE BEST OF MY KNOWLEDGE AND BELIEF, THE DESIGN OF THIS BUILDING COMPLIES WITH THE MECHANICAL SYSTEMS AND EQUIPMENT REQUIREMENTS OF THE CURRENT INTERNATIONAL MECHANICAL CODE
SCOTT L. ENNIS, P.E.

AN ONSITE SYSTEM INSTALLATION COMPLIANCE REVIEW ALL BE CONDUCTED BY A DESIGN PROFESSIONAL PRIOR TO FINAL INSPECTION AND ISSUANCE OF CERTIFICATION OR OCCUPANCY. THE MECHANICAL CONTRACTOR SHALL MAKE APPROPRIATE PERSONNEL. AVAILABLE DURING DESIGN PROFESSIONAL'S ONSITE INSPECTION TO ASSIST WITH REVIEW AND ADDITIONAL EQUIPMENT AND CONTROLS TESTING. CONTRACTOR SHALL SCHEDULE ONSITE INSPECTION WITH DESIGN PROFESSIONAL A MINIMUM ONE WEEK PRIOR TO VISIT. AT THE TIME OF THE VISIT THE MECHANICAL CONTRACTOR SHALL PROVIDE THE FOLLOWING FOR REVIEW BY THE LOCAL AHJ AND DESIGN PROFESSIONAL:

- A COMPLETED TEST AND BALANCE REPORT
- A COPY OF ALL OPERATION AND MAINTENANCE MANUALS
- DOCUMENTATION THAT EQUIPMENT INSTALLER HAS FOLLOWED THE MANUFACTURER'S RECOMMENDATIONS FOR STARTUP AND TESTING OF ALL EQUIPMENT.

Susan Hatchell Landscape Architecture, PLLC
711 W. North Street, Raleigh, NC 27603
p: 919-838-9600 f: 919-838-9700

Wooten
120 North Boylan Avenue • Raleigh, NC 27603-1423
(919) 828-0531 • thewootencompany.com
License Number : F-0115

COVER SHEET

NORTH CAROLINA PROFESSIONAL ENGINEER 027928 SCOTT L. ENNIS
DocuSigned by: 1E0B95366ACF412...
7/24/2026

LAKE MYRA COUNTY PARK
Wake County, NC

REVISIONS

Date: 07/27/26

PC-M001

FIRE RATED WALL LEGEND

2 HR

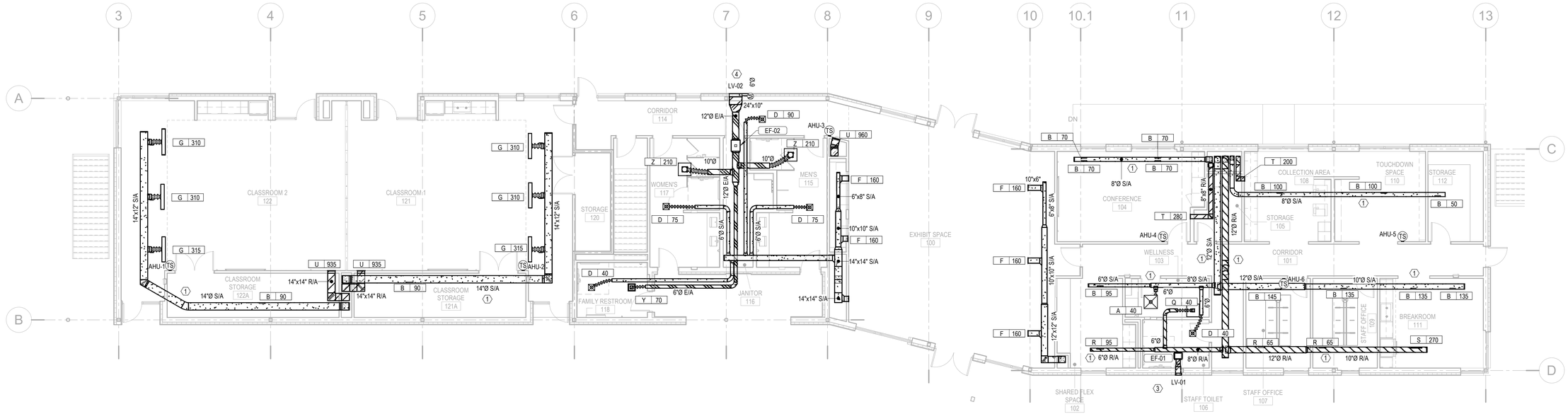

2 PC-M101 FIRST FLOOR HVAC PLAN
1/8" = 1'-0"

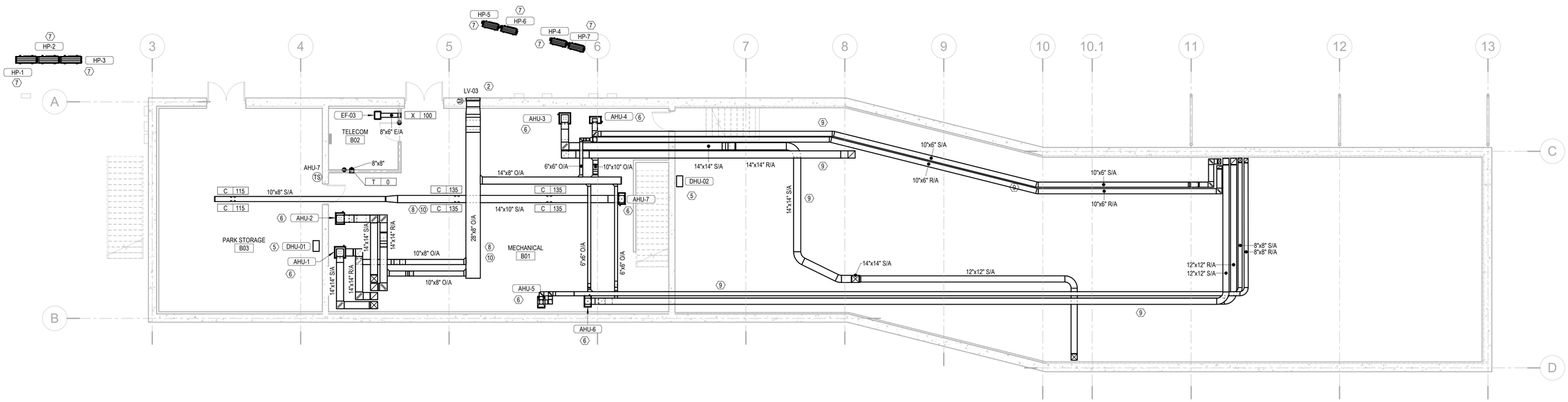

1 PC-M101 BASEMENT/CRAWLSPACE HVAC PLAN
1/8" = 1'-0"

KEY NOTES

1. EXPOSED DUCTWORK SHALL BE ROUND DOUBLE WALLED PER SPECIFICATION.
2. LOUVER TO BE MOUNTED A.F.F. 5'-4" AS MEASURED FROM THE BOTTOM OF THE LOUVER. MAINTAIN 10' BETWEEN OUTSIDE AIR INTAKE ANY ANY EXHAUST DISCHARGE.
3. LOUVER TO BE MOUNTED A.F.F. 10'-1" AS MEASURED FROM THE BOTTOM OF THE LOUVER. MAINTAIN 10' BETWEEN EXHAUST DISCHARGE AND ANY OUTSIDE AIR INTAKE.
4. LOUVER TO BE MOUNTED A.F.F. 10'-2" AS MEASURED FROM THE BOTTOM OF THE LOUVER. MAINTAIN 10' BETWEEN EXHAUST DISCHARGE AND ANY OUTSIDE AIR INTAKE.
5. INSTALL DEHUMIDIFIER PER MANUFACTURER'S INSTALLATION INSTRUCTIONS AND CLEARANCES.
6. INSTALL AIR HANDLING UNIT PER MANUFACTURERS INSTALLATION INSTRUCTIONS AND CLEARANCES. PROVIDE SUPPLY DUCT TRANSITION AS REQUIRED. PROVIDE RETURN PLENUM ON RETURN AIR INLET. CONNECT RETURN DUCTWORK INTO PLENUM.
7. INSTALL HEAT PUMP AT LOCATION INDICATED PER MANUFACTURER'S INSTALLATION INSTRUCTIONS AND CLEARANCES. INSTALL ON CONCRETE HOUSEKEEPING PAD. HEAT PUMP SHALL BE INSTALLED WITH FRONT SIDE OF UNIT IN LINE WITH EDGE OF DECK ABOVE SO THAT CONDENSER DISCHARGE BLOWS OUT FROM UNDER DECK.
8. ROUTE DUCTWORK HIGH THROUGH BASEMENT SPACE. ENSURE MINIMUM 6'-8" CLEAR BELOW ALL DUCTWORK IN BASEMENT AREA.
9. ROUTE DUCTWORK THROUGH CRAWLSPACE TIGHT TO STRUCTURE ABOVE AND TURN UP AS INDICATED.
10. EXPOSED DUCTWORK IN BASEMENT NON-PUBLIC AREAS SHALL BE SINGLE-WALL RECTANGULAR CONSTRUCTION WITH WRAP INSULATION.

Susan Hatchell
Landscape Architecture, PLLC
711 W. North Street, Raleigh, NC 27603
p: 919-838-9600 f: 919-838-9700

Wooten
120 North Boylan Avenue • Raleigh, NC 27603-1423
(919) 828-0531 • thewootencompany.com
License Number: F-0115

DUCTWORK PLANS

NORTH CAROLINA PROFESSIONAL ENGINEER SEAL 027928 SCOTT L. ENNIS
Docusigned by: 1D5B5B9BAC8412...
7/24/2026

LAKE MYRA COUNTY PARK
Wake County, NC

REVISIONS

Date: 07/27/26

PC-M101

FIRE RATED WALL LEGEND

2 HR

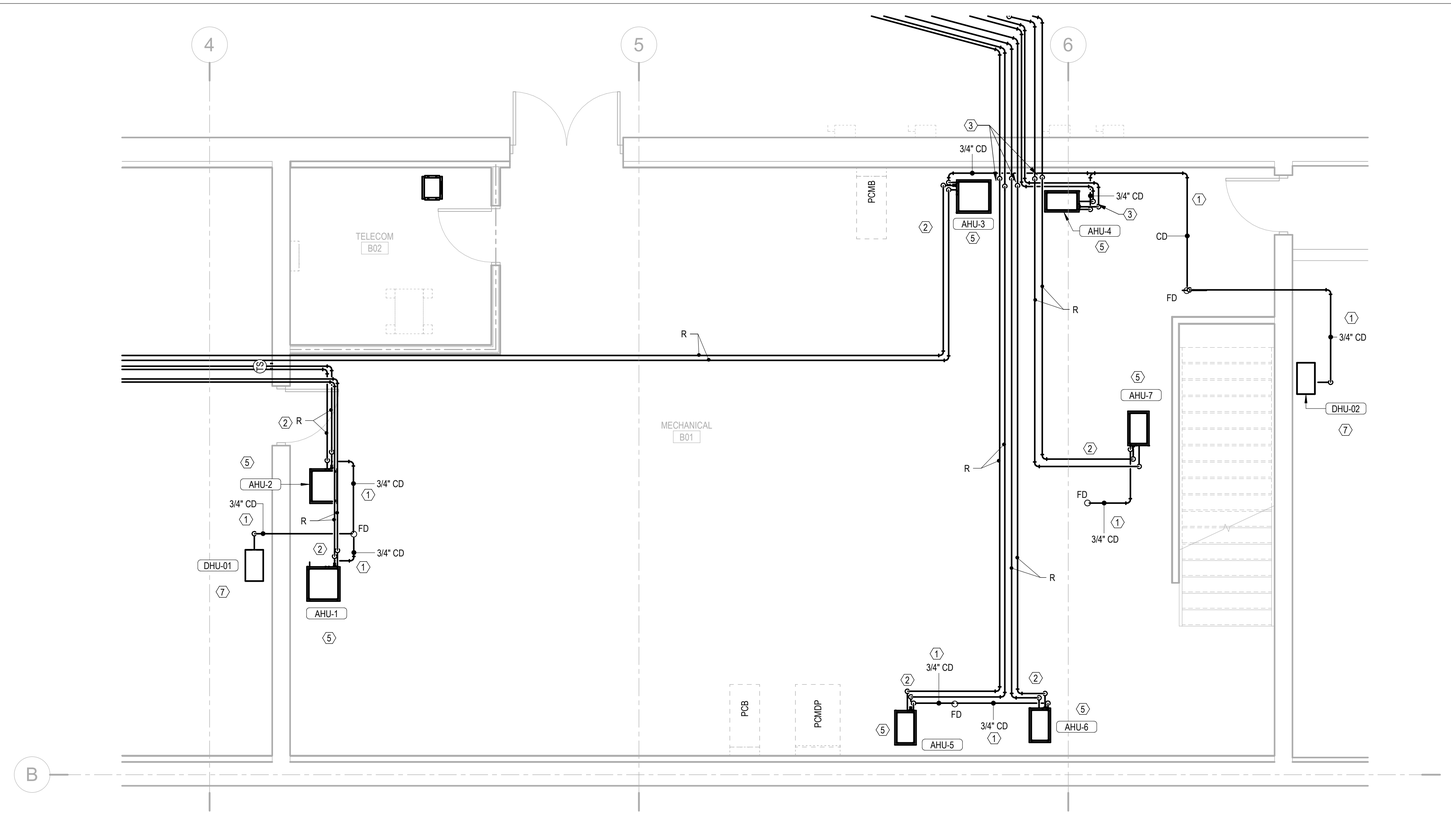

2 PC-M201 BASEMENT/CRAWLSPACE PIPE PLAN - CALLOUT 1
1/4" = 1'-0"

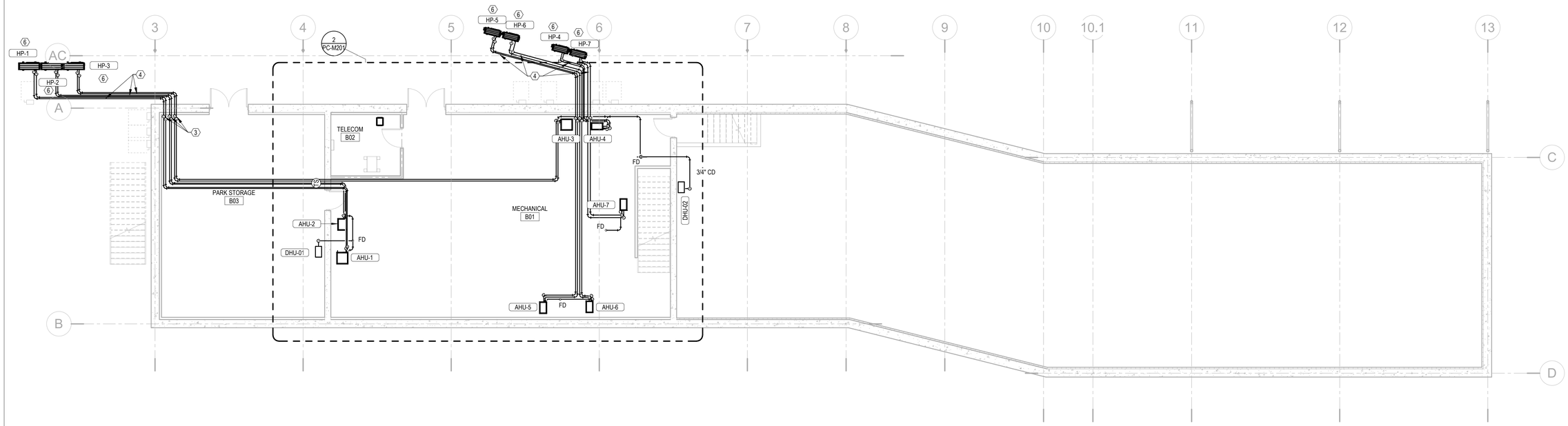

1 PC-M201 BASEMENT/CRAWLSPACE PIPE PLAN
1/8" = 1'-0"

KEY NOTES

1. ALL CONDENSATE DRAINAGE PIPING TO BE ROUTED TO NEAREST FLOOR DRAIN AS INDICATED.
2. ROUTE REFRIGERANT PIPING UP FROM AHU AND HIGH ACROSS CEILING SPACE AS INDICATED.
3. TURN REFRIGERANT PIIPNG DOWN AND EXIT LOW THROUGH EXTERIOR WALL.
4. ROUTE REFRIGERANT PIPING ACROSS GROUND TO HEAT PUMP AS INDICATED.
5. INSTALL AHU PER MANUFACTURER'S INSTALLATION INSTRUCTIONS AND CLEARANCES. PROVIDE REFRIGERANT PIPING FROM HEAT PUMP AT EXTERIOR. PROVIDE CONDENSATE DRAIN PIPING.
6. INSTALL HEAT PUMP ON CONCRETE HOUSEKEEPING PAD PER MANUFACTURER'S INSTALLATION INSTRUCTIONS AND CLEARANCES.
7. INSTALL DEHUMIDIFIER UNIT PER MANUFACTURER'S INSTALLATION INSTRUCTIONS AND CLEARANCES.

Susan Hatchell
Landscape Architecture, PLLC
711 W. North Street, Raleigh, NC 27603
p: 919-838-9600 f: 919-838-9700

Wooten
129 North Boylan Avenue • Raleigh, NC 27603-1423
(919) 828-0531 • thewootencompany.com
License Number : F-0115

PIPING PLANS

NORTH CAROLINA PROFESSIONAL ENGINEER SEAL 027928 SCOTT L. ENNIS
Docusigned by:
Scott L. Ennis
1E9B95366ACF412...
7/24/2026

LAKE MYRA COUNTY PARK
Wake County, NC

REVISIONS

Date: 07/27/26

PC-M201

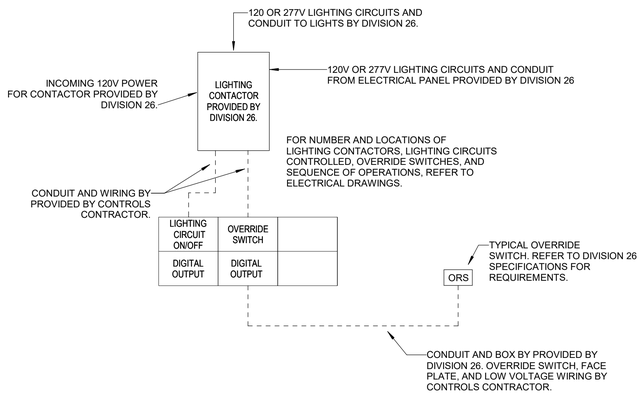

LIGHTING CONTROL SCHEMATIC

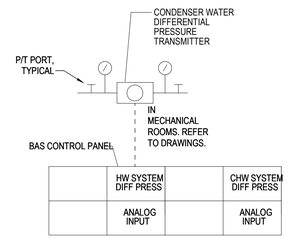

DIFFERENTIAL PRESSURE TRANSMITTERS

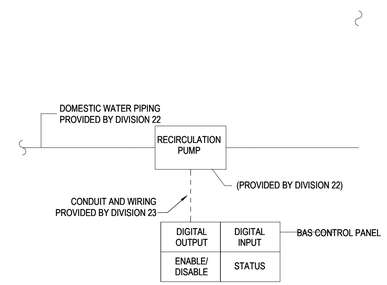

RECIRCULATION PUMP MONITORING

FOUR (4) LOCATIONS. REFER TO PLUMBING DRAWINGS.

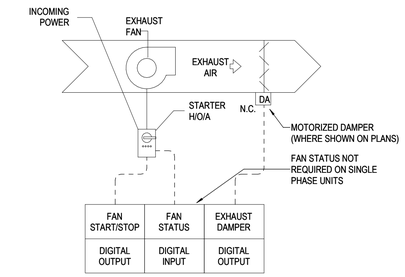

BAS CONTROLLED EXHAUST FAN

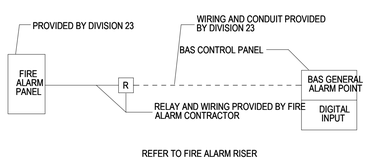

FIRE ALARM

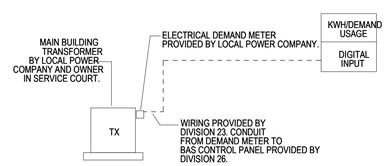

ELECTRIC DEMAND

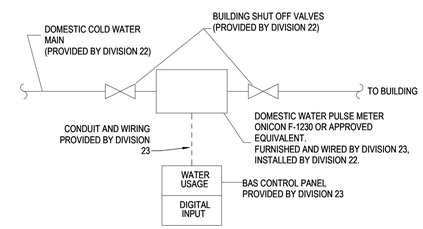

WATER UTILITY MONITORING

NOTES:

1. PULSE METER SHALL BE LOCATED INSIDE MECH ROOM DOWNSTREAM OF RPZ BACKFLOW PREVENTER.
2. PULSE METER SHALL BE FURNISHED BY DIVISION 23 AND INSTALLED BY DIVISION 22.
3. DIVISION 26 SHALL RUN AN EMPTY 1" CONDUIT FROM PULSE METER TO THE BAS. DIVISION 23 SHALL RUN THE WIRING AND MAKE FINAL CONNECTIONS.

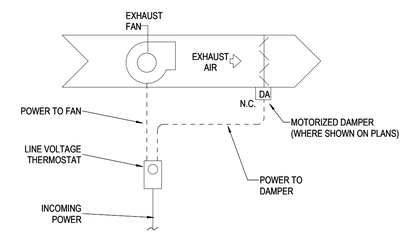

LINE THERMOSTAT CONTROLLED EXHAUST FAN

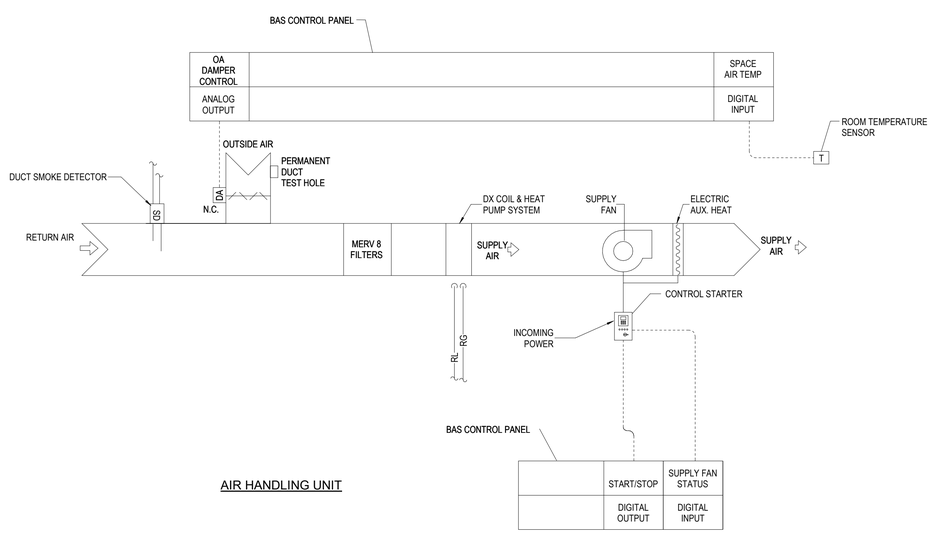

AIR HANDLING UNIT

Susan Hatchell
Landscape Architecture, PLLC
711 W. North Street, Raleigh, NC 27603
p: 919-838-9600 f: 919-838-9700

Wooten
129 North Boylan Avenue • Raleigh, NC 27603-1423
(919) 828-0531 • thewootencompany.com
License Number : F-0115

CONTROLS

NORTH CAROLINA PROFESSIONAL ENGINEER SEAL
Docusigned by:
DocuSigned by: 027928
1E0B95366ACF412...
SCOTT L. ENNIS
7/24/2026

LAKE MYRA COUNTY PARK
Wake County, NC

REVISIONS

Date: 07/27/26

PC-M401

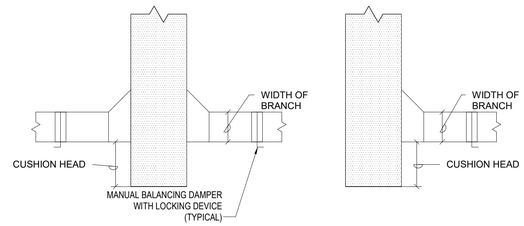

CUSHION HEAD = 1.5 x BRANCH DUCT WIDTH (MAXIMUM LENGTH 2'-0")

1 PC-M601 DETAIL - CUSHION HEAD DETAIL
NOT TO SCALE

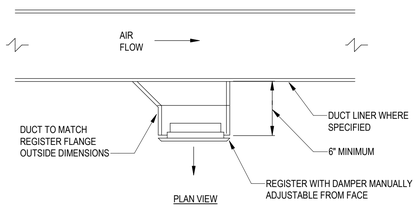

2 PC-M601 DETAIL - DUCT MOUNTED REGISTER (RECTANGULAR DUCT)
NOT TO SCALE

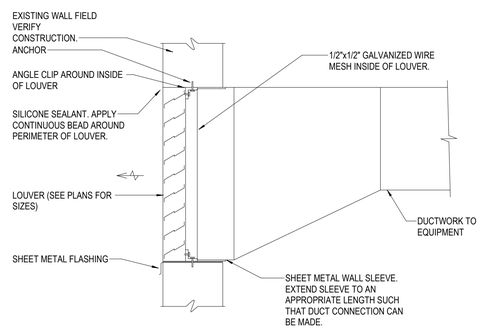

3 PC-M601 DETAIL - LOUVER INSTALLATION
NOT TO SCALE

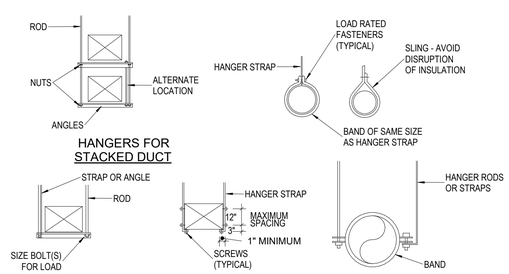

NOTES:

1. REINFORCEMENT MAY BE USED FOR ATTACHMENT IF IT QUALIFIES FOR BOTH DUTIES.
2. DO NOT EXCEED LOAD RATINGS FOR METHOD USED. FROM SMACNA DUCT STANDARDS

4 PC-M601 DETAIL - TYPICAL DUCT HANGERS
NOT TO SCALE

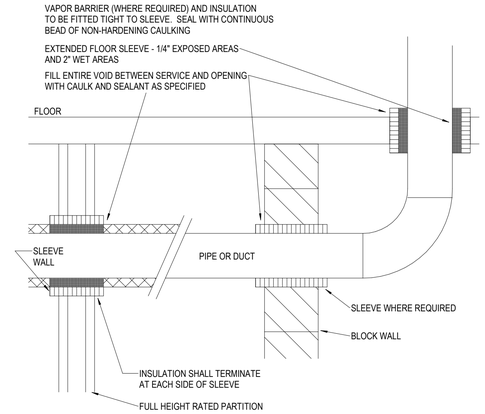

5 PC-M601 DETAIL - DUCT OR PIPE WALL AND FLOOR PENETRATION
NOT TO SCALE

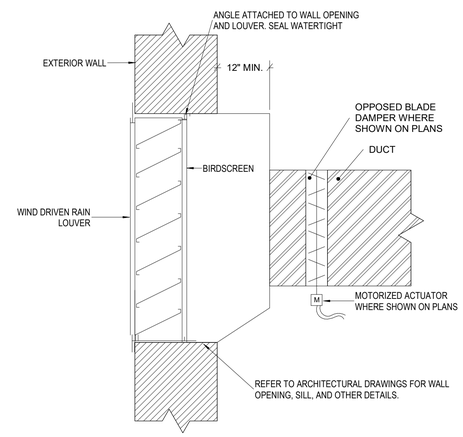

6 PC-M601 DETAIL - OUTSIDE AIR/EXHAUST LOUVER
NOT TO SCALE

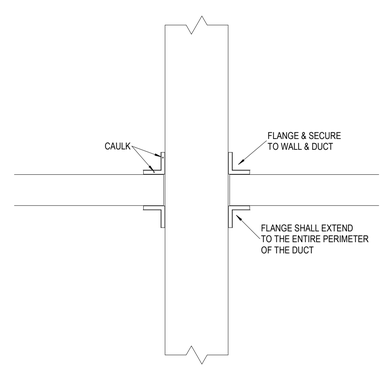

(PLAN VIEW)

7 PC-M601 DETAIL - NON-RATED DUCT PENETRATION
NOT TO SCALE

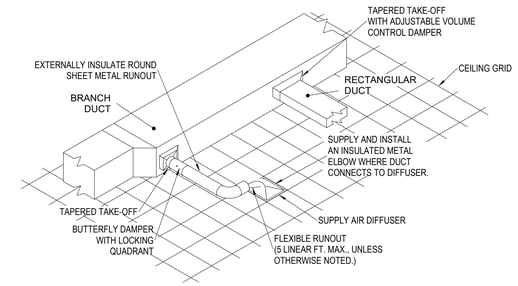

NOTE:

PROVIDE TAPERED TAKE-OFF WITH ADJUSTABLE VOLUME DAMPER, AIR DISTRIBUTING GRID, OR RADIUS TAKE-OFF WITH STRAIGHTENING VANES AT TAKE-OFF.

8 PC-M601 DETAIL - SUPPLY, RETURN & EXHAUST AIR TAKE-OFF
NOT TO SCALE

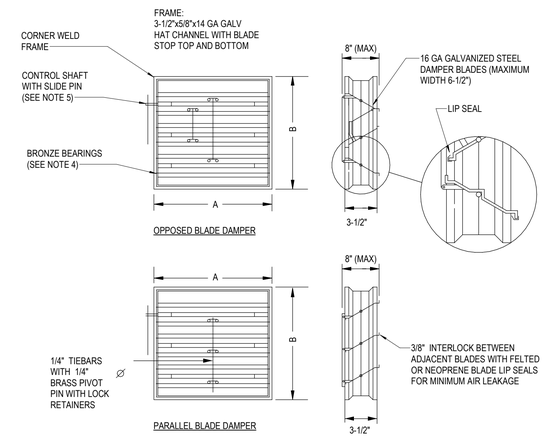

NOTES:

1. MAXIMUM WIDTH, A, 48" PER SECTION
2. MAXIMUM HEIGHT, B, 72" PER SECTION
3. S.S. JAMB TO BLADE WINDSTOP NOT SHOWN
4. SELF LUBRICATING BRONZE BEARINGS WITH 1/2" SLIDE PINS ON END OF BLADES
5. CADMIUM PLATED CONTROL SHAFT 1/2" OR 3/8" SQUARE EXTENDED 6" BEYOND FRAME WITH SLIDE PIN CONTROL
6. PROVIDE OPPOSED BLADE DAMPERS FOR ALL AIR HANDLING UNIT OUTSIDE AIR, RELIEF AIR, AND RETURN DAMPERS.

9 PC-M601 DETAIL - LOW LEAKAGE RECTANGULAR DAMPERS
NOT TO SCALE

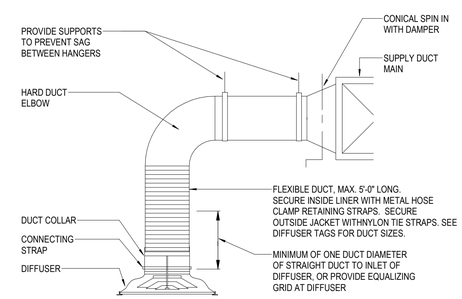

10 PC-M601 DETAIL - DIFFUSER FLEXIBLE DUCT CONNECTION
NOT TO SCALE

Susan Hatchell
Landscape Architecture, PLLC
711 W. North Street, Raleigh, NC 27603
p: 919-838-9600 f: 919-838-9700

Wooten
120 North Boylan Avenue • Raleigh, NC 27603-1423
(919) 828-0531 • thewootencompany.com
License Number : F-0115

DETAILS

NORTH CAROLINA PROFESSIONAL ENGINEER SEAL 027928 SCOTT L. ENNIS
DocuSigned by: 1E0B9936BACF412...
7/24/2026

LAKE MYRA COUNTY PARK
Wake County, NC

REVISIONS

Date: 07/27/26

PC-M601

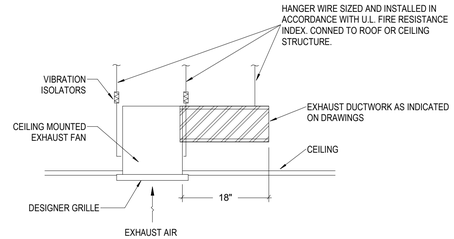

1 PC-M602 DETAIL - CEILING MOUNTED EXHAUST FAN
NOT TO SCALE

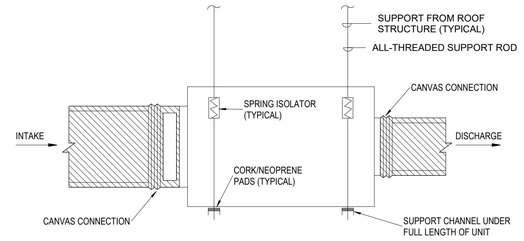

NOTE:

WRAP FAN WITH 2" 1-1/2 LB DENSITY FIBERGLASS INSULATION FOR SOUND CONTROL. LEAVE DISCONNECT AND SERVICE PANEL UNCOVERED.

5 PC-M602 DETAIL - IN-LINE FAN SUPPORT
NOT TO SCALE

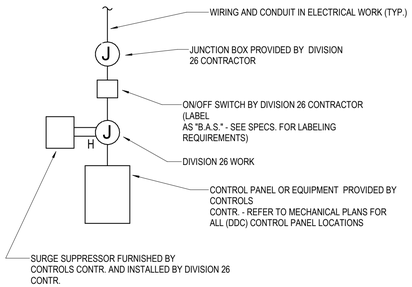

8 PC-M602 TYPICAL BAS CONNECTIONS
NOT TO SCALE

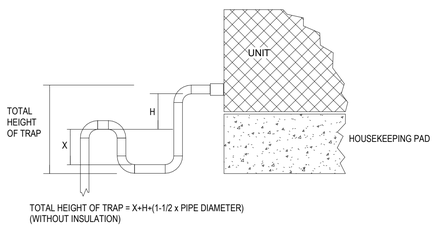

BLOW THROUGH	DRAW THROUGH
X = MIN. 1" PLUS CASING STATIC PRESSURE	X = 1/2 "H"
H = MIN. 1"	H = MIN. 1" PLUS CASING STATIC PRESSURE

2 PC-M602 DETAIL - COIL DRAIN PIPING
NOT TO SCALE

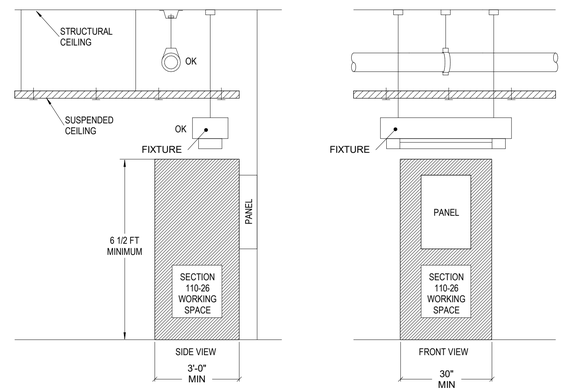

N.E.C ARTICLE 110-26

6 PC-M602 DETAIL - WORKING CLEARANCE FOR ELECTRICAL EQUIPMENT
NOT TO SCALE

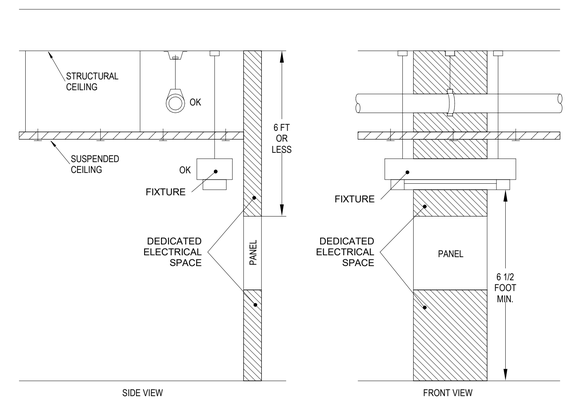

N.E.C ARTICLE 110-26(F)(1)

9 PC-M602 DETAIL - DEDICATED SPACE FOR ELECTRICAL EQUIPMENT
NOT TO SCALE

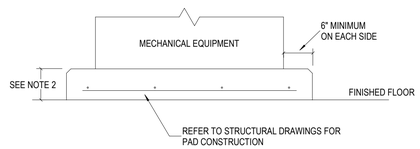

NOTES:

1. ACTUAL PAD SIZE TO BE DETERMINED BY CONTRACTOR, AFTER ALL EQUIPMENT HAS BEEN REVIEWED.
2. PAD SHALL BE 6" HIGH FOR BOILERS AND 4" HIGH FOR ALL AHU'S AND OTHER MECHANICAL EQUIPMENT.

3 PC-M602 DETAIL - MECHANICAL EQUIPMENT SUPPORT PAD
NOT TO SCALE

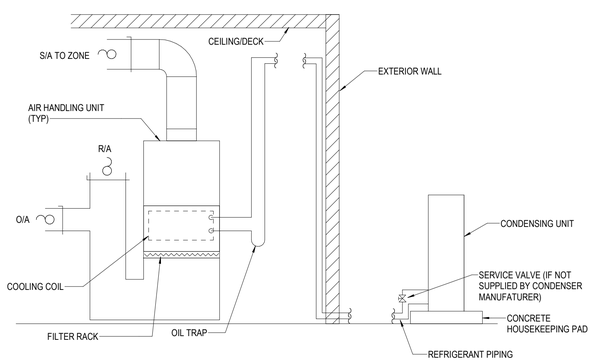

4 PC-M602 DETAIL - SPLIT SYSTEM INSTALLATION W/ VERTICAL AHU
NOT TO SCALE

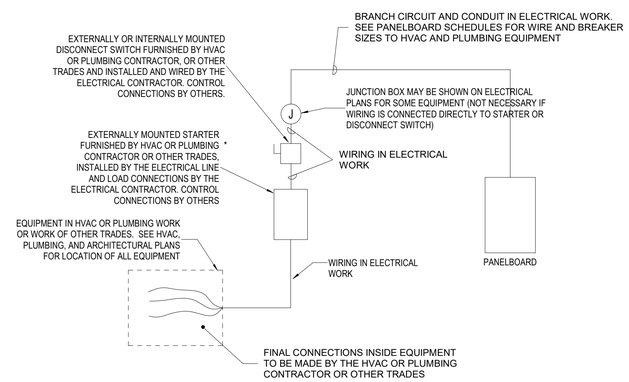

* A COMBINATION STARTER SHALL BE USED IN LIEU OF A SEPARATE DISCONNECT SWITCH AND STARTER, WHERE AVAILABLE.

LEGEND

SYMBOL	DESCRIPTION
AI	ANALOG INPUT
DI	DIGITAL INPUT
AO	ANALOG OUTPUT
DO	DIGITAL OUTPUT
FS	FLOW SWITCH
F	FREEZESTAT
T	THERMOMETER
FA	FIRE ALARM
M	ACTUATOR FOR VALVE/DAMPER
C	CARBON DIOXIDE SENSOR
H	HUMIDITY SENSOR
S	DUCT SMOKE DETECTOR

GENERAL NOTES:

1. CONTROLS FOR EACH AHU SHALL BE INSTALLED IN A LOCAL NEMA I CONTROL PANEL. PREWIRED CONTROL PANEL SHALL BE A UL LABELED ASSEMBLY AS REQUIRED BY NC BUILDING CODE.
2. ALL DUCT SMOKE DETECTORS ARE PROVIDED BY THE ELECTRICAL CONTRACTOR.
3. ALL MODULATING ACTUATORS SHALL BE TRULY PROPORTIONAL, NO PULSED POSITIONING OF ACTUATORS IS ALLOWED.

7 PC-M602 DETAIL - TYPICAL EQUIPMENT CONNECTIONS
NOT TO SCALE

Susan Hatchell
Landscape Architecture, PLLC
711 W. North Street, Raleigh, NC 27603
p: 919-838-9600 f: 919-838-9700

Wooten
120 North Boylan Avenue • Raleigh, NC 27603-1423
(919) 828-0531 • thewootencompany.com
License Number : F-0115

DETAILS

NORTH CAROLINA PROFESSIONAL ENGINEER SEAL 027928 SCOTT L. ENNIS
DocuSigned by: 18DB95366ACF412...
7/24/2026

LAKE MYRA COUNTY PARK
Wake County, NC

REVISIONS

Date: 07/27/26

PC-M602

Park Center Split System Outdoor Unit Schedule

Mark	Manufacturer	Model	Nominal Capacity (Tons)	Total Cooling (MBH)	Total Heating (MBH)	SEER2	HSPF2	Refrigerant Type	Refrigerant Charge (lbs)	MCA	MOCP	Electrical V/Ph	Weight (Lbs)	Remarks
HP-1	Mitsubishi	PUZ-AK36NLHZ-U1	3.0	37.0	40.0	19.5	9.2	R-454B	9.9	34.0 A	56 A	208/1	224	
HP-2	Mitsubishi	PUZ-AK30NLHZ-U1	2.5	30.6	34.4	18.0	8.5	R-454B	7.7	22.0 A	37 A	208/1	155	
HP-3	Mitsubishi	PUZ-AK42NLHZ-U1	3.5	44.0	49.7	19.1	9.4	R-454B	9.9	34.0 A	56 A	208/1	224	
HP-4	Mitsubishi	PUZ-AK12NL-U1	1.0	12.4	19.0	20.0	9.8	R-454B	4.4	16.0 A	27 A	208/1	99	
HP-5	Mitsubishi	PUZ-AK12NL-U1	1.0	12.4	19.0	20.0	9.8	R-454B	4.4	16.0 A	27 A	208/1	99	
HP-6	Mitsubishi	PUZ-AK18NL-U1	1.5	18.3	24.0	18.6	8.6	R-454B	4.4	16.0 A	27 A	208/1	99	
HP-7	Mitsubishi	PUZ-AK12NL-U1	1.0	12.4	19.0	20.0	9.8	R-454B	4.4	16.0 A	27 A	208/1	99	

GENERAL NOTES:
1. PROVIDE NEOPRENE VIBRATION ISOLATION PADS AND CONCRETE HOUSEKEEPING PAD.
2. PERFORMANCE BASED AT EAT 80 DB, 67 WB. AMBIENT 95 DB, 75 WB.
3. PROVIDE HAIL GUARDS FOR CONDENSER COILS.
4. REFRIGERANT LINE SIZES AS RECOMMENDED BY THE EQUIPMENT MANUFACTURER BASED ON HORIZONTAL AND VERTICAL RUNS.
5. UNIT RATINGS AT EAT 80 DB, 67 WB. AMBIENT 95 DB, 75 WB.

Park Center Split System Indoor Unit Schedule

Mark	Manufacturer	Model	Nominal Capacity (Tons)	Supply Airflow CFM	OA CFM	ESP (in. wg)	Aux Heat KW	Aux Heat MCA	Aux Heat MOCP	AHU MCA	Electrical V/Ph	Weight (Lbs)	Remarks
AHU-1	Mitsubishi Electric	PVA-AA36NL	3.0	950	355	0.5	6.0	36.1 A	40 A	5.5 A	208/1	172	1, 2, 3, 4
AHU-2	Mitsubishi Electric	PVA-AA30NL	2.5	920	360	0.21	6.0	36.1 A	40 A	4.13 A	208/1	141	1, 2, 3, 4
AHU-3	Mitsubishi Electric	PVA-AA42NL	3.5	1200	350	0.6	7.5	45.1 A	50 A	5.63 A	208/1	172	1, 2, 3, 4
AHU-4	Mitsubishi Electric	PVA-AA12NL	1.0	250	40	0.26	3.8	22.6 A	25 A	3.0 A	208/1	113	1, 2, 3, 4
AHU-5	Mitsubishi Electric	PVA-AA12NL	1.0	250	80	0.47	3.8	22.6 A	25 A	3.0 A	208/1	113	1, 2, 3, 4
AHU-6	Mitsubishi Electric	PVA-AA18NL	1.5	520	130	0.31	3.8	22.6 A	25 A	3.0 A	208/1	113	1, 2, 3, 4
AHU-7	Mitsubishi Electric	PVA-AA12NL	1.0	250	10	0.5	3.8	22.6 A	25 A	3.0 A	208/1	113	1, 2, 3, 4

GENERAL NOTES:

A. MAXIMUM COIL FACE VELOCITY OF 500 FPM. MAXIMUM FILTER FACE VELOCITY OF 300 FPM.
B. PROVIDE WITH A DOUBLE SLOPED STAINLESS STEEL DRAIN PAN UNDER ALL COIL SECTIONS. EXTEND PIPING TO FLOOR DRAIN.
C. ALL FANS SHALL BE INTERNALLY ISOLATED.
D. ALL UNITS SHALL HAVE AN FILTER SECTION WITH 2", MERV-8 FILTERS. PROVIDE ONE SET IN THE UNIT AND THREE EXTRA SETS. ONE EXTRA SET SHALL BE INSTALLED AFTER THE SYSTEM IS BALANCED AND THE BUILDING IS CLEAN. TWO FINAL SETS ARE FOR FUTURE, TURN OVER TO OWNER.
E. ALL AIR HANDLERS SHALL BE U.L. LISTED.
F. PROVIDE UNIT WITH WALL MOUNTED THERMOSTAT. INTEGRATE EACH UNIT WITH THE BAS AND CONFIRM PROPER CONTROL OPERATION.

REMARKS:

1. PROVIDE UNIT WITH AUXILIARY ELECTRIC HEAT ACCESSORY KIT.
2. AIR HANDLING UNIT SHALL BE POWERED SEPARATELY FROM OUTDOOR UNIT. PROVIDE SEPARATE POWER KIT SPTB1.
3. HEATER SHALL BE POWERED SEPARATELY FROM AIR HANDLING UNIT.
4. PROVIDE AUXILIARY HEAT LOCKOUT ACCESSORY TO PREVENT ELECTRIC HEAT FROM OPERATING ABOVE PROGRAMMED SET OUTSIDE TEMPERATURE.

Dehumidifier Schedule

TAG	MANUFACTURER	MODEL	INSTALLATION TYPE	FAN AIRFLOW	HUMIDITY		GALLONS (PER DAY)	EFFICIENCY (PINTS/ KWH)	REFRIGERANT TYPE	ELECTRICAL		WEIGHT	REMARKS
					SETPOINT (F)	RH				V	PH		
DHU-01	SANTA FE	COMPACT70	BASE SUPPORT	150 CFM	80 °F	60%	8.75	5.5	R-454B	115 V	1	55 lb	1
DHU-02	SANTA FE	COMPACT70	BASE SUPPORT	150 CFM	80 °F	60%	8.75	5.5	R-454B	115 V	1	55 lb	1

GENERAL NOTES:

A. PROVIDE FACTORY-ASSEMBLED MECHANICAL DEHUMIDIFIER SIZED TO MAINTAIN DESIGN INDOOR RELATIVE HUMIDITY AS INDICATED.
B. UNIT SHALL BE LISTED AND LABELED AND SHALL COMPLY WITH ALL APPLICABLE CODES.
C. INSTALL IN ACCORDANCE WITH MANUFACTURER'S INSTRUCTIONS AND PROVIDE REQUIRED SERVICE CLEARANCES.
D. PROVIDE INTEGRAL OR REMOTE HUMIDISTAT FOR CONTROL. SETPOINT TO BE COORDINATED WITH ENGINEER.
E. PROVIDE CONDENSATE DRAIN WITH TRAP AND DISCHARGE TO APPROVED LOCATION.
F. PROVIDE ELECTRICAL POWER AND DISCONNECT AS REQUIRED. COORDINATE WITH DIVISION 26.

REMARKS

1. PROVIDE CONDENSATE PUMP. BASIS OF DESIGN SHALL BE LITTLE GIANT CONDENSATE PUMP, MODEL VCL-24UL. APPROVED EQUIVALENT MANUFACTURERS AND MODELS ARE ACCEPTABLE.

Park Center Fan Schedule

Identity	Location	Manufacturer	Model	Product Type	Fan Design				Fan Arrangement	Fan Drive Type	Weight	Electrical		Remarks
	Name				Capacity	TSP	bhp	RPM				Voltage	Phase	
EF-01	STAFF TOILET	GREENHECK	SP-A125	Square Centrifugal	70 CFM	0.25 in-wg	0.01 hp	900	Ceiling Mount	Direct	17 lb	115 V	1	1, 2
EF-02	JANITOR	Greenheck	CSP-A510-VG	Square Centrifugal	490 CFM	0.25 in-wg	0.15 hp	1189	Inline	Direct	36 lb	115 V	1	1, 2
EF-03	TELECOM	GREENHECK	SP-A125	Square Centrifugal	100 CFM	0.25 in-wg	0.01 hp	1058	Ceiling Mount	Direct	17 lb	115 V	1	1, 2

GENERAL NOTES:

A. PROVIDE ALL DUCT TRANSITIONS FOR FANS.
B. THE UNIT HOUSING SHALL BE CONSTRUCTED OF ALUMINUM.
C. ALL FANS TO BE U.L. LISTED.
D. PROVIDE WITH INTEGRAL DISCONNECT.
E. EXTERNALLY OR INTERNALLY MOUNTED DISCONNECT SWITCH FURNISHED BY DIVISION 23 AND INSTALLED BY DIVISION 26.
F. EXTERNALLY MOUNTED STARTER FURNISHED BY DIVISION 23 INSTALLED BY DIVISION 26.
G. PROVIDE 24V MOTORIZED DAMPER(S) UNLESS OTHERWISE DIRECTED.
H. PROVIDE OVERLOAD PROTECTION FOR ALL FANS, COORDINATE WITH DIVISION 26.
I. PROVIDE SPEED CONTROLLERS FOR ALL DIRECT DRIVE FANS.
J. ESP DOES NOT INCLUDE FACTORY BACKDRAFT DAMPER. THIS PRESSURE DROP SHALL BE ADDED BY THE MANUFACTURER TO THE ESP LISTED WHEN SELECTING FANS.

REMARKS:

1. PROVIDE HANGING VIBRATION ISOLATION KIT WITH NEOPRENE ISOLATORS.
2. PROVIDE DISCONNECT SWITCH, NEMA-1 INDOORS, NEMA 3R OUTDOORS, TOGGLE, MOUNTED AND WIRED.
3. SPARK-A RESISTANT CONSTRUCTION.
4. PROVIDE DISCONNECT SWITCH, OSHA MOTOR SIDE GUARD, WALL HOUSING, AND CAST ALUMINUM CONSTRUCTION.
5. PROVIDE GREENHECK BVE808 OR EQUIVALENT ALUMINUM BRICK VENT WITH INSECT SCREEN.
6. PROVIDE CARBON MONOXIDE SENSOR FOR CONTROLLING FAN.

Park Center Louver Schedule

Tag	Manf.	Model	Purpose	CFM	Size	Max APD	Minimum Free Area (Sq.ft.)	Max FPM	Remarks
LV-01	GREENHECK	EHH-601	INTAKE	100	16X12	0.1	0.16	600	1
LV-02	GREENHECK	ESD-202	EXHAUST	70	8X8	0.13	0.1	900	1
LV-03	GREENHECK	ESD-435	INTAKE	200	12X14	0.1	0.4	600	1

GENERAL NOTES:

A. PROVIDE FRAMED 1/2" x 1/2" ALUMINUM BIRD SCREEN FOR ALL LOUVERS
B. ALL LOUVERS SHALL BE RATED FOR THE PROJECT WIND ZONE. REFER TO STRUCTRAL DRAWINGS.
C. LOUVERS SHALL HAVE 3-COAT 70% PVDF FINISH (AAMA 2605) WITH A DRY FILM THICKNESS OF 2.0 mil MINIMUM. PROVIDE STANDARD AND CUSTOM COLOR CHARTS WITH SUBMITTAL. COLOR SHALL BE SELECTED BY ARCHITECT FROM THE FULL RANGE.
D. ALL LOUVERS SHALL BE AMCA 500-L CERTIFIED FOR AIR PERFORMANCE, WATER PENETRATION,, AND WIND DRIVEN RAIN AND BEAR APPROPRIATE SEAL. ALL LOUVERS SHALL BE RATED AS RAIN PENETRATION CLASS A FOR THE FACE VELOCITY AT THE CFM SCHEDULED.
E. EQUIVALENTS BY RUSKIN, ARROW, AIROLITE, NAILOR, RELIABLE, POTTORFF, OR AS LISTED IN THE SPECIFICATIONS

REMARKS:

1. PROVIDE MOTORIZED DAMPER TO OPEN WHEN ASSOCIATED FAN RUNS

Park Center Grilles, Registers & Diffusers Schedule

Tag	Service	Manufacturer	Model	Type	Deflection Type	Border Application	Neck Size	Face Size	Slots Qty - Width	Blades Spacing - Angle	Remarks
A	Supply	PRICE	SCD	Square Cone	Fixed Deflection	Lay-In Full Face	6"Ø	24x24			1, 2, 3, 4
B	Supply	PRICE	SDGE	Spiral Grille	Double Deflection	Duct Mount Frame	10"x4"			3/4" - 0°	1, 5
C	Supply	PRICE	SDGE	Spiral Grille	Double Deflection	Duct Mount Frame	8"x6"			3/4" - 0°	1, 5
D	Supply	PRICE	SCD	Square Cone	Fixed Deflection	Surface Mount Frame	6"Ø	12x12			1, 2, 3, 4
F	Supply	PRICE	520	Sidewall	Double Deflection	Surface Mount	10"x6"			3/4" - 0°	1, 5, 6
G	Supply	PRICE	ML-39	Slot Diffuser		Surface Mount Frame	10"Ø	4'-0"L	3 - 1"		1, 2, 3, 4, 6
Q	Return	PRICE	PDDR	Perforated		Lay-In Full Face	6"x6"	24x24			1, 2, 3, 4
R	Return	PRICE	SDGER	Spiral Grille		Duct Mount Frame	12"x4"				1, 5
S	Return	PRICE	SDGER	Spiral Grille		Duct Mount Frame	20"x6"				1, 5
T	Return	PRICE	530	Sidewall	Single Deflection	Surface Mount	8"x8"			3/4" - 45°	1, 5, 6
U	Return	PRICE	530	Sidewall	Single Deflection	Surface Mount	14"x18"			3/4" - 45°	1, 5, 6
X	Exhaust	PRICE	530	Sidewall	Single Deflection	Surface Mount	8"x6"			3/4" - 45°	1, 5, 6
Y	Exhaust	PRICE	PDDR	Perforated		Surface Mount	12"x12"	12x12			1, 2, 3, 4, 6
Z	Exhaust	PRICE	PDDR	Perforated		Surface Mount Frame	10"x10"	24x24			1, 2, 3, 4, 6

GENERAL NOTES:

A. BASIS OF DESIGN IS PRICE. EQUIVALENTS BY TITUS, KRUEGER, TUTTLE AND BAILEY, NAILOR, OR AS LISTED IN SPECIFICATIONS
B. PROVIDE VOLUME DAMPERS AT TAKE-OFF FOR EACH GRILLE
C. ALL AIR DISTRIBUTION DEVICES SHALL BE ALUMINUM
D. THE PRICE MODELS SCHEDULED HERE ARE BASIS OF DESIGN, INCLUDING GENERATED NOISE. PROPOSED SUBSTITUTIONS WILL BE JUDGED BY THOSE CRITERIA ALSO
E. WHERE LOCATED IN HARD CEILINGS, PROVIDE ALUMINUM MOUNT FRAME/PLASTER FRAME FOR HARD CEILING THAT ALLOWS DIFFUSER/GRILLE WITH FLEX CONNECTION TO BE LIFTED OUT OF FRAME TO ACCESS CEILING SPACE. TYPICAL OF ALL HARD CEILING LOCATIONS. REFER TO ARCHITECTURAL REFLECTED CEILING PLAN
F. FOR SIDE WALL GRILLES OR GRILLES IN HARD CEILING WHERE BALANCING DAMPER IS INACCESSIBLE, PROVIDE REMOTE CABLE OPERATED, GEAR DRIVEN BALANCING DAMPER OPERABLE FROM FACE OF DIFFUSER

REMARKS:

1. COLOR SHALL BE SELECTED BY ARCHITECT DURING SUBMITTAL REVIEW.
2. PROVIDE WITH TRIM TO MATCH CEILING TYPE. REFER TO ARCHITECTURAL REFLECTED CEILING PLANS FOR CEILINGS
3. PROVIDE DIFFUSER/GRILLE WITH ROUND NECK OR PROVIDE SQUARE TO ROUND TRANSITION
4. ALL CEILING MOUNTED RETURN GRILLES SHALL BE FULL FACED. NO LAY-IN PANELS ALLOWED
5. PROVIDE OPPOSED BLADE ALUMINUM DAMPER
6. WHERE MOUNTED ON A WALL OR OTHER FINISHED ARCHITECTURAL SURFACE, PROVIDE CONCEALED MOUNTING BRACKET OPTION IN LIEU OF COUNTERSUNK SCREW TYPE.

Susan Hatchell
Landscape Architecture, PLLC
711 W. North Street, Raleigh, NC 27603
p: 919-838-9600 f: 919-838-9700

Wooten
120 North Boylan Avenue • Raleigh, NC 27603-1423
(919) 828-0531 • thewootencompany.com
License Number : F-0115

SCHEDULES

NORTH CAROLINA PROFESSIONAL ENGINEER
DocuSigned by:
027928
1E0B95366ACF412...
SCOTT L. ENNIS
7/24/2026

LAKE MYRA COUNTY PARK
Wake County, NC

REVISIONS

Date: 07/27/26

PC-M701

Electrical Abbreviations

1P	1 Pole (2P, 3P, 4P, ETC.)
A, Amp	Ampere
AC	Above Counter
ACLG	Above Ceiling
ADO	Automatic Door Opener
AF	Amp Frame
AFF	Above Finished Floor
AFG	Above Finished Grade
AFI	Arc Fault Circuit Interrupter
AHU	Air Handling Unit
AL	Aluminum
ALT	Alternate
AMP	Ampere
AMPL	Amplifier
ANNUN	Annunciator
APPROX	Approximately
AQ-STAT	Aquastat
ARCH	Architect, Architectural
AS	Amp Switch
AT	Amp Trip
ATS	Automatic Transfer Switch
AUTO	Automatic
AUX	Auxiliary
AV	Audio Visual
AWG	American Wire Gauge
BATT	Battery
BD	Board
BLDG	Building
BMS	Building Management System
C	Conduit
CAB	Cabinet
CAT	Catalog
CATV	Cable Television
CB	Circuit Breaker
CCTV	Closed Circuit Television
CKT	Circuit
CLG	Ceiling
COMB	Combination
CMPR	Compressor
CONN	Connection
CONST	Construction
CONT	Continuation Or Continuous
CONTR	Contractor
CONV	Convector
CP	Circulating Pump
CRT	Cathode-Ray Tube
CT	Current Transformer
CTR	Center
CU	Copper
DCP	Domestic Water Circulating Pump
DEPT	Department
DET	Detail
DIA	Diameter
DISC	Disconnect
DIST	Distribution
DN	Down
DPR	Damper
DS	Safety Disconnect Switch
DT	Double Throw
DWG	Drawing
EC	Electrical Contractor
ELEC	Electric, Electrical
ELEV	Elevator
ELU	Emergency Lighting Unit
EM	Emergency
EMS	Energy Management System
EMT	Electrical Metallic Tubing
EP	Electric Pneumatic
EQUIP	Equipment
EWC	Electric Water Cooler
EXIST	Existing
EXH	Exhaust
EXP	Explosion Proof
FA	Fire Alarm
FABP	Fire Alarm Booster Power Supply Panel
FACP	Fire Alarm Control Panel
FCU	Fan Coil Unit
FIXT	Fixture
FLR	Floor
FLUOR	Fluorescent
FU	Fuse
FUDS	Fused Safety Disconnect Switch
GA	Gauge
GAL	Gallon
GALV	Galvanized
GC	General Contractor
GEN	Generator
GFI	Ground Fault Circuit Interrupter
GFP	Ground Fault Protector
GND	Ground
GRS	Galvanized Rigid Steel (Conduit)
GYP BD	Gypsum Board
HOA	Hands-Off-Automatic Switch
HORIZ	Horizontal
HP	Horsepower
HPF	High Power Factor
HT	Height
HTG	Heating
HTR	Heater
HV	High Voltage
HVAC	Heating, Ventilating And Air Conditioning
IC	Interrupting Capacity
IG	Isolated Ground
IMC	Intermediate Metal Conduit
INCAND	Incandescent
IR	Infrared
I/W	Interlock With
J-BOX	Junction Box
KV	Kilovolt
KVA	Kilovolt-Ampere
KVAR	Kilovolt-Ampere Reactive
KW	Kilowatt
KWH	Kilowatt Hour
LOC	Locate Or Location
LT	Light
LTG	Lighting
LTNG	Lightning
LV	Low Voltage
MAX	Maximum
MAG.S	Magnetic Starter
M/C	Momentary Contact
MC	Mechanical Contractor
MCB	Main Circuit Breaker
MCC	Motor Control Center
MDC	Main Distribution Center
MDP	Main Distribution Panel
MFR	Manufacturer
MFS	Main Fused Disconnect Switch
MH	Manhole
MIC	Microphone
MIN	Minimum
MISC	Miscellaneous
MLO	Main Lugs Only
MMS	Manual Motor Starter
MOA	Multioutlet Assembly
MSP	Motor Starter Paneboard
MSBD	Main Switchboard
MSS	Motor Starter Switch
MT	Mount
MT.C	Empty Conduit
MTS	Manual Transfer Switch
MTR	Motor, Motorized
N.C.	Normally Closed
NEC	National Electrical Code
NEMA	National Electrical Manufacturer's Association
NFDS	Non-Fused Safety Disconnect Switch
NIC	Not In Contract
NL	Night Light
N.O.	Normally Open
NPF	Normal Power Factor
NTS	Not To Scale
OC	On Center
OH	Overhead
OL	Overloads
PA	Public Address
PB	Pull Box Or Pushbutton
PE	Pneumatic Electric
PED	Pedestal
PF	Power Factor
PH	Phase
PIV	Post Indicating Valve
PNL	Panel
PP	Power Pole
PR	Pair
PRI	Primary
PROJ	Projection
PRV	Power Roof Ventilator
PT	Potential Transformer
PVC	Polyvinyl Chloride (Conduit)
PWR	Power
QUAN	Quantity
RCPT	Receptacle
REQD	Required
RM	Room
RSC	Rigid Steel Conduit
RTU	Roof Top Unit
SC	Surface Conduit
SEC	Secondary
SHT	Sheet
SIM	Similar
SLD	Single-Line Diagram
S/N	Solid Neutral
SPEC	Specification
SPKR	Speaker
SP	Spare
SPP	Single-Point Power
SR	Surface Raceway
SS	Stainless Steel
SSW	Selector Switch
S/S	Stop/Start Pushbuttons
STA	Station
STD	Standard
SURF	Surface Mounted
SW	Switch
SWBD	Switchboard
SYM	Symmetrical
SYS	System
TEL	Telephone
TERM	Terminal
TL	Twist Lock
TR	Tamper Resistant
T-STAT	Thermostat
TTC	Telephone Terminal Cabinet
TV	Television
TVTC	Television Terminal Cabinet
TYP	Typical
UC	Under Counter
UE	Underground Electrical
UG	Underground
UH	Unit Heater
UT	Underground Telephone
UTIL	Utility
UV	Ultraviolet
V	Volt
VA	Volt-Amperes
VDT	Video Display Terminal
VERT	Vertical
VFD	Variable Frequency Drive
VOL	Volume
W	Watt
W/	With
WG	Wire Guard
WH	Water Heater
W/O	Without
WP	Weatherproof
XFMR	Transformer
XFR	Transfer

∠	Angle
@	At
▲	Delta
'	Feet
"	Inches
#	Number
Ø	Phase
C	Center Line
P	Plate

ELECTRICAL SYMBOL LEGEND

- A — TYPICAL FIXTURE DESIGNATIONS "A" INDICATES FIXTURE TYPE, SEE LIGHT FIXTURE SCHEDULE FOR DESCRIPTION.
- E — "E" INDICATES EMERGENCY BATTERY W/ LIGHT FIXTURE
- LIGHT FIXTURES, WITH FIXTURE DESIGNATION
- WALL MOUNTED EXIT SIGN. SHADED AREAS INDICATE NUMBER OF FACES, DIRECTION ARROWS AS INDICATED.
- CEILING MOUNTED EXIT SIGN. SHADED AREAS INDICATE NUMBER OF FACES, DIRECTION ARROWS AS INDICATED.
- WALL MOUNTED EMERGENCY BATTERY UNIT.
- $ — TOGGLE SWITCH, MOUNT CENTER AT 46"AFF.
- $3 — THREE-WAY SWITCH, MOUNT CENTER AT 46"AFF.
- $D — DIMMING SWITCH 0-10V, MOUNT CENTER AT 46"AFF.
- $OC — OCCUPANCY SENSOR WALL SWITCH, MOUNT CENTER AT 46"AFF.
- OS — CEILING MOUNTED OCCUPANCY SENSOR
- SBPG-6 — HOME RUN TO PANEL WITH PANEL DESIGNATION (SBPG) & CIRCUIT NUMBER (6). 3/4"C UNLESS NOTED OTHERWISE. SEE RISER DIAGRAM & PANELBOARD SCHEDULES FOR WIRE & CONDUIT SIZES.
- WIRING IN CONDUIT CONCEALED IN WALLS AND ABOVE CEILING.
- WIRING IN CONDUIT UNDERFLOOR OR UNDERGROUND.
- 10'-0" DRIVEN GROUND ROD
- DUPLEX RECEPTACLE, MOUNT CENTER AT 18" AFF UNLESS NOTED OTHERWISE
- SINGLE RECEPTACLE, RATING SHALL MATCH BREAKER SIZE
- PANELBOARD, SEE SCHEDULES & DETAILS.
- DISCONNECT SWITCH
- JUNCTION BOX
- CONCEALED SERVICE FLOOR BOX WITH DUPLEX RECEPTACLE
- CONCEALED SERVICE FLOOR BOX WITH DUPLEX RJ45
- DATA/DATA JACK, DATA JACK, CENTER AT 18" AFF.
- 15cd — CEILING MOUNTED FIRE ALARM AUDIO-VISUAL UNIT. STROBE RATING AS INDICATED (15).
- 75cd — WALL MOUNTED FIRE ALARM AUDIO VISUAL UNIT, STROBE RATING AS INDICATED (15). MOUNT BOTTOM AT 80"AFF.
- 15cd — WALL MOUNTED FIRE ALARM STROBE, RATING AS INDICATED (15). MOUNT BOTTOM AT 80"AFF.
- 15cd — CEILING MOUNTED FIRE ALARM VISUAL UNIT, STROBE RATING AS INDICATED (15).
- F — FIRE ALARM MANUAL PULL STATION. MOUNT AT 48"AFF TO TOP OF BOX. WHEN SHOWN AT EXTERIOR DOOR, LOCATE 5' MAX FROM DOOR.
- S — CEILING MOUNTED SMOKE DETECTOR
- MM — FIRE ALARM MONITOR MODULE
- RAP — FIRE ALARM ANNUNCIATOR PANEL
- FACP — FIRE ALARM CONTROL PANEL

SEE LIGHT FIXTURE SCHEDULE SHEET 'ES-E001'

Electrical General Notes

A Conductors operating at 50 volts or greater shall be in raceway. Raceway within the structure above the floor slab shall be metal. Raceway below the floor slab and underground raceway outside the structure shall be PVC.

B Low voltage cables or conductors operating at less than 50 volts shall be in metal raceway where installed within walls or inaccessible spaces. Low voltage cables may be run in cable tray where noted. Low voltage cables may be run in cable support hooks above accessible ceilings where noted. Low voltage cable shall be plenum rated in plenum spaces.

B Low voltage cables or conductors operating at less than 50 volts shall be in metal raceway. Low voltage cables may be run in cable tray where noted. Low voltage cable shall be plenum rated in plenum spaces.

C Coordinate locations of devices with architectural elevations and details. Architectural elevations and details take precedence over locations shown on electrical drawings.

D Provide cable or conduit and wire as required to achieve circuiting shown. Size conductors per NEC ampacity and wire fill criteria. Provide dedicated neutral and ground conductors for circuiting, unless noted otherwise. Increase branch circuit and/or feeder conductors including equipment grounding conductors proportionally for no more than 3% voltage drop on branch circuits and 2% on feeders per energy code.

E It is the responsibility of this contractor to coordinate installation of electrical systems and those requiring electrical connections to maintain NEC required clearances, included but not limited to areas above accessible ceilings.

F Coordinate with other trades for proper installation of equipment. Consult the drawings of other trades or crafts to avoid conflicts with equipment, etc. Conflicts shall be resolved prior to rough-in and at no additional cost to the owner.

G Leave the site clean and ready for occupancy. Remove dirt, debris, empty cartons, tools, conduit and wire scraps, and miscellaneous spare equipment and materials used in this division of the work during construction. Components shall be free of dust, grit, and foreign materials and left as new before final acceptance of work.

H The symbols and abbreviations shown on this sheet may or may not be used in this set of drawings.

I Perform work to comply with the standard practices for good workmanship published by National Electrical Contractors Association (NECA). Comply with the latest enforced edition of the National Electrical Code (NEC), local codes, amendments, and ordinances.

J Field coordinate final mechanical and equipment locations along with connection requirements and control wiring prior to rough-in. Adjust corresponding circuit breaker ratings and branch circuiting accordingly.

K Electrical work shall be performed under the supervision of a licensed master electrician. Procure permits and licenses and pay fees associated with this work.

L Materials furnished for this project shall be new, commercial grade, free of defects, and listed by a nationally recognized testing laboratory unless noted otherwise.

M Provide complete operation & maintenance manual including approved submittal drawings, warranty information for product supplied, and manufactures operation and maintenance instructions.

N The contractor is responsible for making final wiring terminations to pre-installed receptacles in office furniture. Contractor is responsible for wiring and installing voice/data devices in office furniture. Coordinate placement of devices with furniture lay-out.

O Security system to be provided under separate contract. It is the responsibility of this contractor to provide conduit provisions, back boxes, rough-ins, sleeves and power to head end equipment for exact requirements prior to start of work.

P Conduit and wire shall not be installed below floor slab unless indicated on plan by dashed conduit.

Q Contractor shall be responsible for wiring electrical items shown on drawings except for items listed in note 'R' below.

R TV outlets, volume controls, nurse call dome lights, nurse call devices, telephone outlets, data outlets, and fire alarm devices shall consist of a back box with conduit stubbed above the accessible ceiling, see stub up detail. Verify size of back box required with device to be installed. Locate back boxes 6" from adjacent power receptacle intended for computer use.

S Furnish and install conduit from back boxes for the following devices into the accessible ceiling space in the corridor, unless noted otherwise:
1/2"C TV outlets
1/2"C Volume controls
1/2"C Door security devices (card readers, door strikes etc..)
1/2"C Nurse call dome lights
3/4"C Nurse call devices
3/4"C Telephone outlets
3/4"C Information outlets
3/4"C Fire alarm devices

PARK CENTER ELECTRICAL SHEET INDEX

PC-E001	ELECTRICAL COVER SHEET
PC-E101	POWER PLANS
PC-E201	LIGHTING PLANS
PC-E401	ELECTRICAL DETAILS
PC-E402	FIRE ALARM DETAILS
PC-E501	ELECTRICAL SCHEDULES

PARK CENTER

ELECTRICAL SYSTEM AND EQUIPMENT

METHOD OF COMPLIANCE:

ENERGY CODE: PRESCRIPTIVE__X__ PERFORMANCE_____
ASHRAE 90.1: PRESCRIPTIVE_____ PERFORMANCE_____

LIGHTING SCHEDULE

Lamp type required in fixture - See Fixture Schedule.
Number of lamps in fixture - See Fixture Schedule.
Ballast type used in the fixture - See Specifications.
Number of ballasts in fixture - See Specifications.
Total wattage per fixture - Varies - See Fixture Schedule

Total interior wattage specified versus allowed: 4181 watts versus 9585 watts (whole building)
Total exterior wattage specified versus allowed: 450 watts versus 1550 watts

ADDITIONAL PRESCRIPTIVE COMPLIANCE

___ 406.2 More Efficient HVAC Performance
_X_ 406.3 Reduced Lighting Power Density
___ 406.4 Enhanced Lighting Controls
___ 406.5 On-Site Supply of Renewable Energy
___ 406.6 Provision of Dedicated Outdoor HVAC Air System
___ 406.7 High Efficiency Service Water Heating

DESIGNER STATEMENT:
To the best of my knowledge and belief, the design of this building complies with the electrical system and equipment requirements of the 2018 North Carolina State Building Code, Energy Conservation Code.

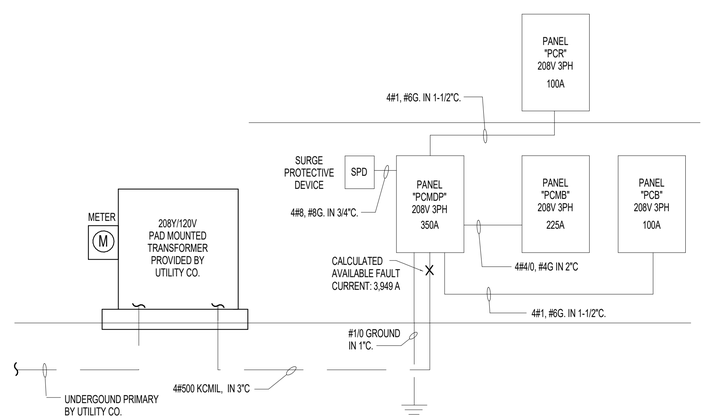

3 / PC-E001 ELECTRICAL POWER RISER - PARK CENTER
NOT TO SCALE

Susan Hatchell
Landscape Architecture, PLLC
711 W. North Street, Raleigh, NC 27603
p: 919-838-9600 f: 919-838-9700

Wooten
120 North Boylan Avenue • Raleigh, NC 27603-1423
(919) 828-0531 • thewootencompany.com
License Number : F-0115

ELECTRICAL COVER SHEET

NORTH CAROLINA PROFESSIONAL ENGINEER SEAL 19765 ROBERT E. EGAN 7/24/2026

LAKE MYRA COUNTY PARK
Wake County, NC

REVISIONS

Date: 07/27/26

PC-E001

FIRE RATED WALL LEGEND

2 HR

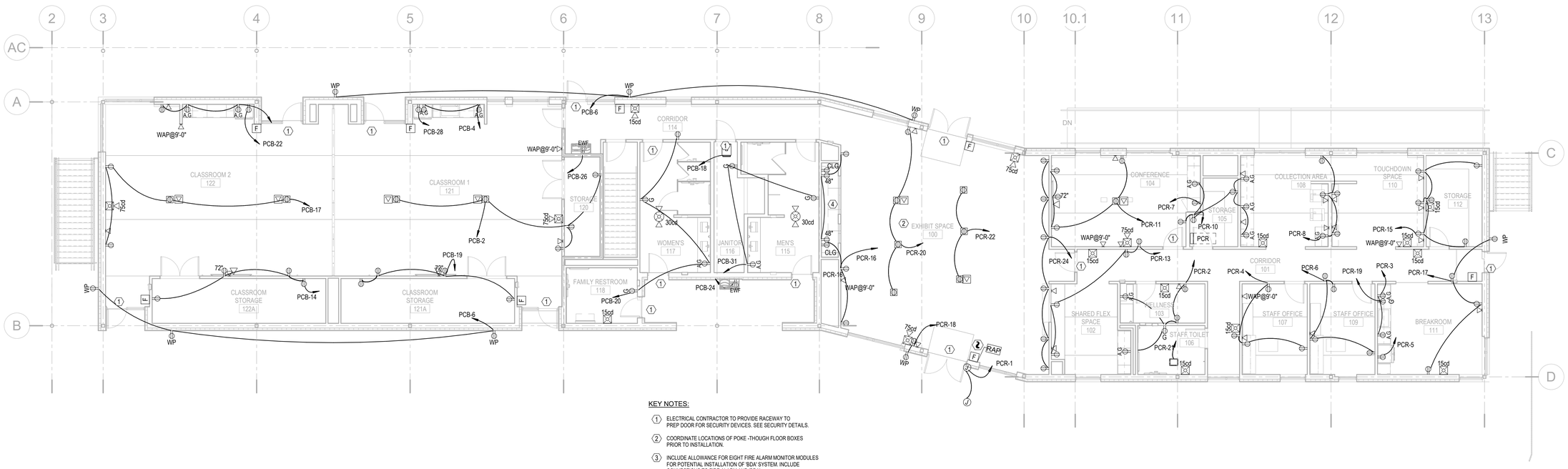

2 PC-E101 FIRST FLOOR POWER PLAN
1/8" = 1'-0"

KEY NOTES:

1. ELECTRICAL CONTRACTOR TO PROVIDE RACEWAY TO PREP DOOR FOR SECURITY DEVICES. SEE SECURITY DETAILS.
2. COORDINATE LOCATIONS OF POKE -THOUGH FLOOR BOXES PRIOR TO INSTALLATION.
3. INCLUDE ALLOWANCE FOR EIGHT FIRE ALARM MONITOR MODULES FOR POTENTIAL INSTALLATION OF 'BDA' SYSTEM. INCLUDE CONNECTIONS TO FIRE ALARM AND 'BDA'.
4. COORDINATE LOCATIONS OF RECEPTACLES IN CASEWORK WITH EXHIBIT DESIGNER PRIOR TO INSTALLATION.

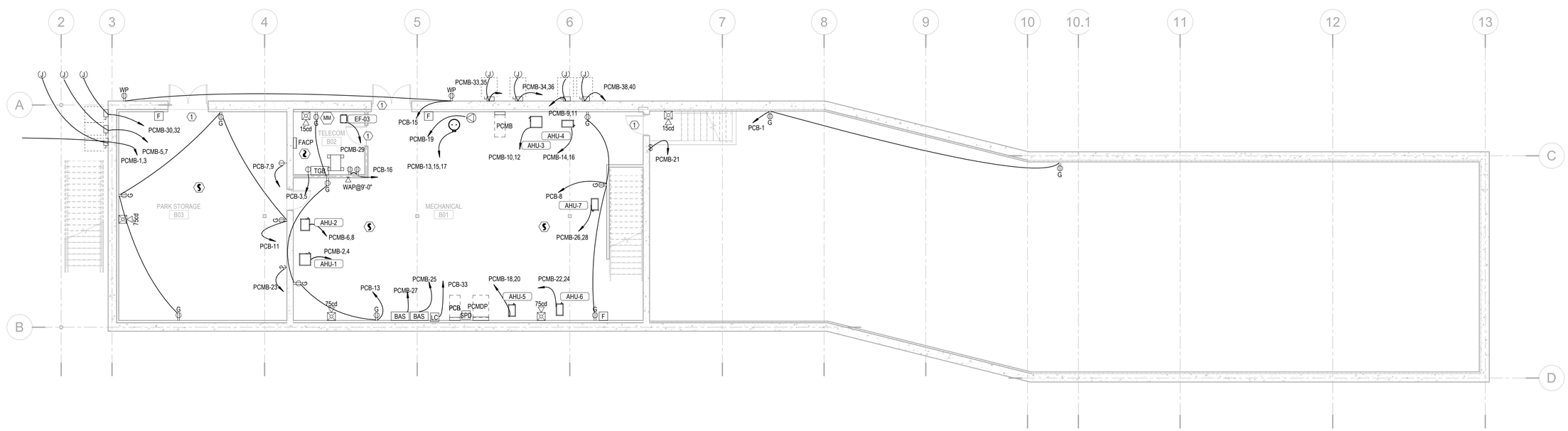

1 PC-E101 BASEMENT/CRAWLSPACE POWER PLAN
1/8" = 1'-0"

Susan Hatchell
Landscape Architecture, PLLC
711 W. North Street, Raleigh, NC 27603
p: 919-838-9600 f: 919-838-9700

Wooten
120 North Boylan Avenue • Raleigh, NC 27603-1423
(919) 828-0531 • thewootencompany.com
License Number : F-0115

POWER PLANS

NORTH CAROLINA PROFESSIONAL ENGINEER SEAL 16765 ROBERT E. EGAN
Signed by:
7/24/2026

LAKE MYRA COUNTY PARK
Wake County, NC

REVISIONS

Date: 07/27/26

PC-E101

FIRE RATED WALL LEGEND
2 HR

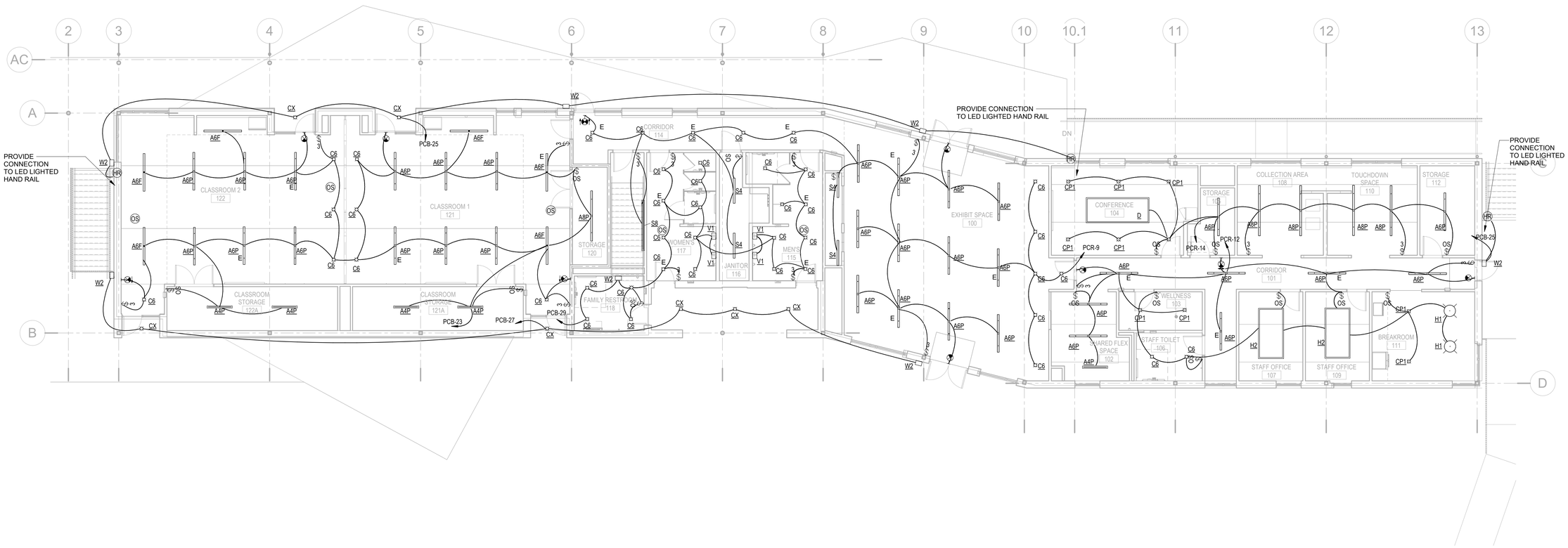

2 PC-E201 FIRST FLOOR LIGHTING PLAN
1/8" = 1'-0"
0 2' 4' 6'

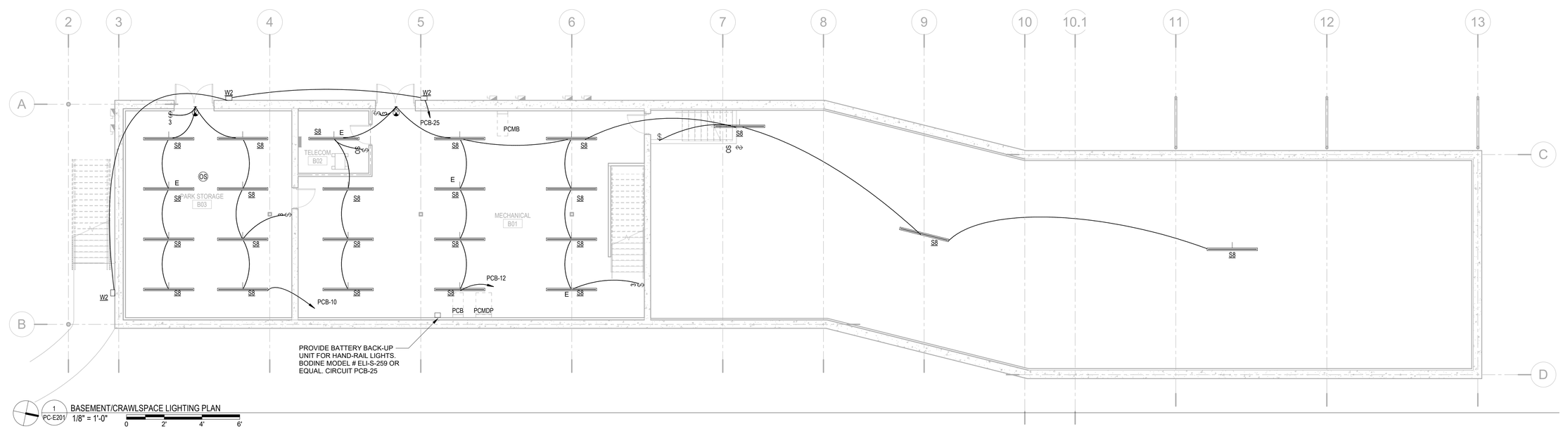

1 PC-E201 BASEMENT/CRAWLSPACE LIGHTING PLAN
1/8" = 1'-0"
0 2' 4' 6'

Susan Hatchell
Landscape Architecture, PLLC
711 W. North Street, Raleigh, NC 27603
p: 919-838-9600 f: 919-838-9700

Wooten
120 North Boylan Avenue • Raleigh, NC 27603-1423
(919) 828-0531 • thewootencompany.com
License Number : F-0115

LIGHTING PLANS

NORTH CAROLINA PROFESSIONAL ENGINEER SEAL 16765 ROBERT E. EGAN
Signed by:
7/24/2026

LAKE MYRA COUNTY PARK
Wake County, NC

REVISIONS

Date: 07/27/26

PC-E201

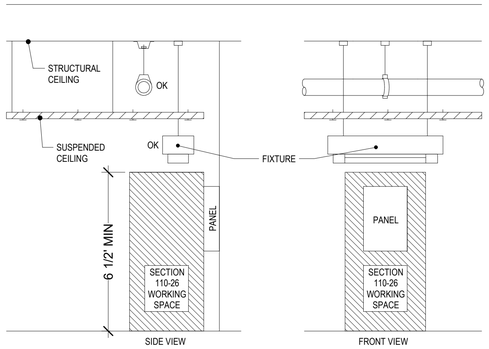

WORKING CLEARANCE FOR ELECTRICAL EQUIPMENT
N.E.C ARTICLE 110-26

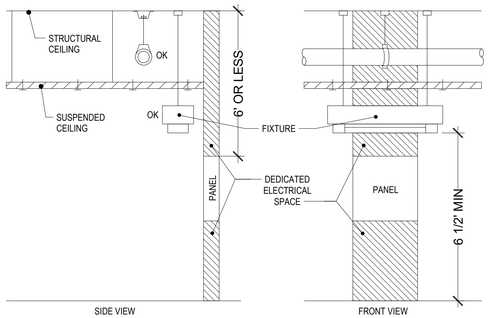

DEDICATED SPACE FOR ELECTRICAL EQUIPMENT
N.E.C ARTICLE 110-26(F)(1)

4 PC-E401 ELECTRICAL EQUIPMENT CLEARANCE
NOT TO SCALE

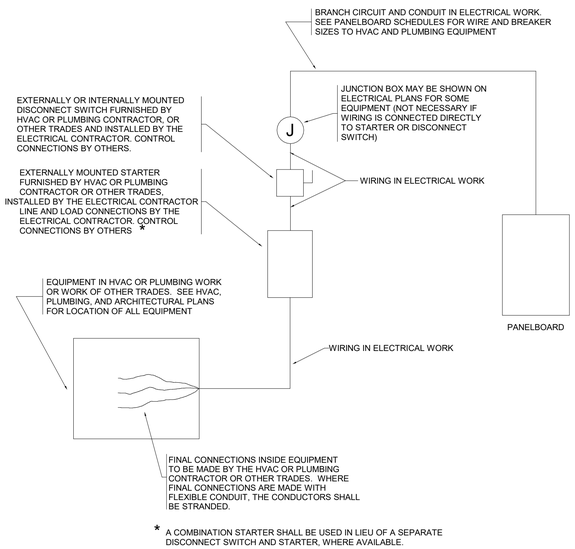

3 PC-E401 DETAIL - TYPICAL EQUIPMENT CONNECTIONS
NOT TO SCALE

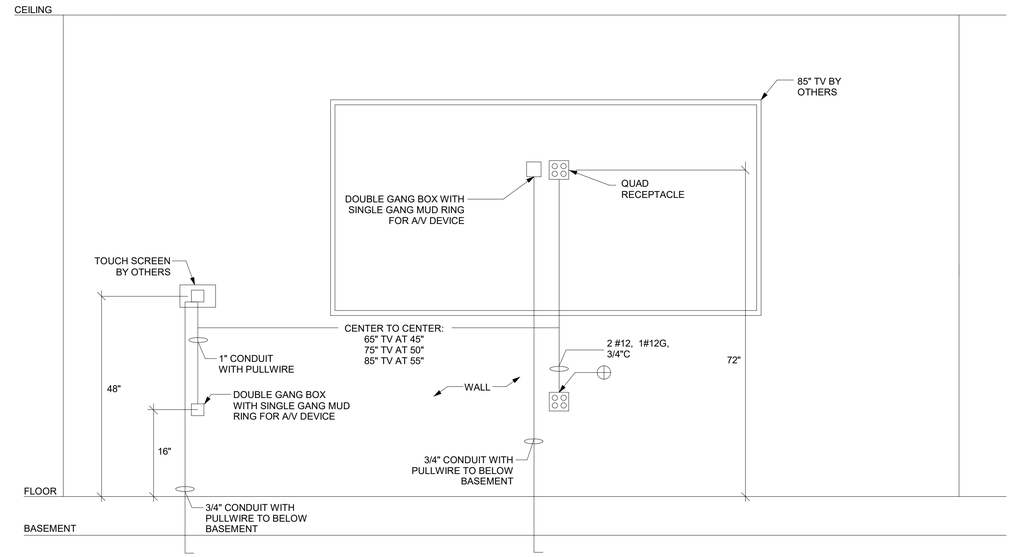

2 PC-E401 AV MOUNTING HEIGHT DETAIL
NOT TO SCALE

System No. W-L-1054

c UL us
Classified by Underwriters Laboratories, Inc. to UL 1479 and CAN/ULC-S115

ANSI/UL1479 (ASTM E814)	CAN/ULC S115
F Ratings —1 and 2 Hr (See Items 1 and 3)	F Ratings — 1 and 2 Hr (See Items 1 and 3)
T Rating — 0 Hr	FT Rating — 0 Hr
L Rating at Ambient — Less Than 1 CFM/sq ft	FH Ratings —1 and 2 Hr (See Items 1 and 3)
L Rating at 400 F — Less Than 1 CFM/sq ft	FTH Rating — 0 Hr
	L Rating at Ambient — Less Than 1 CFM/sq ft
	L Rating at 400 F — Less Than 1 CFM/sq ft

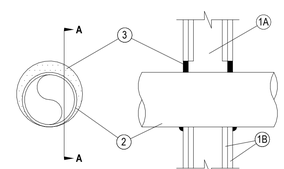

SECTION A-A

1. Wall Assembly — The 1 or 2 hr fire-rated gypsum wallboard/stud wall assembly shall be constructed of the materials and in the manner specified in the individual U300 or U400 Series Wall and Partition Designs in the UL Fire Resistance Directory and shall include the following construction features:
   A. Studs — Wall framing may consist of either wood studs or steel channel studs. Wood studs to consist of nom 2 by 4 in. (51 by 102 mm) lumber spaced 16 in. (406 mm) OC. Steel studs to be min 2-1/2 in. (64 mm) wide and spaced max 24 in. (610 mm) OC. When steel studs are used and the diam of opening exceeds the width of stud cavity, the opening shall be framed on all sides using lengths of steel stud installed between the vertical studs and screw-attached to the steel studs at each end. The framed opening in the wall shall be 4 to 6 in. (102 to 152 mm) wider and 4 to 6 in. (102 to 152 mm) higher than the diam of the penetrating item such that, when the penetrating item is installed in the opening, a 2 to 3 in. (51 to 76 mm) clearance is present between the penetrating item and the framing on all four sides.
   B. Gypsum Board* — 5/8 in. (16 mm) thick, 4 ft (122 cm) wide with square or tapered edges. The gypsum board type, thickness, number of layers, fastener type and sheet orientation shall be as specified in the individual U300 or U400 Series Design in the UL Fire Resistance Directory. Max diam of opening is 32-1/4 in. (819 mm) for steel stud walls. Max diam of opening is 14-1/2 in. (368 mm) for wood stud walls. The F and FH Ratings of the firestop system are equal to the fire rating of the wall assembly.
2. Through-Penetrants — One metallic pipe, conduit or tubing to be installed either concentrically or eccentrically within the firestop system. The annular space shall be min 0 in. to max 2-1/4 in. (57 mm). Pipe may be installed with continuous point contact. Pipe, conduit or tubing to be rigidly supported on both sides of wall assembly. The following types and sizes of metallic pipes, conduits or tubing may be used:
   A. Steel Pipe — Nom 30 in. (762 mm) diam (or smaller) Schedule 10 (or heavier) steel pipe.
   B. Iron Pipe — Nom 30 in. (762 mm) diam (or smaller) cast or ductile iron pipe.
   C. Conduit — Nom 4 in. (102 mm) diam (or smaller) steel electrical metallic tubing or 6 in. (152 mm) . diam steel conduit.
   D. Copper Tubing — Nom 6 in. (152 mm) diam (or smaller) Type L (or heavier) copper tubing.
   E. Copper Pipe — Nom 6 in. (152 mm) diam (or smaller) regular (or heavier) copper pipe.
3. Fill, Void or Cavity Material* — Sealant — Min 5/8 in. (16 mm) thickness of fill material applied within the annulus, flush with both surfaces of wall. At the point or continuous contact locations between pipe and wall, a min 1/2 in. (13 mm) diam bead of fill material shall be applied at the pipe wall interface on both surfaces of wall.
   HILTI CONSTRUCTION CHEMICALS, DIV OF HILTI INC — FS-One Sealant or FS-ONE MAX Intumescent Sealant

* Indicates such products shall bear the UL or cUL Certification Mark for jurisdictions employing the UL or cUL Certification (such as Canada), respectively.

1 PC-E401 1 OR 2 HR PENETRATION
NOT TO SCALE

Susan Hatchell
Landscape Architecture, PLLC
711 W. North Street, Raleigh, NC 27603
p: 919-838-9600 f: 919-838-9700

Wooten
129 North Boylan Avenue • Raleigh, NC 27603-1423
(919) 828-0531 • thewootencompany.com
License Number : F-0115

ELECTRICAL DETAILS

NORTH CAROLINA PROFESSIONAL ENGINEER SEAL
Signed: 16765
ROBERT E. EGAN
7/24/2026

LAKE MYRA COUNTY PARK
Wake County, NC

REVISIONS

Date: 07/27/26

PC-E401

GENERAL FIRE ALARM RISER NOTES:

A. SEE PLANS FOR LOCATIONS AND QUANTITIES OF ALL DEVICES.
B. ALL WIRING SHALL BE IN MINIMUM 3/4" CONDUIT.
C. BATTERY CALCULATIONS ARE REQUIRED WITH ALL SUBMITTALS.
D. TEST RESULTS ARE REQUIRED FOR ALL DEVICES.
E. VERIFY ROOM NUMBERS WITH ARCHITECT PRIOR TO PROGRAMMING SYSTEM.
F. ALL NAC PANELS AND AMPLIFIER PANELS SHALL HAVE A SMOKE DETECTOR MOUNTED WITHIN 15'-0" OF PANEL.
G. A SMOKE DETECTOR SHALL BE MOUNTED WITHIN 15'-0" OF FACP AND NAC PANELS.
H. IF ANY ARCHITECTURAL CHANGES ARE MADE THAT SHALL AFFECT ANY DEVICE PLACEMENT, THIS SHALL BE BROUGHT TO THE ATTENTION OF THE ENGINEER PRIOR TO INSTALLATION.
I. THE MANUFACTURER'S AUTHORIZED REPRESENTATIVE SHALL BE NICET LEVEL 3 CERTIFIED AND HAVE AT LEAST 2 YEARS OF EXPERIENCE INSTALLING FIRE ALARM SYSTEMS.
J. THE PROJECT MANAGER SHALL BE NICET LEVEL 4 CERTIFIED AND HAVE AT LEAST 5 YEARS OF EXPERIENCE INSTALLING FIRE ALARM SYSTEMS.
K. THE SHOP DRAWINGS SUBMITTALS FOR DEVICE LOCATIONS SHALL BE SUBMITTED TO ENGINEER AND LOCAL (AHJ) FIRE MARSHALL PRIOR TO ANY INSTALLATION/ ROUGH-IN FOR FIRE ALARM DEVICES.
L. WIRING DIAGRAMS. LOCATION DRAWINGS, DEVICE CUT SHEETS AND VOLTAGE DROP CALCULATIONS ARE REQUIRED WITH ALL SUBMITTALS.
M. THE FIRE ALARM SYSTEM PROVIDER SHALL PROVIDE ALL DOCUMENTATION AS SPECIFIED IN THE INTERNATIONAL FIRE CODE SECTION 907 REQUIREMENTS AS PART OF HIS SHOP DRAWING SUBMITTALS.
   THIS INCLUDES:
   1. LOCATION DRAWINGS OF ALARM INITIATING AND NOTIFICATION DEVICES.
   2. BATTERY CALCULATIONS.
   3. WIRING DIAGRAMS WITH CONDUCTOR TYPE AND SIZES.
   4. LOCATIONS OF ALARM CONTROL AND TROUBLE SIGNALING EQUIPMENT.
   5. POWER CONNECTION DETAILS AND WIRING SCHEMATICS.
   6. VOLTAGE DROP CALCULATIONS.
   7. MANUFACTURER'S MODEL NUMBERS, LISTING INFORMATION FOR EQUIPMENT, DEVICES AND MATERIALS.
   8. THE INTERFACE OF FIRE SAFETY CONTROL FUNCTIONS.
N. REFER TO DIVISION 28 SPECIFICATIONS.
O. FIRE ALARM SIGNAL LINE CIRCUITS SHALL BE WIRED CLASS "A" AND NOTIFICATION CIRCUITS SHALL BE WIRED CLASS "B" WITH THE END OF LINE RESISTOR CLEARLY AND PERMANENTLY MARKED ON THE LAST DEVICE.
P. PROVIDE SPARE PARTS AS DEFINED IN SPECIFICATIONS.

FIRE ALARM SIGNAL LINE CIRCUITS SHALL BE WIRED CLASS "A" AND NOTIFICATION CIRCUITS SHALL BE WIRED CLASS "B" WITH THE END OF LINE RESISTOR CLEARLY AND PERMANENTLY MARKED ON THE LAST DEVICE.

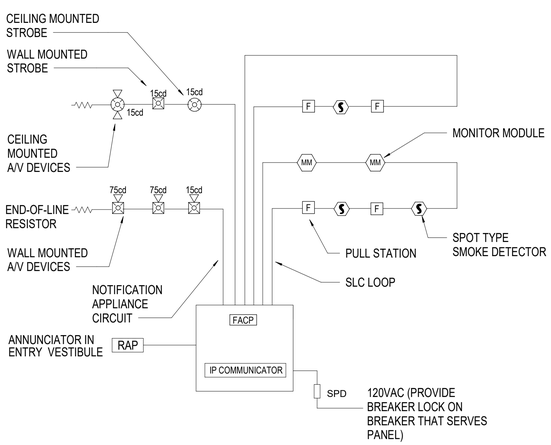

3 PC-E402 FIRE ALARM RISER
NOT TO SCALE

NFPA 72 AND ADA DEVICE INSTALLATION REQUIREMENTS

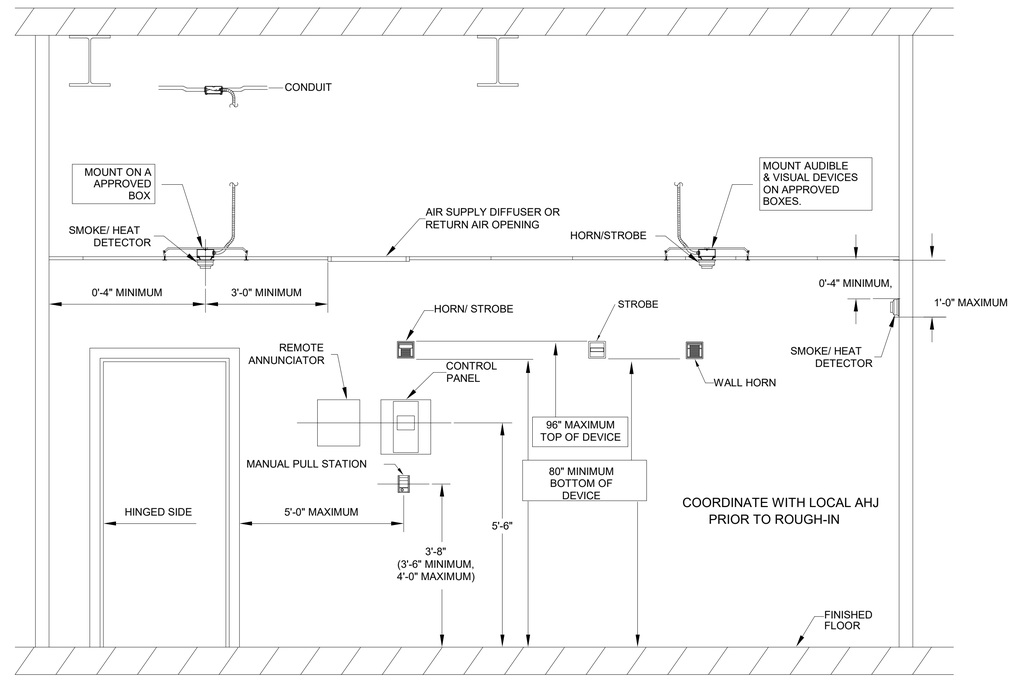

FIRE ALARM DEVICE MOUNTING

1 PC-E402 FIRE ALARM DEVICE MOUNTING
NOT TO SCALE

GENERAL NOTES:

A. VERIFY OPERATION WITH LOCAL AHJ PRIOR TO PROGRAMMING.

SYSTEM INPUTS

		A	B	C	D	E	F	G	H	I	J	K	L	M	O	
		ACTUATE GENERAL ALARM SPEAKERS/STROBES	ACTUATE AUDIBLE ALARM SIGNAL	ACTUATE SUPERVISORY SIGNAL INDICATOR	ACTUATE AUDIBLE SUPERVISORY SIGNAL	ACTUATE COMMON TROUBLE SIGNAL INDICATOR	ACTUATE AUDIBLE COMMON TROUBLE SIGNAL	ACTUATE ALL EVACUATION SIGNALS	TRANSMIT FIRE ALARM SIGNAL TO SUPERVISING STATION	TRANSMIT TROUBLE SIGNAL TO SUPERVISING STATION	TRANSMIT SUPERVISORY SIGNAL TO SUPERVISING STATION			DISPLAY CHANGE OF STATUS AT FACP	SHUTDOWN ALL AIR HANDLING UNITS	
1	MANUAL PULL STATIONS 1ST FLOOR	o	o					o	o					o	o	1
2	MANUAL PULL STATIONS BASEMENT	o	o					o	o					o	o	2
3	SMOKE DETECTORS 1ST FLOOR	o	o					o	o					o	o	3
4	SMOKE DETECTORS BASEMENT	o	o					o	o					o	o	4
5	FIRE ALARM SYSTEM AC POWER FAILURE	o	o					o	o					o		5
6	FIRE ALARM SYSTEM LOW BATTERY					o	o			o				o		6
7	NAC PANELS LOW BATTERY					o	o			o				o		7
8	OPEN CIRCUIT					o	o			o				o		8
9	GROUND FAULT					o	o			o				o		9
10	NOTIFICATION APPLIANCE SHORT CIRCUIT					o	o			o				o		10

2 PC-E402 FIRE ALARM MATRIX
NOT TO SCALE

Susan Hatchell
Landscape Architecture, PLLC
711 W. North Street, Raleigh, NC 27603
p: 919-838-9600 f: 919-838-9700

Wooten
128 North Boylan Avenue • Raleigh, NC 27603-1423
(919) 828-0531 • thewootencompany.com
License Number : F-0115

FIRE ALARM DETAILS

NORTH CAROLINA PROFESSIONAL ENGINEER SEAL
Signed by: 16765
ROBERT E. EGAN
7/24/2026

LAKE MYRA COUNTY PARK
Wake County, NC

REVISIONS

Date: 07/27/26

PC-E402

Panel Name: PCR
Location: STORAGE 105
Supply: PCMDP
Mounting Recessed
Enclosure: Type 1

Voltage: 208Y/120/3Ø, 4W

Mains Type: MLO
Mains Rating: 100 A

SCCR: 10000

Ckt	Description	Rating	Poles	Wire Size	Phase A Load (VA)		Phase B Load (VA)		Phase C Load (VA)		Wire Size	Poles	Rating	Description	Ckt
1	POWER DOOR OPERATOR	20	1	2#12, #12G, 3/4"C	720	900					2#12, #12G, 3/4"C	1	20	REC - GENERAL 102, 103, 101	2
3	REC BREAKROOM 111	20	1	2#12, #12G, 3/4"C			360	720			2#12, #12G, 3/4"C	1	20	REC - GENERAL 104, 105	4
5	REFRIG BREAKROOM 111	20	1	2#12, #12G, 3/4"C					700	720	2#12, #12G, 3/4"C	1	20	REC - GENERAL 106, 104	6
7	REFRIG CONFERENCE 104	20	1	2#12, #12G, 3/4"C	700	900					2#12, #12G, 3/4"C	1	20	REC - GENERAL 109, 110	8
9	EXHIBIT SPACE 100	20	1	2#12, #12G, 3/4"C			725	1260			2#12, #12G, 3/4"C	1	20	REC - GENERAL 111, 112, 110	10
11	REC - GENERAL ROOM 100, 112	20	1	2#12, #12G, 3/4"C					900	428	2#12, #12G, 3/4"C	1	20	LIGHTING CORRIDOR 104	12
13	REC - GENERAL 100, 104, 112,...	20	1	2#12, #12G, 3/4"C	720	339					2#12, #12G, 3/4"C	1	20	LIGHTING ROOM 111, 112	14
15	RECEPTS 109, 108	20	1	2#12, #12G, 3/4"C			1080	1260			2#12, #12G, 3/4"C	1	20	REC - EXHIBIT SPACE 100	16
17	REC - GENERAL ROOM 107, 104	20	1	2#12, #12G, 3/4"C					720	360	2#12, #12G, 3/4"C	1	20	REC - GENERAL	18
19	MICROWAVE RM 111	20	1	2#12, #12G, 3/4"C	1200	720					2#12, #12G, 3/4"C	1	20	REC EXHIBIT SPACE 100	20
21	E.F. STAFF TOILET 106	20	1	2#12, #12G, 3/4"C			360	540			2#12, #12G, 3/4"C	1	20	REC EXHIBIT SPACE 100	22
23	SPARE	20	1	--					0	1080	2#12, #12G, 3/4"C	1	20	REC EXHIBIT SPACE 100	24
25	SPARE	20	1	--	0	0					--	1	20	SPARE	26
27	SPARE	20	1	--			0	0			--	1	20	SPARE	28
29	SPARE	--	1	--					--	0	--	1	20	SPARE	30
31	SPARE	--	1	--	--	0					--	1	20	SPARE	32
33	SPACE	--	1	--			--	--			--	1	--	SPACE	34
35	SPACE	--	1	--					--	--	--	1	--	SPACE	36
				Connected Load:	6 kVA		6 kVA		5 kVA						
				Connected Current:	53 A		54 A		41 A						

(Includes load connected via feed-thru lugs.)

Load Classification	Connected	Factor	Demand
Other	1080 VA	100.00%	1080 VA
Lighting - Interior	1492 VA	125.00%	1865 VA
Receptacle - General	14840 VA	83.69%	12420 VA
HVAC	0 VA	0.00%	0 VA

Panel Totals	
Connected Load:	17 kVA
Connected Current:	48 A
Demand Load:	15 kVA
Demand Current:	43 A

Notes:
PROVIDE GROUND FAULT BREAKERS FOR CIRCUITS 5,7.

Panel Name: PCMDP
Location: MECHANICAL B01
Supply:
Mounting Surface
Enclosure: Type 1

Voltage: 208Y/120/3Ø, 4W

Mains Type: MCB
Mains Rating: 350 A

SCCR: 14000

Ckt	Description	Rating	Poles	Wire Size	Phase A Load (VA)		Phase B Load (VA)		Phase C Load (VA)		Wire Size	Poles	Rating	Description	Ckt
1	PANEL "PCR"	100	3	4#1, #8G, 1-1/2"C	6199	2250					3#6, #10G, 3/4"C	2	50	FOOD TRUCK RECEPTACLE	2
3							6305	2250							4
5									4908	2250	3#6, #10G, 3/4"C	2	50	FOOD TRUCK RECEPTACLE	6
7	PANEL "PCMB"	225	3	4-4/0, #6G, 2"C	28448	2250									8
9							31683	2250			3#6, #10G, 3/4"C	2	50	FOOD TRUCK RECEPTACLE	10
11									29103	2250					12
13	PANEL "PCB"	100	3	4#1, #8G, 1-1/2"C	7189	0					4#8, #8G, 3/4"C	3	40	SURGE PROTECTION	14
15							3746	0							16
17									6315	0					18
19	SPARE	60	2	--	0	0					--	3	50	SPARE	20
21							0	0							22
23	SPARE	20	1	--					0	0					24
25	SPACE	--	1	--	--	--					--	1	--	SPACE	26
27	SPACE	--	1	--			--	--			--	1	--	SPACE	28
29	SPACE	--	1	--					--	--	--	1	--	SPACE	30
				Connected Load:	46 kVA		46 kVA		45 kVA						
				Connected Current:	388 A		387 A		374 A						

(Includes load connected via feed-thru lugs.)

Load Classification	Connected	Factor	Demand
Motor	255 VA	125.00%	319 VA
Other	35920 VA	100.00%	35920 VA
Lighting - Interior	3963 VA	125.00%	4953 VA
Receptacle - General	24560 VA	70.36%	17280 VA
Receptacle - Dedicated	1000 VA	100.00%	1000 VA
Electric Water Heating	10000 VA	125.00%	12500 VA
HVAC	0 VA	0.00%	0 VA
Electric Heat	28700 VA	125.00%	35875 VA
Kitchen Equipment	800 VA	100.00%	800 VA
Non-Concurrent	32200 VA	5.00%	1610 VA

Panel Totals	
Connected Load:	137 kVA
Connected Current:	381 A
Demand Load:	110 kVA
Demand Current:	306 A

Notes:
SERVICE RATED. PROVIDE GROUND FAULT BREAKERS FOR CIRCUITS 2,6,10.

Panel Name: PCMB
Location: MECHANICAL B01
Supply: PCMDP
Mounting Surface
Enclosure: Type 1

Voltage: 208Y/120/3Ø, 4W

Mains Type: MLO
Mains Rating: 225 A

SCCR: 14000

Ckt	Description	Rating	Poles	Wire Size	Phase A Load (VA)		Phase B Load (VA)		Phase C Load (VA)		Wire Size	Poles	Rating	Description	Ckt
1	HP-01	40	2	2#8, #10G, 3/4"C	2300	3720					2#6, #10G, 3/4"C	2	50	AHU-01	2
3							2300	3720							4
5	HP-02	40	2	2#8, #10G, 3/4"C					2300	3720	2#6, #10G, 3/4"C	2	50	AHU-02	6
7					2300	3720									8
9	HP-03	40	2	2#8, #10G, 3/4"C			2300	4470			2#4, #8G, 1"C	2	60	AHU-03	10
11									2300	4470					12
13	WATER HEATER	40	3	3#8, #10G, 3/4"C	3333	2620					2#8, #10G, 3/4"C	2	40	AHU-04	14
15							3333	2620							16
17									3333	2620	2#8, #10G, 3/4"C	2	40	AHU-05	18
19	CIRCULATING PUMP	20	1	2#12, #12G, 3/4"C	255	2620									20
21	DEHUNIDIFIER	20	1	2#12, #12G, 3/4"C			440	2620			2#8, #10G, 3/4"C	2	40	AHU-06	22
23	DEHUNIDIFIER	20	1	2#12, #12G, 3/4"C					440	2620					24
25	BAS PANEL	20	1	2#12, #12G, 3/4"C	360	2620					2#8, #10G, 3/4"C	2	40	AHU-07	26
27	BAS PANEL	20	1	2#12, #12G, 3/4"C			360	2620							28
29	EF-03 TELECOM B02	20	1	2#12, #12G, 3/4"C					400	2300	2#8, #10G, 3/4"C	2	40	HP-04	30
31	SPARE	20	1	--	0	2300									32
33	HP-06	40	2	2#8, #10G, 3/4"C			2300	2300			2#8, #10G, 3/4"C	2	40	HP-05	34
35									2300	2300					36
37	SPARE	20	1	--	0	2300					2#8, #10G, 3/4"C	2	40	HP-07	38
39	SPARE	20	1	--			0	2300							40
41	SPACE	--	1	--					--	--	--	1	--	SPACE	42
				Connected Load:	28 kVA		32 kVA		29 kVA						
				Connected Current:	237 A		265 A		243 A						

(Includes load connected via feed-thru lugs.)

Load Classification	Connected	Factor	Demand
Motor	255 VA	125.00%	319 VA
Other	18080 VA	100.00%	18080 VA
Electric Water Heating	10000 VA	125.00%	12500 VA
HVAC	0 VA	0.00%	0 VA
Electric Heat	28700 VA	125.00%	35875 VA
Non-Concurrent	32200 VA	5.00%	1610 VA

Panel Totals	
Connected Load:	89 kVA
Connected Current:	248 A
Demand Load:	68 kVA
Demand Current:	190 A

Notes:

Panel Name: PCB
Location: MECHANICAL B01
Supply: PCMDP
Mounting Surface
Enclosure: Type 1

Voltage: 208Y/120/3Ø, 4W

Mains Type: MLO
Mains Rating: 100 A

SCCR: 10000

Ckt	Description	Rating	Poles	Wire Size	Phase A Load (VA)		Phase B Load (VA)		Phase C Load (VA)		Wire Size	Poles	Rating	Description	Ckt
1	REC 124	20	1	2#12, #12G, 3/4"C	360	900					2#12, #12G, 3/4"C	1	20	REC - GENERAL CLASSROOM 120	2
3	REC TELECOM B02	20	2	3#12, #12G, 3/4"C			250	360			2#12, #12G, 3/4"C	1	20	REC - GENERAL CLASSROOM 120	4
5									250	1080	2#12, #12G, 3/4"C	1	20	REC - GENERAL	6
7	REC PARK STORAGE B03	20	2	3#12, #12G, 3/4"C	250	540					2#12, #12G, 3/4"C	1	20	REC MECHANICAL ROOM-2 125A-2	8
9							250	227			2#12, #12G, 3/4"C	1	20	LIGHTING PARK STORAGE 125	10
11	REC - PARK STORAGE	20	1	2#12, #12G, 3/4"C					720	422	2#12, #12G, 3/4"C	1	20	BASEMENT LIGHTS	12
13	REC - IT ROOM 126	20	1	2#12, #12G, 3/4"C	720	720					2#12, #12G, 3/4"C	1	20	REC - CLASS STORAGE 122	14
15	REC - GENERAL	20	1	2#12, #12G, 3/4"C			360	360			2#12, #12G, 3/4"C	1	20	REC TELECOM B02	16
17	REC - GENERAL	20	1	2#12, #12G, 3/4"C					720	0	2#12, #12G, 3/4"C	1	20	MOTOR CUSTODIAL 115	18
19	REC - CLASSROOM STORAGE...	20	1	2#12, #12G, 3/4"C	720	720					2#12, #12G, 3/4"C	1	20	REC - GENERAL WOMENS 116	20
21	REC - GENERAL CLASSROOM...	20	1	2#12, #12G, 3/4"C			540	400			2#12, #12G, 3/4"C	1	20	REFRIG 122	22
23	LIGHTING	20	1	2#12, #12G, 3/4"C					841	180	2#12, #12G, 3/4"C	1	20	EWC- EXTERIOR	24
25	EXTERIOR LIGHTING	20	1	2#12, #12G, 3/4"C	289	180					2#12, #12G, 3/4"C	1	20	EWC CORRIDOR 114	26
27	EXTERIOR LIGHTING	20	1	2#12, #12G, 3/4"C			239	400			2#12, #12G, 3/4"C	1	20	REFRIG 123	28
29	LIGHTING FAMILY RESTROOM...	20	1	2#12, #12G, 3/4"C					453	1250	3#10, #12G, 3/4"C	2	20	GATE OPERATOR AND HOT BOX	30
31	REC MEN'S 115	20	1	2#12, #12G, 3/4"C	540	1250									32
33	TIME CLOCK/CONTACTOR	20	1	2#12, #12G, 3/4"C			360	0			--	1	20	SPARE	34
35	FIRE ALARM PANEL	20	1	2#12, #12G, 3/4"C					400	0	--	1	20	SPARE	36
37	SPARE	20	1	--	0	0					--	1	20	SPARE	38
39	SPARE	20	1	--			0	0			--	1	20	SPARE	40
41	SPACE	--	1	--					--	--	--	1	--	SPACE	42
				Connected Load:	7 kVA		4 kVA		6 kVA						
				Connected Current:	63 A		31 A		56 A						

(Includes load connected via feed-thru lugs.)

Load Classification	Connected	Factor	Demand
Motor	0 VA	0.00%	0 VA
Other	3260 VA	100.00%	3260 VA
Lighting - Interior	2470 VA	125.00%	3088 VA
Receptacle - General	9720 VA	100.00%	9720 VA
Receptacle - Dedicated	1000 VA	100.00%	1000 VA
Kitchen Equipment	800 VA	100.00%	800 VA

Panel Totals	
Connected Load:	17 kVA
Connected Current:	48 A
Demand Load:	18 kVA
Demand Current:	50 A

Notes:
PROVIDE GROUND FAULT BREAKERS FOR CIRCUITS 22,24,26,28

Susan Hatchell
Landscape Architecture, PLLC
711 W. North Street, Raleigh, NC 27603
p: 919-838-9600 f: 919-838-9700

Wooten
120 North Boylan Avenue • Raleigh, NC 27603-1423
(919) 828-0531 • thewootencompany.com
License Number : F-0115

ELECTRICAL SCHEDULES

NORTH CAROLINA PROFESSIONAL ENGINEER SEAL
Signed by: 16765
ROBERT E. EGAN
7/24/2026

LAKE MYRA COUNTY PARK
Wake County, NC

REVISIONS

Date: 07/27/26

PC-E501