LAKE MYRA COUNTY PARK MAINTENANCE FACILITY

Wake County, North Carolina

JULY 27, 2026 – CONSTRUCTION DOCUMENT SET

SITE DATA

NAME:	LAKE MYRA COUNTY PARK	
OWNER:	WAKE COUNTY	
DEVELOPER:	WAKE COUNTY	
CONTACT:	ERIC STAEHLE PLA, ASLA, SENIOR FACILITIES PROJECT MANAGER	
ADDRESS:	WAKE COUNTY OFFICE BUILDING, 11th FLOOR, RALEIGH, NC 27602	
PHONE NUMBER:	919.856.6369	
	WESTERN PARCEL:	EASTERN PARCEL:
PROPERTY ADDRESS:	0 S SMITHFIELD ROAD	10505 POOLE ROAD
PARCEL ID NUMBER (PIN):	1763-51-9788	1763-84-1077
DEED BOOK AND PAGE:	DB: 12448, PG: 2075	DB: 12590, PG: 1251
ZONING DISTRICT:	WAKE COUNTY, ZONED R-40	WENDELL, ZONED R3
TOTAL LAND AREA:	91.81 ACRES	125.76 ACRES
PROPOSED DISTURBED AREA:	6.5 ACRES	12 ACRES
CURRENT USE:	UNDEVELOPED	UNDEVELOPED
PROPOSED USE:	PARK/RECREATION FACILITY	PARK/RECREATION FACILITY
EXISTING IMPERVIOUS AREA:		
PROPOSED IMPERVIOUS AREA:		
PROPOSED BUILDING:		
FLOOD INFORMATION:		
WATER AND SEWER SERVICE:		
ELECTRICAL SERVICE:		

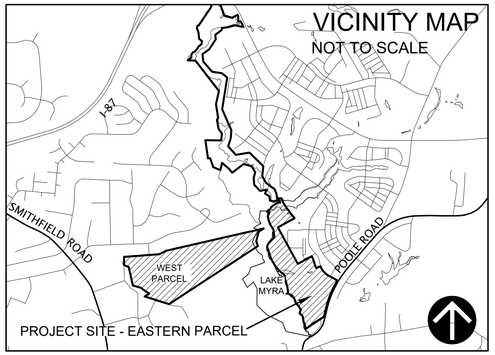

SHEET INDEX

COVER SHEET

ARCHITECTURE
MF-G001 – ABBREVIATIONS, SYMBOLS, AND GENERAL NOTES
MF-G101 – CODE SUMMARY
MF-G102 – LIFE SAFETY PLAN
MF-A000 – 3D VIEW
MF-A001 – PARTITIONS
MF-A101 – FLOOR PLAN & DIMENSIONED PLAN
MF-A102 – DUMPSTER ENCLOSURE PLANS AND DETAILS
MF-A111 – REFLECTED CEILING AND ROOF PLANS
MF-A130 – FINISH LEGEND
MF-A131 – FINISH PLAN, LEGEND AND SCHEDULE
MF-A132 – SIGNAGE PLAN & DETAILS
MF-A140 – FURNITURE PLAN
MF-A201 – EXTERIOR ELEVATIONS
MF-A202 – EXTERIOR PANEL LAYOUT
MF-A203 – EXTERIOR PANEL LAYOUT
MF-A301 – BUILDING SECTIONS
MF-A400 – TYPICAL TOILET AND BATH ACCESSORIES
MF-A401 – TOILET PLANS AND ELEVATIONS
MF-A402 – INTERIOR ELEVATIONS
MF-A421 – WALL SECTIONS
MF-A422 – WALL SECTIONS
MF-A501 – PLAN DETAILS
MF-A505 – AIR BARRIER DETAILS
MF-A506 – AIR BARRIER DETAILS
MF-A510 – MILLWORK DETAILS
MF-A511 – INTERIOR DETAILS
MF-A521 – HEAD, JAMB AND SILL DETAILS
MF-A522 – HEAD, JAMB AND SILL DETAILS
MF-A525 – ROOF DETAILS
MF-A526 – ROOF DETAILS
MF-A527 – ROOF DETAILS
MF-A601 – DOOR AND WINDOW SCHEDULES

STRUCTURAL
MF-S001 – GENERAL NOTES
MF-S002 – GENERAL NOTES
MF-S003 – GENERAL NOTES
MF-S004 – GENERAL NOTES
MF-S101 – MAINTENANCE FACILITY SLAB AND FOUNDATION PLAN
MF-S102 – MAINTENANCE FACILITY ROOF FRAMING PLAN
MF-S301 – SECTIONS
MF-S302 – SECTIONS
MF-S501 – TYPICAL DETAILS
MF-S502 – TYPICAL DETAILS
MF-S503 – TYPICAL DETAILS

PLUMBING
MF-P001 – COVER SHEET
MF-P105 – FLOOR PLANS
MF-P700 – DETAILS

MECHANICAL
MF-M001 – COVER SHEET
MF-M101 – FLOOR PLAN
MF-M601 – DETAILS & SCHEDULES

ELECTRICAL
MF-E001 – COVER SHEET
MF-E101 – POWER AND LIGHTING PLANS
MF-E102 – ROOF PLAN
MF-E501 – DETAILS

Landscape Architect / Prime Consultant:
Susan Hatchell Landscape Architecture, PLLC
711 W. North Street
Raleigh, NC 27603
T: (919) 838-9600

Civil Engineer, Site Structural, and Surveyor:
NV5
3300 Regency Parkway, Suite 100
Cary, NC 27518

Architect:
Esse Architects
632 Pershing Road
Raleigh, NC 27608

Building Structural Engineer:
Lynch Mykins Structural Engineers, PC
301 N. West Street, Suite 105
Raleigh, NC 27603

MEP Engineer:
The Wooten Company
120 N Boylan Avenue
Raleigh, NC 27603

Docusign Envelope ID: CA5E972F-88DE-84DD-82F4-6DC4C04FE625

AREA MAP

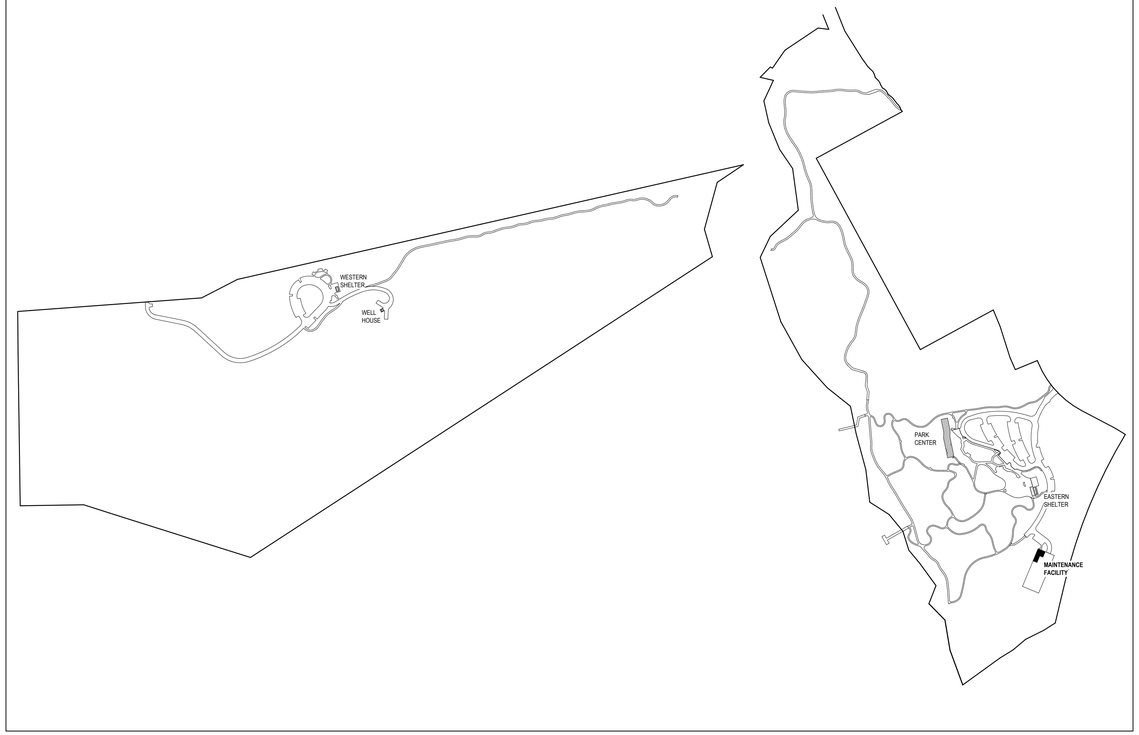

ABBREVIATIONS

ABBR.	FULL DESCRIPTION
@	AT
A/C	AIR CONDITION(ER)(ING)
AB	AIR BARRIER
ACC	ACCESSIBLE
ACM	ALUMINUM COMPOSITE MATERIAL
ADJ	ADJACENT
AFF	ABOVE FINISH FLOOR
AL	ALUMINUM
ALT	ALTERNATE
ARCH	ARCHITECT(URAL)
BD	BOARD
BFF	BELOW FINISH FLOOR
BLDG	BUILDING
BLKG	BLOCKING
BOS	BOTTOM OF STEEL
BRG	BEARING
CG	CORNERGUARD
CJ	CONTROL JOINT
CL	CENTERLINE
CLG	CEILING
CLR	CLEAR/CLEARANCE
CMU	CONCRETE MASONRY UNIT
COL	COLUMN
CONC	CONCRETE
CONT	CONTINUOUS
CPT	CARPET
CW	CURTAIN WALL
DEMO	DEMOL(ISH)(ITION)
DF	DRINKING FOUNTAIN
DIA	DIAMETER
DIM	DIMENSION
DN	DOWN
DS	DOWNSPOUT
DTL	DETAIL
DWG	DRAWING
EA	EACH
EIFS	EXTERIOR INSULATION AND FINISH SYSTEM
ELEC	ELECTRICAL
EOD	EDGE OF DECK
EOS	EDGE OF STEEL
EQ	EQUAL
EWC	ELECTRIC WATER COOLER
EXST	EXISTING
EXT	EXTERIOR
FD	FLOOR DRAIN
FE	FIRE EXTINGUISHER
FEC	FIRE EXTINGUISHER CABINET
FF	FINISH FLOOR
FIN	FINISH
FLR	FLOOR
FPRF	FIREPROOFING
FRT	FIRE RETARDANT TREATED
FT	FOOT/FEET

ABBREVIATIONS

ABBR.	FULL DESCRIPTION
FV	FIELD VERIFY
GA	GAUGE
GALV	GALVANIZED
GC	GENERAL CONTRACTOR
GFRC	GLASS FIBER REINFORCED CONCRETE
GL	GLASS
GWB	GYPSUM WALLBOARD
GYP	GYPSUM
HGT	HEIGHT
HM	HOLLOW METAL
HR	HOUR
HVAC	HEATING, VENTILATION, AND AIR CONDITIONING
INFO	NFORMATIONI
INT	INTERIOR
JT	JOINT
LAV	LAVATORY
LB	POUND
LH	LEFT HAND
MAX	MAXIMUM
MECH	MECHANICAL
MFR	MANUFACTURER
MIN	MINIMUM
MISC	MISCELLANEOUS
MO	MASONRY OPENING
MTL	METAL
N	NORTH
NA	NOT APPLICABLE
NC	NON-COMBUSTIBLE
NCSBC	NORTH CAROLINA STATE BUILDING CODE
NIC	NOT IN CONTRACT
NO	NUMBER
NTS	NOT TO SCALE
OC	ON CENTER
OM	ORNAMENTAL METAL
OPP	OPPOSITE
PL	PLATE
PLAM	PLASTIC LAMINATE
PLBG	PLUMBING
PME	PLUMBING/MECHANICAL/ELECTRICAL
PT	PRESSURE-TREATED
PVC	POLYVINYL CHLORIDE
PWD	PLYWOOD
RCP	REFLECTED CEILING PLAN
RD	ROOF DRAIN
RDL	ROOF DRAIN LEADER
REF	REFRIGERATOR
REINF	REINFORCE(D)(ING)(MENT)
REQ	REQUIRED
RH	RIGHT HAND
RM	ROOM
RO	ROUGH OPENING
RTU	ROOF TOP UNIT
SCW	SOLID CORE WOOD

ABBREVIATIONS

ABBR.	FULL DESCRIPTION
SF	SQUARE FOOT/FEET
SFT	STOREFRONT
SIM	SIMILAR
SPEC	SPECIFICATION
SPECS	SPECIFICATIONS
SQ	SQUARE
SS	STAINLESS STEEL
STD	STANDARD
STL	STEEL
SUSP	SUSPENDED
T&G	TONGUE AND GROOVE
THRU	THROUGH
TLT	TOILET
TOBB	TOP OF BOND BEAM
TOM	TOP OF MASONRY
TOP	TOP OF PARAPET
TOS	TOP OF STEEL
TSTAT	THERMOSTAT
TYP	TYPICAL
UL	UNDERWRITERS LABORATORY
UON	UNLESS OTHERWISE NOTED
VB	VAPOR BARRIER
VCT	VINYL COMPOSITION TILE
VIF	VERIFY IN FIELD
W/	WITH
W/I	WITHIN
W/O	WITHOUT
WC	WATER CLOSET
WD	WOOD
WT	WEIGHT
WWF	WELDED WIRE FABRIC

MATERIAL LEGEND

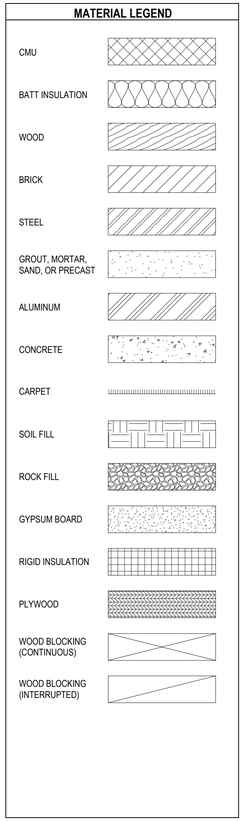

SYMBOL LEGEND

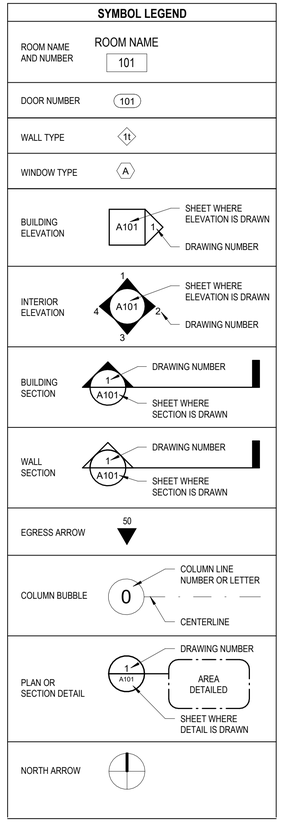

GENERAL NOTES

1. GENERAL CONTRACTOR IS RESPONSIBLE FOR OBTAINING AND PAYING FOR PERMITS AND INSPECTIONS REQUIRED BY PUBLIC AUTHORITIES GOVERNING THE WORK.
2. REVIEW DOCUMENTS AND VERIFY DIMENSIONS AND FIELD CONDITIONS. REPORT ANY CONFLICTS OR OMISSIONS TO THE ARCHITECT FOR CLARIFICATION PRIOR TO PERFORMING ANY WORK IN QUESTION.
3. CONTRACTOR TO NOTIFY ARCHITECT OF ANY DISCREPANCIES BETWEEN ARCHITECTURAL AND CONSULTANT DRAWINGS AND SHALL OBTAIN WRITTEN CLARIFICATION FROM ARCHITECT BEFORE PROCEEDING WITH THE WORK IN QUESTION OR RELATED WORK.
4. SUBMIT REQUESTS FOR SUBSTITUTIONS, REVISIONS, OR CHANGES TO ARCHITECT FOR REVIEW PRIOR TO PURCHASE, FABRICATION, OR INSTALLATION.
5. OWNER WILL PROVIDE WORK NOTED "BY OTHERS" OR "NIC" UNDER SEPARATE CONTRACT. INCLUDE SCHEDULE REQUIREMENTS IN CONSTRUCTION PROGRESS SCHEDULE AND COORDINATE TO ASSURE ORDERLY SEQUENCE OF INSTALLATION, UNLESS OTHERWISE DIRECTED. NOTIFY ARCHITECT OF ANY CONFLICTS OR DISCREPANCIES WITH NIC ITEMS.
6. COORDINATE TELECOMMUNICATIONS, DATA, AND SECURITY SYSTEM INSTALLATIONS.
7. DO NOT SCALE DRAWINGS; WRITTEN DIMENSIONS GOVERN. IN CASE OF CONFLICT, CONSULT THE ARCHITECT.
8. PROVIDE A PORTABLE FIRE EXTINGUISHER WITHIN 75 FOOT TRAVEL DISTANCE TO ALL PORTIONS OF THE BUILDING ON EACH FLOOR, AND ADDITIONAL FIRE EXTINGUISHERS AS REQUIRED BY FIRE OR BUILDING FIELD INSPECTORS.
9. PROVIDE ILLUMINATED EXIT SIGN OVER REQUIRED EXITS, WHERE SHOWN ON DRAWINGS, AND ADDITIONAL SIGNS AS REQUIRED BY FIRE OR BUILDING FIELD INSPECTORS. CONNECT EXIT SIGNS TO EMERGENCY POWER CIRCUITS. SEE ELECTRICAL DRAWINGS.
10. PRIOR TO CORING SLAB FOR FLOOR POWER OR DATA, OR POURING AROUND POWER/DATA LOCATIONS, REVIEW LOCATIONS WITH ARCHITECT AND OWNER.
11. GANG ADJACENT LIGHT SWITCHES AND COVER WITH A SINGLE PLATE.
12. MAINTAIN INTEGRITY OF FIRE RESISTANCE RATING OF ALL RATED SHAFT ENCLOSURES AND RATED PARTITIONS BEHIND RECESSED WALL ACCESSORIES, SUCH AS FIRE EXTINGUISHER CABINETS, TOILET ACCESSORIES, AND ELECTRICAL BOXES.
13. NO EXPOSED CONDUIT, WIRING, PIPING, OR BOXES ARE PERMITTED WITHOUT ARCHITECT APPROVAL, UNLESS SPECIFICALLY NOTED OTHERWISE.
14. GENERAL CONTRACTOR WILL BE RESPONSIBLE FOR COORDINATION BETWEEN THE TRADES PROVIDING SYSTEMS IN OPEN CEILING CONDITIONS. COORDINATION DRAWINGS AND ANY CONFLICTS ARE TO BE REVIEWED WITH THE ARCHITECT PRIOR TO INSTALLATION.
15. REFER TO THE PROJECT MANUAL FOR COMPLETE GENERAL REQUIREMENTS AND CONDITIONS OF THE CONTRACT. THE PROJECT MANUAL SHALL TAKE PRECEDENCE OVER THESE GENERAL NOTES IN THE EVENT OF A CONFLICT.
16. IF PROVIDED, REFER TO ENLARGED PLANS AND PLAN DETAILS FOR ADDITIONAL INFORMATION AND DIMENSIONS.
17. ANY DIMENSIONS OF, OR TYING IN TO, EXISTING BUILDING COMPONENTS ARE TO BE FIELD VERIFIED PRIOR TO COMMENCEMENT OF WORK. REVIEW ANY DISCREPANCIES WITH ARCHITECT PRIOR TO COMMENCEMENT OF WORK.
18. TYPICAL DETAILS SHOWN ON THE DRAWINGS SHALL BE INCORPORATED AT ALL APPROPRIATE LOCATIONS WHETHER OR NOT SPECIFICALLY REFERENCED AT EACH LOCATION.
19. IN AREAS OF HARD CEILING, BUILDING SYSTEMS SHALL BE CONFIGURED TO AVOID OR MINIMIZE ABOVE-CEILING ACCESS. THE LOCATION OF ALL ACCESS DOORS MUST BE COORDINATED WITH AND APPROVED BY ARCHITECT PRIOR TO THE INSTALLATION OF ANY ABOVE-CEILING EQUIPMENT, DAMPERS, VALVES, JUNCTION BOXES, ETC. ANY ACCESS DOORS OR PANELS REQUIRED IN WALLS MUST ALSO BE COORDINATED WITH AND APPROVED BY THE ARCHITECT PRIOR TO THE INSTALLATION OF THE EQUIPMENT REQUIRING ACCESS.
20. CONTRACTOR SHALL BE SOLELY RESPONSIBLE FOR THE ACCURACY OF HIS MEASUREMENTS AND TAKE-OFFS FOR MATERIAL ORDERS.
21. VARIATIONS IN FLOOR LEVEL IN EXCESS OF 1/8" FOR EVERY 10'-0" (U.O.N.) SHALL BE LEVELED BY CONTRACTOR.

Susan Hatchell
Landscape Architecture, PLLC
711 W. North Street, Raleigh, NC 27603
p: 919-838-9600 f: 919-838-9700

Esse Architects
630 PERSHING ROAD | RALEIGH, NORTH CAROLINA 27608

ABBREVIATIONS, SYMBOLS, AND GENERAL NOTES

LAKE MYRA COUNTY PARK
Wake County, NC

Esse Architects P.A. Registered Architectural Corporation 52498 North Carolina Raleigh, NC

MIRANDA DONNER POTTHOFF Registered Architect 17663 Signature Miranda Potthoff Date: 7/27/26 NORTH CAROLINA Raleigh, NC 7/27/2026

REVISIONS

Date: 07/27/26

MF-G001

Docusign Envelope ID: CA5E972F-88DE-84DD-82F4-6DC4C04FE625

2018 APPENDIX B - MAINTENANCE FACILITY
BUILDING CODE SUMMARY FOR ALL COMMERCIAL PROJECTS
(EXCEPT 1 AND 2-FAMILY DWELLINGS AND TOWNHOUSES)

NAME OF PROJECT: LAKE MYRA COUNTY PARK
ADDRESS: EASTERN PARCEL - 10505 POOLE ROAD, WENDELL, NC 27591

OWNER: ERIC STAEHLE PHONE #: (919)856-6369 E-MAIL: eric.staehle@wake.gov
AUTHORIZED AGENT: JENNIFER STEED PHONE #: (919)845-8397 E-MAIL: jennifer@susanhatchell.com
OWNED BY: ■ COUNTY ☐ PRIVATE ☐ STATE
CODE ENFORCEMENT JURISDICTION: ☐ CITY: RALEIGH, NC ■ COUNTY: WAKE ☐ STATE

CONTACT: JENNIFER STEED, SUSAN HATCHELL LANDSCAPE ARCHITECTURE

DESIGNER	FIRM	NAME	LICENSE #	PHONE #	EMAIL
ARCHITECTURAL	ESSE ARCHITECTS	MIRANDA POTTHOFF	11663	(919)270-6455	miranda@esse-architects.com
LANDSCAPE	SUSAN HATCHELL LANDSCAPE ARCH.	SUSAN HATCHELL	528	(919)845-8397	susan@susanhatchell.com
CIVIL	NV5	MICHAEL ALLEN	22514	(919)858-1888	michael.allen@nv5.com
ELECTRICAL	THE WOOTEN COMPANY	ROBERT EGAN	16765	(919)828-0531	began@thewootencompany.com
FIRE ALARM	THE WOOTEN COMPANY	ROBERT EGAN	16765	(919)828-0531	began@thewootencompany.com
PLUMBING	THE WOOTEN COMPANY	SCOTT ENNIS	029728	(919)828-0531	sennis@sigmaes.com
MECHANICAL	THE WOOTEN COMPANY	SCOTT ENNIS	029728	(919)828-0531	sennis@sigmaes.com
SPRINKLER	N/A				
STRUCTURAL	LYNCH MYKINS / IMEG	SCOTT FRANCIS	044996	(757) 502-8527	scott.m.francis@imegcorp.com
RETAINING WALLS	N/A				

2018 NC BUILDING CODE: ■ NEW CONSTRUCTION ☐ PHASED CONSTRUCTION
☐ 1ST TIME INTERIOR COMPLETION ☐ RENOVATION
☐ SHELL/CORE ☐ ADDITION

2018 NC EXISTING BUILDING CODE: ☐ PRESCRIPTIVE ☐ REPAIR ☐ CHAPTER 14
ALTERATION: ☐ LEVEL I ☐ LEVEL II ☐ LEVEL III
☐ HISTORIC ☐ CHANGE OF USE

CONSTRUCTED N/A CURRENT OCCUPANCY (CHAPTER 3) N/A
RENOVATED N/A PROPOSED OCCUPANCY (CHAPTER 3) N/A
OCCUPANCY CATEGORY: (TABLE 1604.5) CURRENT: ☐ I ☐ II ☐ III ☐ IV
PROPOSED: ☐ I ☐ II ☐ III ☐ IV

BASIC BUILDING DATA
CONSTRUCTION TYPE: ☐ I-A ☐ II-A ☐ III-A ☐ IV ☐ V-A
☐ I-B ■ II-B ☐ III-B ☐ V-B

SPRINKLERS: ☐ N/A ☐ YES ■ NO ☐ PARTIAL
■ N/A ☐ NFPA 13 ☐ NFPA 13R ☐ NFPA 13 D
STANDPIPES: ■ NO ☐ CLASS 1 WET ☐ CLASS 1 DRY ☐ CLASS II WET ☐ CLASS II DRY
☐ CLASS III WET ☐ CLASS III DRY

FIRE DISTRICT: ■ NO ☐ YES FLOOD HAZARD AREA: ■ NO ☐ YES
SPECIAL INSPECTIONS REQUIRED: ☐ NO ■ YES

GROSS BUILDING AREA TABLE:

FLOOR	EXISTING (SQ FT)	NEW (SQ FT)	SUB-TOTAL
6TH FLOOR	N/A	N/A	N/A
5TH FLOOR	N/A	N/A	N/A
4TH FLOOR	N/A	N/A	N/A
3RD FLOOR	N/A	N/A	N/A
2ND FLOOR	N/A	N/A	N/A
MEZZANINE	N/A	N/A	N/A
1ST FLOOR	N/A	3,561	3,561
BASEMENT	N/A	N/A	N/A
TOTAL			3,561

ALLOWABLE AREA
PRIMARY OCCUPANCY: ASSEMBLY ☐ A-1 ☐ A-2 ☐ A-3 ☐ A-4 ☐ A-5
■ BUSINESS ☐ EDUCATIONAL FACTORY ☐ F-1 MODERATE ☐ F-2 LOW
HAZARDOUS ☐ H-1 DETONATE ☐ H-2 DEFLAGRATE ☐ H-3 COMBUST ☐ H-4 HEALTH ☐ H-5 HPM
INSTITUTIONAL ☐ I-1 CONDITION 1 ☐ I-1 CONDITION 2 ☐ I-2 CONDITION 1 ☐ I-2 CONDITION 2
I-3 CONDITION ☐ 1 ☐ 2 ☐ 3 ☐ 4 ☐ 5 ☐ I-4
MERCANTILE ☐ RESIDENTIAL ☐ R-1 ☐ R-2 ☐ R-3 ☐ R-4
STORAGE ■ S-1 ☐ S-1 HIGH PILED ☐ S-2 S-2 HIGH-PILED ☐ STORAGE GARAGE OPEN
☐ UTILITY AND MISCELLANEOUS ☐ REPAIR GARAGE ☐ PARKING GARAGE ENCLOSED
ACCESSORY OCCUPANCY CLASSIFICATION: NA
INCIDENTAL USES: TABLE 509 NA
SPECIAL USES (CHAPTER 4 - LIST CODE SECTIONS): NA
SPECIAL PROVISIONS (CHAPTER 5 - LIST CODE SECTIONS): NA
MIXED OCCUPANCY: ☐ NO ■ YES SEPARATION: 0 EXCEPTION

ACTUAL AREA OF OCCUPANCY A / ALLOWABLE AREA OF OCCUPANCY A + ACTUAL AREA OF OCCUPANCY B / ALLOWABLE AREA OF OCCUPANCY B <.. 1

1,484 / 40,250 + 1,682 / 30,625 = 0.037 + 0.055 = 0.092 < 1

STORY NO.	DESCRIPTION AND USE	(A) BLDG AREA PER STORY (ACTUAL)	(B) TABLE 506.2 AREA	(C) AREA FOR FRONTAGE INCREASE	(D) AREA FOR SPRINKLER INCREASE[1]	(E) ALLOWABLE AREA OR UNLIMITED	(F) MAXIMUM BUILDING AREA [4]
1	BUSINESS B	1,484	23,000	75%	0%	40,250	80,500
1	STORAGE S-1	1,682	17,500	75%	0%	30,625	61,250

OCCUPANCY S-1 IS THE MOST RESTRICTIVE AND CONTROLS.

1. FRONTAGE AREA INCREASES FROM SECTION 506.2 ARE COMPUTED THUS:
   A. PERIMETER WHICH FRONTS A PUBLIC WAY OR OPEN SPACE HAVING 20 FEET MINIMUM WIDTH = 328 FT
   B. TOTAL BUILDING PERIMETER = 328 FT (P)
   C. RATIO (F/P) = 328 / 328 = 1 (F/P)
   D. W = MINIMUM WIDTH OF PUBLIC WAY = 30 T (W)
   E. PERCENT OF FRONTAGE INCREASE I = 100 [328 / 328 - 0.25] x 30/30 = 75 (%)
2. UNLIMITED AREA APPLICABLE UNDER CONDITIONS OF SECTION 507.
3. MAXIMUM BUILDING AREA = TOTAL NUMBER OF STORIES IN BUILDING X D (MAXIMUM 2 STORIES) (504.4)
4. THE MAXIMUM AREA OF PARKING GARAGES MUST COMPLY WITH TABLE 406.5.4.
5. FRONTAGE INCREASE IS BASED ON THE UNSPRINKLERED AREA VALUE IN TABLE 506.2.

ALLOWABLE HEIGHT

		ALLOWABLE	SHOWN ON PLANS	CODE REFERENCE [1]
BLDG HEIGHT IN FEET	TABLE 504.3 [2]	55	16'	TABLE 504.3
BLDG HEIGHT IN STORIES	TABLE 504.4 [3]	2	1	TABLE 504.4

[1] PROVIDE CODE REFERENCE IF THE "SHOWN ON PLANS" QUANTITY IS NOT BASED ON TABLE 504.3 OR 504.4.
[2] THE MAXIMUM HEIGHT OF AIR TRAFFIC CONTROL TOWERS MUST COMPLY WITH TABLE 412.3.1.
[3] THE MAXIMUM HEIGHT OF OPEN PARKING GARAGES MUST COMPLY WITH TABLE 406.5.4.

FIRE PROTECTION REQUIREMENTS

BUILDING ELEMENT	FIRE SEPARATION DISTANCE (FEET)	RATING REQ'D	RATING PROVIDED (W/___* REDUCTION)	DETAIL # AND SHEET #	DESIGN # FOR RATED ASSEMBLIES	DESIGN # FOR RATED PENETRATION	DESIGN # FOR RATED JOINTS
STRUCTURAL FRAME, INCL. COLUMNS, GIRDERS, TRUSSES	OVER 30'	0	0				
BEARING WALLS							
EXTERIOR							
NORTH	OVER 30'	0	0				
EAST	OVER 30'	0	0				
WEST	OVER 30'	0	0				
SOUTH	OVER 30'	0	0				
INTERIOR							
NON-BEARING WALLS & PARTITIONS							
EXTERIOR		N/A					
NORTH	OVER 30'	N/A					
EAST	OVER 30'	N/A					
WEST	OVER 30'	N/A					
SOUTH	OVER 30'	N/A					
INTERIOR WALLS & PARTITIONS	N/A	N/A	N/A				
FLOOR CONSTRUCTION INCLUDING SUPPORTING BEAMS AND JOISTS	N/A	0					
FLOOR CEILING ASSEMBLY		0	0				
COLUMNS SUPPORTING FLOORS		0	0				
ROOF CONSTRUCTION INCLUDING SUPPORTING BEAMS AND JOISTS	N/A	0					
ROOF CEILING ASSEMBLY		N/A	0				
COLUMNS SUPPORTING ROOF		N/A	0				
SHAFT ENCLOSURES - EXIT		N/A	0				
SHAFT ENCLOSURES - OTHER		N/A	0				
CORRIDOR SEPARATION		N/A	0				
OCCUPANCY/FIRE BARRIER SEPARATION		N/A	0				
PARTY/FIRE WALL SEPARATION		N/A	0				
SMOKE BARRIER SEPARATION		N/A	0				
SMOKE PARTITION		N/A	0				
TENANT/DWELLING UNIT/SLEEPING UNIT SEPARATION		N/A	0				
INCIDENTAL USE SEPARATION		N/A	0				

* INDICATE SECTION NUMBER PERMITTING REDUCTION

PERCENTAGE OF WALL OPENING CALCULATIONS

FIRE SEP DISTANCE (FEET) FROM PROPERTY LINES	DEGREE OF OPENINGS PROTECTION (TABLE 705.8)	ALLOWABLE AREA (%)	ACTUAL SHOWN ON PLANS (%)
OVER 30'	NO LIMIT		

LIFE SAFETY SYSTEM REQUIREMENTS
EMERGENCY LIGHTING: ☐ NO ■ YES
EXIT SIGNS: ☐ NO ■ YES
FIRE ALARM: ■ NO ☐ YES
SMOKE DETECTION SYSTEMS: ■ NO ☐ YES ☐ PARTIAL
CARBON MONOXIDE DETECTION: ■ NO ☐ YES

LIFE SAFETY PLAN REQUIREMENTS
LIFE SAFETY PLAN SHEET # MF-G102

☐ FIRE AND/OR SMOKE WALL LOCATIONS (CHAPTER 7) **N/A**
☐ ASSUMED AND REAL PROPERTY LINE LOCATIONS (IF NOT ON THE SITE PLAN) **N/A**
☐ EXTERIOR WALL OPENING AREA WITH RESPECT TO DISTANCE TO ASSUMED PROPERTY LINES (705.8) **N/A**
■ OCCUPANCY USE FOR EACH AREA AS IT RELATES TO OCCUPANT LOAD CALCULATIONS (TABLE 1004.1.2)
■ OCCUPANT LOADS FOR EACH AREA
■ EXIT ACCESS TRAVEL DISTANCES (1017)
■ COMMON PATH OF TRAVEL DISTANCES (TABLES 1006.2.1 & 1006.3.2(1))
☐ DEAD END LENGTHS (1020.4) **N/A**
■ CLEAR EXIT WIDTHS FOR EACH EXIT DOOR
■ MAXIMUM CALCULATED OCCUPANT LOAD CAPACITY EACH EXIT DOOR CAN ACCOMMODATE BASED ON EGRESS WIDTH (1005.3)
■ ACTUAL OCCUPANT LOAD FOR EACH EXIT DOOR
☐ A SEPARATE SCHEMATIC PLAN INDICATING WHERE FIRE RATED FLOOR/CEILING AND /OR ROOF STRUCTURE IS PROVIDED FOR OCCUPANCY SEPARATION **N/A**

☐ LOCATION OF DOORS WITH PANIC HARDWARE (1010.1.10) **N/A**
☐ LOCATION OF DOORS WITH DELAYED EGRESS LOCKS AND THE AMOUNT OF DELAY (1010.1.9.7) **N/A**
☐ LOCATION OF DOORS WITH ELECTROMAGNETIC EGRESS LOCKS (1010.1.9.9) **N/A**
☐ LOCATION OF DOORS EQUIPPED WITH HOLD OPEN DEVICES **N/A**
☐ LOCATION OF EMERGENCY ESCAPE WINDOWS (1030) **N/A**
☐ THE SQUARE FOOTAGE OF EACH FIRE AREA (202) **N/A**
☐ THE SQUARE FOOTAGE OF EACH SMOKE COMPARTMENT FOR OCCUPANCY CLASSIFICATION I-2 (407.5) **N/A**
☐ NOTE ANY CODE EXCEPTIONS OR TABLE NOTES THAT MAY HAVE BEEN UTILIZED REGARDING THE ITEMS ABOVE **NONE**

~~ACCESSIBLE DWELLING UNITS (SECTION 1107)~~ N/A

TOTAL UNITS	ACCESSIBLE UNITS REQUIRED	ACCESSIBLE UNITS PROVIDED	TYPE A UNITS REQUIRED	TYPE A UNITS PROVIDED	TYPE B UNITS REQUIRED	TYPE B UNITS REQUIRED	TOTAL - ACCESSIBLE UNITS PROVIDED

ACCESSIBLE PARKING (SECTION 1106) - SEE COVER SHEET OF EASTERN PARCEL SITE DRAWING SET.

LOT OR PARKING AREA	TOTAL # PARKING REQUIRED	TOTAL # PARKING PROVIDED	# OF ACCESSIBLE SPACES PROVIDED: REGULAR W/ 5' ACCESS AISLE	VAN SPACE WITH 132" ACC. AISLE	VAN SPACE WITH 8' ACC. AISLE	TOTAL # ACCESSIBLE UNITS PROVIDED
PARK CENTER	24	103 STANDARD SPACES	8 ACCESSIBLE SPACES		2	10 ACCESSIBLE SPACES
MAINTENANCE FAC.	6					
PICNIC SHELTER	8					
PLAYGROUND	34					
BOATING	4					
FISHING	4					
TOTAL	80	103	8		2	10

PARKING SPACES LISTED HERE INCLUDES ALL STANDARD VEHICLE SPACES REQUIRED AND PROVIDED FOR THE EASTERN PARCEL. SEE SHEET COVERSHEET OF EASTERN PARCEL SITE DRAWING SET FOR ADDITIONAL PARKING INFO.

PLUMBING FIXTURE REQUIREMENTS (TABLE 2902.1) MAINTENANCE FACILITY ONLY.

USE	WATER CLOSETS MALE	WATER CLOSETS FEMALE	WATER CLOSETS UNISEX	URINALS	LAVATORIES MALE	LAVATORIES FEMALE	LAVATORIES UNISEX	SHOWERS & TUBS MALE	SHOWERS & TUBS FEMALE	DRINKING FOUNTAINS REGULAR	DRINKING FOUNTAINS ACCESSIBLE
REQUIRED	0	0	1	0	0	0	1	0	0	1	1
PROVIDED	0	0	1	0	0	0	1	0	0	2	1

BUILDING OCCUPANT LOAD IS LESS THAN 25 (INCLUDING STAFF AND VISITORS), THEREFORE SEPARATE FACILITIES ARE NOT REQUIRED.

SPECIAL APPROVALS
LOCAL JURISDICTION, DEPARTMENT OF INSURANCE, OSC, DPI, DHHS, ETC., DESCRIBE BELOW.

ENERGY SUMMARY

ENERGY REQUIREMENTS:

THE FOLLOWING DATA SHALL BE CONSIDERED MINIMUM AND ANY SPECIAL ATTRIBUTE REQUIRED TO MEET THE ENERGY CODE SHALL ALSO BE PROVIDED. EACH DESIGNER SHALL FURNISH THE REQUIRED PORTIONS OF THE PROJECT INFORMATION FOR THE PLAN DATA SHEET. IF PERFORMANCE METHOD, STATE THE ANNUAL ENERGY COST FOR THE STANDARD REFERENCE DESIGN VS. ANNUAL ENERGY FOR THE PROPOSED DESIGN.

EXISTING BUILDING ENVELOPE COMPLIES WITH CODE: ☐ YES (REMAINDER OF THIS SECTION IS NOT APPLICABLE) ☐ NO
EXEMPT BUILDING: ☐ YES ■ NO PROVIDE CODE OR STATUTORY REFERENCE:
CLIMATE ZONE: ☐ N/A ☐ 3A ■ 4A ☐ 5A
METHOD COMPLIANCE: ☐ ENERGY CODE PERFORMANCE ■ ENERGY CODE PRESCRIPTIVE ☐ OTHER - PERFORMANCE
☐ ASHRAE 90.1 PERFORMANCE ☐ ASHRAE 90.1 PRESCRIPTIVE ☐
(IF "OTHER" SPECIFY SOURCE HERE)

THERMAL ENVELOPE (PRESCRIPTIVE METHOD ONLY)
ROOF/CEILING ASSEMBLY - STANDING SEAM
DESCRIPTION OF ASSEMBLY: SEE MF-A421 THROUGH MF-A422: STANDING SEAM ROOF / MIN. R-30 CONTINUOUS RIGID INSULATION / NOMINAL 2" WOOD DECK
U-VALUE OF TOTAL ASSEMBLY: U-0.02
R-VALUE OF INSULATION: MIN. R-30 CONTINUOUS INSULATION, R-43 SHOWN IN DETAILS
SKYLIGHTS IN EACH ASSEMBLY: N/A
U-VALUE OF SKYLIGHT: N/A
SKYLIGHTS AREA IN EACH ASSEMBLY: N/A

EXTERIOR WALLS - FIBER CEMENT CLADDING
DESCRIPTION OF ASSEMBLY: SEE MF-A421 THROUGH MF-A422: 8" METAL STUDS W/ MIN. R-19 BATT INSULATION / 5/8" SHEATHING / AIR-WEATHER BARRIER / MIN. R-10 CONT. RIGID INSULATION / AIRSPACE / FIBER CEMENT CLADDING
U-VALUE OF TOTAL ASSEMBLY: U-0.037
R-VALUE OF INSULATION: MIN R-19 + R-10 CONTINUOUS INSULATION, R-19 + R-15CI SHOWN IN DETAILS
OPENINGS (WINDOWS & DOORS):
U-VALUE OF ASSEMBLY: U-0.45
SOLAR HEAT GAIN COEF: 0.25
PROJECTION FACTOR: 0.00
DOOR R-VALUES: ALUMINUM ENTRANCE - R-1.3 / HOLLOW METAL - R-2.0

WALLS ADJACENT TO UNCONDITIONED SPACE (EACH ASSEMBLY):
DESCRIPTION OF ASSEMBLY: N/A
U-VALUE OF TOTAL ASSEMBLY:
R-VALUE OF INSULATION:
OPENINGS (WINDOWS & DOORS):
U-VALUE OF ASSEMBLY: N/A
SOLAR HEAT GAIN COEF:
PROJECTION FACTOR:
DOOR R-VALUES:

WALLS BELOW GRADE:
DESCRIPTION OF ASSEMBLY: N/A
U-VALUE OF TOTAL ASSEMBLY:
R-VALUE OF INSULATION:

FLOORS - UNCONDITIONED:
DESCRIPTION OF ASSEMBLY: N/A
U-VALUE OF TOTAL ASSEMBLY:
R-VALUE OF INSULATION:

FLOOR SLAB ON GRADE:
DESCRIPTION OF ASSEMBLY: SEE MF-A421 THROUGH MF-A422: 4" OR 6" CONCRETE ON A VAPOR BARRIER ON DRAINAGE STONE ON GRADE
U-VALUE OF TOTAL ASSEMBLY:
R-VALUE OF INSULATION: R-15 CONTINUOUS INSULATION
HORIZONTAL/VERTICAL REQMT: VERTICAL TO TOP OF FOOTING AT WALLS / 2'-0" HORIZONTAL AT ENTRANCES AND DOORS
SLAB HEATED: N/A

STRUCTURAL DESIGN
DESIGN LOADS:
IMPORTANCE FACTORS: SNOW (Is): ☐ 0.8 ■ 1.0 ☐ 1.1 ☐ 1.2
SEISMIC (Ie): ■ 1.0 ☐ 1.25 ☐ 1.5
LIVE LOADS: ROOF 20 PSF
MEZZANINE N/A PSF
FLOOR 100 PSF
GROUND SNOW LOAD: 15 PSF
WIND LOAD: ULTIMATE WIND SPEED 116 MPH (ASCE-7)
EXPOSURE CATEGORY ☐ N/A ■ B ☐ C ☐ D

SEISMIC DESIGN CATEGORY: ☐ N/A ■ A ☐ B ☐ C ☐ D
PROVIDE THE FOLLOWING SEISMIC PARAMETERS:
RISK FACTOR (TABLE 1604.5): ☐ N/A ☐ I ■ II ☐ III ☐ IV
SPECIAL RESPONSE ACCELERATION: S_S 11.2 %g S_1 5.7 %g

SITE CLASSIFICATION (ASCE 7): ☐ N/A ☐ A ☐ B ■ C ☐ D ☐ E ☐ F
DATA SOURCE: ☐ N/A ■ FIELD TEST ☐ PRESUMPTIVE ☐ HISTORICAL DATA
BASIC STRUCTURAL SYSTEM: ☐ N/A ☐ BEARING WALL ☐ BLDG FRAME ■ MOMENT FRAME
☐ DUAL W/ SPECIAL MOMENT FRAME ☐ INVERTED PENDULUM
☐ DUAL W/ INTERMEDIATE R/C OR SPECIAL STEEL
ANALYSIS PROCEDURE: ☐ N/A ☐ SIMPLIFIED ■ EQUIVALENT LATERAL FORCE ☐ DYNAMIC
ARCHITECTURAL, MECHANICAL, COMPONENTS ANCHORED: ☐ N/A ☐ YES ■ NO
LATERAL DESIGN CONTROL: ☐ N/A ☐ EARTHQUAKE ■ WIND
SOIL BEARING CAPACITIES: 2,500 PSF

PILE SIZE, TYPE & CAPACITY N/A

MECHANICAL DESIGN SEE MECHANICAL DRAWINGS
MECHANICAL SUMMARY: MECHANICAL SYSTEMS, SERVICE SYSTEMS AND EQUIPMENT
METHOD OF COMPLIANCE: ■ PERSCRIPTIVE ☐ ENERGY COST BUDGET

THERMAL ZONE: 4A WINTER DRY BULB: 19.7 DEGREES F
SUMMER DRY BULB: 95 DEGREES F

INTERIOR DESIGN COND: WINTER DRY BULB: 68 DEGREES F
SUMMER DRY BULB: 75 DEGREES F
RELATIVE HUMIDITY: 50 DEGREES F

BUILDING HEATING LOAD: 15.84 MBH
BUILDING COOLING LOAD: 2.34 TONS

MECHANICAL SPACING CONDITIONING SYSTEM
UNITARY:
DESCRIPTION OF UNIT: SPLIT SYSTEM HEAT PUMPS AND ELECTRIC UNIT HEATERS
HEATING EFFICIENCY: SEE SCHEDULES ON M SHEETS
COOLING EFFICIENCY: SEE SCHEDULES ON M SHEETS
SIZE CATEGORY OF UNIT: SEE SCHEDULES ON M SHEETS
BOILER: SIZE CATEGORY: N/A IF OVERSIZED STATE REASON
CHILLER: SIZE CATEGORY: N/A IF OVERSIZED STATE REASON
LIST EQUIPMENT EFFICIENCIES: SEE M SHEETS

ELECTRICAL DESIGN SEE ELECTRICAL DRAWINGS
ELECTRICAL SYSTEMS AND EQUIPMENT

METHOD OF COMPLIANCE: ☐ ENERGY CODE PERFORMANCE ■ ENERGY CODE PRESCRIPTIVE ☐ N/A
☐ ASHRAE 90.1 PERFORMANCE ☐ ASHRAE 90.1 PRESCRIPTIVE

LIGHTING SCHEDULE:

LAMP TYPE REQUIRED IN FIXTURE	SEE FIXTURE SCHEDULE ON E SHEETS
NUMBER OF LAMPS IN FIXTURE	SEE FIXTURE SCHEDULE ON E SHEETS
BALLAST TYPE USED IN THE FIXTURE	SEE SPECIFICATIONS
NUMBER OF BALLASTS IN THE FIXTURE	SEE SPECIFICATIONS
TOTAL WATTAGE PER FIXTURE	VARIES - SEE FIXTURE SCHEDULE ON E SHEETS
TOTAL INTERIOR WATTAGE SPECIFIED VS. ALLOWED (WHOLE BUILDING OR SPACE BY SPACE)	684 WATTS VS. 3962 WATTS (WHOLE BUILDING)
TOTAL EXTERIOR WATTAGE SPECIFIED VS. ALLOWED	197 WATTS VS 1014 WATTS

ADDITIONAL EFFICIENCY PACKAGE OPTIONS: (WHEN USING 2018 NCECC; NOT REQUIRED FOR ASHRAE 90.1)
☐ C406.2 MORE EFFICIENT HVAC EQUIPMENT PERFORMANCE
■ C406.3 REDUCED LIGHTING POWER DENSITY
☐ C406.4 ENHANCED DIGITAL LIGHTING CONTROLS
☐ C406.5 ON-SITE RENEWABLE ENERGY
☐ C406.6 DEDICATED OUTDOOR AIR SYSTEM
☐ C406.7 REDUCED ENERGY USE IN SERVICE WATER HEATING

Susan Hatchell Landscape Architecture, PLLC
711 W. North Street, Raleigh, NC 27603
p: 919-838-9600 f: 919-838-9700

Esse Architects
630 PERSHING ROAD | RALEIGH, NORTH CAROLINA 27608

CODE SUMMARY

LAKE MYRA COUNTY PARK
Wake County, NC

Esse Architects P.A. Registered Architectural Corporation 52498 North Carolina Raleigh, NC

MIRANDA DONNER POTTHOFF Registered Architect 11663 Miranda Potthoff NORTH CAROLINA 7/27/2026 Raleigh, NC

REVISIONS

Date: 07/27/26

MF-G101

Docusign Envelope ID: CA5E972F-88DE-84DD-82F4-6DC4C04FE625

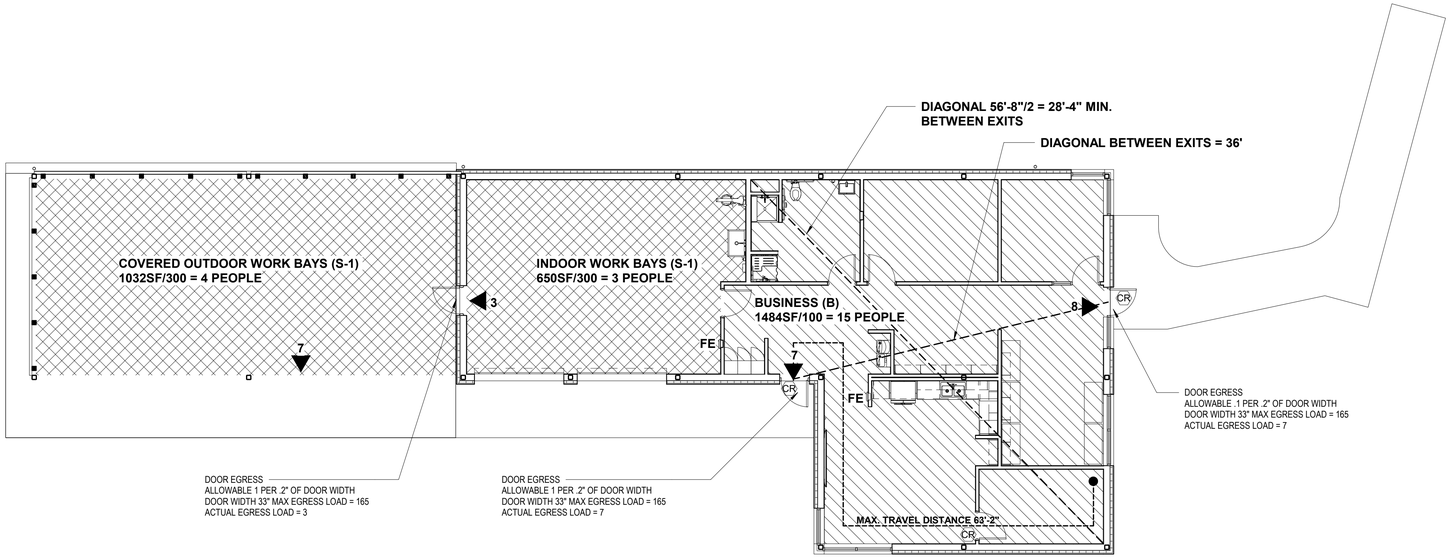

TOTAL BUILDING OCCUPANT LOAD = 22
SEPARATE RESTROOM FACILITIES ARE NOT REQUIRED.

1 MF-G102 MAINTENANCE FACILITY LIFE SAFETY PLAN
1/8" = 1'-0"

LIFE SAFETY PLAN LEGEND AND NOTES

═══	UNRATED CONSTRUCTION
## ▶	OCCUPANTS EGRESSING
CR	DOORS WITH CARD READERS (FREE EGRESS)
FE	SEMI RECESSED FIRE EXTINGUISHER CABINET

AREA SCHEDULE

NAME	AREA	LOAD FACTOR	OCCUPANTS
BUSINESS (B)			
STAFF AREAS	1484 SF	100	15
STORAGE (S-1)			
INDOOR WORK BAY	650 SF	300	3
OUTDOOR WORK BAYS	1032 SF	300	4

NOTES

1. SEE ELECTRICAL DRAWINGS FOR EXIT SIGN LOCATIONS.

BUSINESS (B)
STORAGE (S-1)

FIRE AREAS

FIRE AREA 1 3,166 SF
THERE IS ONLY ONE FIRE AREA.

Susan Hatchell
Landscape Architecture, PLLC
711 W. North Street, Raleigh, NC 27603
p: 919-838-9600 f: 919-838-9700

Esse Architects
632 PERSHING ROAD | RALEIGH, NORTH CAROLINA 27608

LIFE SAFETY PLAN

LAKE MYRA COUNTY PARK
Wake County, NC

REVISIONS

Esse Architects P.A.
Registered Architectural Corporation
52498
North Carolina
Raleigh, NC

MIRANDA DOWNER POTTHOFF
Registered Architect
11663
Miranda Potthoff
North Carolina
Raleigh, NC
7/27/2026

Date: 07/27/26

MF-G102

Docusign Envelope ID: 64A88F3C-582E-8A95-8091-A28AA91D843E

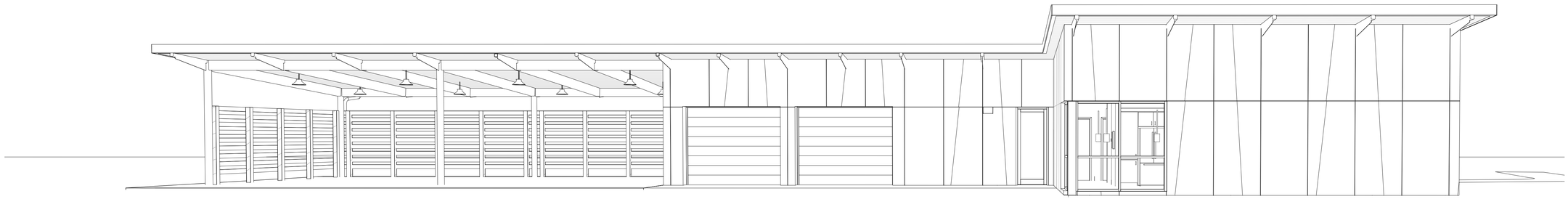

1 MF-A000 MAINTENANCE FACILITY - FRONT VIEW

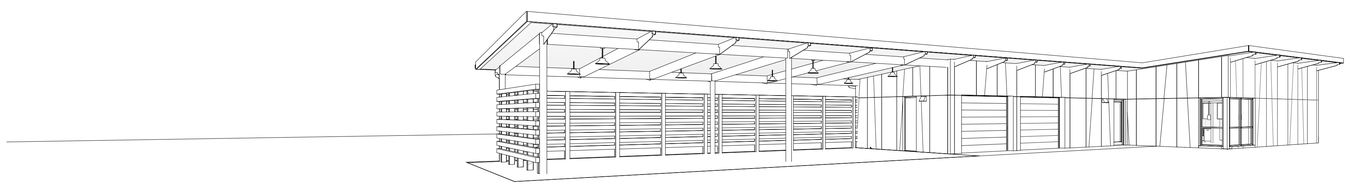

2 MF-A000 MAINTENANCE FACILITY - ENTRY VIEW

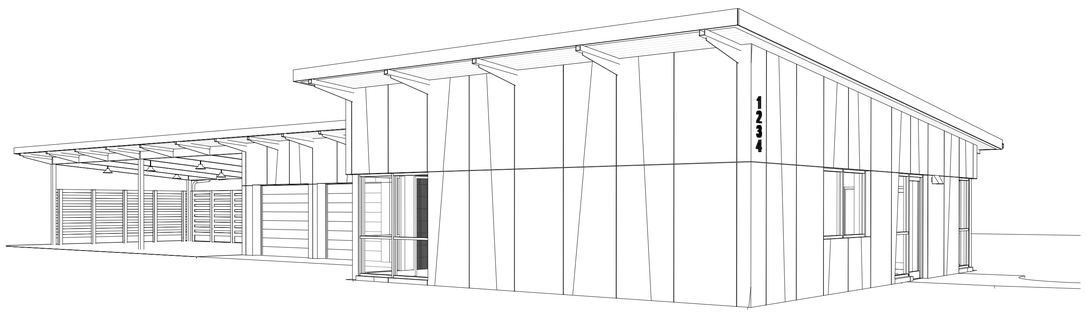

3 MF-A000 MAINTENANCE FACILITY - APPROACH

Susan Hatchell
Landscape Architecture, PLLC
711 W. North Street, Raleigh, NC 27603
p: 919-838-9600 f: 919-838-9700

Esse Architects
630 PERSHING ROAD | RALEIGH, NORTH CAROLINA 27608

3D VIEWS

LAKE MYRA COUNTY PARK
Wake County, NC

REVISIONS

Esse Architects P.A.
Registered Architectural Corporation
52498
North Carolina
Raleigh, NC

MIRANDA DONNER ROTTHOFF
Registered Architect
11663
Signed by:
Miranda Rotthoff
7/27/2026
Raleigh, NC

Date: 07/27/26

MF-A000

Docusign Envelope ID: 64A88F3C-582E-8A95-8091-A28AA91D843E

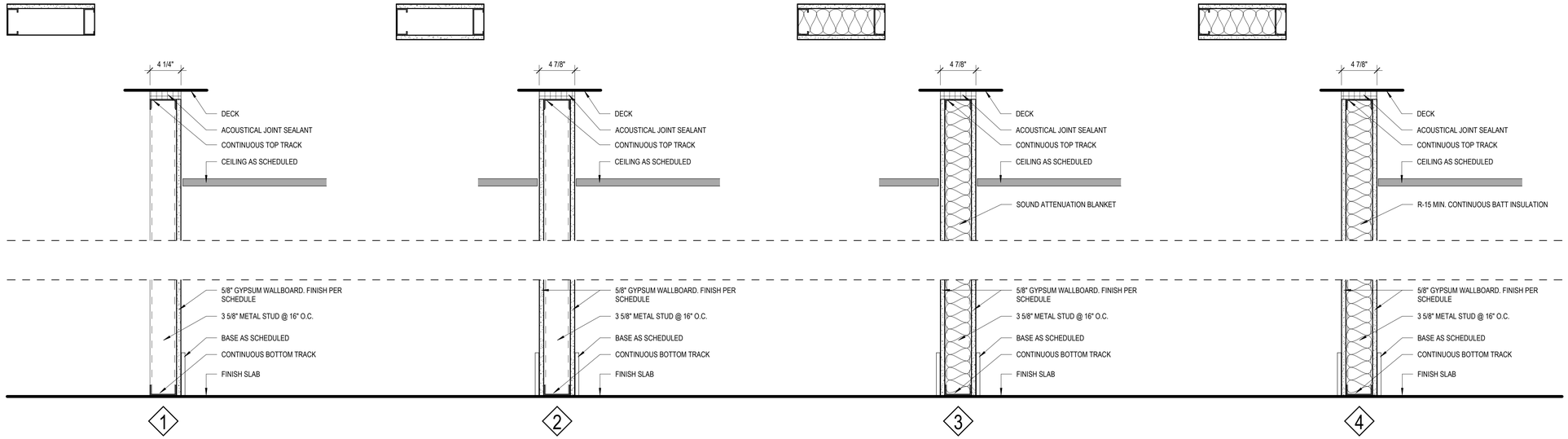

3 5/8" METAL STUD PARTITION, 5/8" GWB. ONE SIDE

3 5/8" METAL STUD PARTITION, 5/8" GWB. EACH SIDE

3 5/8" METAL STUD PARTITION, 5/8" GWB. EACH SIDE

3 5/8" METAL STUD PARTITION, 5/8" GWB. EACH SIDE
R-13 MIN. CONTINUOUS BATT INSULATION

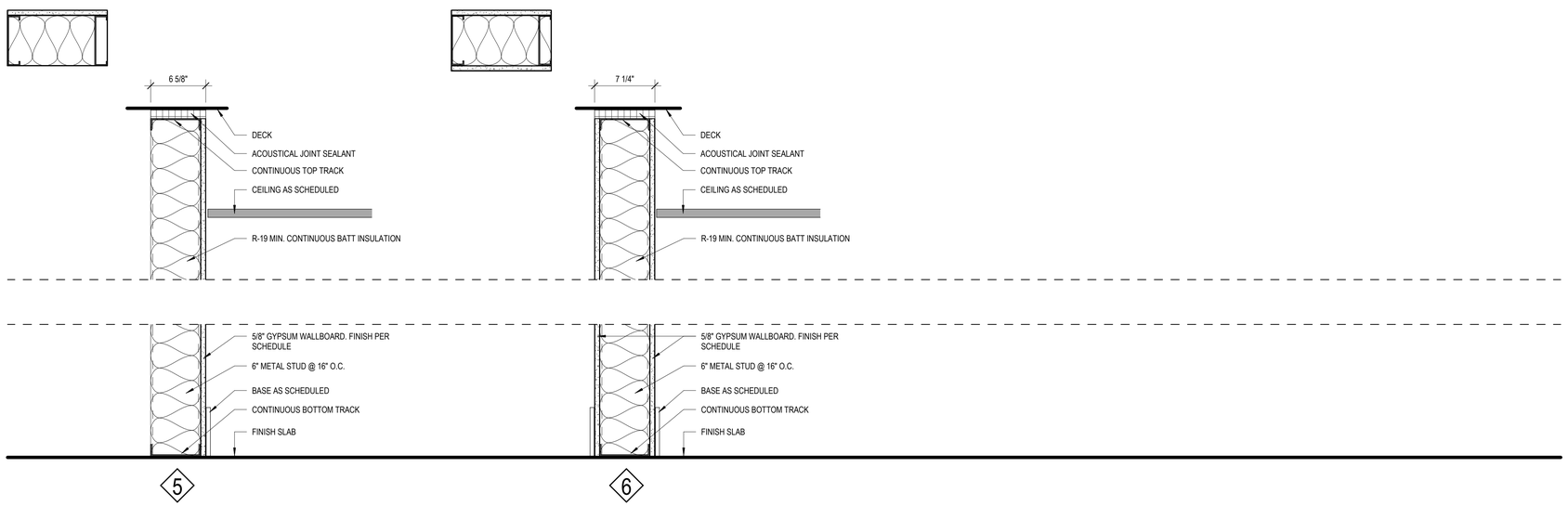

6" METAL STUD PARTITION, 5/8" GWB. ONE SIDE
R-19 MIN. CONTINUOUS BATT INSULATION

6" METAL STUD PARTITION, 5/8" GWB. EACH SIDE
R-19 MIN. CONTINUOUS BATT INSULATION

SYMBOL LEGEND

#	PARTITION TAG

GENERAL PARTITION NOTES

1. ALL RATED WALLS ARE TO BE STENCIL PAINTED IN RED AS FOLLOWS:
   "1-HOUR RATED WALL
   SMOKE BARRIER; SEAL ALL PENETRATIONS"
   WITH THE APPLICABLE RATING NOTED, PER PLANS. LETTERS TO BE 6" HIGH. STENCILS TO BE 12" ABOVE CEILING AND SPACED AT 48" O.C. MAX. BOTH SIDES OF WALL.
2. COORDINATE ADJACENT WALLS OF DIFFERENT TYPES SO THAT GYP. BOARD WALL FACES ALIGN. RESILIENT CHANNELS TO BE ON THE SAME SIDE OF THE WALL, TYP.
3. ALL INTERIOR PARTITIONS TO BE TYPE "**3**", U.N.O.
4. SEAL PERIMETER OF ALL WALLS, TYP.
5. PROVIDE FIRE SEALANT AT BASE, PENETRATIONS, AND TOP OF ALL WALLS REQUIRING FIRE RATING.
6. USE 5/8" CEMENTITIOUS TILE BACKING SHEETS IN LIEU OF 5/8" GWB BEHIND ALL WALL TILE; TYP.
7. SEE FINISH SCHEDULE AND FINISH PLANS FOR WALL TILE AND WALL FINISHES.
8. ALL RATED WALLS TO BE CONTINUOUS SYSTEMS. G.C. TO COORDINATE CORRECT SEQUENCING OF RATED WALL CONSTRUCTION.

Susan Hatchell
Landscape Architecture, PLLC
711 W. North Street, Raleigh, NC 27603
p: 919-838-9600 f: 919-838-9700

Esse Architects
832 PERSHING ROAD | RALEIGH, NORTH CAROLINA 27608

PARTITIONS

LAKE MYRA COUNTY PARK
Wake County, NC

REVISIONS

Esse Architects P.A. Registered Architectural Corporation 52498 North Carolina Raleigh, NC

MIRANDA DONNER ROTHOFF Registered Architect 17663 North Carolina Raleigh, NC
Miranda Rothoff
7/27/2026

Date: 07/27/26

MF-A001

Docusign Envelope ID: 64A88F3C-582E-8A95-8091-A28AA91D843E

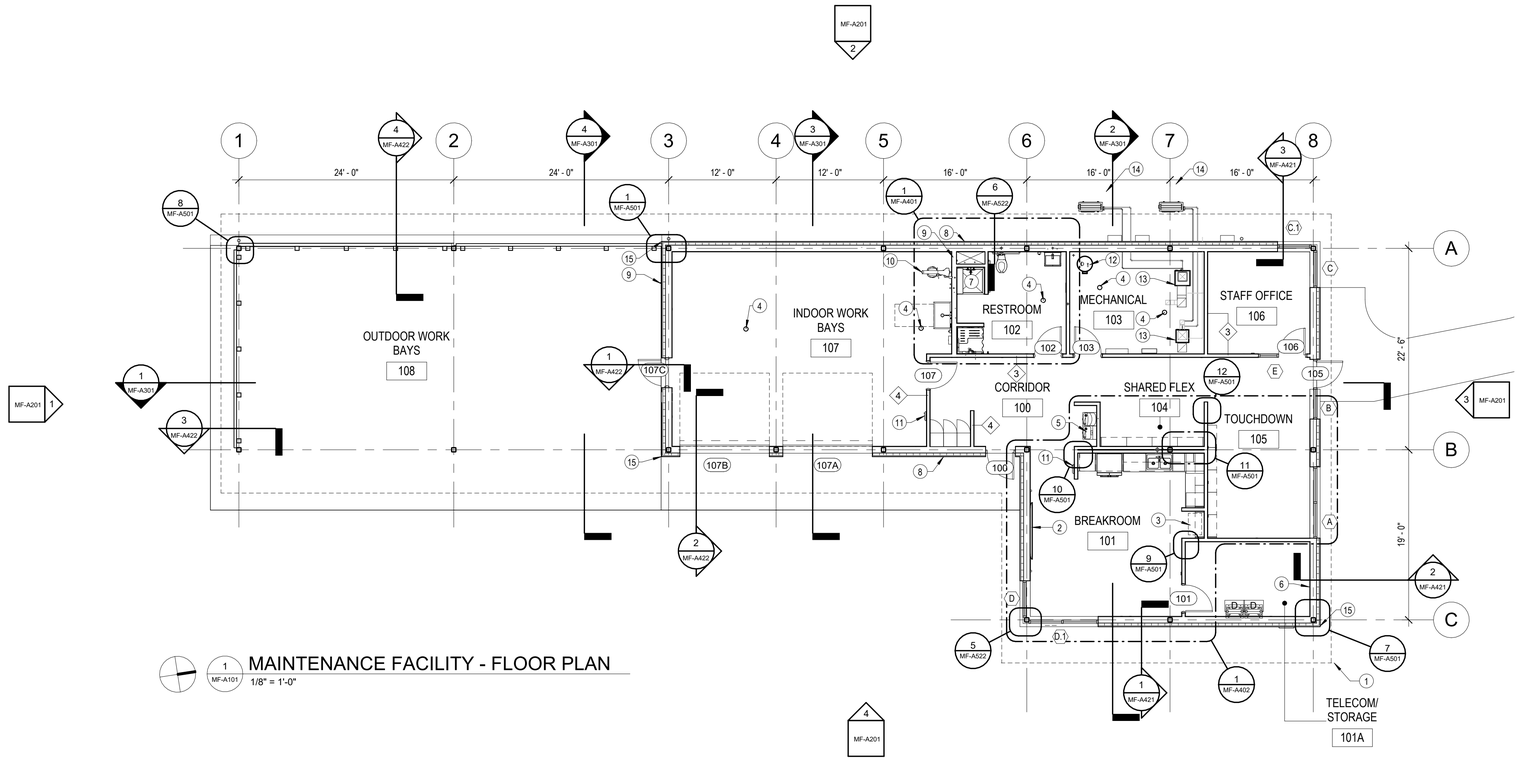

1 MF-A101 MAINTENANCE FACILITY - FLOOR PLAN
1/8" = 1'-0"

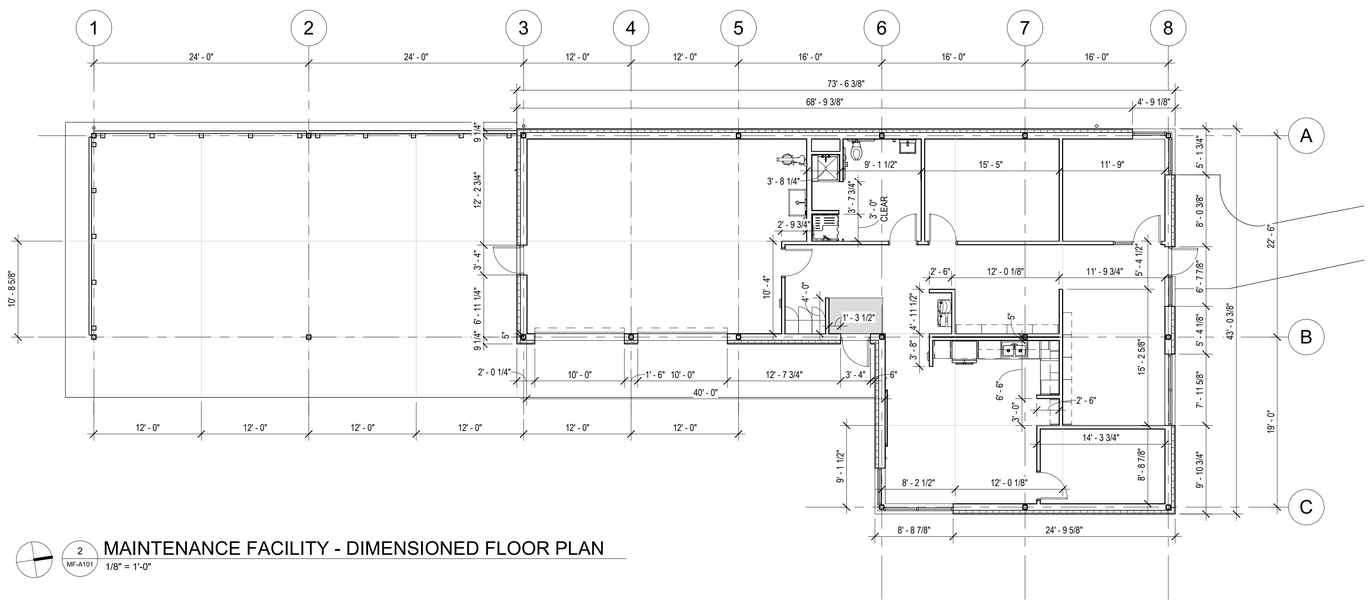

2 MF-A101 MAINTENANCE FACILITY - DIMENSIONED FLOOR PLAN
1/8" = 1'-0"

WALL LEGEND

UNRATED CONSTRUCTION

PARTITION TAG

NOTES

1. DIMENSIONS ARE TO CENTERLINE OF COLUMN LINES, FACE OF INTERIOR STUDS AND FACE OF EXTERIOR WALL SHEATHING, UNLESS NOTED OTHERWISE.
2. COORDINATE AND PROVIDE BACKING/BLOCKING FOR MILLWORK AND ITEMS ATTACHED OR MOUNTED TO WALLS OR CEILINGS.
3. LOCATE DOOR OPENINGS 4" OFF PERPENDICULAR WALL, U.O.N.
4. SEE DIMENSION PLAN FOR SLAB CONTROL JOINT LOCATIONS DEPICTED BY HALFTONE LINE.
5. SEE PLAN FOR SLAB CONTROL JOINT LOCATIONS DEPICTED BY HALFTONE LINES.
6. FINISH WALL TO FLOOR FOR BASE ADHESION.
7. SEE ENLARGED PLANS FOR ADDITIONAL DETAIL LOCATIONS.

GENERAL KEY NOTES

KEY	DESCRIPTION
1	ROOF OVERHANG ABOVE
2	AV/DATA WALL
3	COPIER LOCATION - COPIER TO BE OWNER PROVIDED
4	FLOOR DRAIN - SEE PLUMBING DRAWINGS
5	DRINKING FOUNTAIN - SEE PLUMBING DRAWINGS
6	INSTALL 3/4" FIRE RESISTANT PLYWOOD ON INDICATED WALL. RUN FROM BASE TO CLG.
7	MOP SINK - SEE PLUMBING DRAWINGS
8	WALL HYDRANT - SEE PLUMBING DRAWINGS
9	HOSE BIBB - SEE PLUMBING - CONFIRM LOCATION WITH OWNER
10	EMERGENCY EYEWASH - SEE PLUMBING DRAWINGS
11	FIRE EXTINGUISHER CABINET
12	ELECTRIC WATER HEATER - SEE PLUMBING DRAWINGS
13	AIR HANDLING UNIT - SEE MECHANICAL DRAWINGS
14	CONDENSING UNIT WITH CONCRETE HOUSEKEEPING PAD - SEE MECHANICAL DRAWINGS
15	CONTINUOUS POWDER COATED VERTICAL ALUMINUM TRIM

Susan Hatchell
Landscape Architecture, PLLC
711 W. North Street, Raleigh, NC 27603
p: 919-838-9600 f: 919-838-9700

Esse Architects
620 PERSHING ROAD | RALEIGH, NORTH CAROLINA 27608

FLOOR PLAN & DIMENSIONED PLAN

LAKE MYRA COUNTY PARK
Wake County, NC

REVISIONS

Esse Architects P.A. Registered Architectural Corporation 52498 North Carolina Raleigh, NC

MIRANDA DONNER POTTHOFF Registered Architect 11663 Signature Miranda Potthoff IEC04548BF2848E North Carolina Raleigh, NC 7/27/2026

Date: 07/27/26

MF-A101

Docusign Envelope ID: 64A88F3C-582E-8A95-8091-A28AA91D843E

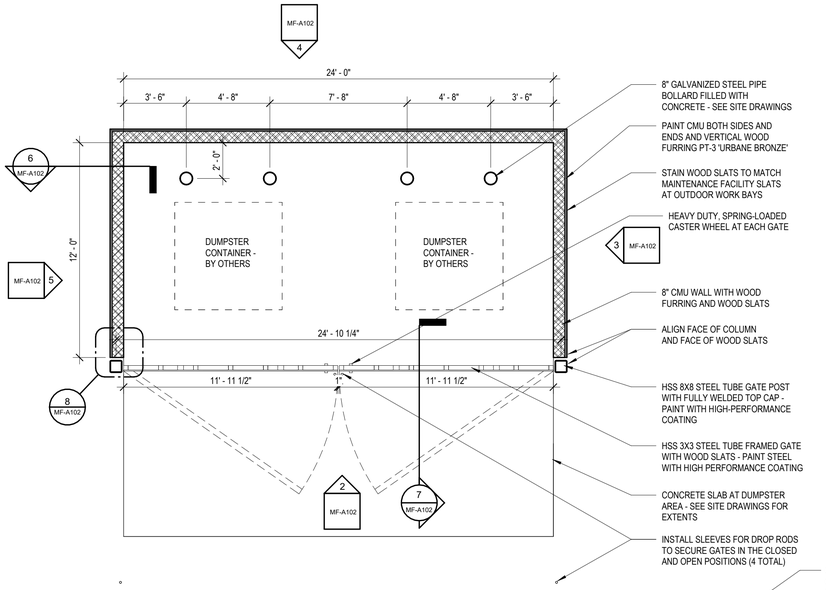

1 MF-A102 DUMPSTER ENCLOSURE - FLOOR PLAN
1/4" = 1'-0"

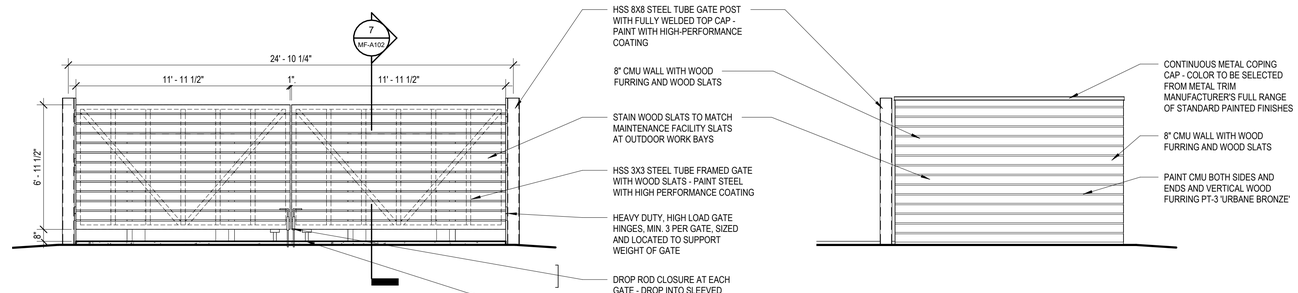

2 MF-A102 DUMPSTER ENCLOSURE - SOUTH ELEVATION
1/4" = 1'-0"

3 MF-A102 DUMPSTER ENCLOSURE - EAST ELEVATION
1/4" = 1'-0"

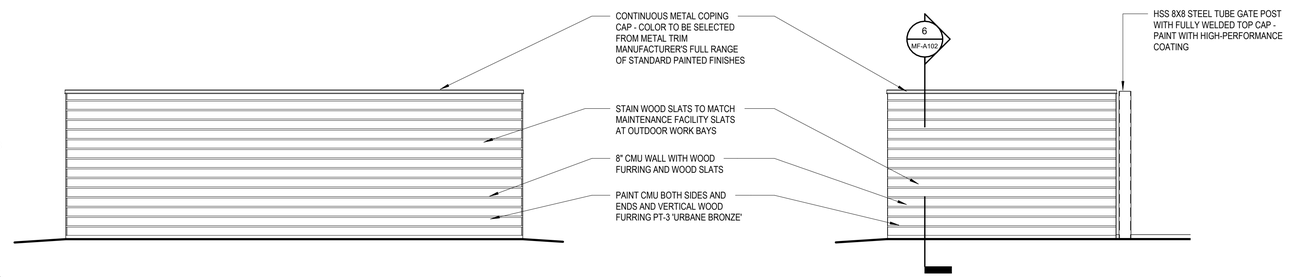

4 MF-A102 DUMPSTER ENCLOSURE - NORTH ELEVATION
1/4" = 1'-0"

5 MF-A102 DUMPSTER ENCLOSURE - WEST ELEVATION
1/4" = 1'-0"

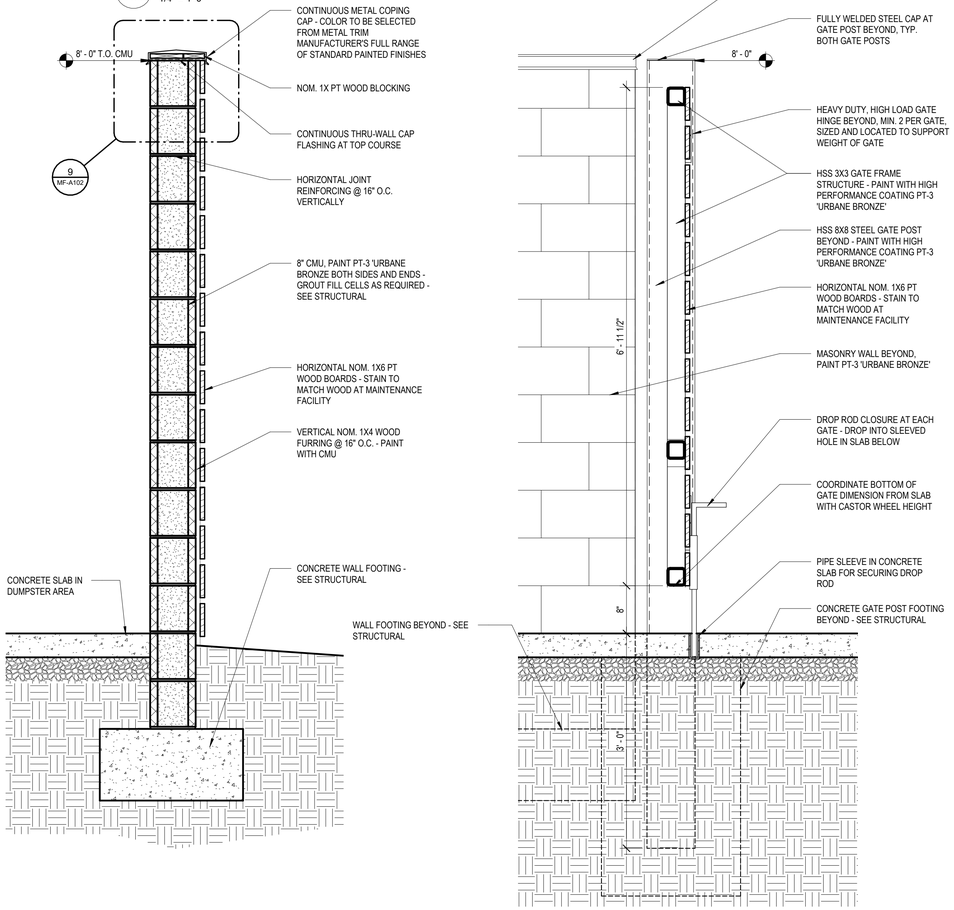

6 MF-A102 WALL SECTION @ DUMPSTER ENCLOSURE
1" = 1'-0"

7 MF-A102 SECTION @ DUMPSTER GATE
1" = 1'-0"

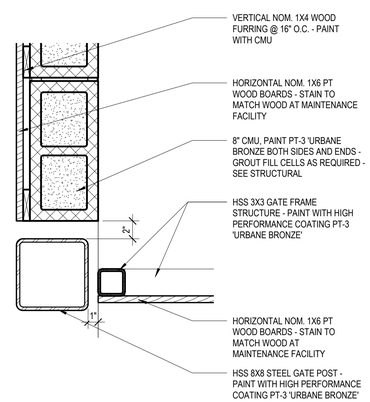

8 MF-A102 PLAN DETAIL @ DUMPSTER ENCLOSURE
1 1/2" = 1'-0"

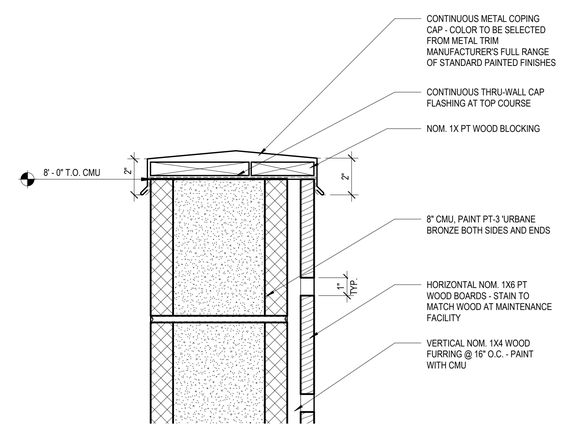

9 MF-A102 DETAIL @ DUMPSTER ENCLOSURE COPING
3" = 1'-0"

Susan Hatchell
Landscape Architecture, PLLC
711 W. North Street, Raleigh, NC 27603
p: 919-838-9600 f: 919-838-9700

Esse Architects
830 PERSHING ROAD | RALEIGH, NORTH CAROLINA 27608

DUMPSTER ENCLOSURE PLANS AND DETAILS

LAKE MYRA COUNTY PARK
Wake County, NC

REVISIONS

Esse Architects P.A. Registered Architectural Corporation 52498 North Carolina Raleigh, NC

MIRANDA DOWNER POTTHOFF Registered Architect 17663 Signature Miranda Potthoff Date 7/27/2026 North Carolina Raleigh, NC

Date: 07/27/26

MF-A102

Docusign Envelope ID: 64A88F3C-582E-8A95-8091-A28AA91D843E

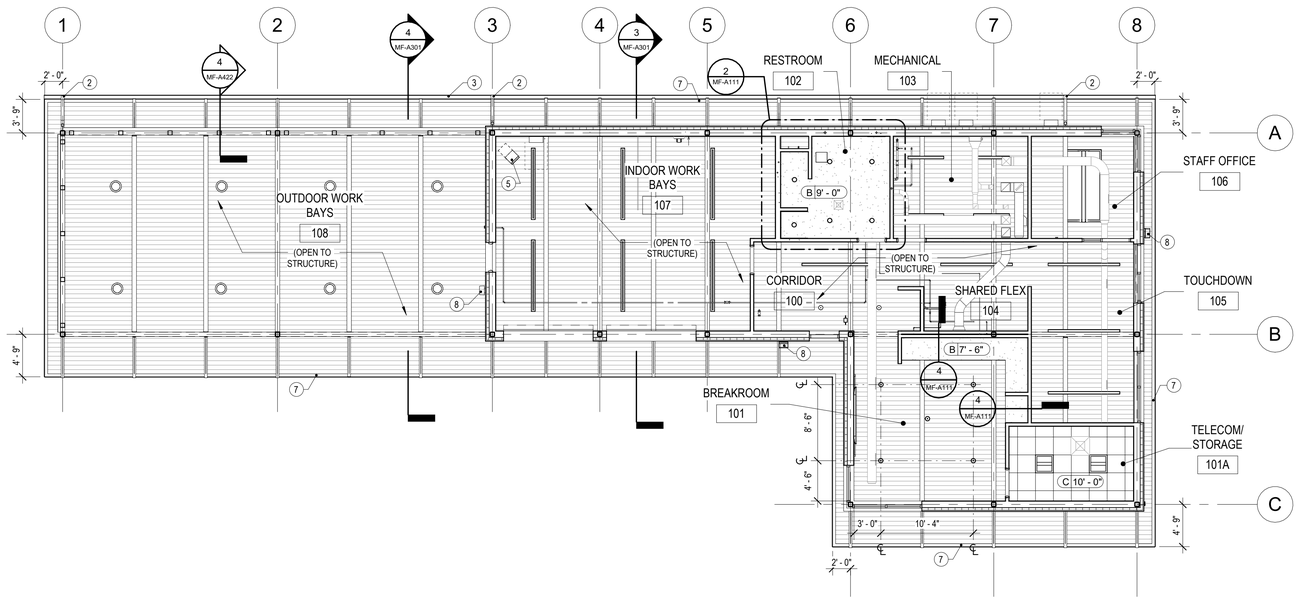

1 MF-A111 MAINTENANCE FACILITY - REFLECTED CEILING PLAN
1/8" = 1'-0"

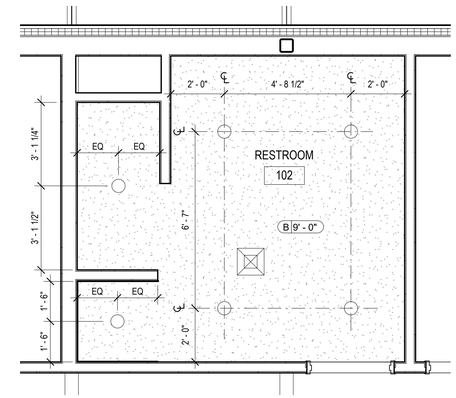

2 MF-A111 RESTROOM (102) - ENLARGED CEILING PLANS
3/8" = 1'-0"

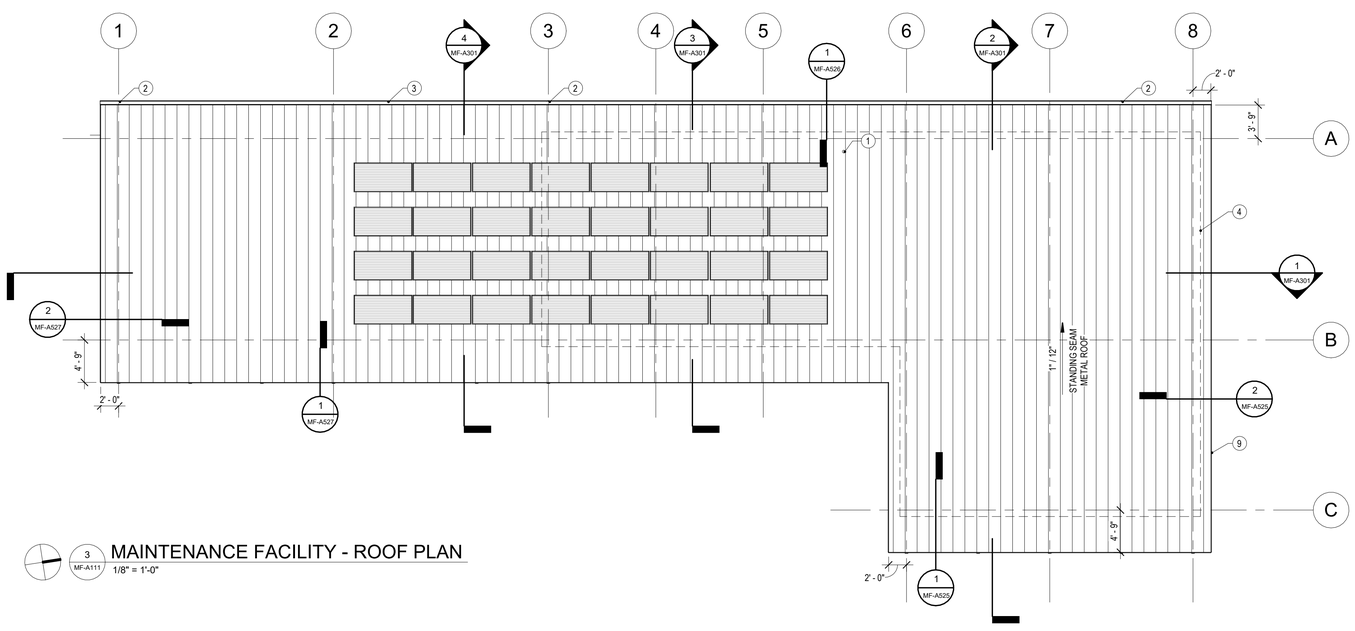

3 MF-A111 MAINTENANCE FACILITY - ROOF PLAN
1/8" = 1'-0"

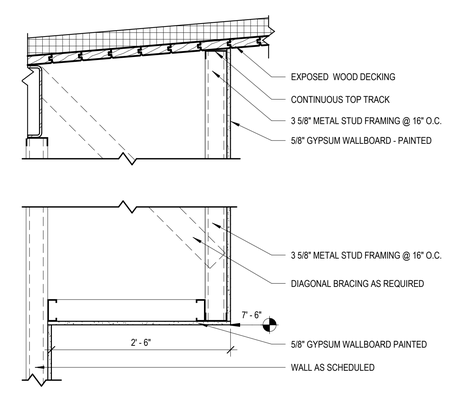

4 MF-A111 TYP. SOFFIT @ CASEWORK
1" = 1'-0"

CEILING LEGEND

CEILING TYPE — A 10'-0" — CEILING HEIGHT

PATTERN	KEY	CEILING MATERIAL
	A	2X6 EXPOSED WOOD DECKING
	B	GYPSUM BOARD; **PT-1**
	C	2X2 ACOUSTIC CEILING TILES

SYMBOL	DESCRIPTION
	ACOUSTICAL LINEAR DIRECT SUSPENDED FIXTURE
	LINEAR RECESSED OR PENDANT LIGHT FIXTURE
	PENDANT CAN LIGHT
	PENDANT CAN LIGHT
	ACOUSTICAL BAFFLE PENDANT LIGHT
	EMERGENCY LIGHT
	FIRE ALARM AUDIO VISUAL
	FIRE ALARM VISUAL
	EXIT SIGN
	AIR SUPPLY
	AIR RETURN

CEILING NOTES:

1. SEE ELECTRICAL AND MECHANICAL PLANS FOR MORE INFORMATION.
2. WHERE CEILING KEYNOTE IS NOT NOTED, ROOM HAS EXPOSED STRUCTURE.
3. CENTER CEILING GRID IN ROOM UNLESS SHOWN OTHERWISE. CENTER LIGHTS AS INDICATED. NOTIFY ARCHITECT OF ANY CONFLICTS OF LOCATIONS PRIOR TO INSTALLATION.
4. ALL DIMENSIONS ARE TO CENTERLINE OF FIXTURE UNLESS OTHERWISE NOTED.
5. SEE FINISH PLANS FOR PAINT COLORS OF CEILING SOFFITS.
6. CONTRACTOR IS NOT TO INSTALL ANY ACCESS PANELS IN GWB CEILING WITHOUT PRIOR APPROVAL AND COORDINATION WITH ARCHITECT.
7. ALL EXPOSED DUCTWORK TO BE PAINTED, **PT-3**, IN SEMI-GLOSS FINISH.
8. ALL INTERIOR SUSPENDED LIGHTS TO BE MOUNTED AT **9'-0" AFF** U.N.O.
9. ALL EXTERIOR SUSPENDED LIGHTS TO BE MOUNTED W/ EQUAL CORD LENGTH - SEE ELECTRICAL DRAWINGS

ROOF PLAN LEGEND

	2" TALL STANDING SEAM METAL ROOF WITH 16" WIDE PANELS W/ PENCIL RIBS AND ICE AND WATER SHIELD UNDER FULL ROOF AREA
1" / 12"	SLOPE
	SOLAR PANELS - SEE ELECTRICAL DRAWINGS

ROOF PLAN NOTES

1. STRUCTURAL WOOD ROOF DECK IS ALSO FINISHED CEILING - NO FASTENERS SHALL PENETRATE DECKING
2. NO EXPOSED CONDUIT SHALL BE RUN ACROSS UNDERSIDE OF WOOD DECKING WITHOUT REVIEW AND COORDINATION WITH THE ARCHITECT. COORDINATE FOR LIGHTING, SECURITY, ETC.

GENERAL CELING AND ROOF NOTES

KEY	DESCRIPTION
1	VENT THRU ROOF - SEE PLUMBING DRAWINGS
2	4" DIAMETER DOWNSPOUT
3	5"X5" ALUMINUM GUTTER
4	WALL OUTLINE BELOW
5	UNIT HEATER - SEE MECHANICAL DRAWINGS
7	STEEL BENT PLATE AROUND PERIMETER OF ROOF - SEE STRUCTURAL - PAINT PER SPEC 09 9600
8	EXTERIOR WALL MOUNTED LIGHT - SEE ELECTRICAL DRAWINGS
9	CONTINUOUS METAL FASCIA - FULL PERIMETER

Susan Hatchell
Landscape Architecture, PLLC
711 W. North Street, Raleigh, NC 27603
p: 919-838-9600 f: 919-838-9700

Esse Architects
620 PERSHING ROAD | RALEIGH, NORTH CAROLINA 27608

REFLECTED CEILING AND ROOF PLANS

LAKE MYRA COUNTY PARK
Wake County, NC

REVISIONS

Esse Architects P.A. Registered Architectural Corporation 52498 North Carolina Raleigh, NC

MIRANDA DONNER POTTHOFF Registered Architect 11663 Signature Miranda Potthoff Seal IECHSBBGEHSBE North Carolina Raleigh, NC 7/27/2026

Date: 07/27/26

MF-A111

Docusign Envelope ID: 64A88F3C-582E-8A95-8091-A28AA91D843E

FINISH LEGEND

FLOORING

		BASIS OF DESIGN:	EQUAL 1:	EQUAL 2:
096813.04	MANUFACTURER:	MOHAWK	SHAW CONTRACT	MILLIKEN
WOC-1	COLLECTION:	TUFF STUFF II	STEPPIN OUT	OBEX TILE
WALK OFF CARPET	PATTERN:	STEP UP II	WELCOME II TILE	CUT/STIPPLE
	COLOR:	983 IRON ORE	BLAK CHOCOLATE	TAUPE
	SIZE:	24" X 24"	24" X 24"	50CM X 50CM
	INSTALL METHOD:	MONOLITHIC	QUARTER TURN	MONOLITHIC
093013.06	MANUFACTURER:	MILESTONE	MOSAIC	SPECIALTY TILE PRODUCTS
PORF-2	COLLECTION:	URBAN LIVING	ARGENT 2.0	RECONCRETE
FLOOR TILE	COLOR:	TITANIUM; RAW FINISH	CLEAN SLATE	STORM
	TYPE/SIZE:	24" x 24"; MOSAIC @ SHOWER	12" X 12"; 2" X 2" MOSAIC @ SHOWER	24" x 24"; 2" X 2" MOSAIC @ SHOWER
	GROUT:	LATICRETE SPECTRALOCK: TBD	LATICRETE SPECTRALOCK: TBD	LATICRETE SPECTRALOCK: TBD
	INSTALL METHOD:	MONOLITHIC	MONOLITHIC	MONOLITHIC
033901.01	MANUFACTURER:	SEE SPECIFICATION		
SC-1				
SEALED CONCRETE				

BASE

096513.01	MANUFACTURER	ROPPE	JOHNSONITE	FLEXCO
RB-1	COLOR:	175 SLATE	COLONIAL GREY	MEDIUM GRAY
RUBBER BASE	PROFILE/HEIGHT:	6"; TOELESS @ CPT , STANDARD TOE @ PC	6"; TOELESS @ CPT , STANDARD TOE @ PC	6"; STRAIGHT @ CPT , COVE @ PC
093013.07	MANUFACTURER:	MILESTONE	MOSAIC	SPECIALTY TILE PRODUCTS
TB-2	COLLECTION:	URBAN LIVING	ARGENT 2.0	RECONCRETE
TILE BASE	COLOR:	TITANIUM; RAW FINISH	CLEAN SLATE	STORM
	TYPE/SIZE:	24" x 24"; FIELD CUT TO 6" H	12" X 12"; FIELD CUT TO 6" H	24" x 24"; FIELD CUT TO 6" H
	GROUT:	LATICRETE SPECTRALOCK: TBD	LATICRETE SPECTRALOCK: TBD	LATICRETE SPECTRALOCK: TBD
	INSTALL METHOD:	MONOLITHIC	MONOLITHIC	MONOLITHIC

WALLS

093013.05	MANUFACTURER:	BEST TILE	MOSAIC	SPECIALTY TILE PRODUCTS
WT-3	COLLECTION:	MAREA	KREA 2.0	EARTH
WALL TILE	COLOR:	ARCTIC; MATTE	ARCTIC; MATTE	BONE
	TYPE/SIZE:	4" X 12"	4" X 12"	2" X 8"
	GROUT:	LATICRETE SPECTRALOCK: TBD	LATICRETE SPECTRALOCK: TBD	LATICRETE SPECTRALOCK: TBD
	INSTALL METHOD:	VARIES; SEE ELEVATIONS	VARIES; SEE ELEVATIONS	VARIES; SEE ELEVATIONS
093013.06	MANUFACTURER:	BEST TILE	MOSAIC	SPECIALTY TILE PRODUCTS
WT-4	COLLECTION:	MAREA	KREA 2.0	EARTH
WALL TILE	COLOR:	LEAF; MATTE	LEAF; MATTE	LEAF
	TYPE/SIZE:	4" X 12"	4" X 12"	2" X 8"
	GROUT:	LATICRETE SPECTRALOCK: TBD	LATICRETE SPECTRALOCK: TBD	LATICRETE SPECTRALOCK: TBD
	INSTALL METHOD:	VARIES; SEE ELEVATIONS	VARIES; SEE ELEVATIONS	VARIES; SEE ELEVATIONS
098433.01	MANUFACTURER:	TURF	ACOUFELT	FILZFELT
AWP-1	COLLECTION:	WALLSCAPE	PREMIER	ARO PLANK 1
ACOUSTICAL WALL PANEL	PATTERN:	TUBULAR	FILTER	ARO PLANK 1.2:B
	COLOR:	50 IVORY	ALMOND	150 WOLLWEIB
	TYPE/SIZE:	12" X 12" TILE	12" X 12" TILE	2 1/4" X 9'
	INSTALL METHOD:	MOUNT WITH LIQUID NAILS LN-903	MOUNT WITH LIQUID NAILS LN-903	MANUFACTUER MOUNTING SYSTEM
098433.02	MANUFACTURER:	ARMSTRONG	ACOUFELT	FILZFELT
AWP-2	COLLECTION:	FELTWORKS	SOLID	AKUSTIKA 10 WALL
ACOUSTICAL WALL PANEL	PATTERN:	N/A	N/A	N/A
	COLOR:	WHITE (FWH)	ALMOND	150 WOLLWEIB
	TYPE/SIZE:	24" X 48"; SEE ELEVATION	24" X 48"; SEE ELEVATION	24" X 48"; SEE ELEVATION
	INSTALL METHOD:	MOUNT WITH Z-CLIPS	MOUNT WITH Z-CLIPS	MOUNT WITH Z-CLIPS
097201.01	MANUFACTURER:	MOMENTUM	ACOUFELT	FILZFELT
AF-1	COLLECTION:	NUFELT	WALLCOVERING	3MM WOOL DESIGN FELT
ACOUSTICAL FELT	PATTERN:	NON-REVERSE HANG, RANDOM MATCH	STRAIGHT HANG, STRAIGHT MATCH	STRAIGHT HANG, STRAIGHT MATCH
	COLOR:	LEGEND	RAVEN	175 GRAPHIT
	TYPE/SIZE:	63" W; ROLLED	54" W; ROLLED	70" W; ROLLED
	INSTALL METHOD:	ADHESIVE PER MANUFACTURER GUIDELINES	ADHESIVE PER MANUFACTURER GUIDELINES	ADHESIVE PER MANUFACTURER GUIDELINES

CEILING

095113.01	MANUFACTUER:	ARMSTRONG	USG	CERTAINTEED
ACT-1	STYLE:	ULTIMA	MARS	SYMPHONY M
ACOUSTICAL CEILING TILE	COLOR:	WHITE (WH)	FLAT WHITE	WHITE
	SIZE:	24" X 24" BEVELED TEGULAR	24" X 24" FINELINE BEVEL	24" X 24" REVEAL BEVEL
	GRID:	15/16	15/16	15/16

MILLWORK

		BASIS OF DESIGN:	EQUAL 1:	EQUAL 2:
064116.01	MANUFACTURER:	WILSONART	FORMICA	ARBORITE
PL-1	COLOR:	LANDMARK WOOD	AGED ASH	NATURAL CROSSFIRE PEAR
PLASTIC LAMINATE	FINISH:	SOFTGRAIN	WOODBRUSH	EVERGRAIN EV
064116.02	MANUFACTURER:	WILSONART	FORMICA	NEVAMAR
PL-2	COLOR:	SILK MIST	OASTER GRAY	PORCELAIN
PLASTIC LAMINATE	FINISH:	MATTE FINISH	MATTE	TEXTURED/SUEDE
123663.01	MANUFACTURER:	WILSONART	HI-MACS	MEGANITE
SS-1	COLOR:	YUKON RIVERSTONE	ANDROMEDA	BLANCA GRANITE
SOLID SURFACE	THICKNESS:	1/2"	1/2"	1/2"
	EDGE:	SQUARE WITH EASED CORNERS	SQUARE WITH EASED CORNERS	SQUARE WITH EASED CORNERS
064193	MANUFACTURER:	RICHELIEU	HAFELE	AMEROCK
	PRODUCT:	BP2102128170	MATCH BOD	MATCH BOD
CABINET PULL	FINISH:	STAINLESS STEEL	STAINLESS STEEL	STAINLESS STEEL

PAINTS

099123.01	MANUFACTURER	SHERWIN WILLIAMS	BENJAMIN MOORE	PPG
PT-1	COLOR:	SW 6203 SPARE WHITE	MATCH BOD	MATCH BOD
FIELD	SHEEN:	EGGSHELL	EGGSHELL	EGGSHELL
099123.03	MANUFACTURER	SHERWIN WILLIAMS	BENJAMIN MOORE	PPG
PT-3	COLOR:	SW 7048 URBANE BRONZE	MATCH BOD	MATCH BOD
FIELD	SHEEN:	EGGSHELL	EGGSHELL	EGGSHELL
099123.04	MANUFACTURER	SHERWIN WILLIAMS	BENJAMIN MOORE	PPG
PT-4	COLOR:	SW 9167 POLISHED CONCRETE	MATCH BOD	MATCH BOD
HM DOORS & TRIM	SHEEN:	SEMI-GLOSS	SEMI-GLOSS	SEMI-GLOSS
099123.05	MANUFACTURER	SHERWIN WILLIAMS	BENJAMIN MOORE	PPG
PT-5	COLOR:	SW 6438 DILL	MATCH BOD	MATCH BOD
HM DOORS & TRIM	SHEEN:	SEMI-GLOSS	SEMI-GLOSS	SEMI-GLOSS
099323.01	MANUFACTURER	SHERWIN WILLIAMS	BENJAMIN MOORE	PPG
ST-1	COLOR:	MATCH PL-1	MATCH BOD	MATCH BOD
WOOD STAIN	SHEEN:	SATIN	SATIN	SATIN

MISC.

122413.01	MANUFACTUER:	MECHOSHADE	HUNTER DOUGLAS ARCHITECTURAL	ROLL A SHADE
RWS-1	COLLECTION:	MANUAL URBANSHADE ROLLER SHADES	RB 500+ MANUAL ROLLER SHADES	INFINITY SHADE - MANUAL
ROLLER WINDOW SHADES	FASCIA COLOR:	WHITE	WHITE	WHITE
	FABRIC COLOR:	ECOSHEER 3% - METAL	SHEERWEAVE INFINITY2 3% - SLATE	PHIFER 3% - OYSTER/PEWTER
	SIZE:	VARIES; FIELD VERIFY	VARIES; FIELD VERIFY	VARIES; FIELD VERIFY

Susan Hatchell
Landscape Architecture, PLLC
711 W. North Street, Raleigh, NC 27603
p: 919-838-9600 f: 919-838-9700

Esse Architects
EST. PERSONAL LEGACY | RALEIGH, NORTH CAROLINA | 2008

FINISH LEGEND

LAKE MYRA COUNTY PARK
Wake County, NC

Esse Architects P.A. Registered Architectural Corporation 52498 North Carolina Raleigh, NC

MIRANDA DOWNER POTTHOFF Registered Architect 17663 Licensed HIGHGROUND North Carolina Raleigh, NC 7/27/2026

REVISIONS

Date: 07/27/26

MF-A130

Docusign Envelope ID: 64A88F3C-582E-8A95-8091-A28AA91D843E

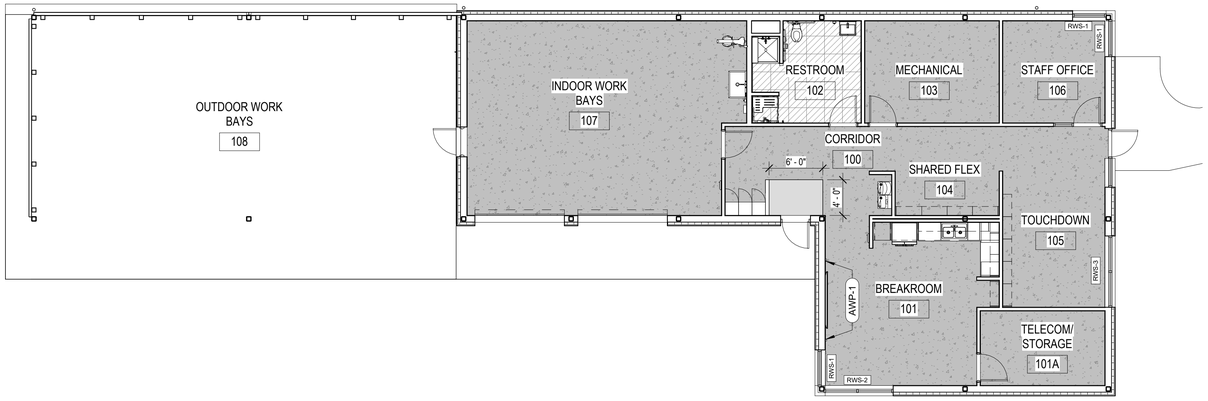

1 MF-A131 MAINTENANCE FACILITY - FINISH PLAN
1/8" = 1'-0"

NOTE: WALL FINISH LOCATIONS NOTED IN THE SCHEDULE ARE ORIENTED USING PLAN NORTH AS THE REFERENCE DIRECTION.

FINISH SCHEDULE

ROOM NUMBER	ROOM NAME	FLOOR		WALLS				CEILING	MILLWORK		COMMENTS
		FLOOR	BASE	NORTH	EAST	SOUTH	WEST		CABINETRY	COUNTERTOP	
100	CORRIDOR	WOC-1; SC-1	RB-1	PT-1	PT-1	PT-1	PT-1	EXPOSED; PT-1	--	--	
101	BREAKROOM	SC-1	RB-1	PT-1, WT-3	PT-1	PT-1	PT-1	EXPOSED; PT-1	PL-1	SS-1	
101A	TELECOM / STORAGE	SC-1	RB-1	PT-1	PT-1	PT-1	PT-1	ACT-1	--	--	
102	RESTROOM	PORF-2	TB-2	WT-4;PT-1	WT-4;PT-1	WT-4;PT-1	WT-4;PT-1	PT-6	--	--	
103	MECHANICAL	SC-1	RB-1	PT-1	PT-1	PT-1	PT-1	EXPOSED; PT-1	--	--	
104	SHARED FLEX	SC-1	RB-1	PT-1	PT-1	PT-1; AWP-2	PT-1	EXPOSED; PT-1	PL-2	--	
105	TOUCHDOWN	SC-1	RB-1	PT-1	PT-1; AWP-2	PT-1	PT-1; AWP-2	EXPOSED; PT-1	PL-2	--	
106	STAFF OFFICE	SC-1	RB-1	PT-1	PT-1	PT-1	PT-1	EXPOSED; PT-1	--	--	
107	INDOOR WORK BAYS	SC-1	RB-1	PT-1	PT-1	PT-1	PT-1	EXPOSED; PT-1	--	--	HIGH PERFORMANCE PAINT
108	OUTDOOR WORK BAYS	--	--	--	--	--	--	--	--	--	

ROLLER SHADE SCHEDULE

MARK	LENGTH (VERIFY)
RWS-1	4' - 0"
RWS-2	7' - 0"
RWS-3	8' - 0"

SYMBOL LEGEND

X-X	FINISH TAG
TXT	ROLLER SHADE TAG
– – – – –	TILED WALL

GENERAL FINISH NOTES

1. ALL DIMENSIONS TO BE FIELD VERIFIED PRIOR TO ORDERING. DO NOT SCALE FROM DRAWINGS.
2. ALL MATERIALS SHALL BE INSTALLED PER MANUFACTURER'S RECOMMENDATIONS WITH APPROVED ADHESIVES OR OTHER FASTENERS.
3. IF THERE ARE QUESTIONS ABOUT THE DESIGN INTENT OF ANY PATTERN OR MATERIAL TO BE INSTALLED, THE G.C. SHALL SUBMIT A REQUEST FOR INFORMATION TO THE DESIGNER FOR CLARIFICATION PRIOR TO ORDERING THE MATERIALS.
4. THE G.C. SHALL PROVIDE ALL FINISHING PIECES AND TRANSITIONS WHERE DIFFERENT FLOORING THICKNESSES MEET, U.N.O. THE G.C. SHALL SUBMIT A SAMPLE OF THE COLOR/FINISH TO THE DESIGNER FOR APPROVAL.
5. ALL WALLS TO BE FIELD PAINT, **PT-1**, U.N.O. ALL GYP. BD. PARTITIONS TO RECEIVE A LEVEL 4 FINISH.
6. ALL INTERIOR HM DOOR FRAMES TO RECEIVE PAINT IN SEMI-GLOSS FINISH, **PT-4**, U.N.O.
7. ALL INTERIOR GYP. BD. PARTITIONS TO RECEIVE RUBBER BASE, **RB-1**, U.N.O.
8. EXPOSED ADA THERMAL INSULATED KITS AT SINKS TO BE PAINTED TO WATCH ADJACENT WALL.
9. IN INTERIOR CONDITIONS, FLOORING TO TRANSITION UNDER CLOSED DOOR. FLOORING TO TRANSITION IN CENTER OF CASED OPENING WHEN NO DOOR IS SCHEDULED.
10. ALL COVER PLATES (DATA, LIGHTS, TELEPHONE, ETC.) AND ALL DEVICES TO COORDINATE WITH WAKE COUNTY STANDARDS.

FLOOR FINISH LEGEND

WALK-OFF CARPET, **WOC-1**

SEALED CONCRETE, **SC-1**

PORCELAIN TILE, **PORF-2**

Susan Hatchell
Landscape Architecture, PLLC
711 W. North Street, Raleigh, NC 27603
p: 919-838-9600 f: 919-838-9700

Esse Architects
630 PERSHING ROAD | RALEIGH, NORTH CAROLINA 27608

FINISH PLAN, LEGEND AND SCHEDULE

LAKE MYRA COUNTY PARK
Wake County, NC

Esse Architects P.A. Registered Architectural Corporation 52498 North Carolina Raleigh, NC

MIRANDA DONNER POTTHOFF Registered Architect 11663 Signature Miranda Potthoff IEC04540B02B4B6 North Carolina Raleigh, NC 7/27/2026

REVISIONS

Date: 07/27/26

MF-A131

Docusign Envelope ID: 64A88F3C-582E-8A95-8091-A28AA91D843E

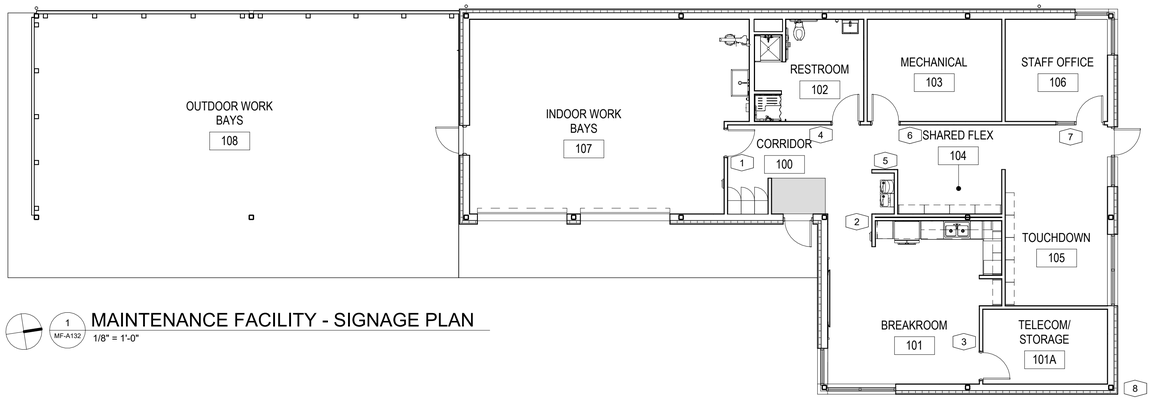

1 MF-A132 MAINTENANCE FACILITY - SIGNAGE PLAN
1/8" = 1'-0"

SIGNAGE SCHEDULE				
SIGN NO.	ROOM NO.	SIGNAGE TEXT	SIGN TYPE	COMMENTS
1	107	INDOOR WORK BAYS	ID.2	
2	101	BREAKROOM	ID.1	
3	101A	TELECOM / STORAGE	ID.2	
4	102	RESTROOM	R.3	
5	--	EVACUATION MAP	E.1	
6	103	MECHANICAL	ID.1	
7	106	OFFICE	ID.1	
8	EXTERIOR	SEE SIGNAGE DETAIL	D.1	GC PROVIDED

ALL BUILDING SIGNAGE TO BE PROVIDED BY THE OWNER UNLESS OTHERWISE NOTED.

SPECIFICATIONS

GENERAL SIGNAGE NOTES

BRAILLE CHARACTERS ARE FOR GRAPHIC REPRESENTATION ONLY - ACTUAL BRAILLE CHARACTERS TO BE DETERMINED BY SIGN FABRICATOR

ADA COMPLIANT 1/8" THERMOFORM SIGN CONSISTING OF INTEGRAL RAISED COPY, GRADE II BRAILLE WITH SUBSURFACE COPY AND PAINT, SIGN TO BE CLEARCOATED AFTER PAINT AND FOIL STAMP HAS BEEN APPLIED.

ROOM NUMBER, BRAILLE, AND ACCENTS ARE RAISED.

WHERE SIGN IS MOUNTED TO GLASS, PLACE A THERMOFORM BLANK SIGN MOUNTED ON OPPOSITE SIDE OF GLASS. BACK PANEL TO MATCH BACKGROUND COLOR.

COPY STYLE: OPTIMA MEDIUM

COPY COLOR: BLACK; ARCHITECT TO SELECT FROM MANUFACTURERS FULL LINE OF COLORS.

BACKGROUND COLOR: ROWMARK BLACK FOREST GREEN OR EQUAL; ARCHITECT TO SELECT FROM MANUFACTURERS FULL RANGE OF COLORS.

BRAILLE COLOR: CLEAR

SYMBOL COLOR: WHITE ; ARCHITECT TO SELECT FROM MANUFACTURERS FULL RANGE OF COLORS.

NOTE: ALL SIGN TYPES TO MEET ADA REQUIREMENTS FOR COLOR CONTRAST RATIO

CORNERS: SQUARE

SIGN MOUNTING: 3M #4910 CLEAR VHB DOUBLE-SIDED TAPE AND CLEAR SILICONE ADHESIVE

SIGN TYPE E.1 SPECIFICATIONS

1/16" NON-GLARE ACRYLIC ON BOTH SIDES.

BACKGROUND COLOR: RED; ARCHITECT TO SELECT FROM MANUFACTURERS FULL RANGE OF COLORS.

SURFACE APPLIED GRAPHICS, DOUBLE SIDED. COLOR WHITE; ARCHITECT TO SELECT FROM MANUFACTURERS FULL RANGE OF COLORS.

SIGN MOUNTING: EXTRUDED ALUMINUM - CORRIDOR BRACKET SILVER ANODIZED FINISH, MECHANICALLY MOUNTED TO WALL

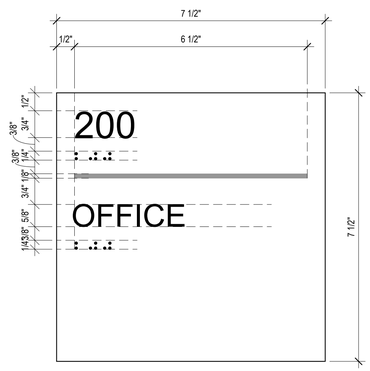

SIGNAGE TYPE ID.1 - ROOM INDICATOR 1 LINE

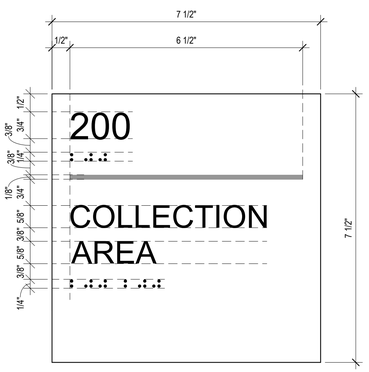

SIGNAGE TYPE ID.2 - ROOM INDICATOR 2 LINE

SIGNAGE TYPE R.3 - UNISEX ADA

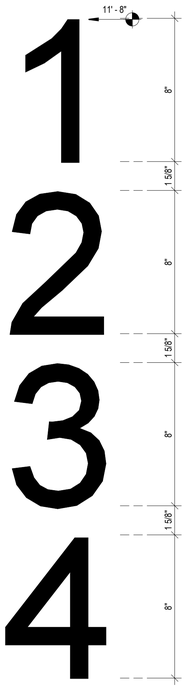

SIGNAGE TYPE D.1 - EXTERIOR BUILDING ADDRESS - GC PROVIDED

DIMENSIONAL SIGNAGE NOTES

FABRICATED METAL SIGNS

TYPEFACE: ARIAL

COLOR: SW 6438 DILL

MOUNTING: DETACHABLE MOUNTING STUDS

SIGN TO BE PROVIDED BY THE GC

BUILDING NUMBER TO BE CONFIRMED WITH OWNER PRIOR TO SUBMITTALS

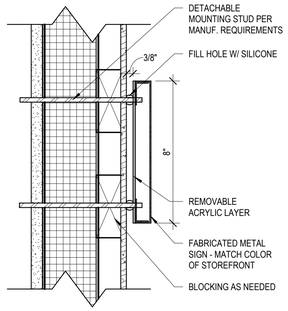

SIGNAGE TYPE E.1 - EVACUATION PLAN

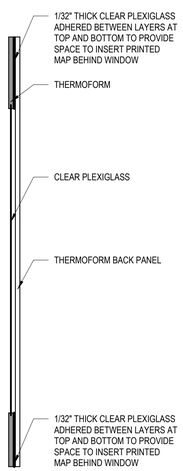

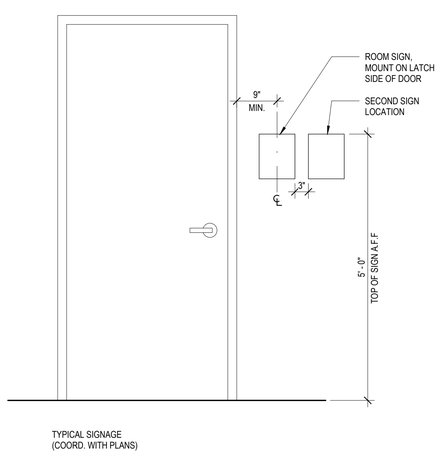

SIGNAGE MOUNTING HEIGHT

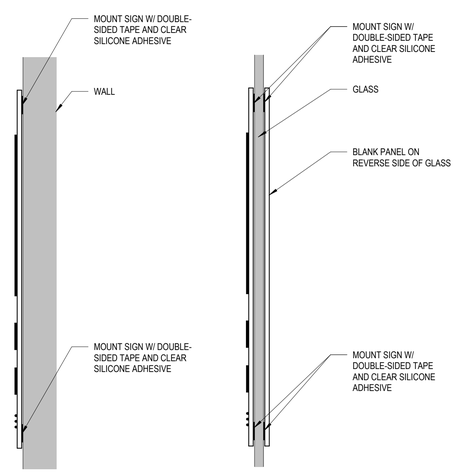

SIGNAGE MOUNTING TYPES

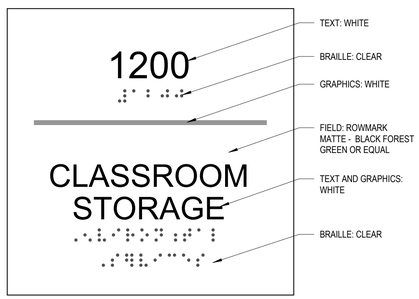

SIGNAGE COLOR SAMPLE

Susan Hatchell
Landscape Architecture, PLLC
711 W. North Street, Raleigh, NC 27603
p: 919-838-9600 f: 919-838-9700

Esse Architects
820 PERSHING ROAD | RALEIGH, NORTH CAROLINA 27608

SIGNAGE PLAN & DETAILS

LAKE MYRA COUNTY PARK
Wake County, NC

Esse Architects P.A. Registered Architectural Corporation 52498 North Carolina Raleigh, NC

MIRANDA DOWNER POTTHOFF Registered Architect 11663 Licensed to practice in North Carolina Raleigh, NC 7/27/2026

REVISIONS

Date: 07/27/26

MF-A132

Docusign Envelope ID: 64A88F3C-582E-8A95-8091-A28AA91D843E

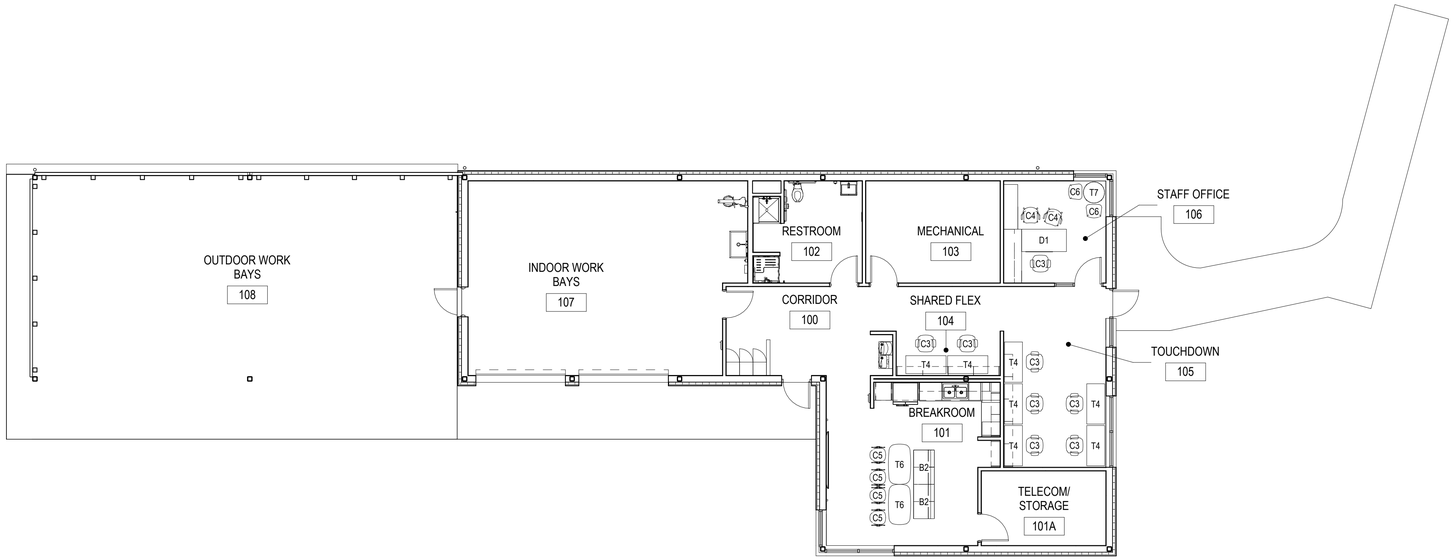

1 MF-A140 MAINTENANCE FACILITY - FURNITURE PLAN

1/8" = 1'-0"

FOR GC'S REFERENCE AND COORDINATION ONLY

FURNITURE SCHEDULE

MARK	DESCRIPTION	QUANTITY
B2	UPHOLSTERED BOOTH SEATING	2
C3	UPHOLSTERED TASK SEATING W/ CASTERS	8
C4	GUEST CHAIR	2
C5	CAFE CHAIR	4
C6	CONFERENCE CHAIR W/ ARMS - UPHOLSTERED SEAT	2
D1	WORKSTATION WITH FIXED WORKSURFACE, ADJUSTABLE HEIGHT COMPUTER WORKSTATION, AND FILE STORAGE	1
T4	FREE STANDING WORKSTATION W/ INTEGRATED CHARGING	7
T6	CAFE TABLE	2
T7	24" D TABLE	1

Susan Hatchell
Landscape Architecture, PLLC
711 W. North Street, Raleigh, NC 27603
p: 919-838-9600 f: 919-838-9700

Esse Architects
830 PERSHING ROAD | RALEIGH, NORTH CAROLINA 27608

FURNITURE PLAN

LAKE MYRA COUNTY PARK
Wake County, NC

Esse Architects P.A. Registered Architectural Corporation 52498 North Carolina Raleigh, NC

MIRANDA DONNER POTTHOFF Registered Architect 11663 Licensed HCCAMP/Licensed North Carolina Raleigh, NC 7/27/2026

Miranda Potthoff

REVISIONS

Date: 07/27/26

MF-A140

Docusign Envelope ID: 64A88F3C-582E-8A95-8091-A28AA91D843E

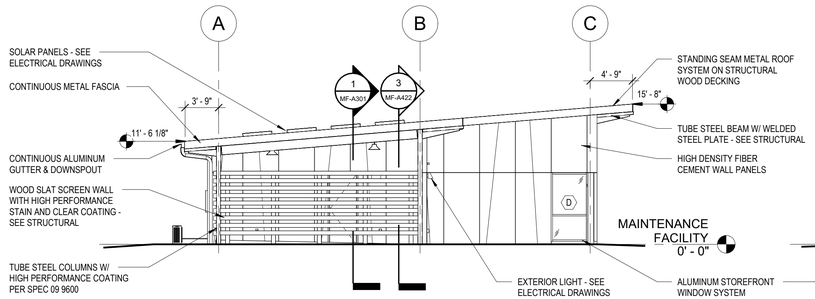

1 MF-A201 MAINTENANCE FACILITY - NORTHEAST ELEVATION
1/8" = 1'-0"

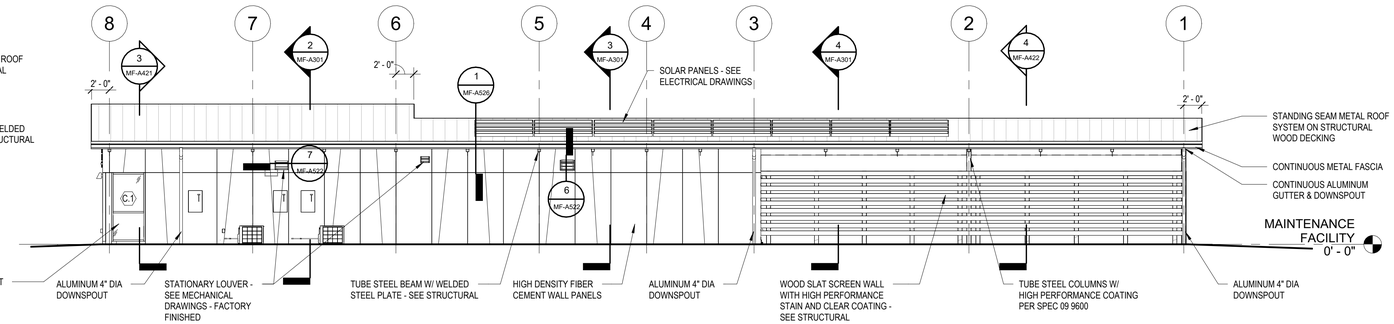

2 MF-A201 MAINTENANCE FACILITY - SOUTHEAST ELEVATION
1/8" = 1'-0"

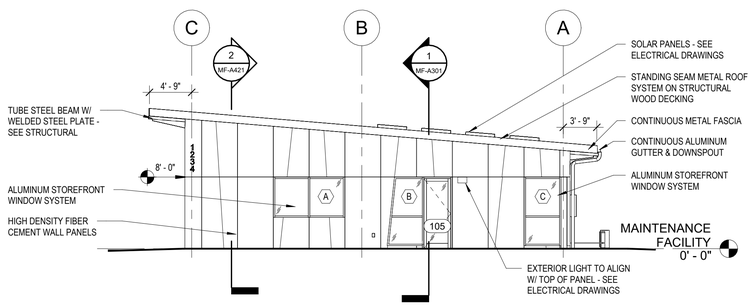

3 MF-A201 MAINTENANCE FACILITY - SOUTHWEST ELEVATION
1/8" = 1'-0"

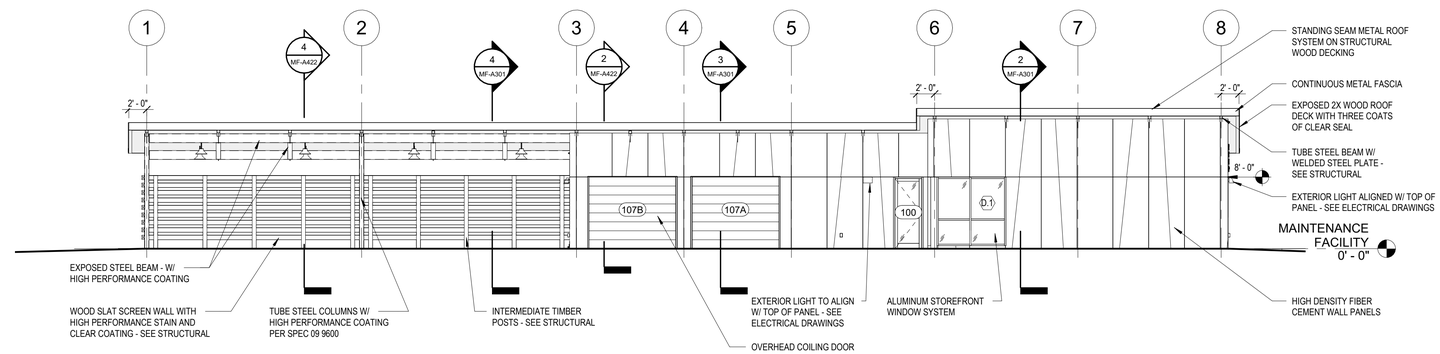

4 MF-A201 MAINTENANCE FACILITY - NORTHWEST ELEVATION
1/8" = 1'-0"

EXTERIOR MATERIAL SCHEDULE - MAINTENANCE FACILITY

WALLS	
FIBER CEMENT PANELS	SWISSPEARL - AVERA - AV100+AV060
ROOF	
STANDING SEAM METAL PANELS	PAC-CLAD - TITE-LOCK - GRANITE
SOFFITS	EXPOSED WOOD DECKING WITH THREE COATS CLEAR SEAL
STOREFRONT, GUTTERS, DOWNSPOUTS, AND TRIM	
STOREFRONT	PAINTED SHERWIN WILLIAMS SW 6438 - DILL
GUTTERS AND DOWNSPOUTS	HIGH PERFORMANCE COATING - SW 7048 - URBANE BRONZE

STEEL	
EXPOSED STRUCTURE	HIGH PERFORMANCE COATING - SW 7048 - URBANE BRONZE
DOORS AND FRAMES	HIGH PERFORMANCE COATING - SEE DOOR SCHEDULE FOR FINISH
GLAZING	
VISION GLASS	LOW-E CLEAR GLASS

NOTES:

1. ALL FINISHES NOTED HERE REPRESENT THE BASIS OF DESIGN - SEE SPECIFICATIONS FOR THREE EQUALS
2. ALL EXTERIOR PAINTS TO BE HIGH-PERFORMANCE COATINGS PER SPEC SECTION 09 9600.

Susan Hatchell
Landscape Architecture, PLLC
711 W. North Street, Raleigh, NC 27603
p: 919-838-9600 f: 919-838-9700

Esse Architects
ESS PERSONAL LEASE | RALEIGH, NORTH CAROLINA 2008

EXTERIOR ELEVATIONS

LAKE MYRA COUNTY PARK
Wake County, NC

Esse Architects P.A. Registered Architectural Corporation 52498 North Carolina Raleigh, NC

MIRANDA DONNER POTTHOFF Registered Architect 11663 Licensed HIGHER EDUCATION North Carolina Raleigh, NC 7/27/2026

REVISIONS

Date: 07/27/26

MF-A201

Docusign Envelope ID: 64A88F3C-582E-8A95-8091-A28AA91D843E

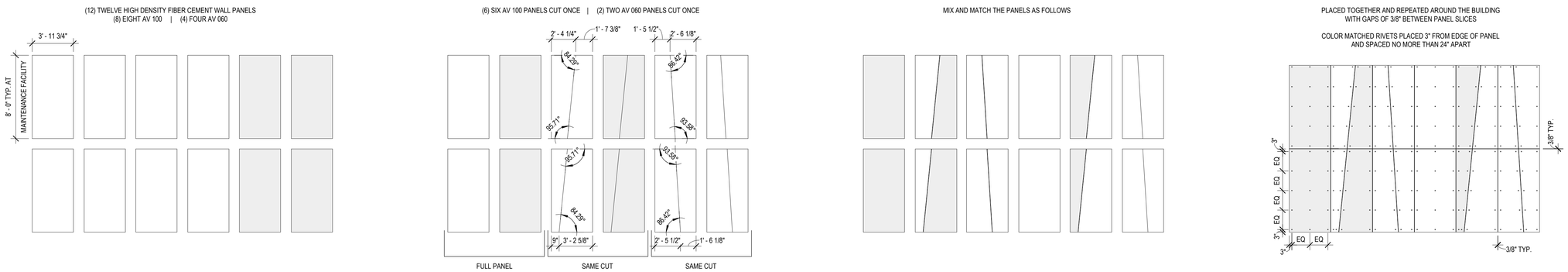

1 MF-A202 MAINTENANCE FACILITY EXTERIOR WALL PATTERN - EXPLODED
3/16" = 1'-0"

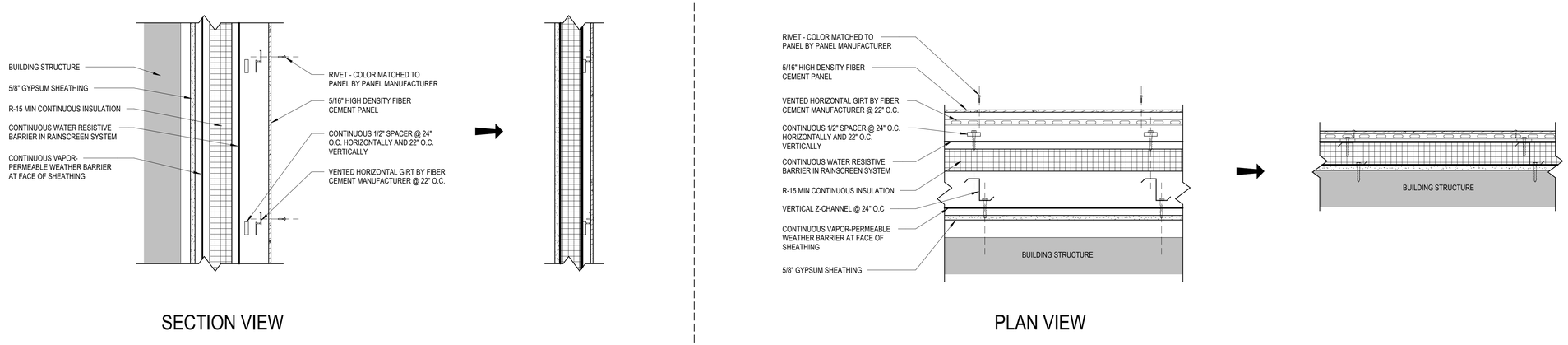

2 MF-A202 EXPLODED PANEL ATTACHMENT
1 1/2" = 1'-0"

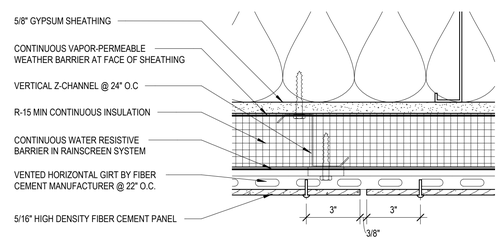

3 MF-A202 DETAIL @ VERTICAL PANEL JOINT
3" = 1'-0"

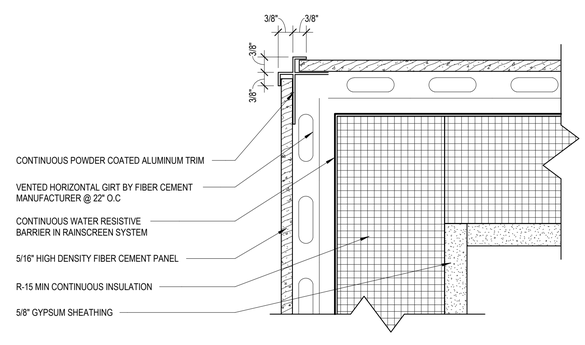

4 MF-A202 CORNER TRIM DETAIL
6" = 1'-0"

NOTE: PROVIDE CONTINUOUS POWDER COATED ALUMINUM TRIM ON ALL OUTSIDE CORNERS INCLUDING ABOVE 90 DEGREE STOREFRONT WINDOWS SEE FLOOR PLAN AND DETAILS FOR LOCATION CALLOUTS.

Susan Hatchell
Landscape Architecture, PLLC
711 W. North Street, Raleigh, NC 27603
p: 919-838-9600 f: 919-838-9700

Esse Architects
EST. PERSONAL LEADS | RALEIGH, NORTH CAROLINA | 2008

EXTERIOR PANEL LAYOUT

LAKE MYRA COUNTY PARK
Wake County, NC

REVISIONS

Esse Architects P.A. Registered Architectural Corporation 52498 North Carolina Raleigh, NC

MIRANDA DONNER POTTHOFF Registered Architect 17663 TECHNICAL DOCUMENT North Carolina Raleigh, NC 7/27/2026

Miranda Potthoff

Date: 07/27/26

MF-A202

Docusign Envelope ID: 64A88F3C-582E-8A95-8091-A28AA91D843E

NOTES:
1. IMAGE IS FOR REFERENCE, CONFIRM LAYOUT THROUGH SHOP DRAWINGS
2. CENTER VERTICAL PANEL JOINTS WITH THE CENTER OF STEEL BEAMS ABOVE
3. SEE MF-202 FOR HIGH DENSITY FIBER CEMENT PANEL PATTERN AND PLACEMENT

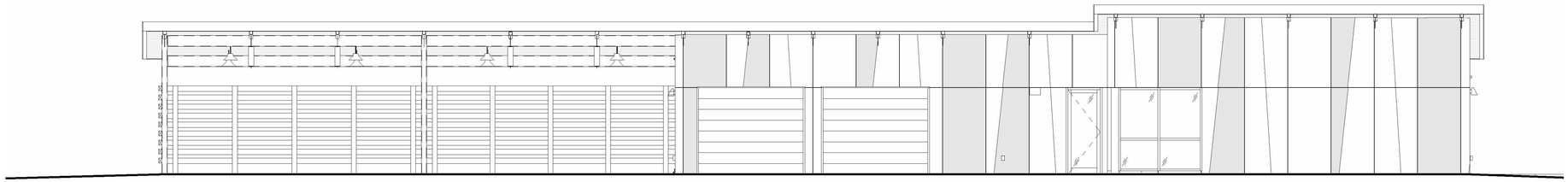

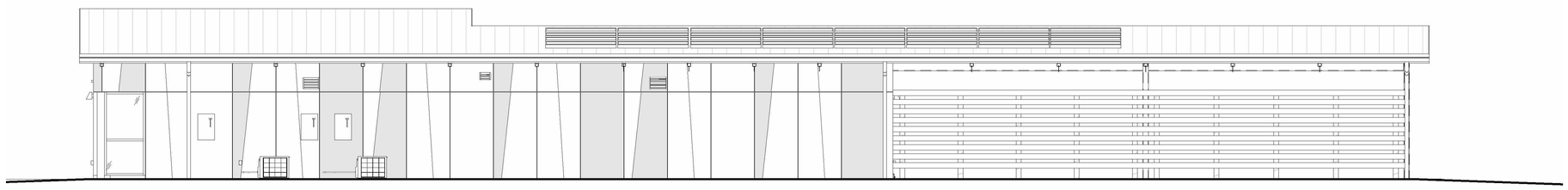

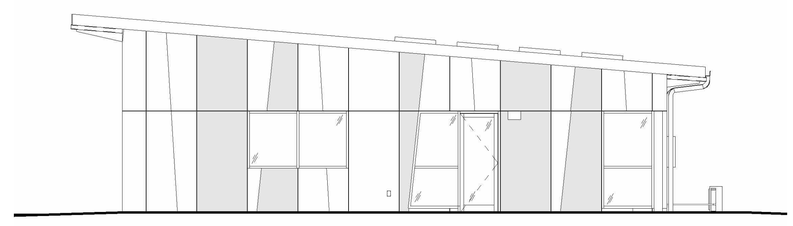

Susan Hatchell
Landscape Architecture, PLLC
711 W. North Street, Raleigh, NC 27603
p: 919-838-9600 f: 919-838-9700

Esse Architects
830 PERSHING | DURAM | RALEIGH, NORTH CAROLINA 27608

EXTERIOR PANEL LAYOUT

LAKE MYRA COUNTY PARK
Wake County, NC

REVISIONS

Esse Architects P.A.
Registered Architectural Corporation
52498
Raleigh, NC

MIRANDA DOWNER POTTHOFF
Registered Architect
North Carolina
Raleigh, NC
7/27/2026

Date: 07/27/26

MF-A203

Docusign Envelope ID: 64A88F3C-582E-8A95-8091-A28AA91D843E

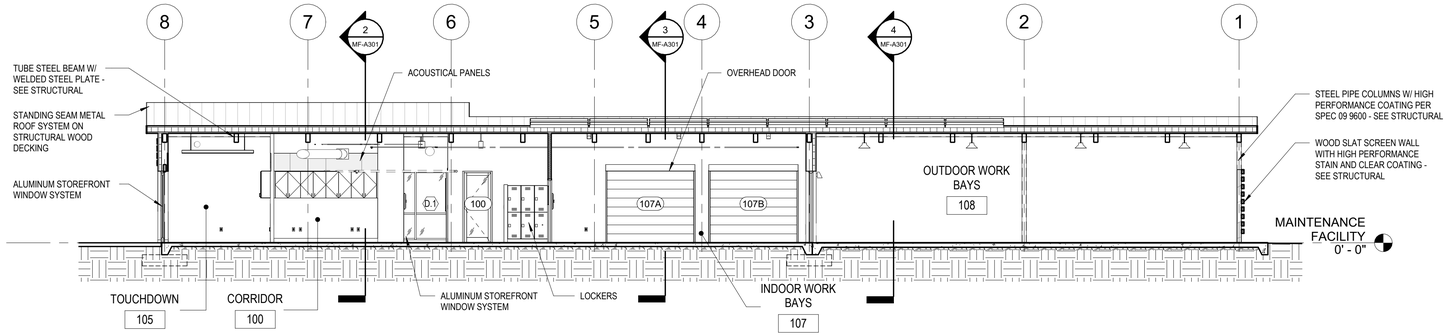

1 MF-A301 MAINTENANCE FACILITY - LONGITUDINAL SECTION
1/8" = 1'-0"

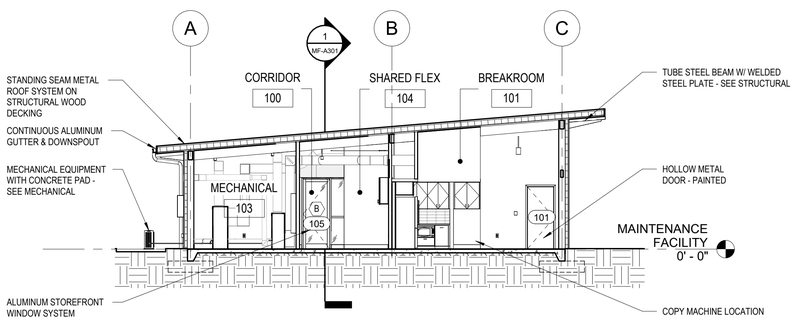

2 MF-A301 MAINTENANCE FACILTY - TRANSVERSE SECTION THROUGH BREAKROOM
1/8" = 1'-0"

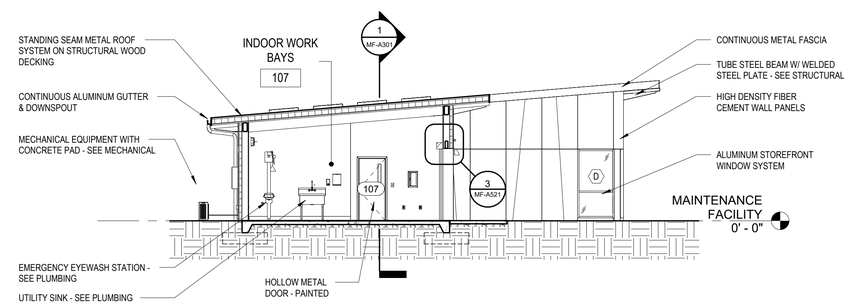

3 MF-A301 MAINTENANCE FACILTY - TRANSVERSE SECTION THROUGH INDOOR WORK BAYS
1/8" = 1'-0"

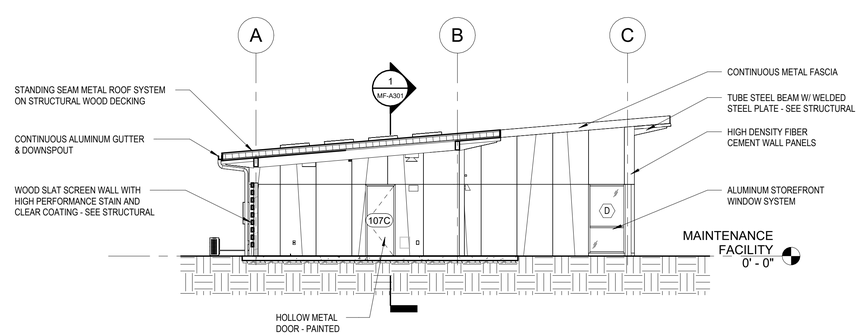

4 MF-A301 MAINTENANCE FACILTY - TRANSVERSE SECTION THROUGH OUTDOOR WORK BAYS
1/8" = 1'-0"

Susan Hatchell Landscape Architecture, PLLC
711 W. North Street, Raleigh, NC 27603
p: 919-838-9600 f: 919-838-9700

Esse Architects
632 PERSHING | EAST | RALEIGH, NORTH CAROLINA 27608

BUILDING SECTIONS

LAKE MYRA COUNTY PARK
Wake County, NC

REVISIONS

Esse Architects P.A. Registered Architectural Corporation 52498 North Carolina Raleigh, NC

MIRANDA DONNER POTTHOFF Registered Architect 11663 Miranda Potthoff North Carolina Raleigh, NC 7/27/2026

Date: 07/27/26

MF-A301

Docusign Envelope ID: 64A88F3C-582E-8A95-8091-A28AA91D843E

NOTE: FLUSH VALVE MUST BE MOUNTED TO THE WIDE SIDE OF THE STALL.

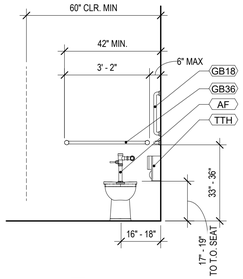

A

ADA TOILET STALL, FRONT ELEVATION

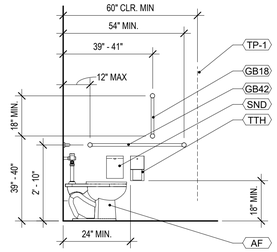

A

ADA TOILET STALL, SIDE ELEVATION

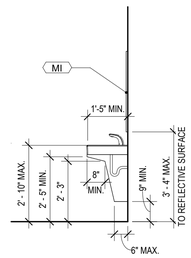

E

ADA WALL - MOUNTED SINK, SIDE ELEVATION

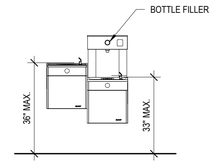

J

ADA WATER FOUNTAIN, FRONT ELEVATION

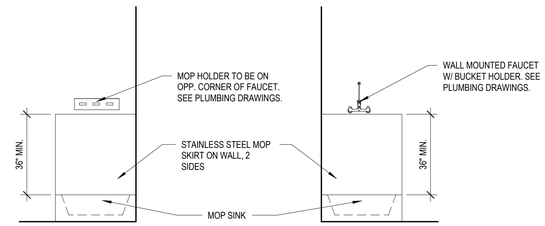

K

MOP SINK, SIDE ELEVATIONS

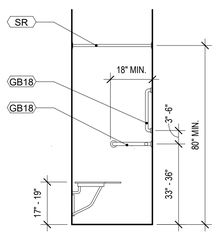

F

ADA TRANSFER SHOWER, BACK WALL ELEVATION

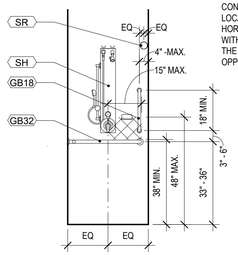

CONTROLS ARE REQUIRED TO BE LOCATED ON CONTROL WALL. THE HORIZONTAL PLACEMENT MUST BE WITHIN 15" OF THE CENTERLINE OF THE SEAT LOCATED ON THE OPPOSING WALL.

F

ADA TRANSFER SHOWER, CONTROL WALL ELEVATION

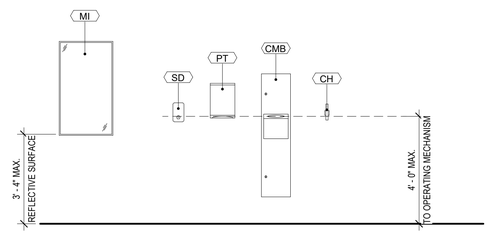

TOILET ACCESSORY MOUNTING HEIGHTS

SYMBOL LEGEND	
X-X	FINISH TAG
X	TOILET ASSEMBLY TAG. SEE A400 FOR ADDITIONAL INFORMATION
#	PARTITION TAG

#	TOILET ACCESSORIES LEGEND
AF	ACCESSIBLE FIXTURE
ASH	ACCESSIBLE SHOWER HEAD
CF	CLEAR FLOOR SPACE 30" x 52"
CH	COAT HOOK
CMB	COMBINED PAPER TOWEL/TRASH
FD	FLOOR DRAIN - SEE PLUMBING DRAWINGS
FDS	FOLD-DOWN SEAT
GB	GRAB BAR
GB18	GRAB BAR 18" LONG (VERTICAL)
GB24	GRAB BAR 24" LONG (SIDE WALLS)
GB32	GRAB BAR 32" LONG (REAR WALLS)
GB36	GRAB BAR 36" LONG (REAR WALLS)
GB42	GRAB BAR 42" LONG (SIDE WALLS)
MI	MIRROR 24" X 36"
PT	PAPER TOWEL DISPENSER
SD	SOAP DISPENSER
SH	SHOWER HEAD
SR	SHOWER ROD
TD	67" ACCESSIBLE TURNING DIAMETER
TH	TOWEL HOOK
TTH	TOILET TISSUE HOLDER
US	UTILITY SHELF

NOTES:

1. PLUMBING CONTRACTOR TO PROVIDE PROTECTIVE INSULATION AT HOT PIPES BELOW LAVATORY PER ACCESSIBILITY CODE.
2. FLUSH CONTROL VALVES AT ACCESSIBLE TOILETS TO BE MOUNTED ON THE WIDE SIDE OF TOILET STALL OR ROOM.
3. SEE SPECIFICATIONS FOR DETAILS OF TOILET ACCESSORIES.
4. ALL TOILET PARTITIONS ARE FLOOR MOUNTED AND OVERHEAD BRACED.
5. SLOPE FLOOR TILE TO DRAIN WITH MUD BED. THRESHOLDS SLOPE IN DOOR OPENINGS SHALL NOT EXCEED 1:8 SLOPE OR 1/2" IN HEIGHT PER ACCESSIBILITY CODE.

Susan Hatchell
Landscape Architecture, PLLC
711 W. North Street, Raleigh, NC 27603
p: 919-838-9600 f: 919-838-9700

Esse Architects
830 PERSHING ROAD | RALEIGH, NORTH CAROLINA 27608

TYPICAL TOILET AND BATH ACCESSORIES

LAKE MYRA COUNTY PARK
Wake County, NC

REVISIONS

Esse Architects P.A. Registered Architectural Corporation 52498 North Carolina Raleigh, NC

MIRANDA DONNER POTTHOFF Registered Architect 11663 North Carolina Raleigh, NC
Miranda Potthoff
IEC9A8BB62346A8...
7/27/2026

Date: 07/27/26

MF-A400

Docusign Envelope ID: 64A88F3C-582E-8A95-8091-A28AA91D843E

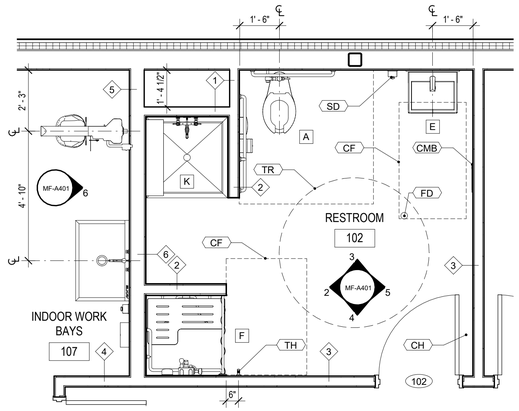

1 MF-A401 RESTROOM (102) - ENLARGED PLAN
3/8" = 1'-0"

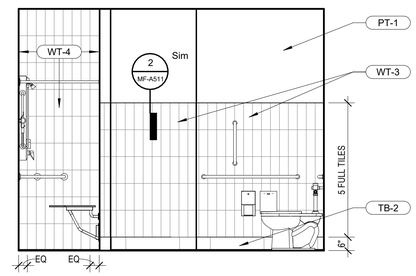

2 MF-A401 RESTROOM (102) - WEST ELEVATION
3/8" = 1'-0"

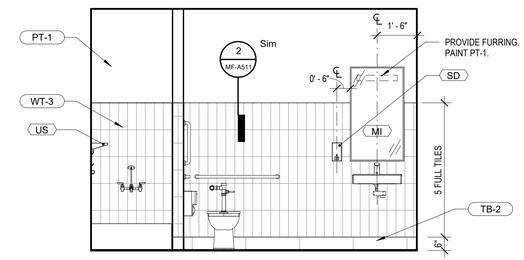

3 MF-A401 RESTROOM (102) - NORTH ELEVATION
3/8" = 1'-0"

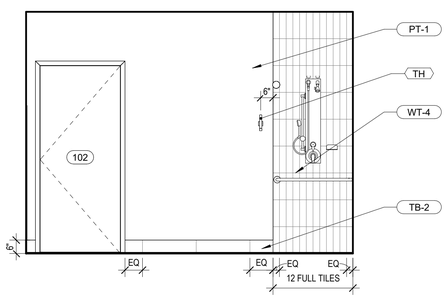

4 MF-A401 RESTROOM (102) - SOUTH ELEVATION
3/8" = 1'-0"

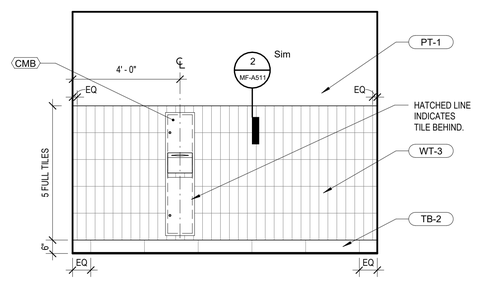

5 MF-A401 RESTROOM (102) - EAST ELEVATION
3/8" = 1'-0"

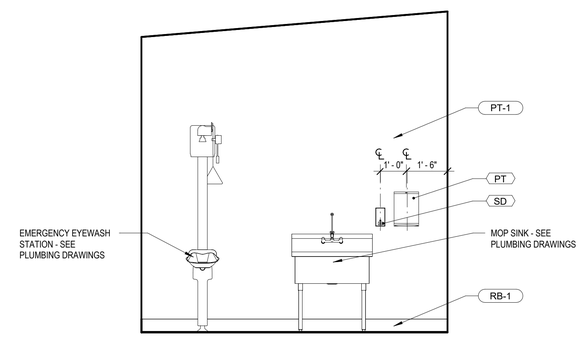

6 MF-A401 INDOOR WORK BAYS (107) - EAST ELEVATION
3/8" = 1'-0"

SYMBOL LEGEND

X-X	FINISH TAG
X	TOILET ASSEMBLY TAG. SEE A400 FOR ADDITIONAL INFORMATION
#	PARTITION TAG

TOILET ACCESSORIES LEGEND

AF	ACCESSIBLE FIXTURE
ASH	ACCESSIBLE SHOWER HEAD
CF	CLEAR FLOOR SPACE 30" x 52"
CH	COAT HOOK
CMB	COMBINED PAPER TOWEL/TRASH
FD	FLOOR DRAIN - SEE PLUMBING DRAWINGS
FDS	FOLD-DOWN SEAT
GB	GRAB BAR
GB18	GRAB BAR 18" LONG (VERTICAL)
GB24	GRAB BAR 24" LONG (SIDE WALLS)
GB32	GRAB BAR 32" LONG (REAR WALLS)
GB36	GRAB BAR 36" LONG (REAR WALLS)
GB42	GRAB BAR 42" LONG (SIDE WALLS)
MI	MIRROR 24" X 36"
PT	PAPER TOWEL DISPENSER
SD	SOAP DISPENSER
SH	SHOWER HEAD
SR	SHOWER ROD
TD	67" ACCESSIBLE TURNING DIAMETER
TH	TOWEL HOOK
TTH	TOILET TISSUE HOLDER
US	UTILITY SHELF

NOTES:

1. PLUMBING CONTRACTOR TO PROVIDE PROTECTIVE INSULATION AT HOT PIPES BELOW LAVATORY PER ACCESSIBILITY CODE.
2. FLUSH CONTROL VALVES AT ACCESSIBLE TOILETS TO BE MOUNTED ON THE WIDE SIDE OF TOILET STALL OR ROOM.
3. SEE SPECIFICATIONS FOR DETAILS OF TOILET ACCESSORIES.
4. ALL TOILET PARTITIONS ARE FLOOR MOUNTED AND OVERHEAD BRACED.
5. SLOPE FLOOR TILE TO DRAIN WITH MUD BED. THRESHOLDS SLOPE IN DOOR OPENINGS SHALL NOT EXCEED 1:8 SLOPE OR 1/2" IN HEIGHT PER ACCESSIBILITY CODE.

Susan Hatchell
Landscape Architecture, PLLC
711 W. North Street, Raleigh, NC 27603
p: 919-838-9600 f: 919-838-9700

Esse Architects
630 PERSHING ROAD | RALEIGH, NORTH CAROLINA 27608

TOILET PLANS & ELEVATIONS

LAKE MYRA COUNTY PARK
Wake County, NC

REVISIONS

Esse Architects P.A. Registered Architectural Corporation 52498 North Carolina Raleigh, NC

MIRANDA DOWNER POTTHOFF Registered Architect 11663 North Carolina Raleigh, NC
Miranda Potthoff
7/27/2026

Date: 07/27/26

MF-A401

Docusign Envelope ID: 64A88F3C-582E-8A95-8091-A28AA91D843E

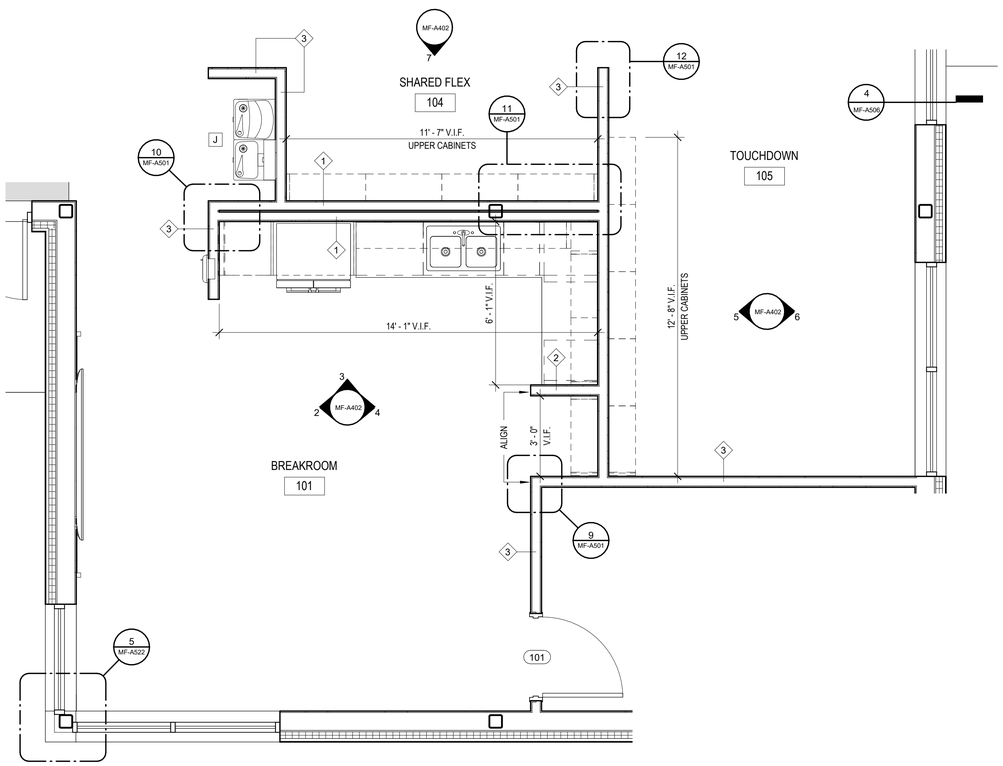

1 MF-A402 BREAKROOM, SHARED FLEX & TOUCHDOWN (101, 104, 105) - ENLARGED PLAN
3/8" = 1'-0"

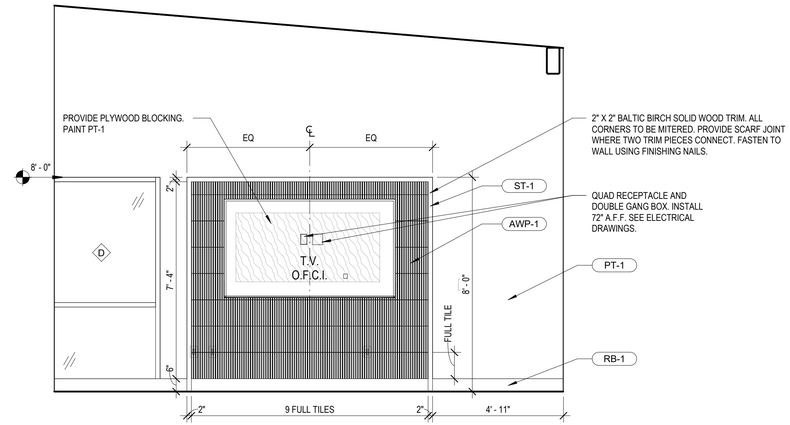

2 MF-A402 BREAKROOM (101) - WEST ELEVATION
3/8" = 1'-0"

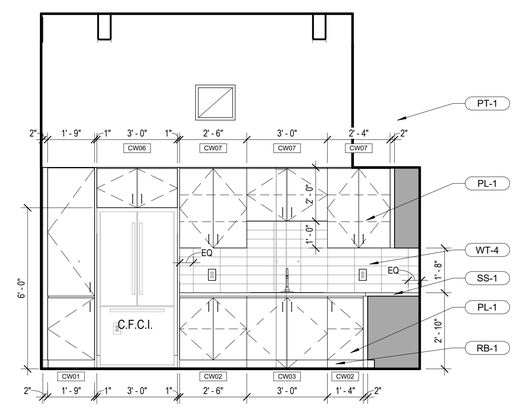

3 MF-A402 BREAKROOM (101) - NORTH ELEVATION
3/8" = 1'-0"

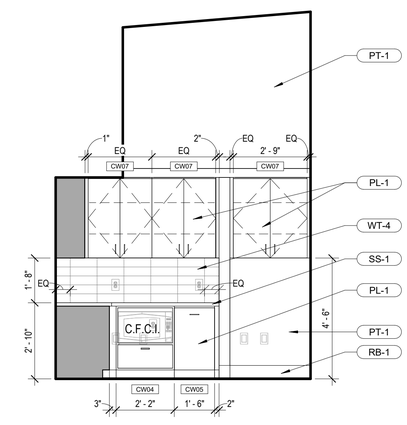

4 MF-A402 BREAKROOM (101) - EAST ELEVATION
3/8" = 1'-0"

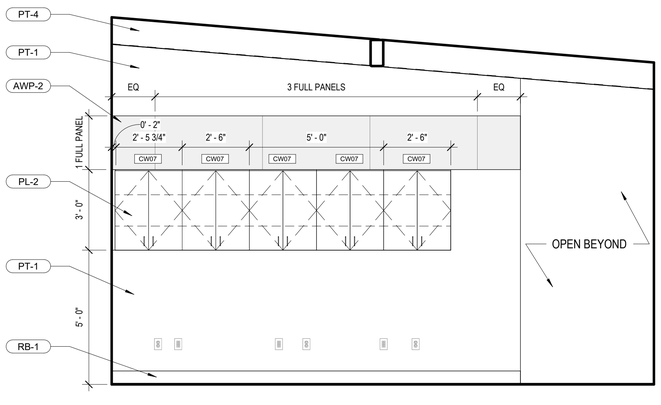

5 MF-A402 TOUCHDOWN (105) - WEST ELEVATION
3/8" = 1'-0"

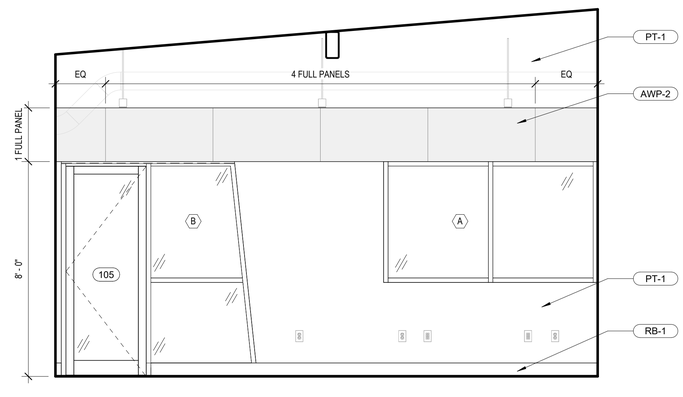

6 MF-A402 TOUCHDOWN (105) - EAST ELEVATION
3/8" = 1'-0"

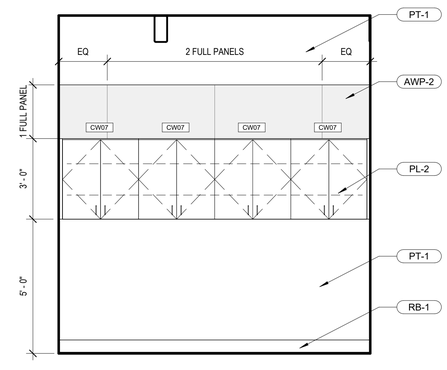

7 MF-A402 SHARED FLEX (104) - SOUTH ELEVATION
3/8" = 1'-0"

SYMBOL LEGEND

X-X	FINISH TAG
CWXX	CASEWORK TAG
#	PARTITION TAG

GENERAL CASEWORK NOTES

1. CASEWORK DIMENSIONS SHALL BE FIELD VERIFIED PRIOR TO UNIT FABRICATION AND INSTALLATION.
2. COUNTERTOPS, UNLESS OTHERWISE NOTED, SHALL HAVE A 4" HIGH BACKSPLASH AND SIDE SPLASH SCRIBED TO CONFORM TO THE SURFACE OF ABUTTING WALLS AT BACKS AND ENDS. COUNTERTOPS AND BACKSPLASH SHALL BE CAULKED TO THE WALL.
3. GC SHALL COORDINATE WITH CASEWORK FABRICATOR AND APPROPRIATE SUBCONTRACTORS FOR INSTALLATION OF PLUMBING FIXTURES AND EQUIPMENT WITH ASSOCIATED PIPING AND FITTINGS, AND FOR INSTALLATION OF ELECTRICAL RECEPTACLES, LIGHT FIXTURES, ETC. WITHIN THE CASEWORK.
4. PROVIDE WALL MOUNTED ANGLE SUPPORTS (FINISH TO MATCH THE COLOR AND MATERIAL OF ADJACENT WALL) WHERE NECESSARY FOR SUPPORT OF COUNTERTOPS ABOVE KNEE SPACES.
5. PROVIDE SCHEDULED BASE ALONG BOTTOM OF EXPOSED FRONTS, BACKS, SIDES, AND ENDS OF ALL AFFIXED CASEWORK, VERTICAL SUPPORTS, KNEE SPACES, ETC. (U.N.O.)
6. PROVIDE CONCEALED BLOCKING FOR MOUNTING OF ALL SHELVING, HOOKS, DISPENSERS, ETC.
7. ALL OPENINGS IN COUNTERS SHALL BE CUT IN, NOT SEAMED.

Susan Hatchell
Landscape Architecture, PLLC
711 W. North Street, Raleigh, NC 27603
p: 919-838-9600 f: 919-838-9700

Esse Architects
830 PERSHING ROAD | RALEIGH, NORTH CAROLINA 27608

INTERIOR ELEVATIONS

LAKE MYRA COUNTY PARK
Wake County, NC

REVISIONS

Esse Architects P.A. Registered Architectural Corporation 52498 North Carolina Raleigh, NC

MIRANDA DOWNER POTTHOFF Registered Architect 11663 Signature: Miranda Potthoff DocuSign Envelope ID: 1EC94A8A-0E24-4B4E-7/27/2026 North Carolina Raleigh, NC

Date: 07/27/26

MF-A402

Docusign Envelope ID: 64A88F3C-582E-8A95-8091-A28AA91D843E

R-VALUE CALCULATION
STANDING SEAM ROOF ON METAL DECK

INTERIOR AIR FILM	R-0.68
2" WOOD ROOF DECK	R-1.88
1 LAYER PLYWOOD	R-0.62
POLYISO INSULATION	R-43.2
ICE AND WATER SHIELD	N/A
0.040 ALUMINUM PANELS	R-0.61
EXTERIOR AIR FILM	R-0.17
TOTAL R-VALUE Ri =	R-47.16
TOTAL U-VALUE 1/Rt =	U-0.02
REQUIRED U-VALUE =	U-0.032

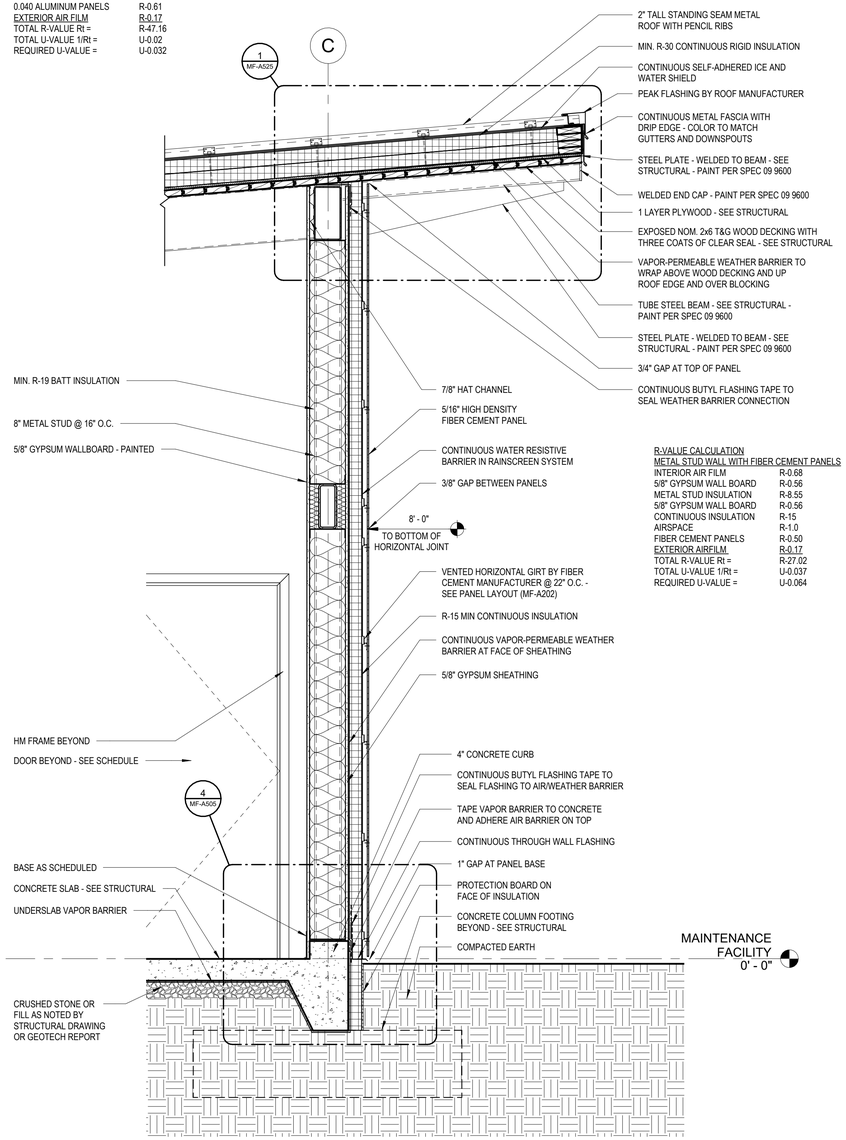

R-VALUE CALCULATION
METAL STUD WALL WITH FIBER CEMENT PANELS

INTERIOR AIR FILM	R-0.68
5/8" GYPSUM WALL BOARD	R-0.56
METAL STUD INSULATION	R-8.55
5/8" GYPSUM WALL BOARD	R-0.56
CONTINUOUS INSULATION	R-15
AIRSPACE	R-1.0
FIBER CEMENT PANELS	R-0.50
EXTERIOR AIRFILM	R-0.17
TOTAL R-VALUE Ri =	R-27.92
TOTAL U-VALUE 1/Ri =	U-0.037
REQUIRED U-VALUE =	U-0.064

1 MF-A421 TYP. MAINTENANCE FACILTY - WALL SECTION
3/4" = 1'-0"

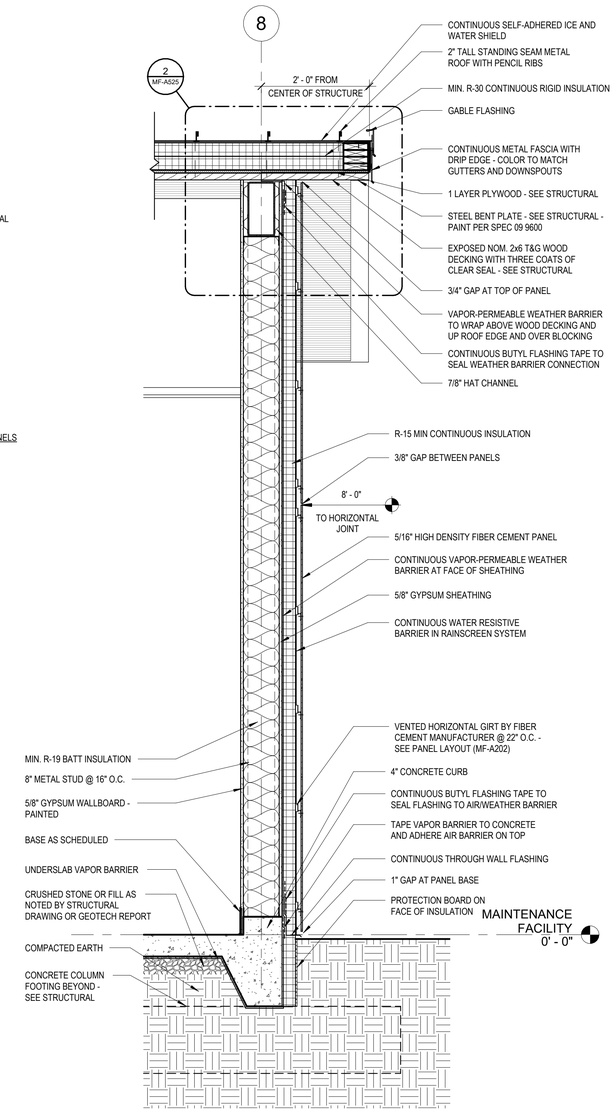

2 MF-A421 WALL SECTION @ TELECOM
3/4" = 1'-0"

ROOF DECKING NOTES

1. STRUCTURAL WOOD ROOF DECK IS ALSO FINISHED CEILING - **NO FASTENERS SHALL PENETRATE DECKING**
2. NO EXPOSED CONDUIT SHALL BE RUN ACROSS UNDERSIDE OF WOOD DECKING WITHOUT REVIEW AND COORDINATION WITH THE ARCHITECT. COORDINATE FOR LIGHTING, SECURITY, ETC.

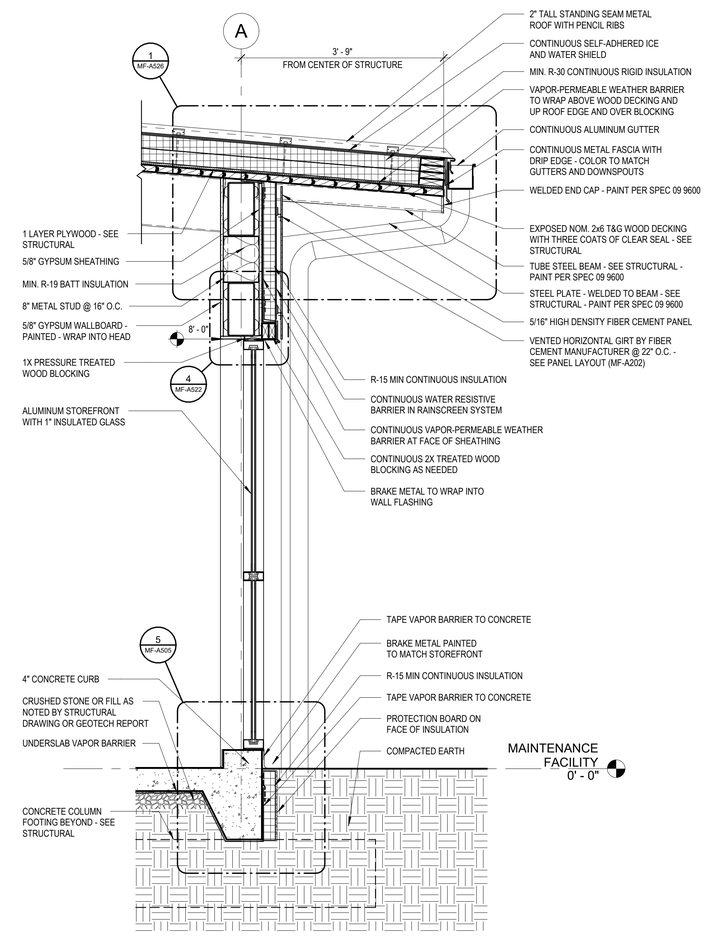

3 MF-A421 WALL SECTION @ STAFF OFFICE
3/4" = 1'-0"

Susan Hatchell Landscape Architecture, PLLC
711 W. North Street, Raleigh, NC 27603
p: 919-838-9600 f: 919-838-9700

Esse Architects
820 PERSHING ROAD | RALEIGH, NORTH CAROLINA 27608

WALL SECTIONS

LAKE MYRA COUNTY PARK
Wake County, NC

REVISIONS

Esse Architects P.A. Registered Architectural Corporation 52498 North Carolina Raleigh, NC

MIRANDA DOWNER POTHOFF Registered Architect 11663 Licensed North Carolina Raleigh, NC 7/27/2026

Date: 07/27/26

MF-A421

Docusign Envelope ID: 64A88F3C-582E-8A95-8091-A28AA91D843E

ROOF DECKING NOTES

1. STRUCTURAL WOOD ROOF DECK IS ALSO FINISHED CEILING - **NO FASTENERS SHALL PENETRATE DECKING**
2. NO EXPOSED CONDUIT SHALL BE RUN ACROSS UNDERSIDE OF WOOD DECKING WITHOUT REVIEW AND COORDINATION WITH THE ARCHITECT. COORDINATE FOR LIGHTING, SECURITY, ETC.

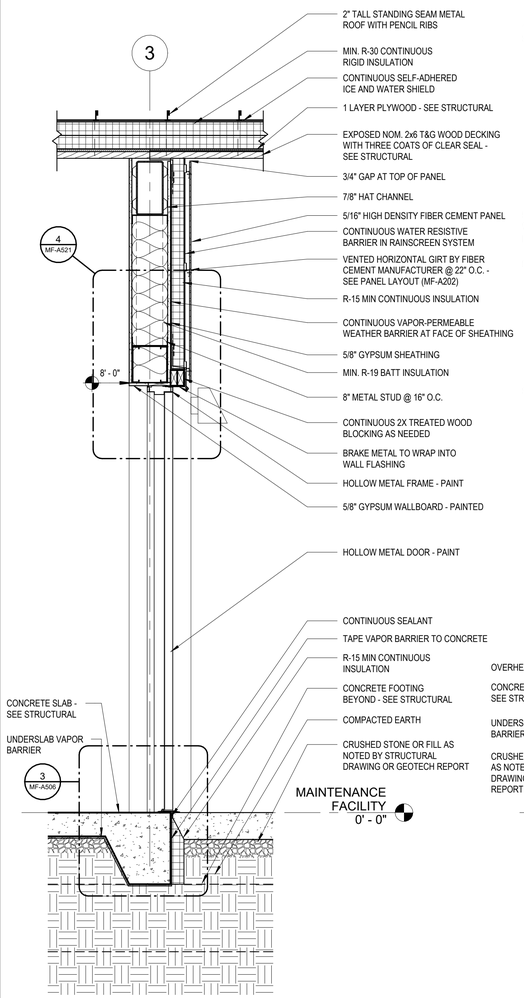

1 MF-A422 WALL SECTION @ DOOR 107C
3/4" = 1'-0"

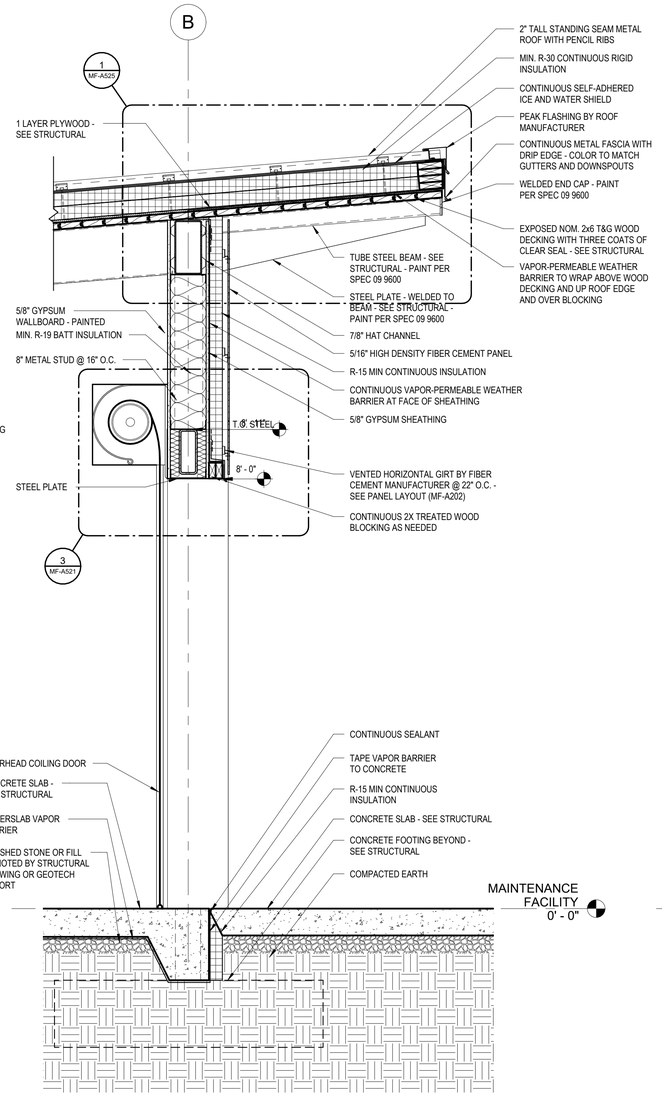

2 MF-A422 WALL SECTION @ OVERHEAD DOOR
3/4" = 1'-0"

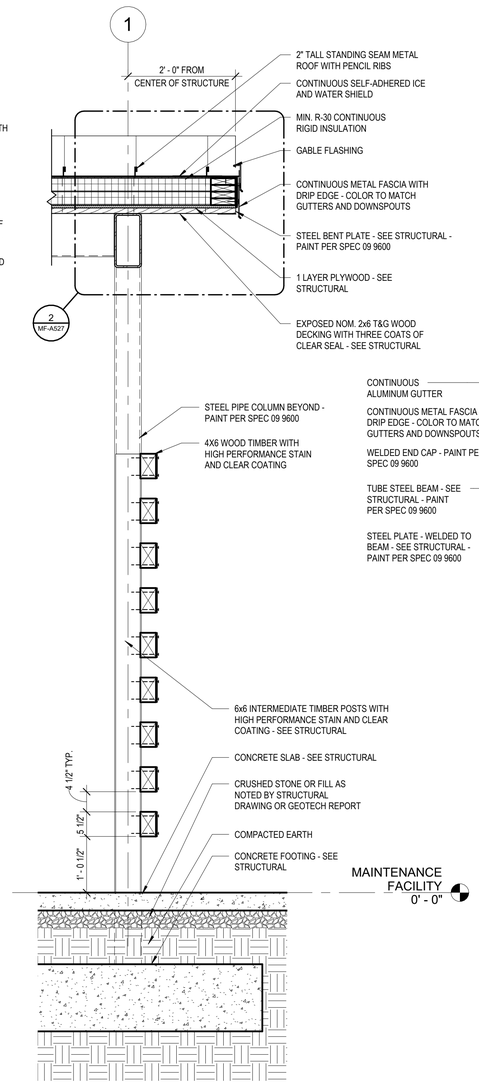

3 MF-A422 WALL SECTION @ SLAT WALL
3/4" = 1'-0"

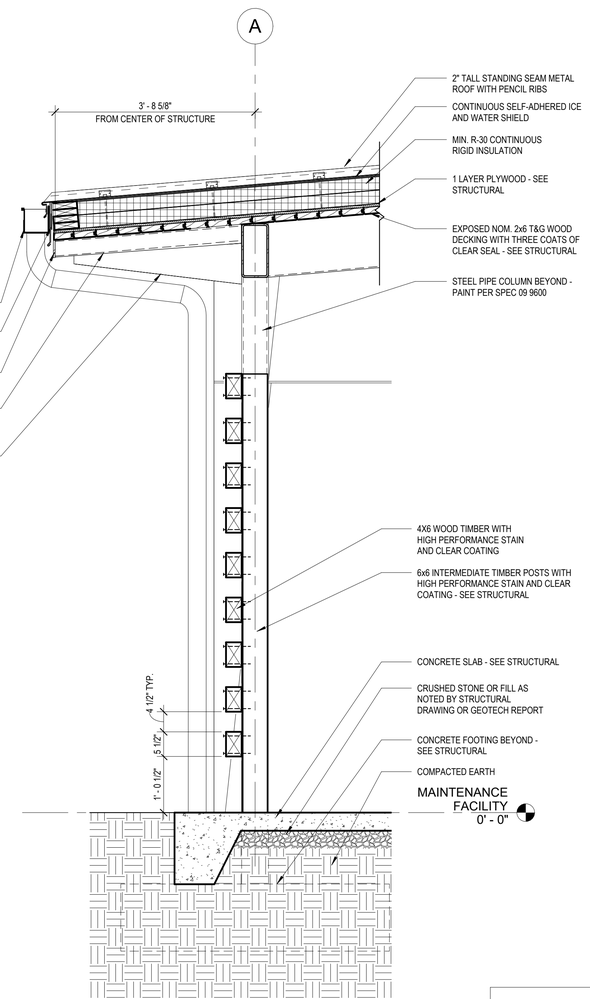

4 MF-A422 WALL SECTION @ WOOD SLAT WALL
3/4" = 1'-0"

Susan Hatchell
Landscape Architecture, PLLC
711 W. North Street, Raleigh, NC 27603
p: 919-838-9600 f: 919-838-9700

Esse Architects
820 PERSHING ROAD | RALEIGH, NORTH CAROLINA 27608

WALL SECTIONS

LAKE MYRA COUNTY PARK
Wake County, NC

REVISIONS

Esse Architects P.A. Registered Architectural Corporation 52498 North Carolina Raleigh, NC

MIRANDA DONNER POTTHOFF Registered Architect 11663 Signed by: Miranda Potthoff 7/27/2026 North Carolina Raleigh, NC

Date: 07/27/26

MF-A422

Docusign Envelope ID: 64A88F3C-582E-8A95-8091-A28AA91D843E

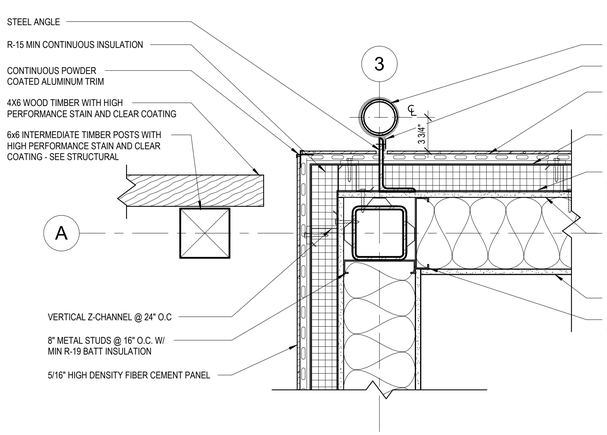

1 MF-A501 PLAN DETAIL @ EXTERIOR WALL & SLAT WALL
1 1/2" = 1'-0"

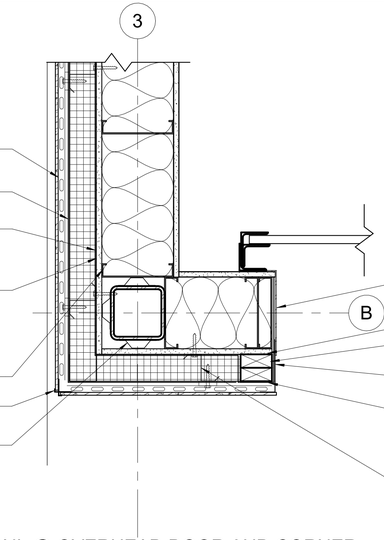

2 MF-A501 PLAN DETAIL @ OVERHEAD DOOR AND CORNER
1 1/2" = 1'-0"

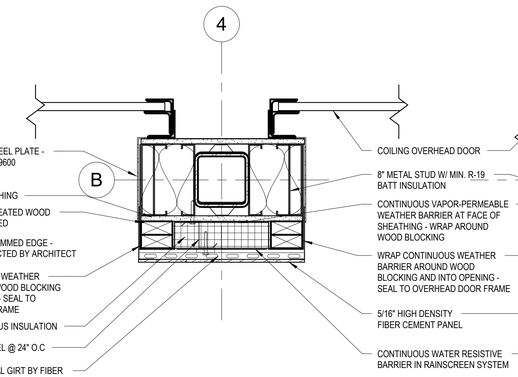

3 MF-A501 PLAN DETAIL @ OVERHEAD DOORS
1 1/2" = 1'-0"

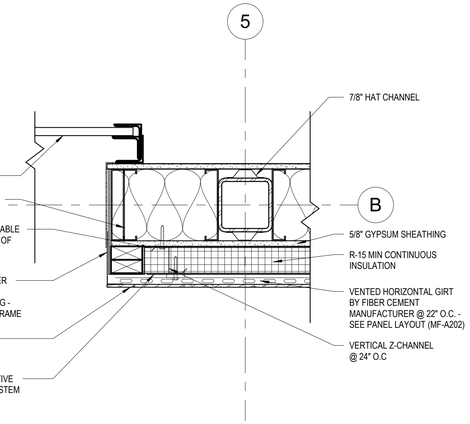

4 MF-A501 PLAN DETAIL @ OVERHEAD DOOR
1 1/2" = 1'-0"

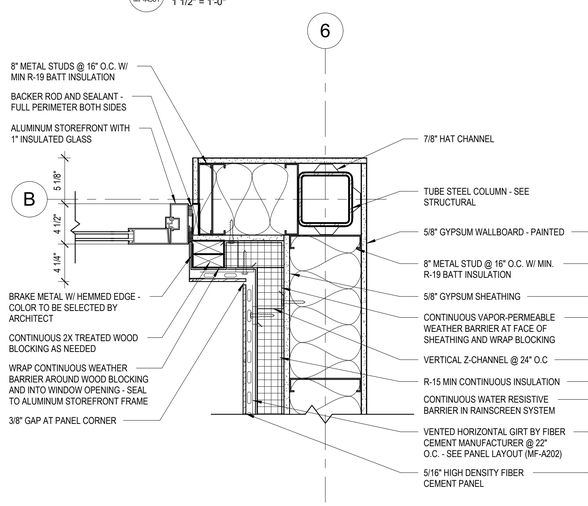

5 MF-A501 PLAN DETAIL @ EXT. DOOR AND INSIDE CORNER
1 1/2" = 1'-0"

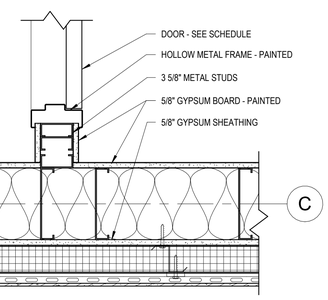

6 MF-A501 PLAN DETAIL @ INTERIOR WALL
1 1/2" = 1'-0"

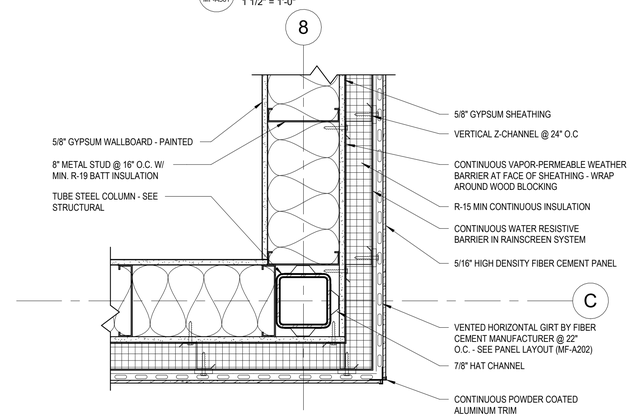

7 MF-A501 PLAN DETAIL @ TYP. OUTSIDE CORNER
1 1/2" = 1'-0"

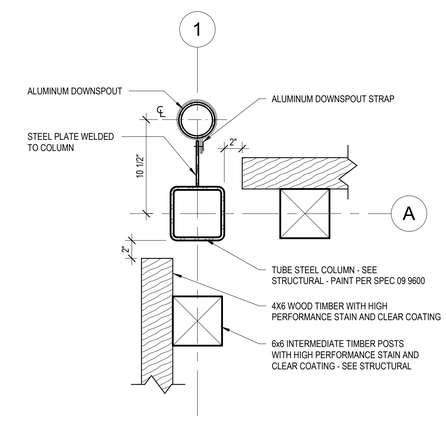

8 MF-A501 PLAN DETAIL @ SLAT WALL CORNER
1 1/2" = 1'-0"

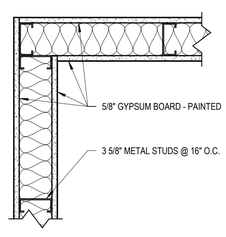

9 MF-A501 PLAN DETAIL @ INTERIOR CORNER
1 1/2" = 1'-0"

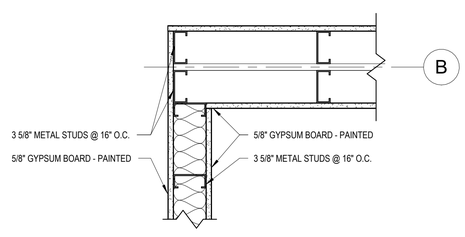

10 MF-A501 PLAN DETAIL @ PLUMBING WALL CORNER
1 1/2" = 1'-0"

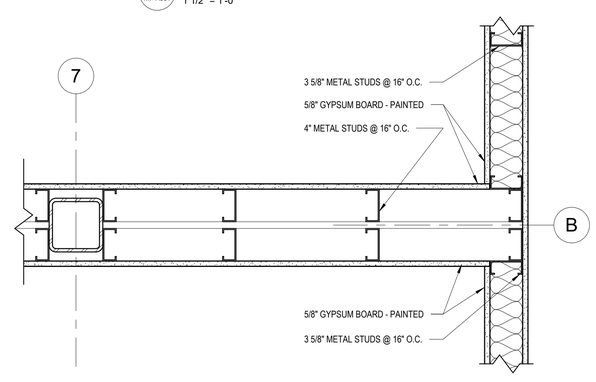

11 MF-A501 PLAN DETAIL @ PLUMBING WALL INTERSECTION
1 1/2" = 1'-0"

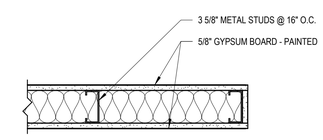

12 MF-A501 PLAN DETAIL @ INTERIOR WALL END
1 1/2" = 1'-0"

Susan Hatchell
Landscape Architecture, PLLC
711 W. North Street, Raleigh, NC 27603
p: 919-838-9600 f: 919-838-9700

Esse Architects
820 PERSHING ROAD | RALEIGH, NORTH CAROLINA 27608

PLAN DETAILS

LAKE MYRA COUNTY PARK
Wake County, NC

REVISIONS

Esse Architects P.A. Registered Architectural Corporation 52498 North Carolina Raleigh, NC

MIRANDA DONNER ROTHCHILD Registered Architect Surveyor 11663 North Carolina Raleigh, NC 7/27/2026

Date: 07/27/26

MF-A501

Docusign Envelope ID: 64A88F3C-582E-8A95-8091-A28AA91D843E

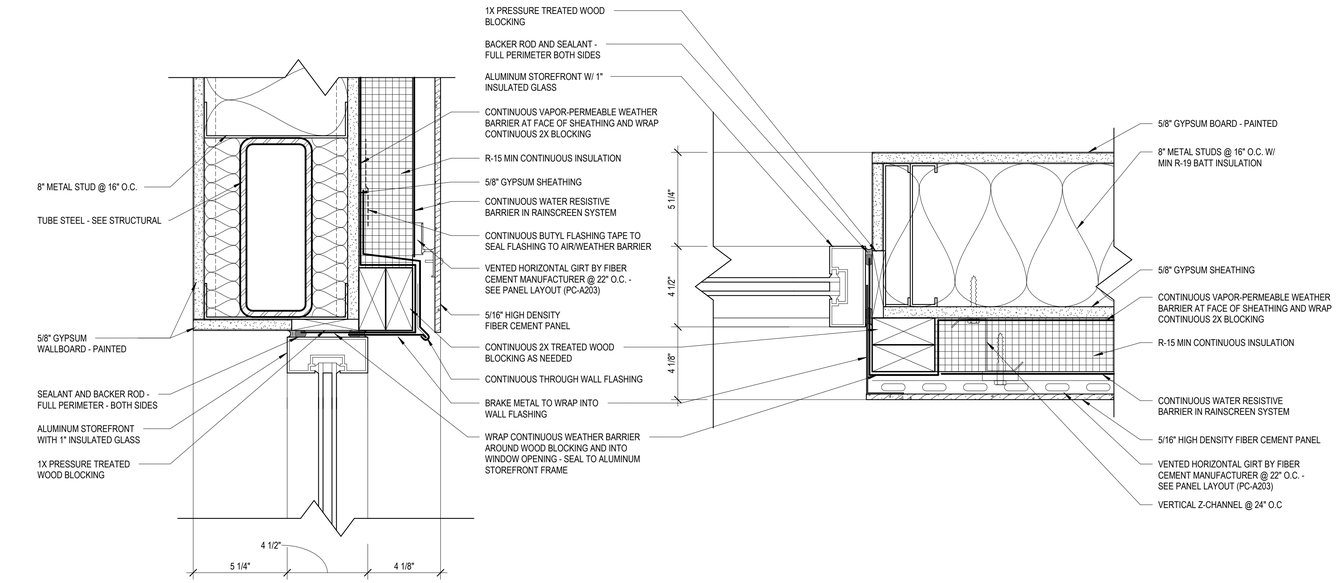

1 MF-A505 AIR BARRIER DETAIL @ WINDOW HEAD
3" = 1'-0"

2 MF-A505 AIR BARRIER DETAIL @ WINDOW JAMB
3" = 1'-0"

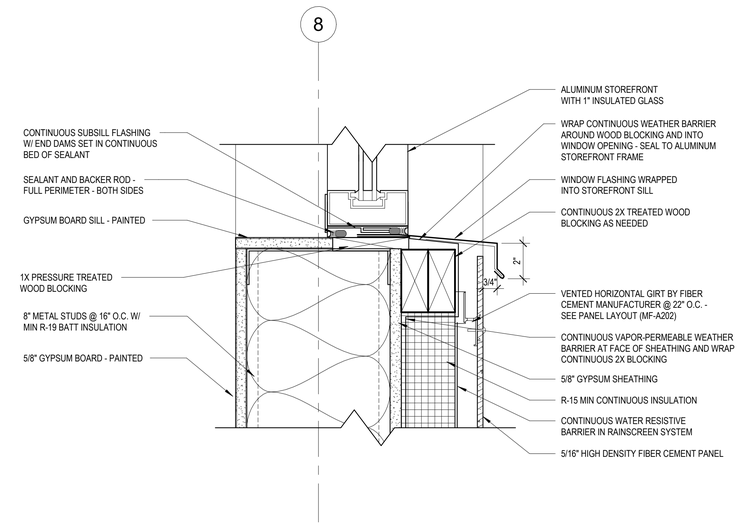

3 MF-A505 AIR BARRIER DETAIL @ WINDOW SILL
3" = 1'-0"

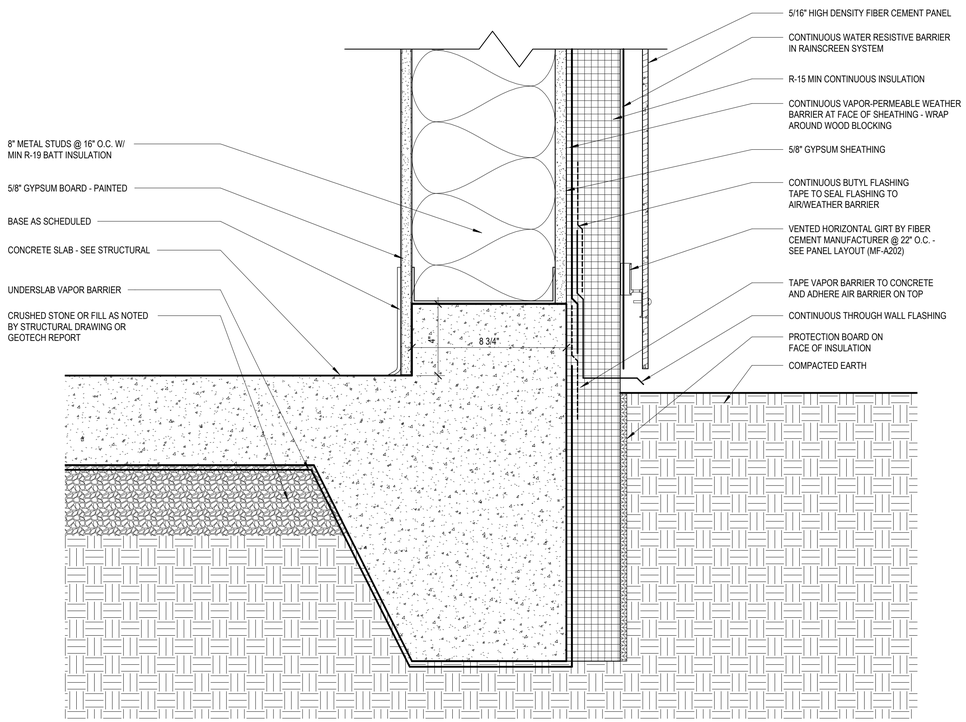

4 MF-A505 TYP. DETAIL @ BASE OF WALL
3" = 1'-0"

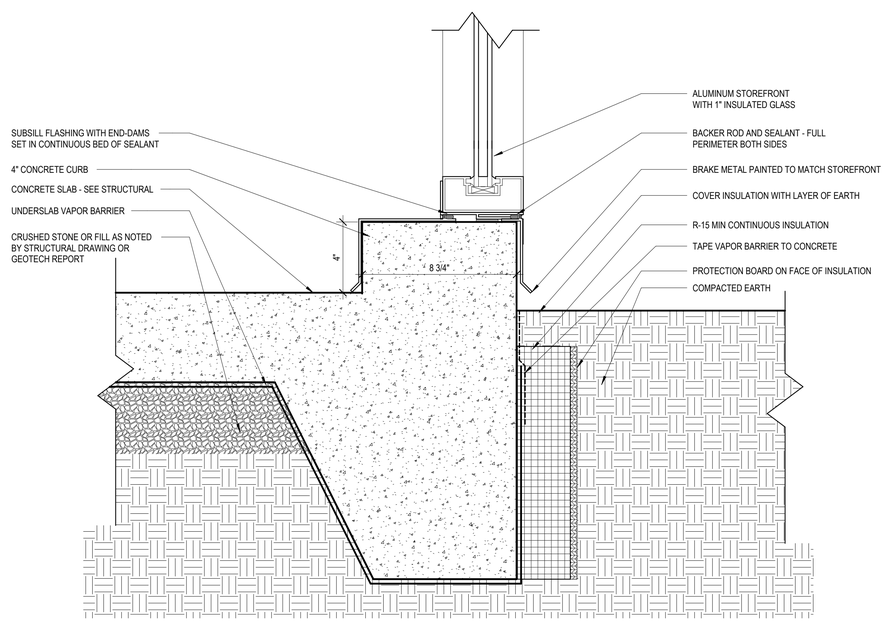

5 MF-A505 TYP. DETAIL @ BASE OF STOREFRONT
3" = 1'-0"

Susan Hatchell
Landscape Architecture, PLLC
711 W. North Street, Raleigh, NC 27603
p: 919-838-9600 f: 919-838-9700

Esse Architects
830 PERSHING ROAD | RALEIGH, NORTH CAROLINA 27608

AIR BARRIER DETAILS

LAKE MYRA COUNTY PARK
Wake County, NC

REVISIONS

Esse Architects P.A. Registered Architectural Corporation 52498 North Carolina Raleigh, NC

MIRANDA DOWNER POTTHOFF Registered Architect 11863 Miranda Potthoff NORTH CAROLINA 7/27/2026

Date: 07/27/26

MF-A505

Docusign Envelope ID: 64A88F3C-582E-8A95-8091-A28AA91D843E

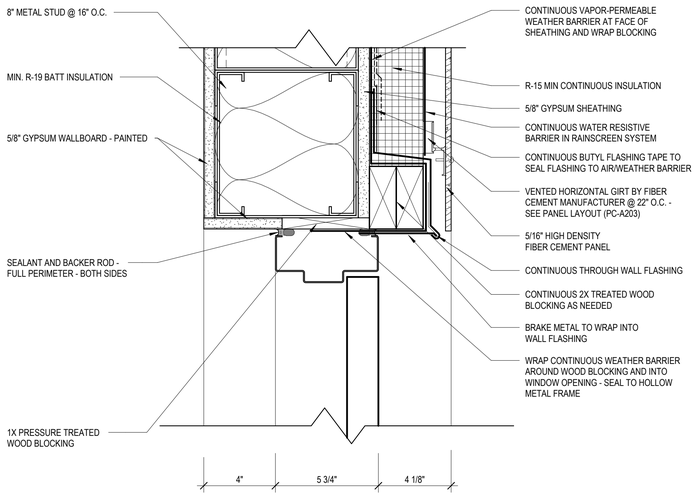

1 MF-A506 AIR BARRIER DETAIL @ HM DOOR HEAD
3" = 1'-0"

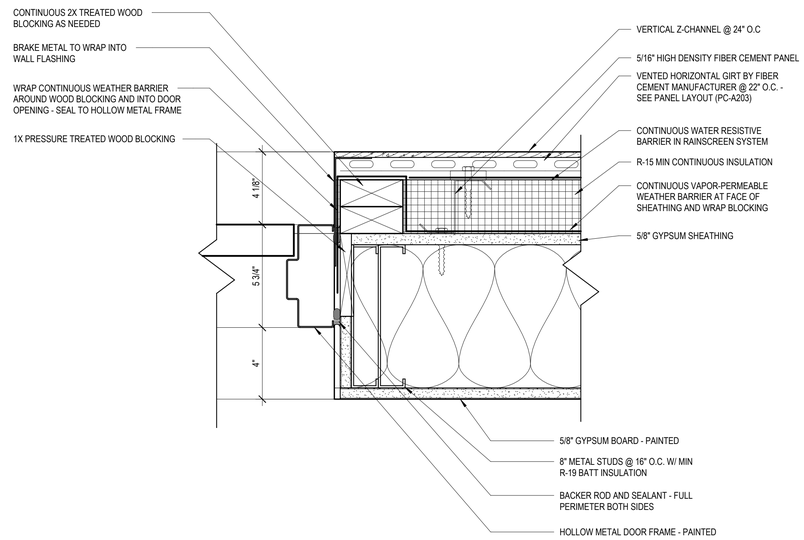

2 MF-A506 AIR BARRIER DETAIL @ HM DOOR JAMB
3" = 1'-0"

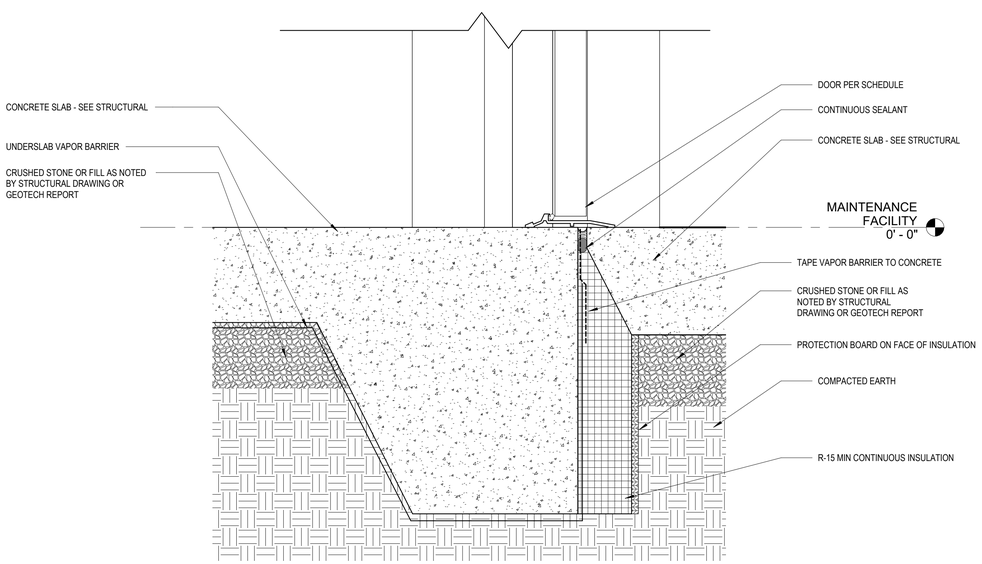

3 MF-A506 TYP. DETAIL @ BASE OF DOOR
3" = 1'-0"

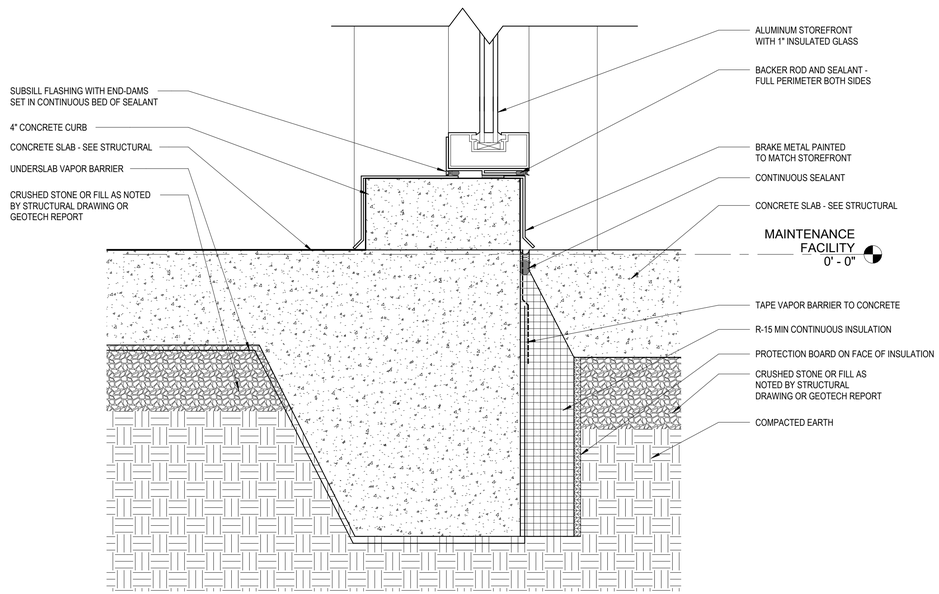

4 MF-A506 ENLARGED CURB DETAIL @ TYP. STOREFRONT
3" = 1'-0"

Susan Hatchell
Landscape Architecture, PLLC
711 W. North Street, Raleigh, NC 27603
p: 919-838-9600 f: 919-838-9700

Esse Architects
632 PERSHING ROAD | RALEIGH, NORTH CAROLINA 27608

AIR BARRIER DETAILS

LAKE MYRA COUNTY PARK
Wake County, NC

REVISIONS

Esse Architects P.A. Registered Architectural Corporation 52498 North Carolina Raleigh, NC

MIRANDA DONNER POTTHOFF Registered Architect 11663 North Carolina Raleigh, NC 7/27/2026

Date: 07/27/26

MF-A506

Docusign Envelope ID: 64A88F3C-582E-8A95-8091-A28AA91D843E

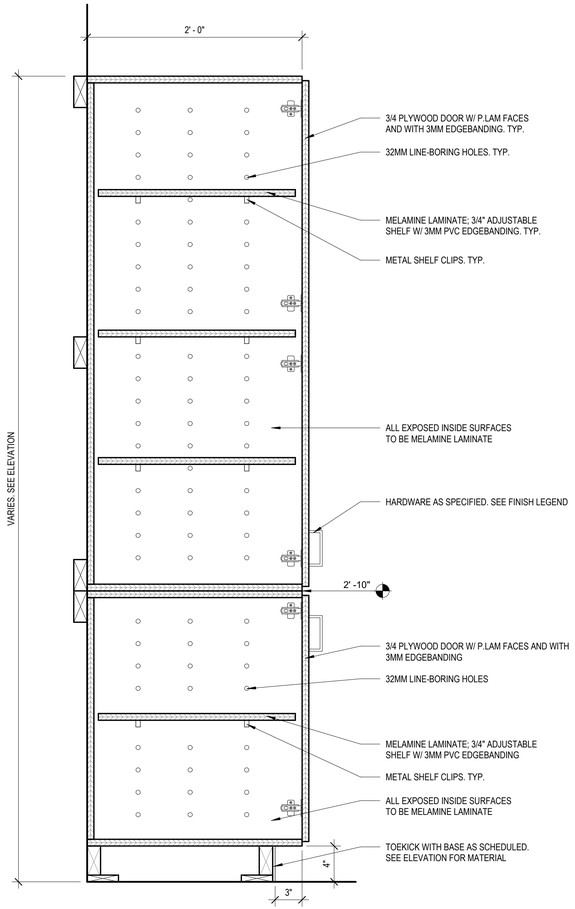

1 MF-A510 TYP. PANTRY W/ ADJUSTABLE SHELVING (CW01)
1 1/2" = 1'-0"

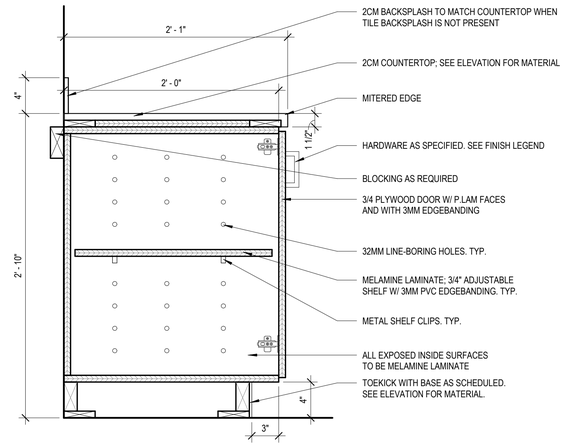

2 MF-A510 TYP. BASE CABINET W/ ADJUSTABLE SHELVING (CW02)
1 1/2" = 1'-0"

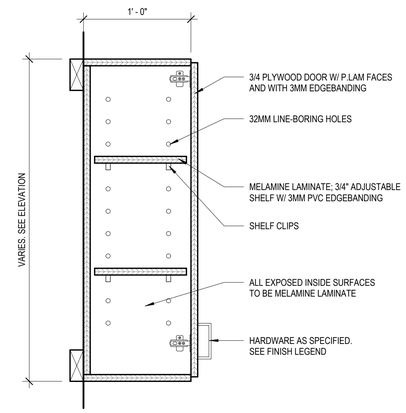

3 MF-A510 TYP. UPPER CABINET W/ SHELVING (CW07)
1 1/2" = 1'-0"

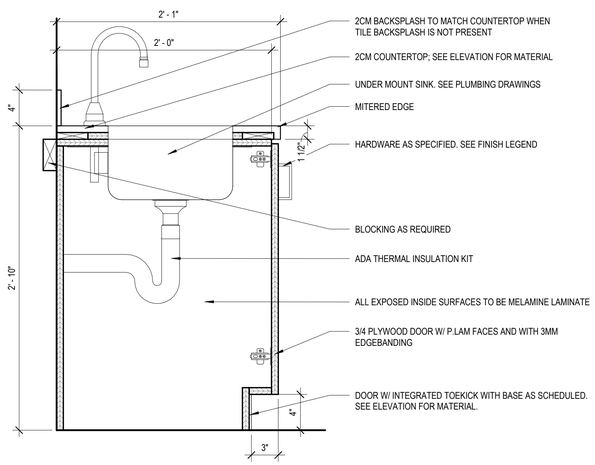

4 MF-A510 TYP. SINK W/ INTEGRATED TOE KICK (CW03)
1 1/2" = 1'-0"

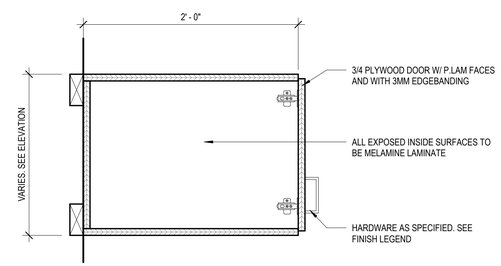

5 MF-A510 TYP. UPPER CABINET @ REFRIGERATOR (CW06)
1 1/2" = 1'-0"

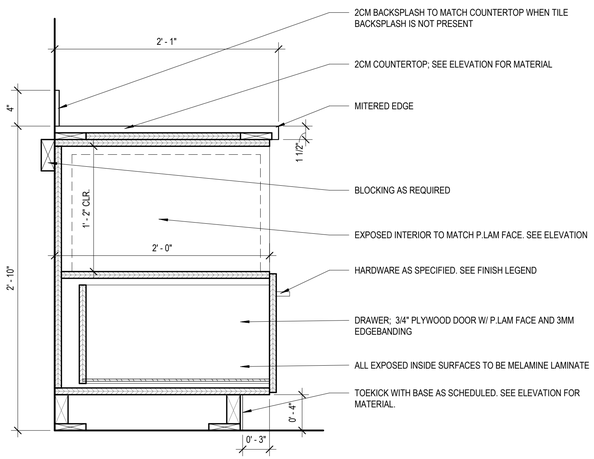

6 MF-A510 TYP. BASE CABINET W/ MICROWAVE SHELF (CW04)
1 1/2" = 1'-0"

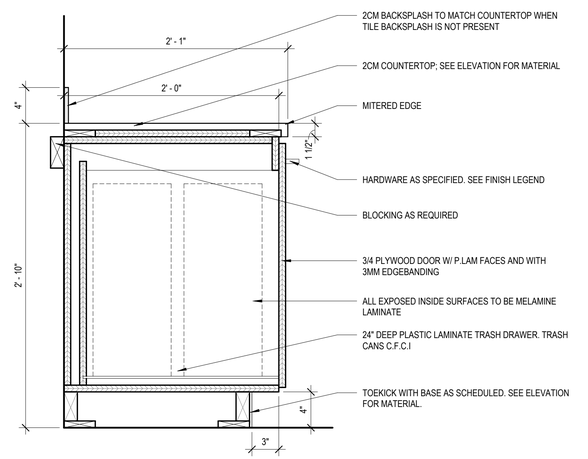

7 MF-A510 TYP. BASE CABINET W/ PULL OUT TRASH & RECYCLING (CW05)
1 1/2" = 1'-0"

Susan Hatchell
Landscape Architecture, PLLC
711 W. North Street, Raleigh, NC 27603
p: 919-838-9600 f: 919-838-9700

Esse Architects
630 PERSHING ROAD | RALEIGH, NORTH CAROLINA 27608

MILLWORK DETAILS

LAKE MYRA COUNTY PARK
Wake County, NC

REVISIONS

Esse Architects P.A. Registered Architectural Corporation 52498 North Carolina Raleigh, NC

MIRANDA DONNER POTTHOFF Registered Architect 11653 Miranda Potthoff North Carolina Raleigh, NC 7/27/2026

Date: 07/27/26

MF-A510

Docusign Envelope ID: 64A88F3C-582E-8A95-8091-A28AA91D843E

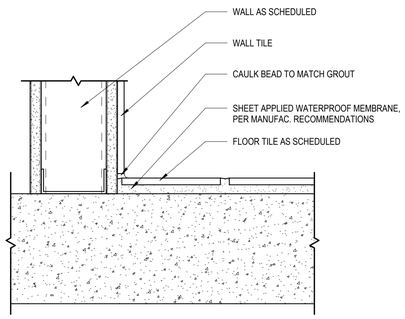

1 MF-A511 TYP. FLOOR TO WALL TILE TRANSITION
3" = 1'-0"

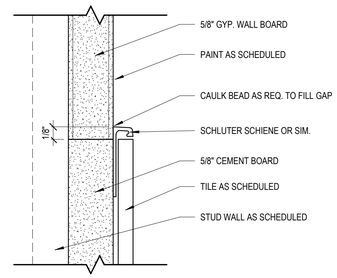

2 MF-A511 TYP. MID WALL TILE TERMINATION
12" = 1'-0"

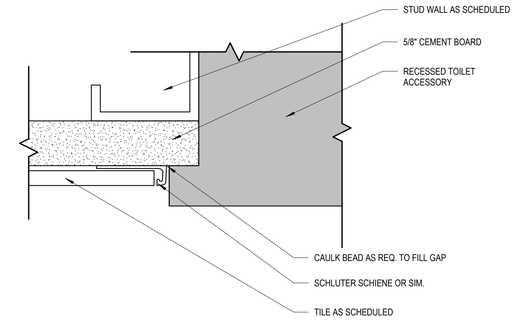

3 MF-A511 TYP. TILE TERMINATION @ TOILET ACCESSORY
12" = 1'-0"

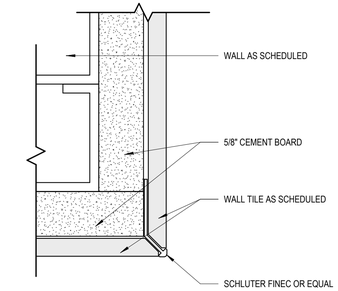

4 MF-A511 TYP. WALL TILE OUTSIDE CORNER
12" = 1'-0"

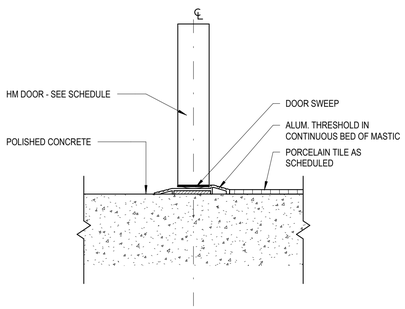

5 MF-A511 TRANSITION - CONCRETE TO TILE
3" = 1'-0"

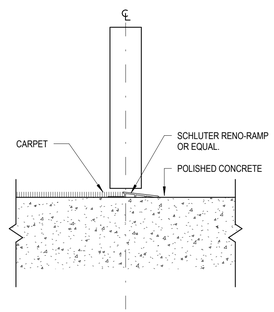

6 MF-A511 TRANSITION - CARPET TO CONCRETE
3" = 1'-0"

Susan Hatchell
Landscape Architecture, PLLC
711 W. North Street, Raleigh, NC 27603
p: 919-838-9600 f: 919-838-9700

Esse Architects
630 PERSHING ROAD | RALEIGH, NORTH CAROLINA 27608

INTERIOR DETAILS

LAKE MYRA COUNTY PARK
Wake County, NC

REVISIONS

Esse Architects P.A. Registered Architectural Corporation 52498 North Carolina Raleigh, NC

MIRANDA DOWNER POTTHOFF Registered Architect 11663 Miranda Potthoff North Carolina Raleigh, NC 7/27/2026

Date: 07/27/26

MF-A511

Docusign Envelope ID: 64A88F3C-582E-8A95-8091-A28AA91D843E

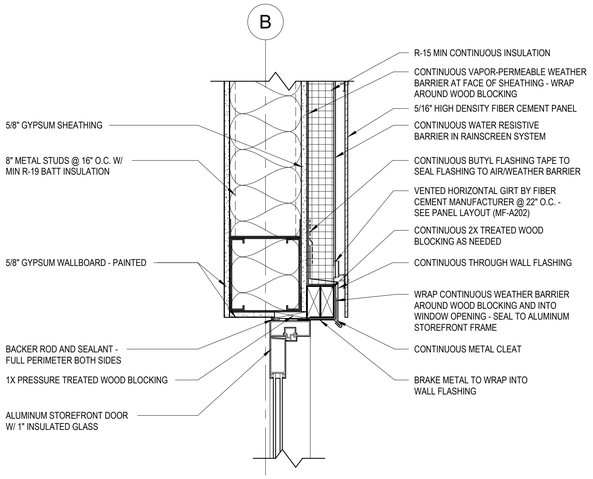

1 MF-A521 HEAD DETAIL @ MAINTENANCE ENTRY
1 1/2" = 1'-0"

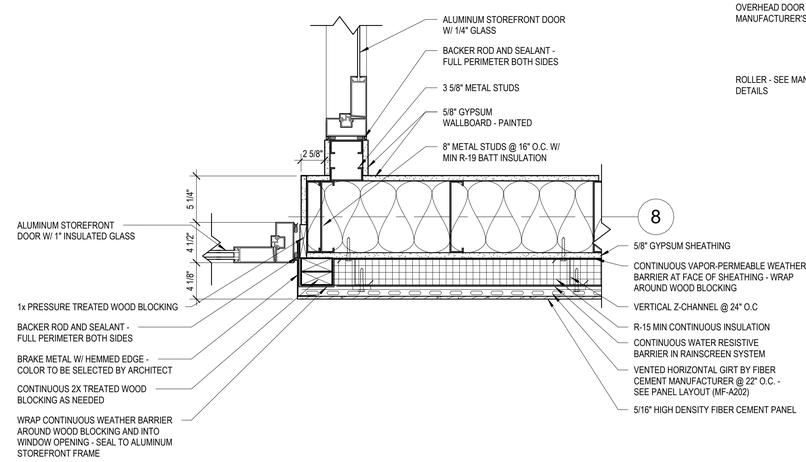

2 MF-A521 JAMB DETAIL @ DOORS 105 & 106
1 1/2" = 1'-0"

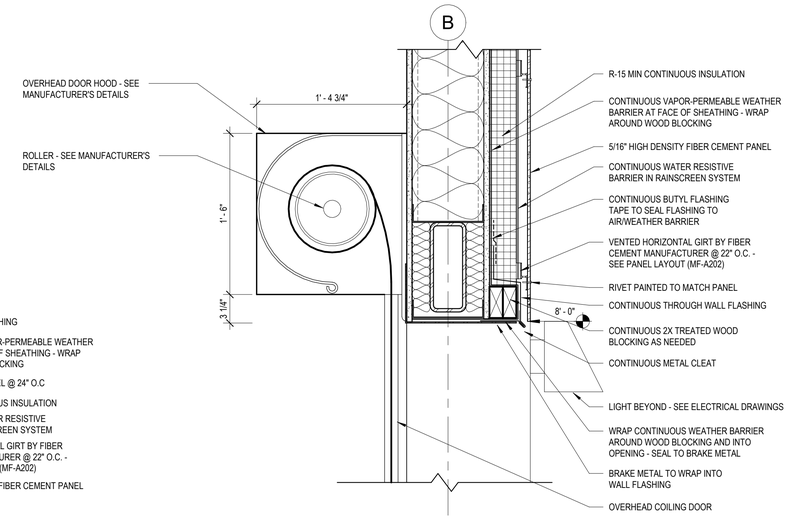

3 MF-A521 HEAD DETAIL @ OVERHEAD DOOR
1 1/2" = 1'-0"

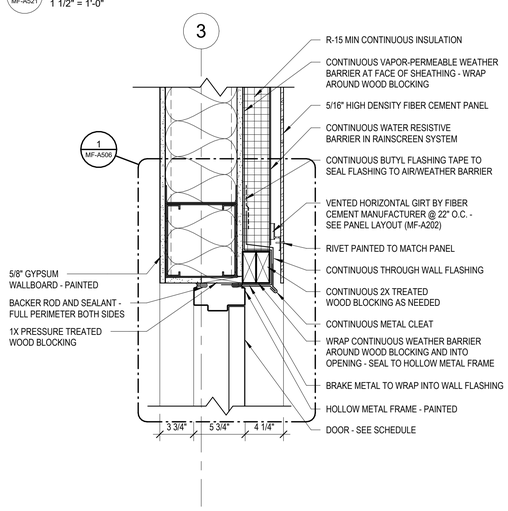

4 MF-A521 HEAD DETAIL @ EXTERIOR DOOR
1 1/2" = 1'-0"

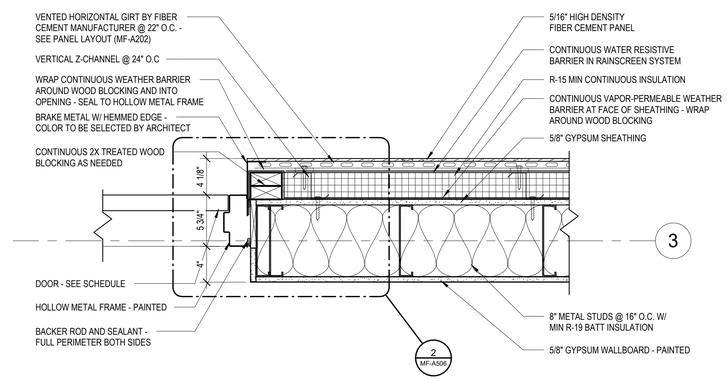

5 MF-A521 JAMB DETAIL @ HM EXTERIOR DOOR
1 1/2" = 1'-0"

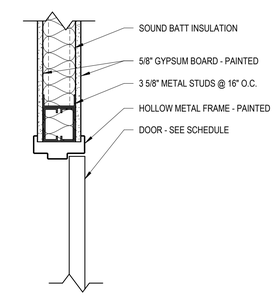

6 MF-A521 HEAD DETAIL @ INTERIOR DOOR
1 1/2" = 1'-0"

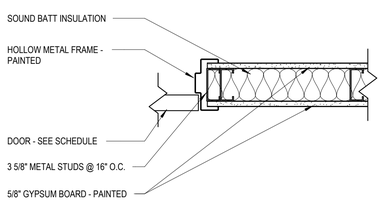

7 MF-A521 JAMB DETAIL @ INTERIOR DOOR
1 1/2" = 1'-0"

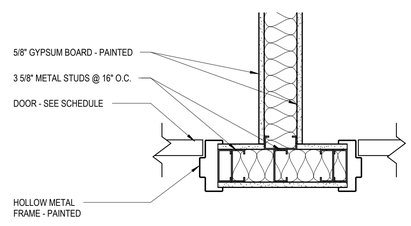

8 MF-A521 JAMB DETAIL @ CLOSE PROXIMITY DOORS
1 1/2" = 1'-0"

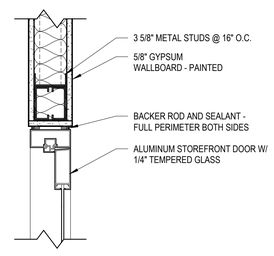

9 MF-A521 HEAD DETAIL @ OFFICE DOOR
1 1/2" = 1'-0"

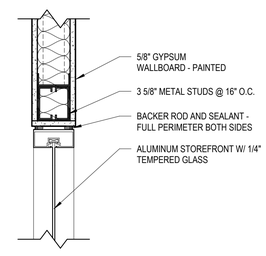

10 MF-A521 HEAD DETAIL @ OFFICE SIDELIGHT
1 1/2" = 1'-0"

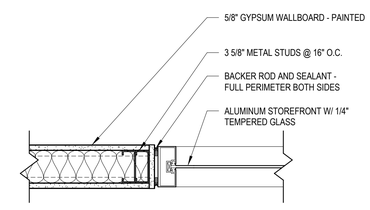

11 MF-A521 JAMB DETAIL @ OFFICE SIDELIGHT
1 1/2" = 1'-0"

Susan Hatchell
Landscape Architecture, PLLC
711 W. North Street, Raleigh, NC 27603
p: 919-838-9600 f: 919-838-9700

Esse Architects
832 PERSHING ROAD | RALEIGH, NORTH CAROLINA 27608

HEAD, JAMB AND SILL DETAILS

LAKE MYRA COUNTY PARK
Wake County, NC

REVISIONS

Esse Architects P.A. Registered Architectural Corporation 52498 North Carolina Raleigh, NC

MIRANDA DONNER POTTHOFF Registered Architect 11663 Miranda Potthoff North Carolina Raleigh, NC 7/27/2026

Date: 07/27/26

MF-A521

Docusign Envelope ID: 64A88F3C-582E-8A95-8091-A28AA91D843E

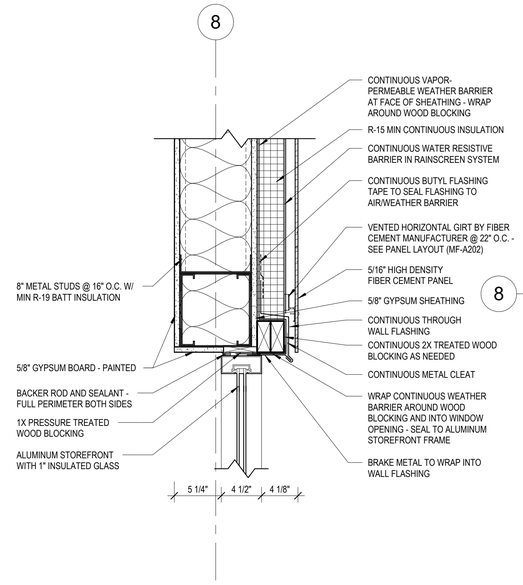

1 MF-A522 HEAD DETAIL @ TYP. WINDOW
1 1/2" = 1'-0"

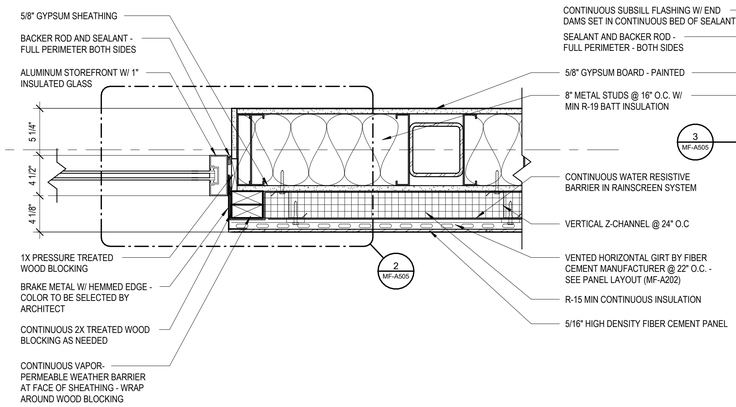

2 MF-A522 JAMB DETAIL @ TYP. WINDOW
1 1/2" = 1'-0"

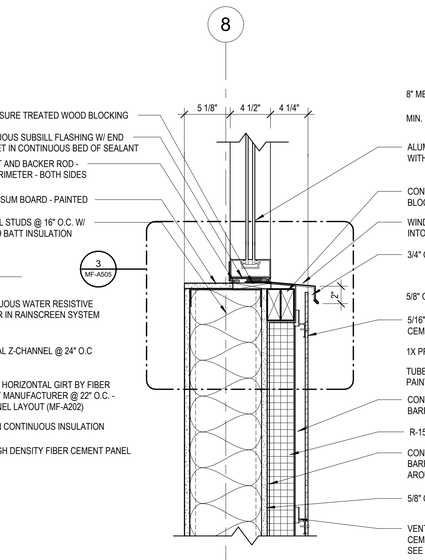

3 MF-A522 SILL DETAIL @ HALF HEIGHT WINDOW
1 1/2" = 1'-0"

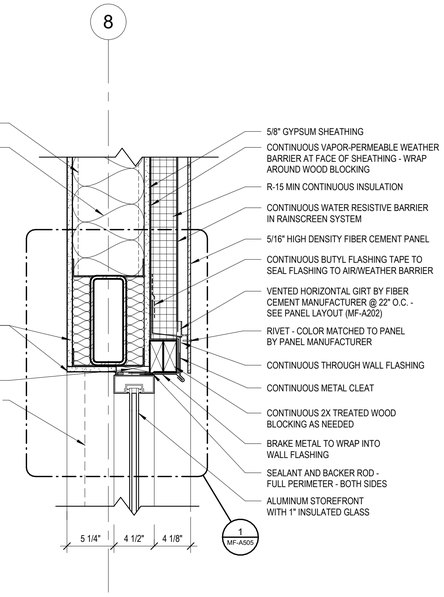

4 MF-A522 HEAD DETAIL @ 90 DEGREE WINDOW
1 1/2" = 1'-0"

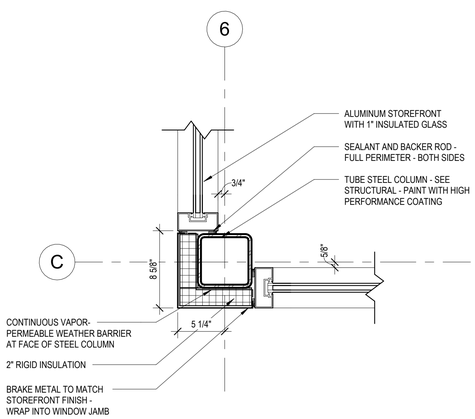

5 MF-A522 JAMB DETAIL @ 90 DEGREE WINDOW
1 1/2" = 1'-0"

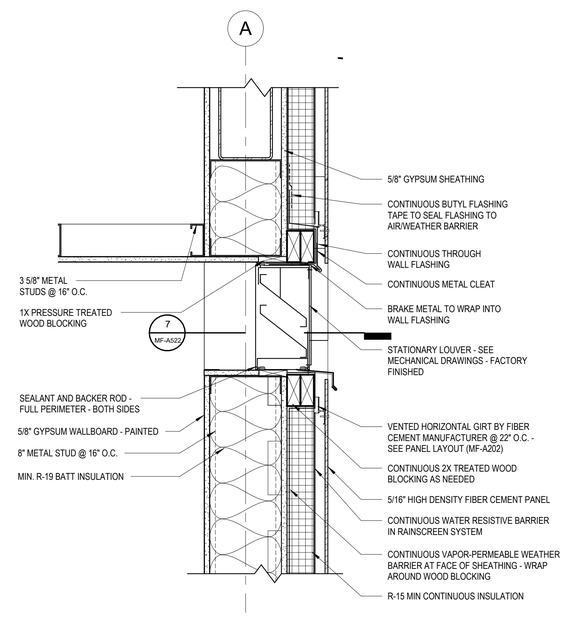

6 MF-A522 DETAIL @ WALL LOUVER
1 1/2" = 1'-0"

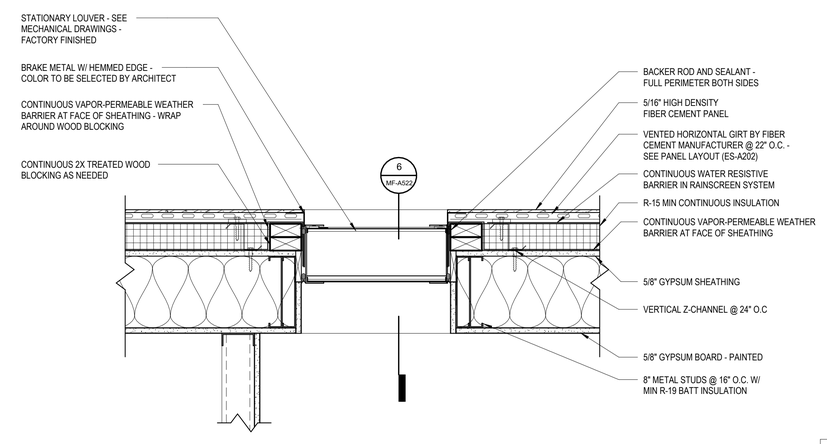

7 MF-A522 LOUVER PLAN DETAIL
1 1/2" = 1'-0"

Susan Hatchell
Landscape Architecture, PLLC
711 W. North Street, Raleigh, NC 27603
p: 919-838-9600 f: 919-838-9700

Esse Architects
ESS PERSONNEL LEAD | RALEIGH, NORTH CAROLINA 27608

HEAD, JAMB AND SILL DETAILS

LAKE MYRA COUNTY PARK
Wake County, NC

REVISIONS

Esse Architects P.A. 52498 Registered Architectural Corporation North Carolina Raleigh, NC

MIRANDA DOWNER POTTHOFF Registered Architect 11863 Licensed in Georgia, Illinois, North Carolina Raleigh, NC 7/27/2026

Date: 07/27/26

MF-A522

Docusign Envelope ID: 64A88F3C-582E-8A95-8091-A28AA91D843E

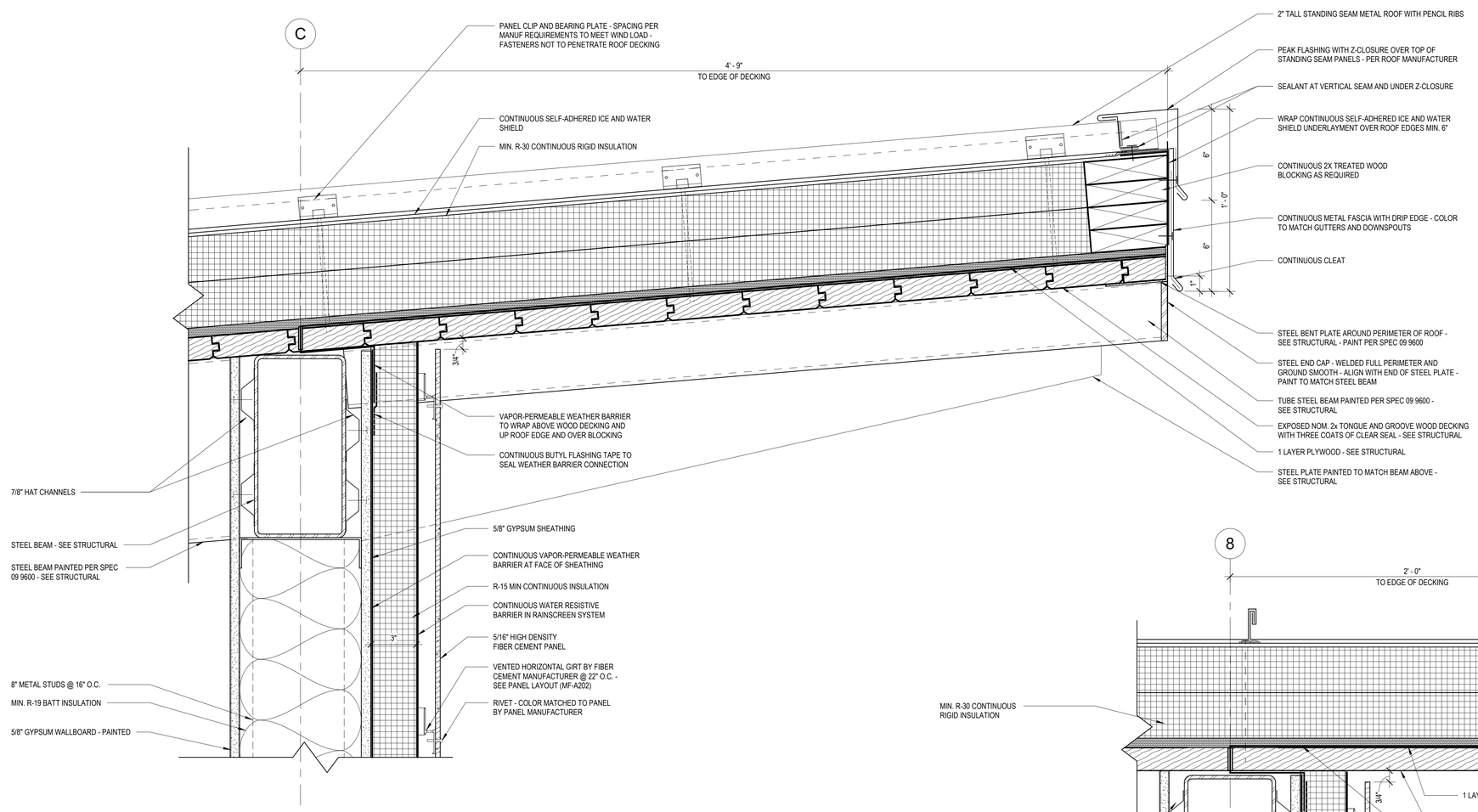

1 MF-A525 ROOF DETAIL @ UPPER SIDE
3" = 1'-0"

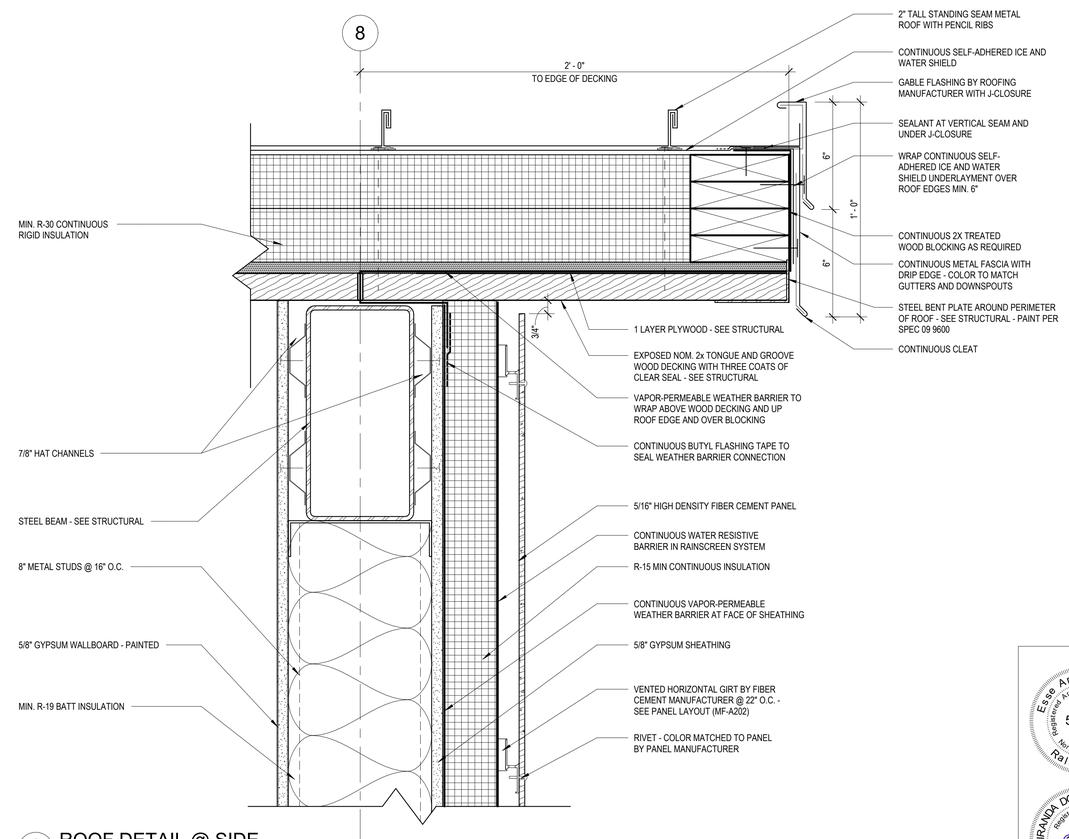

2 MF-A525 ROOF DETAIL @ SIDE
3" = 1'-0"

ROOF DECKING NOTES

1. STRUCTURAL WOOD ROOF DECK IS ALSO FINISHED CEILING - **NO FASTENERS SHALL PENETRATE DECKING**
2. NO EXPOSED CONDUIT SHALL BE RUN ACROSS UNDERSIDE OF WOOD DECKING WITHOUT REVIEW AND COORDINATION WITH THE ARCHITECT. COORDINATE FOR LIGHTING, SECURITY, ETC.

Susan Hatchell
Landscape Architecture, PLLC
711 W. North Street, Raleigh, NC 27603
p: 919-838-9600 f: 919-838-9700

Esse Architects
630 PERSHING ROAD | RALEIGH, NORTH CAROLINA 27608

ROOF DETAILS

LAKE MYRA COUNTY PARK
Wake County, NC

REVISIONS

Esse Architects P.A. Registered Architectural Corporation 52498 North Carolina Raleigh, NC

MIRANDA DOWNER POTTHOFF Registered Architect 11663 Expires 12/31/2026 North Carolina Raleigh, NC
Miranda Potthoff
7/27/2026

Date: 07/27/26

MF-A525

Docusign Envelope ID: 64A88F3C-582E-8A95-8091-A28AA91D843E

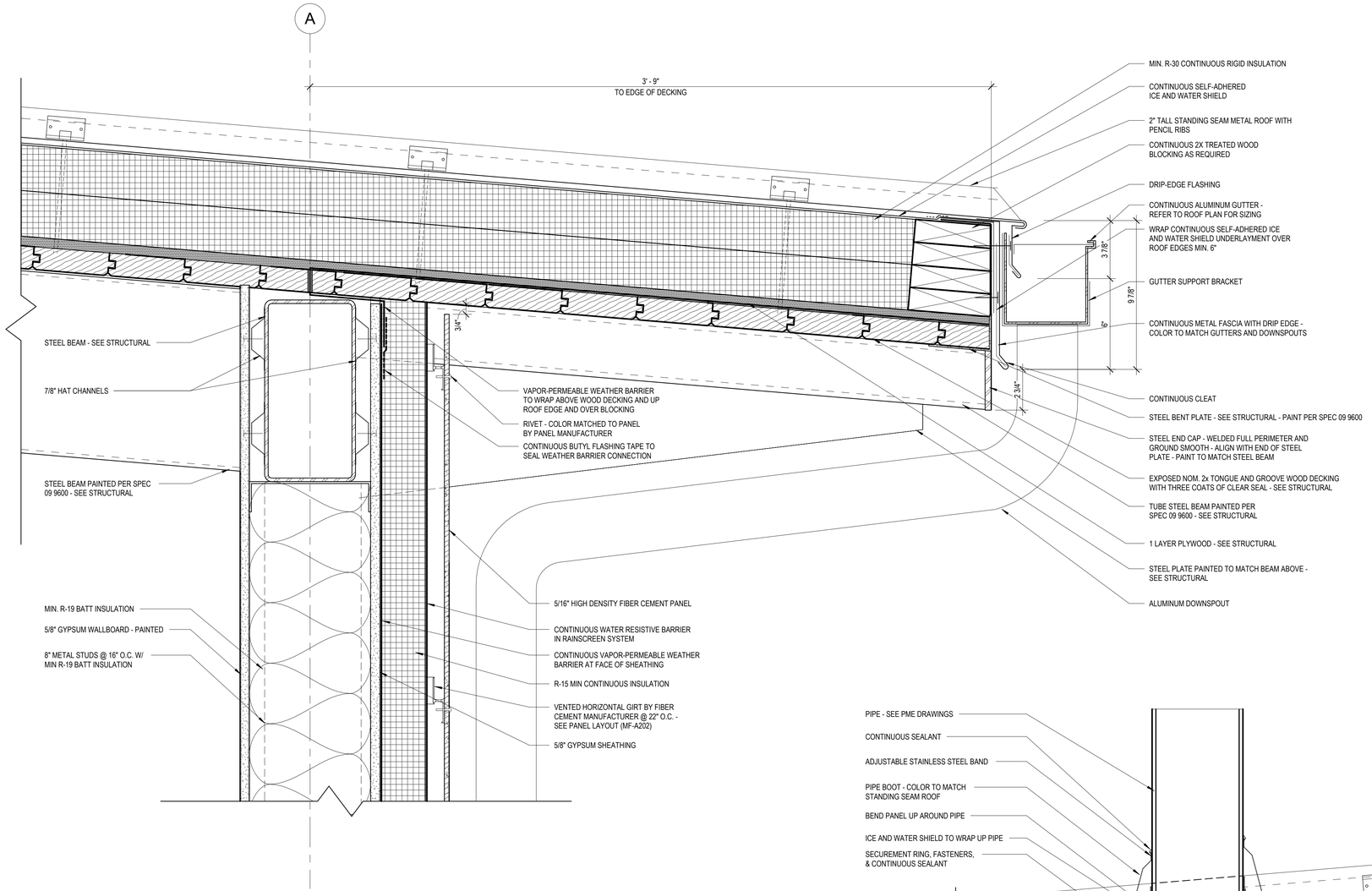

1 MF-A526 ROOF DETAIL @ LOW SIDE
3" = 1'-0"

ROOF DECKING NOTES

1. STRUCTURAL WOOD ROOF DECK IS ALSO FINISHED CEILING - **NO FASTENERS SHALL PENETRATE DECKING**
2. NO EXPOSED CONDUIT SHALL BE RUN ACROSS UNDERSIDE OF WOOD DECKING WITHOUT REVIEW AND COORDINATION WITH THE ARCHITECT. COORDINATE FOR LIGHTING, SECURITY, ETC.

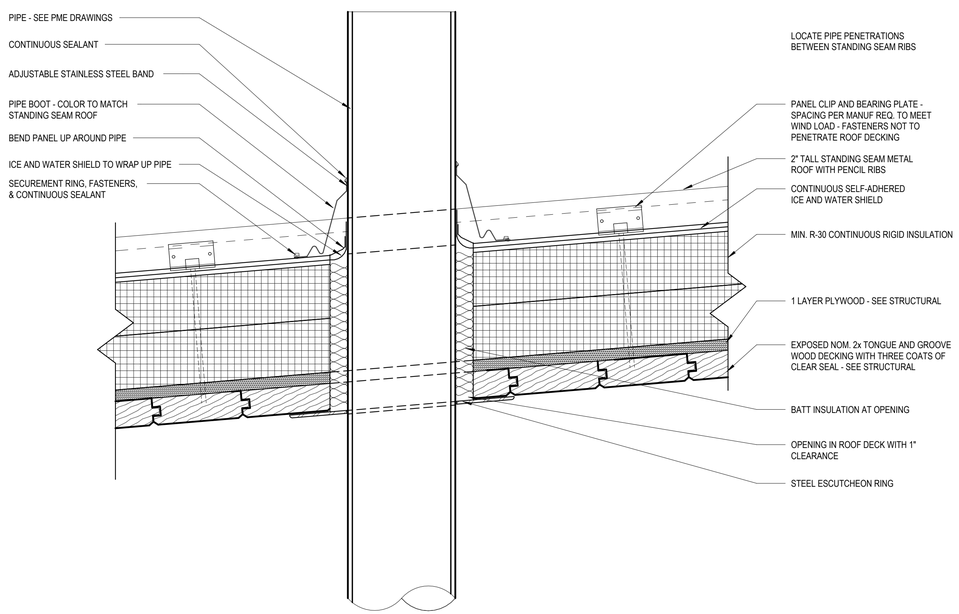

2 MF-A526 ROOF DETAIL @ PENETRATION
3" = 1'-0"

Susan Hatchell
Landscape Architecture, PLLC
711 W. North Street, Raleigh, NC 27603
p: 919-838-9600 f: 919-838-9700

Esse Architects
620 PERSHING ROAD | RALEIGH, NORTH CAROLINA 27608

ROOF DETAILS

LAKE MYRA COUNTY PARK
Wake County, NC

REVISIONS

Esse Architects P.A. Registered Architectural Corporation 52498 North Carolina Raleigh, NC

MIRANDA DONNER ROTHOFF Registered Architect 11663 Miranda Rothoff IECS4BMBCS23485 North Carolina Raleigh, NC 7/27/2026

Date: 07/27/26

MF-A526

Docusign Envelope ID: 64A88F3C-582E-8A95-8091-A28AA91D843E

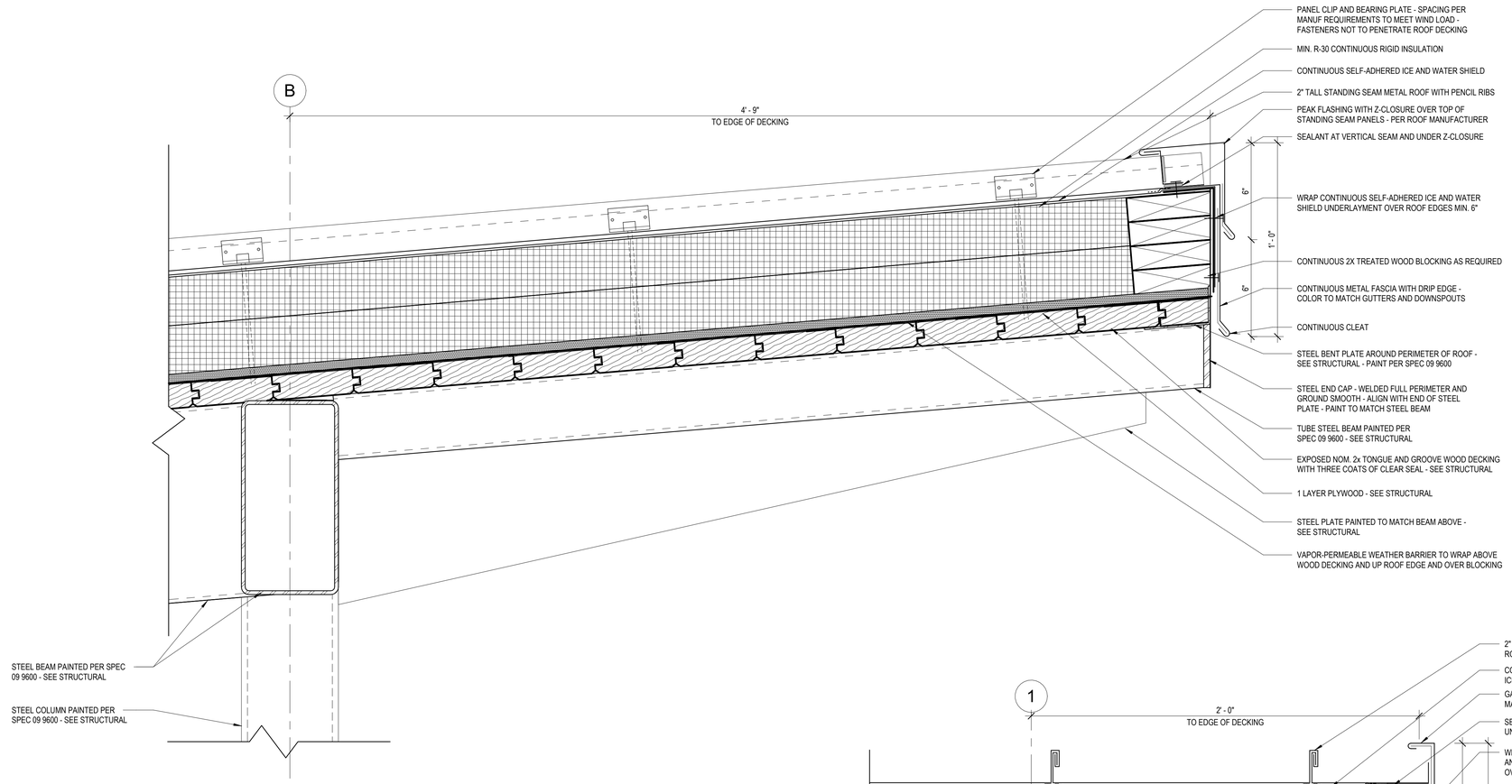

1 MF-A527 ROOF DETAIL @ OUTDOOR BAYS HIGH SIDE
3" = 1'-0"

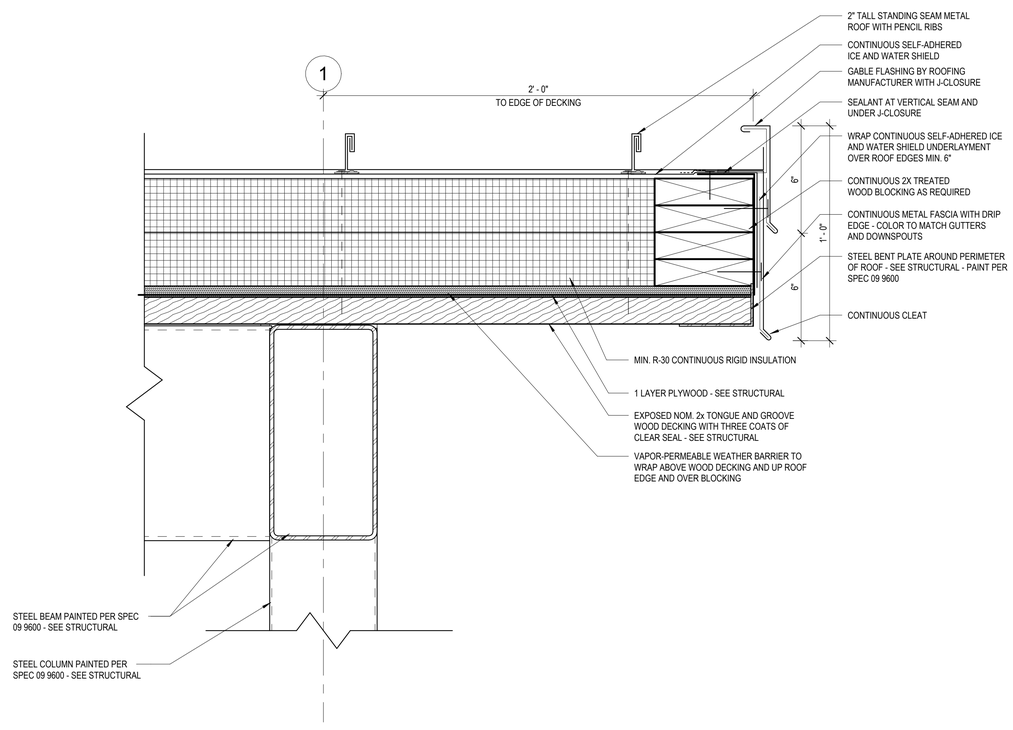

2 MF-A527 ROOF DETAIL @ OUTDOOR BAYS SIDE
3" = 1'-0"

ROOF DECKING NOTES

1. STRUCTURAL WOOD ROOF DECK IS ALSO FINISHED CEILING - **NO FASTENERS SHALL PENETRATE DECKING**
2. NO EXPOSED CONDUIT SHALL BE RUN ACROSS UNDERSIDE OF WOOD DECKING WITHOUT REVIEW AND COORDINATION WITH THE ARCHITECT. COORDINATE FOR LIGHTING, SECURITY, ETC.

Susan Hatchell
Landscape Architecture, PLLC
711 W. North Street, Raleigh, NC 27603
p: 919-838-9600 f: 919-838-9700

Esse Architects
632 PERSHING ROAD | RALEIGH, NORTH CAROLINA 27608

ROOF DETAILS

LAKE MYRA COUNTY PARK
Wake County, NC

REVISIONS

Esse Architects P.A. 52498 Registered Architectural Corporation North Carolina Raleigh, NC

MIRANDA DONNER POTTHOFF Registered Architect 11663 Signature Miranda Potthoff 7/27/2026 Raleigh, NC

Date: 07/27/26

MF-A527

Docusign Envelope ID: 64A88F3C-582E-8A95-8091-A28AA91D843E

MAINTENANCE FACILITY DOOR SCHEDULE

	DOOR					FRAME			DETAIL					
NUMBER	HEIGHT	WIDTH	MATERIAL	FINISH	ELEVATION	MATERIAL	FINISH	ELEVATION	HEAD	JAMB	SILL	HW Set	RATING	COMMENTS
100	7' - 10"	3' - 0"	AL	PT-5	B	AL	PT-5	1	1/MF-A521	5/MF-A501	1/MF-A601	MF - 2.0		EXTERIOR DOOR, CARD READER
101	7' - 0"	3' - 0"	WD	ST-1	D	HM	PT-4	1	6/MF-A521	7/MF-A521	-	MF - 5.0		CARD READER
102	7' - 0"	3' - 0"	WD	ST-1	D	HM	PT-4	1	6/MF-A521	7/MF-A521	5/MF-A511	MF - 8.0		
103	7' - 0"	3' - 0"	WD	ST-1	D	HM	PT-4	1	6/MF-A521	7/MF-A521	-	MF - 6.0		
105	7' - 10"	3' - 0"	AL	PT-5	B	AL	PT-5	B/MF-A601	1/MF-A521	2/MF-A521	1/MF-A601	MF - 2.0		EXTERIOR DOOR, CARD READER, KEYPAD
106	7' - 0"	3' - 0"	WD	ST-1	F	AL	PT-5	E/MF-A601	9/MF-A521	2/MF-A521	-	MF - 4.0		
107	7' - 0"	3' - 0"	WD	ST-1	E	HM	PT-4	1	6/MF-A521	7/MF-A521	-	MF - 7.0		
107A	8' - 0"	10' - 0"	HM	PT-3	C	-	PT-3	-	3/MF-A521	4/MF-A501 3/MF-A501	3/MF-A601	MF - 9.0		OVERHEAD DOOR, DOOR CONTACT, PAINT TO BE SEMI-GLOSS FINISH - FACTORY FINISHED
107B	8' - 0"	10' - 0"	HM	PT-3	C	-	PT-3	-	3/MF-A521	3/MF-A501 2/MF-A501	3/MF-A601	MF - 9.0		OVERHEAD DOOR, DOOR CONTACT, PAINT TO BE SEMI-GLOSS FINISH - FACTORY FINISHED
107C	7' - 10"	3' - 0"	HM	PT-3	A	HM	PT-3	1	4/MF-A521	5/MF-A521	2/MF-A601	MF - 3.0		EXTERIOR DOOR, CARD READER, PAINT TO BE SEMI-GLOSS FINISH

DOOR HARDWARE NOTES:
1. CARD READERS, DOOR CONTACTS, AND POWER SUPPLIES TO BE BY THE OWNER'S SECURITY VENDOR.
2. THE BALANCE OF DOOR HARDWARE IS IN THE GENERAL CONTRACTOR'S SCOPE.
3. DOORS WITH CARD READERS WILL ALSO RECEIVE DOOR CONTACTS.

DOOR ELEVATIONS

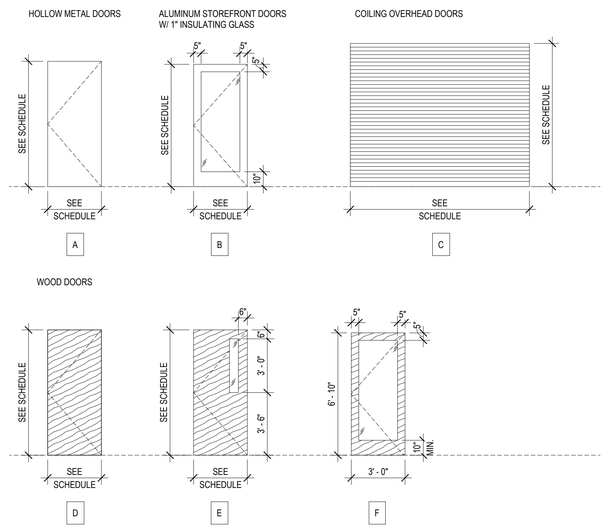

FRAME ELEVATIONS

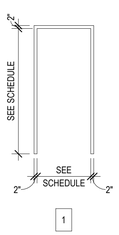

GENERAL GLAZING NOTES

1. ALL EXTERIOR GLAZING TO BE 1" INSULATED GLASS W/ LOW-E AND ARGON FILL.
2. ALL STOREFRONT MULLIONS SHALL BE FACTORY PAINTED.
3. ALL GLASS TO BE FULLY TEMPERED.

WINDOW ELEVATIONS

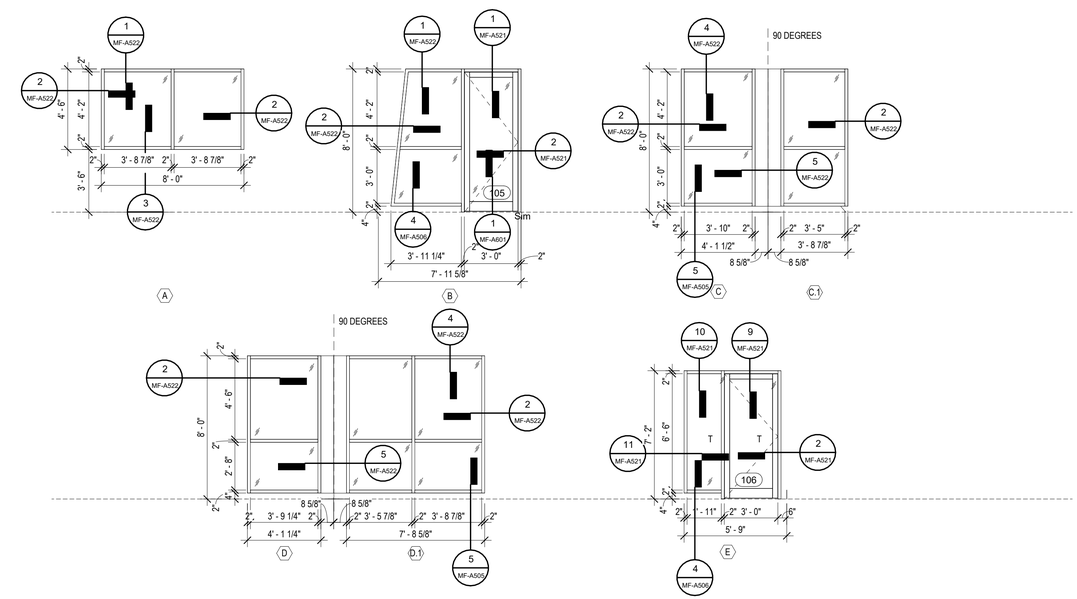

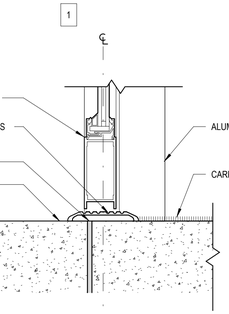

1 MF-A601 EXT. PAVING TO INT. CONCRETE & STOREFRONT
3" = 1'-0"

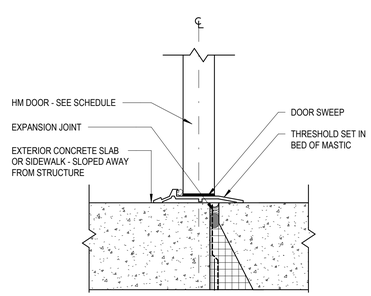

2 MF-A601 EXT. PAVING TO INT. PAVING @ HM DOOR
3" = 1'-0"

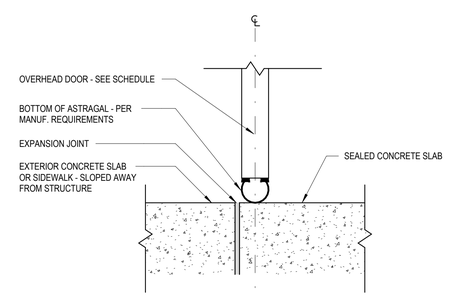

3 MF-A601 EXT. PAVING TO INT. CONCRETE @ OVERHEAD DOOR
3" = 1'-0"

Susan Hatchell
Landscape Architecture, PLLC
711 W. North Street, Raleigh, NC 27603
p: 919-838-9600 f: 919-838-9700

Esse Architects
620 PERSHING | RALEIGH | NORTH CAROLINA 27608

DOOR AND WINDOW SCHEDULES

LAKE MYRA COUNTY PARK
Wake County, NC

REVISIONS

Date: 07/27/26

MF-A601

GENERAL NOTES:

1. THE STRUCTURAL DRAWINGS MUST BE USED IN CONJUNCTION WITH THE ARCHITECTURAL, CIVIL, MECHANICAL, PLUMBING, AND ELECTRICAL DRAWINGS, AND THE SPECIFICATIONS. THE CONTRACTOR MUST VERIFY THE REQUIREMENTS OF OTHER TRADES AS TO SLEEVES, CHASES, HANGERS, INSERTS, ANCHORS, HOLES, AND ADDITIONAL ITEMS TO BE PLACED OR SET IN THE STRUCTURAL WORK.

2. THIS STRUCTURE HAS BEEN DESIGNED IN ACCORDANCE WITH THE PROVISIONS OF THE NORTH CAROLINA STATE BUILDING CODE, 2018 EDITION.

3. THE CONTRACTOR MUST PROVIDE TEMPORARY SHORING AND BRACING REQUIRED TO ERECT AND HOLD THE STRUCTURE IN PROPER ALIGNMENT UNTIL PERMANENT SUPPORTS AND LATERAL BRACING ARE IN PLACE.

4. DISCREPANCIES WITHIN DRAWINGS, BETWEEN THE SPECIFICATIONS AND THE DRAWINGS, OR WITHIN THE SPECIFICATIONS, MUST BE BROUGHT TO THE ATTENTION OF THE ARCHITECT AND ENGINEER DURING THE BIDDING PROCESS IN TIME TO PERMIT CLARIFICATION BY ADDENDUM. IF INCONSISTENCIES, DISCREPANCIES OR CONTRADICTIONS IN THE CONTRACT DOCUMENTS ARE DISCOVERED AFTER THE CLOSE OF BIDDING QUESTIONS, THE CONTRACTOR MUST BE DEEMED BY SUBMITTAL OF THEIR BID, TO HAVE BID THE MOST COSTLY AS TO LABOR, MATERIALS, DURATION, SEQUENCE AND METHOD OF CONSTRUCTION TO PROVIDE THE WORK.

5. THESE STRUCTURAL DRAWINGS ARE ISSUED ON THE DATE INDICATED FOR THE PURPOSE DESIGNATED. THESE DRAWINGS MUST NOT BE ISSUED OR RELEASED FOR ANY OTHER PURPOSE WITHOUT THE WRITTEN AUTHORIZATION OF THE STRUCTURAL ENGINEER OF RECORD.

6. DETAILS LABELED "TYPICAL DETAIL" WITHIN THE DOCUMENTS APPLY TO SITUATIONS ON THE PROJECT THAT MAY OCCUR THROUGHOUT THE PROJECT. SUCH DETAILS APPLY WHETHER OR NOT THE DETAIL IS SPECIFICALLY REFERENCED AT EACH INSTANCE. NOTIFY ENGINEER IF CLARIFICATIONS ARE REQUIRED REGARDING THE APPLICABILITY OF THE "TYPICAL DETAIL."

7. DESIGN CRITERIA:

CLASSIFICATION OF BUILDING
- RISK CATEGORY II

SUPERIMPOSED ROOF DEAD LOADS - UNIFORM:
- INSULATION AND ROOF MEMBRANE . . . . . 3 PSF
- CEILING . . . . . 2 PSF
- DUCTS, LIGHTS, MISC. MECHANICAL . . . . . 3 PSF
- SOLAR PANEL ALLOWANCE . . . . . 10 PSF

SUPERIMPOSED FLOOR DEAD LOADS - UNIFORM:
- FLOOR FINISH . . . . . 3 PSF
- CEILING . . . . . 2 PSF
- DUCTS, LIGHTS, MISC. MECHANICAL . . . . . 3 PSF

LIVE LOADS - UNIFORM:
- SLAB ON GRADE . . . . . 100 PSF
- FLOOR . . . . . 80 PSF
- ROOF . . . . . 20 PSF
- CLASSROOMS . . . . . 40 PSF
- OFFICES . . . . . 50 PSF
- PARTITION ALLOWANCE . . . . . 15 PSF
- BALCONIES AND DECKS . . . . . 100 PSF

- STORAGE . . . . . 125 PSF
- MECHANICAL SPACE . . . . . 150 PSF
- STAIRWAYS . . . . . 100 PSF

LIVE LOAD REDUCTION OF THE UNIFORMLY DISTRIBUTED FLOOR LIVE LOADS HAS BEEN UTILIZED WHERE PERMITTED BY CODE.

LIVE LOADS - CONCENTRATED:
- ROOFS . . . . . 300#

UNLESS OTHERWISE NOTED, CONCENTRATED LOADS ARE APPLIED UNIFORMLY OVER 2'-6" x 2'-6" AREA.

RAIN LOADS:
- RAIN INTENSITY (15 MINUTE) . . . . . 6.25 IN/HR

SNOW LOADS:
- GROUND SNOW LOAD (Pg) . . . . . 15 PSF
- SLOPED ROOF LOAD (Pf) . . . . . 11 PSF
- IMPORTANCE FACTOR (Is) 1.0
- THERMAL FACTOR (Ct) 1.0
- EXPOSURE FACTOR (Ce) 1.0

GENERAL NOTES (CONT):

WIND LOADS:
- BASIC WIND SPEED (Vult) . . . . . 116 MPH
- ALLOWABLE STRESS DESIGN WIND SPEED (Vasd) . . . . . 90 MPH
- EXPOSURE CATEGORY . . . . . B
- INTERNAL PRESSURE COEFFICIENT . . . . . ±0.18
- COMPONENT AND CLADDING PRESSURES:
  - WALLS, ZONE 5 (10 SF) . . . . . 16 PSF
  - ROOF, ZONE 3 (10 SF) . . . . . 56 PSF
- ULTIMATE WIND BASE SHEARS (FOR MWFRS):
  - Vx . . . . . 16 KIPS
  - Vy . . . . . 36 KIPS

SEISMIC LOADS:
- SITE CLASSIFICATION C
- SEISMIC DESIGN CATEGORY . . . . . B
- IMPORTANCE FACTOR (IE) 1.0
- SPECTRAL RESPONSE ACCELERATIONS:
  - S_S . . . . . 0.112 S_1 . . . . . 0.057
  - S_{MS} . . . . . 0.146 S_{M1} 0.085
  - S_{DS} . . . . . 0.097 S_{D1} 0.057
- ANALYSIS PROCEDURE . . . . . EQUIVALENT LATERAL FORCE

LATERAL FORCE RESISITNG SYSTEM
- STEEL SYSTEMS NOT SPECIFICALLY DETAILED FOR SEISMIC REISTANCE . . . . . R=3
- RESPONSE MODIFICATION COEFFICIENT (R) 3.0
- SEISMIC RESPONSE COEFFICIENT (Cs) 0.03
- ULTIMATE SEISMIC BASE SHEAR (V) . . . . . 6 KIPS

LATERAL DESIGN CONTROL
- CONTROLLING LATERAL LOADS . . . . . WIND

SHOP DRAWINGS AND SUBMITTALS:

1. SHOP DRAWINGS AND SUBMITTALS MUST BEAR THE CONTRACTOR'S REVIEW STAMP WITH CHECKER'S INITIALS BEFORE BEING SUBMITTED TO THE ARCHITECT FOR APPROVAL.

2. WHEN THE CONTRACTOR HAS BEEN AUTHORIZED TO USE THE ARCHITECT'S AND / OR ENGINEER'S DRAWINGS AS SHOP DRAWINGS, THE CONTRACTOR MUST REMOVE ALL TITLE BLOCKS, PROFESSIONAL SEALS, AND ANY OTHER REFERENCE TO THE ARCHITECT AND / OR ENGINEER FROM THAT SHOP DRAWING.

SITE PREPARATION, CONTROLLED FILL AND SURCHARGE NOTES:

1. OBTAIN AND BECOME THOROUGHLY FAMILIAR WITH THE CONDITIONS AND RECOMMENDATIONS DESCRIBED IN THE SUBSURFACE EXPLORATION AND GEOTECHNICAL ENGINEERING REPORT. THIS REPORT IS NOT A PART OF THE CONTRACT DOCUMENTS, AND MAY NOT BE REPRESENTATIVE OF ALL SITE CONDITIONS WHICH MAY BE ENCOUNTERED.

2. SITE PREPARATION AND CONTROLLED FILL MUST INCLUDE THE AREA ENCLOSED BY A LINE DRAWN 5 FEET OUTSIDE THE BUILDING FOOTPRINT.

3. REMOVE ALL VEGETATION, ROOT MAT, TOPSOIL, ASPHALT PAVING AND AGGREGATE BASE MATERIAL. BASE BID ON 10 INCHES AVERAGE DEPTH.

4. THE EXPOSED SUBGRADE MUST BE PROOF ROLLED WITH A LARGE RUBBER-TIRED ROLLER OR LOADED DUMP TRUCK; PERFORM AT LEAST TWO PASSES IN EACH OF TWO PERPENDICULAR DIRECTIONS.

5. EXCAVATE SOFT SPOTS REVEALED BY PROOF ROLLING AS DIRECTED.

6. PRIOR TO PLACEMENT OF ANY FILL MATERIAL, SETTLEMENT PLATES MUST BE INSTALLED ON THE PREPARED SUBGRADE. SEE PLAN FOR LOCATIONS AND DETAILS.

7. FILL WITH SATISFACTORY STRUCTURAL FILL MATERIALS TO THE SPECIFIED ELEVATIONS.

8. FILL MUST BE PLACED IN LOOSE LIFTS NOT EXCEEDING 8 INCHES, WHEN MECHANICAL COMPACTION EQUIPMENT IS USED OR 4 INCHES WHEN HAND COMPACTION EQUIPMENT IS USED AND MUST BE COMPACTED TO AT LEAST 95 PERCENT OF THE STANDARD PROCTOR MAXIMUM DRY DENSITY (ASTM D698).

9. PLACE SURCHARGE FILL IN ONE FOOT LOOSE LIFTS, UP TO THE SPECIFIED ELEVATION. THE DEPTH OF SURCHARGE IS BASED ON A SOIL UNIT WEIGHT OF 120 POUNDS PER CUBIC FOOT. FOR LESS DENSE MATERIALS, PROVIDE ADDITIONAL SURCHARGE OR PROVIDE COMPACTION AS REQUIRED TO YIELD THE EQUIVALENT TOTAL WEIGHT OF SURCHARGE.

10. THE CONTRACTOR MUST SECURE AND PAY FOR THE SERVICES OF A LICENSED LAND SURVEYOR TO MONITOR THE SETTLEMENT PLATES. ELEVATION READINGS MUST BE TAKEN ON THE SURFACE OF THE PLATE AND THE TOP OF THE BAR AT THE TIME OF INSTALLATION. SUBSEQUENT READINGS MUST BE OBTAINED ON TOP OF THE BAR A MINIMUM OF THREE TIMES PER WEEK DURING THE PLACEMENT OF ANY FILL, TWO TIMES PER WEEK FOR A PERIOD OF TWO WEEKS AFTER COMPLETION OF FILL, AND ONE TIME PER WEEK THEREAFTER.

11. DURATION OF THE READINGS MUST BE ASSUMED TO BE 90 DAYS AFTER COMPLETION OF THE FILL. SUBMIT ELEVATION READINGS TO THE [ARCHITECT] [ENGINEER] [CONTRACTING OFFICER] ON A WEEKLY BASIS.

FOUNDATION NOTES:

1. FOUNDATIONS HAVE BEEN DESIGNED IN ACCORDANCE WITH THE RECOMMENDATIONS IN THE [SUBSURFACE EXPLORATION AND GEOTECHNICAL ENGINEERING REPORT PREPARED BY ESP ASSOCIATES, INC., DATED AUGUST 29, 2025.

2. FOUNDATIONS HAVE BEEN DESIGNED FOR A NET ALLOWABLE SOIL BEARING PRESSURE OF 2,500 PSF.

3. TOP OF FOOTING ELEVATIONS MUST BE A MINIMUM DEPTH OF 1'-0" BELOW LOWEST ADJACENT SOIL GRADE.

4. PRIOR TO PLACING FOUNDATION CONCRETE, ALL FOUNDATION EXCAVATIONS MUST BE INSPECTED BY THE OWNER'S GEOTECHNICAL TESTING AGENCY TO EXPLORE THE EXTENT OF LOOSE, SOFT, EXPANSIVE, OR OTHERWISE UNSATISFACTORY SOIL MATERIAL AND TO VERIFY DESIGN BEARING PRESSURE. DIRECTION FOR CORRECTIVE ACTION WILL BE PROVIDED BY THE OWNER'S GEOTECHNICAL TESTING AGENCY WHERE UNSATISFACTORY SOILS ARE PRESENT.

5. NO UNBALANCED BACKFILLING MUST BE DONE AGAINST MASONRY OR CONCRETE WALLS UNLESS WALLS ARE SECURELY BRACED AGAINST OVERTURNING, EITHER BY TEMPORARY CONSTRUCTION BRACING OR BY PERMANENT CONSTRUCTION.

6. CONTROL GROUNDWATER AND SURFACE RUNOFF THROUGHOUT THE CONSTRUCTION PROCESS. INUNDATION AND LONG TERM EXPOSURE OF BEARING SURFACES WHICH RESULT IN DETERIORATION OF BEARING MUST BE PREVENTED.

CAST-IN-PLACE CONCRETE NOTES:

1. CONCRETE MUST BE IN ACCORDANCE WITH AMERICAN CONCRETE INSTITUTE (ACI) 301 AND 318.

2. CONCRETE MUST BE NORMAL WEIGHT UNLESS OTHERWISE DENOTED AS LW (LIGHTWEIGHT) AND MUST OBTAIN 28 DAY COMPRESSIVE STRENGTHS AS FOLLOWS:
   - A. SLAB-ON-GRADE ..... 3,500 PSI
   - B. COLUMNS AND WALLS..... 4,000 PSI
   - C. CONCRETE NOT OTHERWISE NOTED..... 3,000 PSI

3. REINFORCING MATERIALS MUST BE AS FOLLOWS:
   - A. REINFORCING BARS - ASTM A615, GRADE 60, DEFORMED.
   - B. WELDED REINFORCING BARS - ASTM A706, GRADE 60.
   - C. WELDED WIRE REINFORCEMENT - ASTM A1064, WELDED STEEL WIRE REINFORCEMENT; PROVIDE SHEET TYPE, ROLL TYPE IS NOT ACCEPTABLE.

4. ALL REINFORCING STEEL AND EMBEDDED ITEMS SUCH AS ANCHOR RODS AND WELD PLATES MUST BE ACCURATELY PLACED AND ADEQUATELY TIED AND SUPPORTED BEFORE CONCRETE IS PLACED TO PREVENT DISPLACEMENT BEYOND PERMITTED TOLERANCES.

5. CONCRETE COVER TO REINFORCING STEEL MUST EQUAL THE FOLLOWING, UNLESS OTHERWISE NOTED:
   - A. SURFACES AGAINST EARTH ..... 3"
   - B. SURFACES NOT CAST AGAINST EARTH, BUT EXPOSED TO EARTH OR WEATHER IN THE FINAL CONDITION
     - #5 AND SMALLER ..... 1 1/2"
     - #6 AND LARGER ..... 2"
   - C. BEAMS, GIRDERS, COLUMNS, AND WALLS ABOVE FINISHED FIRST FLOOR ..... 1 1/2"
   - D. ELEVATED SLABS ..... 3/4"

6. LAP CONTINUOUS REINFORCING STEEL 57 X BAR DIAMETER, TYPICAL UNLESS OTHERWISE NOTED.

7. LAP CONTINUOUS REINFORCING STEEL PER SCHEDULES AND TYPICAL DETAILS.

8. DO NOT EMBED CONDUIT AND PIPING IN OR PENETRATE THROUGH CAST-IN-PLACE CONCRETE ELEMENTS UNLESS OTHER NOTED.

CONCRETE MIX DESIGN NOTES:

1. MIX DESIGNS COMPRESSIVE STRENGTHS (f'c) BASED ON 28 DAY DESIGN STRENGTH, UNLESS OTHERWISE NOTED.

2. CONCRETE NOT OTHERWISE NOTED:
   - A. MINIMUM COMPRESSIVE STRENGTH (f'c) = 4000 PSI

3. FOUNDATIONS (SPREAD FOOTINGS, MAT FOOTINGS):
   - A. EXPOSURE CLASS = ACI 318 F0, S0, W0, C1
   - B. MINIMUM COMPRESSIVE STRENGTH (f'c) = 3,000PSI
   - C. MAXIMUM W/CM = 0.5
   - D. BLENDED HYDRAULIC CEMENT = ASTM C595 TYPE 1L
   - E. SLUMP = 5" MAX PLUS OR MINUS 1", OR 8" MAX, PLUS OR MINUS 1" FOR CONCRETE WITH A VERIFIED SLUMP OF 3" PLUS OR MINUS 1" BEFORE ADDING HIGH-RANGE WATER-REDUCING OR PLASTICIZING ADMIXTURE
   - F. AIR CONTENT = NO REQUIREMENTS
   - G. AGGREGATE = NORMAL WEIGHT, ¾" NOMINAL
   - H. LIMIT WATER-SOLUBLE, CHLORIDE-ION CONTENT IN HARDENED CONCRETE TO 0.1 PERCENT BY WEIGHT OF CEMENT

4. INTERIOR FLOOR SLAB-ON-GRADE:
   - A. EXPOSURE CLASS = ACI 318 F0, S0, W0, C0
   - B. MINIMUM COMPRESSIVE STRENGTH (f'c) = 3,500PSI
   - C. MAXIMUM W/CM = 0.5
   - D. BLENDED HYDRAULIC CEMENT = ASTM C595 TYPE 1L
   - E. SLUMP = 5" MAX PLUS OR MINUS 1", OR 8" MAX, PLUS OR MINUS 1" FOR CONCRETE WITH A VERIFIED SLUMP OF 3" PLUS OR MINUS 1" BEFORE ADDING HIGH-RANGE WATER-REDUCING OR PLASTICIZING ADMIXTURE
   - F. AIR CONTENT = DO NOT ALLOW AIR CONTENT IN TROWEL FINISHED FLOORS TO EXCEED 3%
   - G. AGGREGATE = NORMAL WEIGHT, ¾" NOMINAL
   - H. LIMIT WATER-SOLUBLE, CHLORIDE-ION CONTENT IN HARDENED CONCRETE TO 0.3 PERCENT BY WEIGHT OF CEMENT

NORTH CAROLINA PROFESSIONAL SEAL 044996 ENGINEER SCOTT M. FRANCIS
07/27/2026

lynchmykins now IMEG
301 N WEST STREET, SUITE 105
RALEIGH, NC 27603
919.782.1833 www.imegcorp.com

IMEG RESERVES PROPRIETARY RIGHTS, INCLUDING COPYRIGHTS, TO THIS DRAWING AND THE DATA SHOWN THEREON. SAID DRAWING AND/OR DATA ARE THE EXCLUSIVE PROPERTY OF IMEG AND SHALL NOT BE USED OR REPRODUCED FOR ANY OTHER PROJECT WITHOUT THE EXPRESS WRITTEN APPROVAL AND PARTICIPATION OF IMEG. ©2025 IMEG CONSULTANTS CORP.
North Carolina Design Registration #F-1507

Susan Hatchell Landscape Architecture, PLLC
711 W. North Street, Raleigh, NC 27603
p: 919-838-9600 f: 919-838-9700

lynchmykins now IMEG
301 N WEST STREET, SUITE 105
RALEIGH, NC 27603
919.782.1833 www.imegcorp.com

GENERAL NOTES

LAKE MYRA COUNTY PARK
Wake County, NC

REVISIONS

Date07/27/2026

MF-S001

STRUCTURAL STEEL NOTES:

1. STRUCTURAL STEEL MUST BE IN ACCORDANCE WITH THE AMERICAN INSTITUTE OF STEEL CONSTRUCTION (AISC) 360.

2. STRUCTURAL STEEL FABRICATOR MUST PARTICIPATE IN THE AISC QUALITY CERTIFICATION PROGRAM AND BE A DESIGNATED AISC-CERTIFIED PLANT.

3. STRUCTURAL STEEL INSTALLER MUST PARTICIPATE IN THE AISC QUALITY CERTIFICATION PROGRAM AND BE A DESIGNATED AISC-CERTIFIED ERECTOR.

4. STRUCTURAL STEEL MUST COMPLY WITH THE FOLLOWING SPECIFICATIONS:
   - A. STRUCTURAL STEEL SHAPES, PLATES AND BARS UNLESS OTHERWISE NOTED - ASTM A572, Fy = 50 KSI
   - B. STRUCTURAL STEEL W-SHAPES - ASTM A992, Fy = 50 KSI
   - C. HOLLOW STRUCTURAL SECTIONS (HSS):
     - a. SQUARE & RECTANGULAR - ASTM A500, GRADE C, Fy = 50 KSI
     - b. ROUND - ASTM A500, GRADE C, Fy = 46 KSI
   - D. ANCHOR RODS - ASTM F1554, GRADE [36] [55]
   - E. HIGH STRENGTH BOLTS - ASTM F3125, TYPE A325 (TYPICAL UON)
   - F. FULLY PRETENSIONED BOLTS - ASTM F1852 (TWIST-OFF TYPE)
   - G. WASHERS - ASTM F436
   - H. NUTS - ASTM A563
   - I. HEADED STUDS - ASTM A29, GRADE 1010 THROUGH 1020

5. UNLESS OTHERWISE NOTED, ALL REQUIRED DESIGN STRENGTHS AND REACTIONS INDICATED ARE BASED ON THE "LOADING COMBINATIONS USING STRENGTH DESIGN OR LOAD AND RESISTANCE FACTOR DESIGN" PER SECTION 1605.2 OF THE BUILDING CODE.

6. STRUCTURAL STEEL FRAME IS CONSIDERED AS UNRESTRAINED FOR FIRE PROTECTION PURPOSES.

7. ALL STEEL CONNECTIONS AND MEMBER REINFORCEMENT MUST BE DESIGNED BY FABRICATOR'S QUALIFIED PROFESSIONAL ENGINEER FOR LOADS INDICATED ON THE DRAWINGS, PER OPTION 3B OF ANSI/AISC 303 AND COMPLETE THE FOLLOWING:
   - A. SUBMIT STRUCTURAL CALCULATIONS SIGNED AND SEALED BY THE QUALIFIED PROFESSIONAL ENGINEER REGISTERED IN THE NORTH CAROLINA RESPONSIBLE FOR THEIR PREPARATION.
   - B. THE PROFESSIONAL ENGINEER RESPONSIBLE FOR CONNECTION DESIGN MUST REVIEW THE SHOP DRAWINGS PRIOR TO SUBMITTAL TO VERIFY THAT THE CONNECTIONS AS DETAILED ON THE SHOP DRAWINGS COMPLY WITH THE CONNECTION DESIGN REQUIREMENTS OF THE FINAL CALCULATIONS.
   - C. A REVIEW LETTER, SIGNED AND SEALED BY THE PROFESSIONAL ENGINEER RESPONSIBLE FOR CONNECTION DESIGN MUST BE PROVIDED WITH THE SHOP DRAWINGS AND CALCULATION SUBMITTAL STATING THAT THIS REVIEW AND VERIFICATION HAS BEEN COMPLETED.

8. HIGH STRENGTH BOLTS MAY BE TIGHTENED TO THE "SNUG TIGHT" CONDITION, UNLESS OTHERWISE NOTED.

9. BOLTED CONNECTIONS MAY USE NON-STANDARD HOLES, EXCEPT IN THE FOLLOWING LOCATIONS:
   - A. AXIAL CONNECTIONS IDENTIFIED ON PLAN.
   - B. ALL FRAMING CONNECTIONS AT BRACED FRAMES AND MOMENT FRAMES.
   - C. CONNECTIONS IDENTIFIED ON PLAN WITH FULL DEPTH STIFFENER PLATES.

STRUCTURAL STEEL NOTES (CONT):

10. PROVIDE ANGLE FRAMING AROUND OPENINGS LARGER THAN 6 INCHES IN ANY DIMENSION (INCLUDING ROOF DRAINS) TO SUPPORT STEEL DECK. REFERENCE PLANS AND TYPICAL DETAILS FOR SIZING REQUIREMENTS.

11. WELDING MUST BE IN ACCORDANCE WITH AWS D1.1, "STRUCTURAL WELDING CODE - STEEL." WELD ELECTRODES MUST BE E70XX LOW HYDROGEN. UNLESS OTHERWISE NOTED, PROVIDE CONTINUOUS FILLET WELDS WITH MINIMUM SIZE REQUIRED BY TABLE J2.4 AISC 360.

12. INSTALLATION OF HEADED COMPOSITE STUDS MUST CONFORM TO THE REQUIREMENTS OF AWS D1.1, SECTIONS 9.4 AND 9.5. HEADED COMPOSITE STUDS MUST BE TESTED IN ACCORDANCE WITH AWS D1.1, SECTIONS 9.6, 9.7, AND 9.8 BY A QUALIFIED TESTING AGENCY.

13. COORDINATE ALL MEMBER LOCATIONS, UNIT WEIGHTS, OPENING SIZES, AND CURB DIMENSIONS FOR MECHANICAL EQUIPMENT WITH THE ACTUAL EQUIPMENT FURNISHED.

14. SHOP PRIME STEEL SURFACES, EXCEPT THE FOLLOWING:
   - A. SURFACES EMBEDDED IN CONCRETE OR MORTAR. EXTEND PRIMING OF PARTIALLY EMBEDDED MEMBERS TO A DEPTH OF 2 INCHES.
   - B. SURFACES TO BE WELDED.
   - C. SURFACES TO RECEIVE SPRAYED FIRE-RESISTIVE MATERIALS.
   - D. GALVANIZED SURFACES.
   - E. SURFACES ENCLOSED IN INTERIOR CONSTRUCTION.

15. CLEAN ALL STEEL SURFACES TO BE PAINTED. REMOVE LOOSE RUST, MILL SCALE, SPATTER, SLAG, OR FLUX DEPOSITS. PREPARE SURFACES IN ACCORDANCE WITH SSPC-SP3 SPECIFICATION AND STANDARD.

16. HOT-DIP GALVANIZE AFTER FABRICATION THE FOLLOWING:
   - A. ANGLES AND PLATES SUPPORTING MASONRY IN EXTERIOR WALLS.
   - B. LINTELS AND LINTEL ASSEMBLIES SUPPORTING MASONRY IN EXTERIOR WALLS.
   - C. ALL STEEL EXPOSED TO WEATHER IN THE FINAL CONSTRUCTION.
   - D. ITEMS IDENTIFIED AS GALVANIZED ON ARCHITECTURAL OR STRUCTURAL DRAWINGS.
   - E. STEEL IN CONTACT WITH PT WOOD.

17. STEEL MEMBERS MUST BE SPLICED ONLY WHERE INDICATED.

18. LOCATE CONSTRUCTION JOINTS FOR SLABS ON METAL DECK MIDWAY BETWEEN BEAMS WHERE THE JOINT IS PARALLEL TO THE BEAM SPAN. LOCATE JOINTS WITHIN THE MIDDLE THIRD SPAN WHERE THE JOINT IS PERPENDICULAR TO THE BEAM SPAN. ANY STOP IN CONCRETE WORK MUST BE MADE WITH VERTICAL BULKHEADS, UNLESS OTHERWISE SHOWN. REINFORCING TO BE CONTINUOUS THROUGH JOINTS.

19. ALL STAIR LANDINGS, STAIRS, AND STAIR SUPPORTS TO BE DESIGNED BY STAIR MANUFACTURER. LAYOUT OF STAIRS, LANDINGS, HANDRAILS, ETC. SHALL COMPLY WITH ARCHITECTURAL DRAWINGS. STRUCTURAL DESIGN CALCULATIONS AND DRAWINGS STAMPED BY A REGISTERED ENGINEER SHALL BE SUBMITTED TO THE STRUCTURAL EOR FOR REVIEW OF LOADING. ARCHITECT AND STAIR MANUFACTURER ARE RESPONSIBLE TO REVIEW FOR CODE AND ADA COMPLIANCE. STAIR MANUFACTURER SHALL PROVIDE ALL POSTS AND CONNECTIONS TO SUPPORT STAIRS. POSTS AND HANGERS MUST BE LOCATED IN PARTITION WALLS AND LOAD THE STRUCTURE CONCENTRICALLY.

Susan Hatchell
Landscape Architecture, PLLC
711 W. North Street, Raleigh, NC 27603
p: 919-838-9600 f: 919-838-9700

lynchmykins now IMEG
301 N WEST STREET, SUITE 105
RALEIGH, NC 27603
919.782.1833 www.imegcorp.com

GENERAL NOTES

LAKE MYRA COUNTY PARK
Wake County, NC

NORTH CAROLINA PROFESSIONAL SEAL 044996 ENGINEER SCOTT M. FRANCIS
07/27/2026

REVISIONS

lynchmykins now IMEG
301 N WEST STREET, SUITE 105
RALEIGH, NC 27603
919.782.1833 www.imegcorp.com

IMEG RESERVES PROPRIETARY RIGHTS, INCLUDING COPYRIGHTS, TO THIS DRAWING AND THE DATA SHOWN THEREON. SAID DRAWING AND/OR DATA ARE THE EXCLUSIVE PROPERTY OF IMEG AND SHALL NOT BE USED OR REPRODUCED FOR ANY OTHER PROJECT WITHOUT THE EXPRESS WRITTEN APPROVAL AND PARTICIPATION OF IMEG. ©2025 IMEG CONSULTANTS CORP.

North Carolina Design Registration #F-1507

Date07/27/2026

MF-S002

ROUGH CARPENTRY NOTES:

1. ROUGH CARPENTRY MUST BE IN ACCORDANCE WITH THE AMERICAN WOOD COUNCIL (AWC) "NATIONAL DESIGN SPECIFICATION FOR WOOD CONSTRUCTION."

2. UNLESS OTHERWISE NOTED, USE 'COMMON' NAILS AND ALL NAILING MUST CONFORM TO THE "FASTENING SCHEDULE" TABLE 2304.10.1 OF THE BUILDING CODE.

3. WOOD FRAMING MEMBERS MUST COMPLY WITH PS 20 "AMERICAN SOFTWOOD LUMBER STANDARD" AND THE FOLLOWING REQUIREMENTS:
   A. MOISTURE CONTENT - SEASONED, WITH 19 PERCENT MAXIMUM MOISTURE CONTENT.
   B. GRADE - NO. 2, OR BETTER UNLESS OTHERWISE NOTED.
   C. SPECIES - [SPRUCE-PINE-FIR UNDER NLGA RULES] [SPRUCE-PINE-FIR (SOUTH) UNDER WWPA RULES] [SOUTHERN PINE GRADED UNDER SPIB RULES].

4. WOOD STRUCTURAL PANELS (WSP) MUST COMPLY WITH PS 1 "U.S. PRODUCT STANDARD FOR CONSTRUCTION AND INDUSTRIAL PLYWOOD" FOR PLYWOOD CONSTRUCTION PANELS AND THE FOLLOWING REQUIREMENTS:
   A. EXTERIOR WALL AND SHEAR WALL SHEATHING: [7/16"] INCH, APA RATED SHEATHING, [EXTERIOR EXPOSURE] [EXPOSURE 1] DURABILITY CLASSIFICATION.
   B. FLOOR SHEATHING: [23/32"] INCH, TONGUE-AND-GROOVE, APA RATED SHEATHING, [EXTERIOR EXPOSURE] [EXPOSURE 1] DURABILITY CLASSIFICATION.
   C. ROOF SHEATHING: [9/16"] INCH, APA RATED SHEATHING, [EXTERIOR EXPOSURE] [EXPOSURE 1] DURABILITY CLASSIFICATION. PROVIDE TONGUE-AND-GROOVE EDGES OR USE "PLY-CLIPS" AT MID-SPAN BETWEEN EACH SUPPORT.

5. ALL WOOD FRAMING MEMBERS PERMANENTLY EXPOSED TO THE WEATHER AND ALL SILL PLATES IN CONTACT WITH CONCRETE MUST BE PRESERVATIVE-TREATED. REFER TO THE SPECIFICATIONS.

6. STEEL PLATE CONNECTORS MUST COMPLY WITH ASTM A 36 SPECIFICATIONS (Fy= 36 KSI). BOLTS CONNECTING WOOD MEMBERS MUST COMPLY WITH ASTM A307 COMMON STEEL BOLTS, AND MUST BE 1/2 INCH DIAMETER, UNLESS OTHERWISE NOTED.

7. METAL FRAMING ANCHORS, HOLD DOWNS, HURRICANE TIES, HANGERS, ETC. MUST COMPLY WITH ASTM A653 AND BE CAPABLE OF SUPPORTING THE REACTIONS SHOWN. WHERE PRODUCTS OF A SPECIFIC MANUFACTURER ARE SHOWN, EQUAL PRODUCTS OF ANOTHER MANUFACTURER MAY BE USED IF APPROVED.

8. PROVIDE BRIDGING FOR ALL FLOOR JOISTS AND ROOF RAFTERS. MAXIMUM SPACING MUST BE 8'-0", UNLESS OTHERWISE NOTED.

9. PROVIDE DOUBLE JOISTS UNDER ALL PARTITIONS WHICH RUN PARALLEL WITH JOISTS, AND UNDER ALL CONCENTRATED LOADS FROM FLOORS ABOVE UNLESS OTHERWISE INDICATED. PROVIDE MULTIPLE STUDS WHERE INDICATED ON THE PLANS.

10. PROVIDE HEADERS OF THE SAME CROSS SECTION AS JOISTS OR RAFTERS TO FRAME AROUND ALL OPENINGS TO SUPPORT SHEATHING, UNLESS OTHERWISE NOTED OR DETAILED ON THE DRAWINGS.

11. UNLESS OTHERWISE NOTED, ATTACH BLOCKING AND NAILERS TO STEEL FRAMING USING 3/16 INCH DIAMETER POWDER ACTUATED FASTENERS AT 24 INCHES ON CENTER OR 1/2 INCH DIAMETER BOLTS AT 48 INCHES ON CENTER. STAGGER FASTENERS TO ALTERNATE SIDES OF BEAM WEB.

12. WHERE MULTIPLE FRAMING MEMBERS ARE INDICATED, SCAB CONTINGENT MEMBERS TOGETHER WITH 16d NAILS AT 12 INCHES ON CENTER, ALTERNATING AT 2 INCHES FROM EACH EDGE.

13. ALL CONNECTION HARDWARE IN CONTACT WITH PRESERVATIVE TREATED WOOD MUST BE HOT-DIP GALVANIZED COATED.

14. POWDER ACTUATED FASTENERS (PAF) MUST HAVE A MINIMUM ALLOWABLE CAPACITY INTO THE BASE MATERIAL AS FOLLOWS UNLESS OTHERWISE NOTED:
   A. STEEL: SHEAR = 600 LBS
      TENSION = 250 LBS
   B. CONCRETE: SHEAR = 260 LBS
      TENSION = 255 LBS

STRUCTURAL DELEGATED DESIGN ELEMENT NOTES:

1. THE FOLLOWING BUILDING ELEMENTS REQUIRE DELEGATED DESIGN AND ENGINEERING BY A SPECIALTY STRUCTURAL ENGINEER:
   A. GLAZING ASSEMBLY CONNECTIONS TO THE STRUCTURE
   B. STRUCTURAL STEEL CONNECTIONS
   C. MECHANICAL, ELECTRICAL, AND PLUMBING SUPPORTS AND DISTRIBUTIONS SYSTEMS, INCLUDING BRACING AND ATTACHMENTS

   REFERENCE SPECIFICATIONS FOR COMPLETE REQUIREMENTS

2. SUBMIT COMPLETE CALCULATIONS AND SHOP DRAWINGS, SIGNED AND SEALED BY THE PROFESSIONAL ENGINEER REGISTERED IN THE STATE OF NORTH CAROLINA RESPONSIBLE FOR THE DESIGN, INCLUDING DESIGN LOADINGS AND REACTIONS APPLIED TO THE SUPPORTING STRUCTURE. INCLUDE A SUMMARY OF THE CONTROLLING LOAD CASES FOR EACH LOCATION.

3. IN ADDITION TO THEIR OWN DEAD WEIGHT AND THE DEAD LOADS SHOWN OR INDICATED IN THE DRAWINGS, MEMBERS MUST BE DESIGNED TO SUPPORT THE LOADS INDICATED IN THE GENERAL NOTES.

4. CONNECTION DETAILS SHOWN ARE SCHEMATIC ONLY. ALL CONNECTIONS MUST BE DESIGNED AND DETAILED BY THE MANUFACTURER TO SUIT THE SPECIFIED LOADS. CONNECTIONS MUST ACCOUNT FOR THERMAL MOVEMENT, DEFLECTION, CREEP, MANUFACTURING TOLERANCES, AND ERECTION TOLERANCES. DETAIL ALL CONNECTIONS ON SHOP DRAWINGS.

5. THE CONTRACTOR MUST BE RESPONSIBLE FOR THE COORDINATION OF ALL SPECIALTY STRUCTURAL ELEMENTS AND COST ASSOCIATED WITH A CONTRACTOR INITIATED CHANGE IN BUILDING STRUCTURE, INCLUDING CONSTRUCTION COSTS AND RE-ENGINEERING COSTS.

WOOD DECK NOTES:

1. ROOF DECKING SHALL BE AS NOTED ON PLANS, TONGUE AND GROOVE CONTINUOUS LAY UP (NO LAPS).

2. ALL EXTERIOR EXPOSED STRUCTURAL WOOD DECKING AND BLOCKING, AND SHEATHING IS TO BE EXTERIOR GRADE PRESSURE PRESERVATIVE TREATED, MIN. RETENTION 0.25 PCF.

3. WOOD DECKING TO BE STRESS RATED DOUG FIR OR SPRUCE-PINE-FIR #1 OR BETTER.

4. SCREW LENGTH TO FIT APPLICATION. ALL SCREWS SHALL PENETRATE A MINIMUM OF 1 3/4" BUT NOT MORE THAN THE FULL THICKNESS OF THE MEMBER. INSTALL PER MANUFACTURER'S INSTRUCTIONS. NOTE: SIMPSON STRONG DRIVE SCREWS ARE DEFINED AS SELF-TAPPING. OTHER SCREWS TYPES MAY REQUIRE PRE-DRILLING. MINIMUM SCREW/BOLT SIZE #12, U.O.N.

5. STRUCTURAL MEMBERS WHOSE STRENGTH IS IMPAIRED BY IMPROPER CUTTING, DRILLING, OR EXCESSIVE DEFECTS SHALL BE REPLACED OR REINFORCED IN A MANNER ACCEPTABLE TO THE ARCHITECT.

6. FASTEN WOOD DECKING TO SUPPORTS WITH NOT LESS THAN #14 SCREWS AT 4" O.C.

7. WOOD STRUCTURAL PANELS (WSP) MUST COMPLY WITH PS 1 "U.S. PRODUCT STANDARD FOR CONSTRUCTION AND INDUSTRIAL PLYWOOD" FOR PLYWOOD CONSTRUCTION PANELS AND THE FOLLOWING REQUIREMENTS:
   A. EXTERIOR WALL SHEATHING, SIZE INDICATED ON THE DRAWINGS APA RATED SHEATHING, EXPOSURE 1 DURABILITY CLASSIFICATION.

8. FIELD TREAT ALL CUTS AND ABRASIONS IN TREATED TIMBERS IN ACCORDANCE WITH THE AMERICAN WOOD PRESERVERS ASSOCIATION STANDARD M4. TRIM ALL CUTS AND ABRASIONS BEFORE FIELD TREATMENT. COAT ALL DEPRESSIONS OR OPENINGS AROUND BOLT HOLES, JOINTS OR GAPS INCLUDING RECESSES FORMED BY COUNTER BORING, WITH PRESERVATIVE TREATMENT USED FOR TIMBER

9. UNLESS OTHERWISE NOTED, ATTACHED BLOCKING AND NAILERS TO THE STEEL FRAMING USING 3/16 INCH DIAMETER POWDER ACTUATED FASTENERS AT 24 INCHES ON CENTER, STAGGER FASTENERS AT ALTERNATE SIDES OF BEAM WEB.

10. WHERE MULTIPLE FRAMING MEMBERS ARE INDICATED: SCAB CONTINGENT MEMBERS TOGETHER WITH 16d NAILS AT 12 INCHES ON CENTER, ALTERNATING AT 2 INCHES FROM EACH EDGE.

POST-INSTALLED ANCHOR NOTES:

1. ANCHORS TO BE POST-INSTALLED ONLY WHERE INDICATED ON CONSTRUCTION DOCUMENTS. ANY SUBSTITUTE OF CAST-IN ANCHOR TO POST-INSTALLED ANCHORS MUST BE SUBMITTED AS A REQUEST FOR DEVIATION TO THE ENGINEER OF RECORD PRIOR TO CONSTRUCTION.

2. ALL POST INSTALLED ANCHORS INDICATED ON THE DRAWINGS ARE BY HILTI, INC, AND MUST BE CONSIDERED THE BASIS OF DESIGN PRODUCT. WHERE NOT EXPLICITLY INDICATED IN THE DRAWINGS, THE FOLLOWING ANCHORS/ADHESIVES MUST BE USED:
   A. ANCHORAGE TO CONCRETE
      1. ADHESIVE ANCHORS FOR CRACKED AND UNCRACKED CONCRETE USE:
         a. HILTI HIT-HY 200 SAFE SET SYSTEM WITH HILTI HOLLOW DRILL BIT (TE-CD OR TE-YD) AND VC 20/40 VACUUM SYSTEM (VC 20-U OR VC40U) WITH STEEL THREADED ROD PER ICC ESR-3187.
      2. SCREW ANCHORS FOR CRACKED AND UNCRACKED CONCRETE USE:
         a. HILTI KWIK HUS EZ SCREW ANCHORS PER ICC ESR-3027.
   B. REBAR DOWELING INTO CONCRETE
      1. ADHESIVE ANCHORS FOR CRACKED AND UNCRACKED CONCRETE USE:
         a. HILTI HIT-HY 200 SAFE SET SYSTEM WITH HILTI HOLLOW DRILL BIT (TE-CD OR TE-YD) AND VC 20/40 VACUUM SYSTEM (VC 20-U OR VC 40-U) WITH CONTINUOUSLY DEFORMED REBAR PER ICC ESR-3187.
   C. ANCHORAGE TO SOLID GROUTED MASONRY
      1. ADHESIVE ANCHORS USE:
         a. HILTI HIT-HY 270 MASONRY ADHESIVE ANCHORING SYSTEM (ICC PENDING).
         b. STEEL ANCHOR ELEMENT MUST BE HILTI HAS-E CONTINUOUSLY THREADED ROD.
      2. MECHANICAL ANCHORS USE:
         a. HILTI KWIK HUS EZ SCREW ANCHORS PER ICC ESR 3056.
   D. ANCHORAGE TO HOLLOW / MULTI-WYTHE MASONRY
      1. ADHESIVE ANCHORS USE:
         a. HILTI HIT-HY 270 MASONRY ADHESIVE ANCHORING SYSTEM PERICCESR-3342.
         b. STEEL ANCHOR ELEMENT MUST BE HILTI HAS-E CONTINUOUSLY THREADED ROD OR CONTINUOUSLY DEFORMED STEEL REBAR.
         c. THE APPROPRIATE SIZE SCREEN TUBE MUST BE USED PER ADHESIVE MANUFACTURER'S RECOMMENDATION.

3. ALTERNATE POST INSTALLED ANCHOR PRODUCTS MAY BE SUBMITTED TO THE ENGINEER FOR REVIEW AND POSSIBLE APPROVAL. ALL SUBSTITUTION REQUESTS MUST BE ACCOMPANIED BY AN ICC ESR SHOWING COMPLIANCE WITH THE RELEVANT BUILDING CODE FOR SEISMIC USES, LOAD RESISTANCE, INSTALLATION CATEGORY, AND COMPREHENSIVE INSTALLATION INSTRUCTIONS. ADHESIVE ANCHOR EVALUATION WILL ALSO CONSIDER CREEP, IN-SERVICE TEMPERATURE AND INSTALLATION TEMPERATURE. ALTERNATE PRODUCTS MAY REQUIRE MODIFICATIONS TO ANCHOR DIAMETER, SPACING, AND EMBEDMENT.

4. INSTALL ANCHORS PER THE MANUFACTURER INSTRUCTIONS, AS INCLUDED IN THE ANCHOR PACKAGING.

5. THE CONTRACTOR MUST ARRANGE FOR AN ANCHOR MANUFACTURER'S REPRESENTATIVE TO PROVIDE ONSITE INSTALLATION TRAINING FOR ALL OF THEIR ANCHORING PRODUCTS SPECIFIED. THE STRUCTURAL ENGINEER OF RECORD MUST RECEIVE DOCUMENTED CONFIRMATION THAT ALL OF THE CONTRACTOR'S PERSONNEL WHO INSTALL ANCHORS ARE TRAINED PRIOR TO THE COMMENCEMENT OF ANCHOR INSTALLATION.

6. ANCHOR CAPACITY IS DEPENDANT UPON SPACING BETWEEN ADJACENT ANCHORS AND PROXIMITY OF ANCHORS TO EDGE OF CONCRETE. INSTALL ANCHORS IN ACCORDANCE WITH SPACING AND EDGE CLEARANCES INDICATED ON THE DRAWINGS.

7. EXISTING REINFORCING BARS IN THE CONCRETE STRUCTURE MAY CONFLICT WITH SPECIFIC ANCHOR LOCATIONS. UNLESS NOTED ON THE DRAWINGS THAT THE BARS CAN BE CUT, THE CONTRACTOR MUST LOCATE THE POSITION OF THE REINFORCING BARS AT THE LOCATIONS OF THE CONCRETE ANCHORS, BY FERROSCAN OR GPR.

8. ALL POST INSTALLED ANCHORS REQUIRE CONTINUOUS INSPECTIONS BY THE OWNER'S MATERIALS TESTING AGENCY TO VERIFY INSTALLATION HAS BEEN PERFORMED IN ACCORDANCE WITH THE MANUFACTURER'S WRITTEN INSTRUCTIONS.

ABBREVIATIONS

AFF	ABOVE FINISHED FLOOR	KCJ	KEYED CONSTRUCTION JOINT
ARCH	ARCHITECT	Ld	REBAR TENSION DEVELOPMENT LENGTH
BD	BAR DIAMETER	Ldc	REBAR COMPRESSION DEVELOPMENT LENGTH
BF	BRACED FRAME	Ldh	HOOKED REBAR TENSION DEVELOPMENT LENGTH
BEJ	BUILDING EXPANSION JOINT	Ls	REBAR TENSION SPLICE LENGTH
BLDG	BUILDING	Lsc	REBAR COMPRESSION SPLICE LENGTH
BM	BEAM	L	LOW
BOD	BOTTOM OF DECK	LLH	LONG LEG HORIZONTAL
BOS	BOTTOM OF STEEL	LLV	LONG LEG VERTICAL
BOT, B	BOTTOM	LSH	LONG SIDE HORIZONTAL
BRG	BEARING	LSV	LONG SIDE VERTICAL
BTWN	BETWEEN	LTWT	LIGHTWEIGHT
C TO C	CENTER TO CENTER	LWC	LIGHTWEIGHT CONCRETE
CFMF	COLD-FORMED METAL FRAMING	MAS	MASONRY
CJ	CONTROL JOINT	MATL	MATERIAL
CL	CENTERLINE	MAX	MAXIMUM
CLR	CLEAR	MECH	MECHANICAL
CMU	CONCRETE MASONRY UNIT	MF	MOMENT FRAME
COL	COLUMN	MFR	MANUFACTURER
CONC	CONCRETE	MID	MIDDLE
CONN	CONNECTION	MIN	MINIMUM
CONSTR	CONSTRUCTION	MOD	MODIFY
CONT	CONTINUOUS	MOS	MIDDEPTH OF SLAB
COORD	COORDINATE	NOM	NOMINAL
CTR	CENTER	NS	NEAR SIDE
CTRD	CENTERED	NTS	NOT TO SCALE
DBA	DEFORMED BAR ANCHOR	OC	ON CENTER
DBL	DOUBLE	OPH	OPPOSITE HAND
DC	DIAPHRAGM CHORD	OPNG	OPENING
DCJ	DOWELED CONSTRUCTION JOINT	PAF	POWDER ACTUATED FASTENER
DIA, Ø	DIAMETER	PAR	PARALLEL
DIST	DISTANCE	PC	PIECE
DJ	DOUBLE JOIST	PEMB	PRE-ENGINEERED METAL BUILDING
DWGS	DRAWINGS	PEN	PENETRATE, PENETRATION
EA	EACH	PERP	PERPENDICULAR
EF	EACH FACE	PL	PLATE
EJ	EXPANSION JOINT	PT	POST-TENSIONED (CONC) PRESSURE TREATED (WOOD)
EL	ELEVATION	R	RADIUS
ELEV	ELEVATOR	REF	REFERENCE, REFER TO
EMBED	EMBEDMENT	REINF	REINFORCE, REINFORCED, REINFORCING
EOD	EDGE OF DECK	REQD	REQUIRED
EOS	EDGE OF SLAB	REQMTS	REQUIREMENTS
EQ	EQUAL	SCHED	SCHEDULE
EW	EACH WAY	SF	STEPPED FOOTING
EXIST	EXISTING	SGB	STEPPED GRADE BEAM
EXP	EXPANSION	SIM	SIMILAR
EXT	EXTERIOR	SJ	SAWED JOINT
FD	FLOOR DRAIN	SL	SLOPE
FDN	FOUNDATION	SOG	SLAB-ON-GRADE
FO	FACE OF	SPF	SIDEPLATE FRAME
FF EL	FINISHED FLOOR ELEVATION	STD	STANDARD
FIN	FINISH	STIFF	STIFFENER
FIN FLR	FINISHED FLOOR	TBE	TRUSS BEARING ELEVATION
FOB	FACE OF BUILDING	T&B	TOP & BOTTOM
FOC	FACE OF CONCRETE	T&G	TONGUE AND GROOVE
FOM	FACE OF MASONRY	THK	THICKNESS
FOS	FACE OF SLAB/ STUD	TOC	TOP OF CONCRETE
FRMG	FRAMING	TOF	TOP OF FOOTING
FTG	FOOTING	TOM	TOP OF MASONRY
FS	FAR SIDE	TOCP	TOP OF CONCRETE PEDESTAL
FV, ±	FIELD VERIFY	TOS	TOP OF STEEL
GALV	GALVANIZED	TS	THICKENED SLAB
GC	GENERAL CONTRACTOR	TS/STR	THICKENED SLAB AT STAIR
GEN	GENERAL	TYP	TYPICAL
GR BM	GRADE BEAM	UON	UNLESS OTHERWISE NOTED
H	HIGH	VERT	VERTICAL
HK	HOOK	W/	WITH
HORIZ	HORIZONTAL	WP	WORKING POINT
HSS	HOLLOW STRUCTURAL SECTION	WSP	WOOD STRUCTURAL PANEL(S)
HSA	HEADED STUD ANCHOR	WWR	WELDED WIRE REINFORCING
HT	HEIGHT		
HVY	HEAVY		
INT	INTERIOR		
JBE	JOIST BEARING ELEVATION		
JT	JOINT		
KCJ	KEYED CONSTRUCTION JOINT		

NORTH CAROLINA PROFESSIONAL SEAL 044996 ENGINEER SCOTT M. FRANCIS
07/27/2026

lynchmykins now IMEG
301 N WEST STREET, SUITE 105
RALEIGH, NC 27603
919.782.1833 www.imegcorp.com

IMEG RESERVES PROPRIETARY RIGHTS, INCLUDING COPYRIGHTS. TO THIS DRAWING AND THE DATA SHOWN THEREON. SAID DRAWING AND/OR DATA ARE THE EXCLUSIVE PROPERTY OF IMEG AND SHALL NOT BE USED OR REPRODUCED FOR ANY OTHER PROJECT WITHOUT THE EXPRESS WRITTEN APPROVAL AND PARTICIPATION OF IMEG. ©2025 IMEG CONSULTANTS CORP.
North Carolina Design Registration #F-1507

Susan Hatchell
Landscape Architecture, PLLC
711 W. North Street, Raleigh, NC 27603
p: 919-838-9600 f: 919-838-9700

lynchmykins now IMEG
301 N WEST STREET, SUITE 105
RALEIGH, NC 27603
919.782.1833 www.imegcorp.com

GENERAL NOTES

LAKE MYRA COUNTY PARK
Wake County, NC

REVISIONS

Date07/27/2026

MF-S003

Susan Hatchell
Landscape Architecture, PLLC
711 W. North Street, Raleigh, NC 27603
p: 919-838-9600 f: 919-838-9700

lynchmykins
now IMEG
301 N WEST STREET, SUITE 105
RALEIGH, NC 27603
919.782.1833 www.imegcorp.com

GENERAL NOTES

LAKE MYRA COUNTY PARK
Wake County, NC

NORTH CAROLINA PROFESSIONAL SEAL 044996 ENGINEER SCOTT M. FRANCIS
07/27/2026

REVISIONS

lynchmykins
now IMEG
301 N WEST STREET, SUITE 105
RALEIGH, NC 27603
919.782.1833 www.imegcorp.com

IMEG RESERVES PROPRIETARY RIGHTS, INCLUDING COPYRIGHTS, TO THIS DRAWING AND THE DATA SHOWN THEREON. SAID DRAWING AND/OR DATA ARE THE EXCLUSIVE PROPERTY OF IMEG AND SHALL NOT BE USED OR REPRODUCED FOR ANY OTHER PROJECT WITHOUT THE EXPRESS WRITTEN APPROVAL AND PARTICIPATION OF IMEG.
©2025 IMEG CONSULTANTS CORP.
North Carolina Design Registration #F-1507

Date07/27/2026

MF-S004

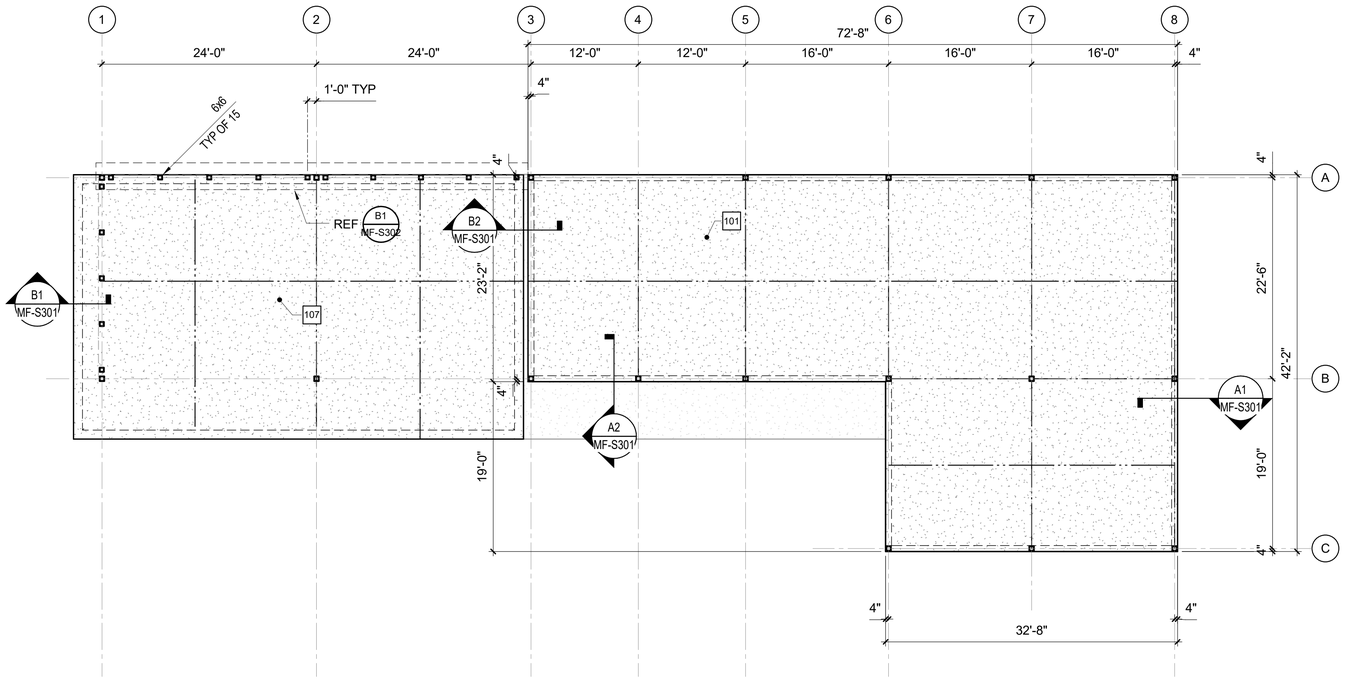

B1 MAINTENANCE FACILITY SLAB PLAN

1/8" = 1'-0"

KEY NOTES

101 5" CONCRETE SLAB-ON-GRADE OVER VAPOR RETARDER AND 4" DEPTH OF POROUS FILL. REINFORCE WITH 6x6 W2.1xW2.1 WELDED WIRE REINFORCING.

107 6" CONCRETE SLAB-ON-GRADE OVER 4" DEPTH OF POROUS FILL. REINFORCE WITH 6x6 W4xW4 WELDED WIRE REINFORCING.

FOUNDATION PLAN NOTES

A. REFERENCE ARCHITECTURAL DRAWINGS FOR DIMENSIONS TO NONBEARING WALLS, WALL CONTROL JOINTS AND OPENINGS.

B. UNLESS OTHERWISE NOTED, ALL ELEVATIONS ARE BASED ON A FINISHED FIRST FLOOR REFERENCE OF 0'-0". ACTUAL FINISHED FLOOR ELEVATION IS XX.XX'. FINISHED FLOOR ELEVATIONS AT EACH LEVEL ARE INDICATED ON SLAB PLANS. REFERENCE ARCHITECTURAL DRAWINGS FOR FINISHED FLOOR MATERIALS.

C. TOP OF ALL COLUMN AND WALL FOOTINGS MUST BE AT THE FOLLOWING ELEVATIONS UNLESS OTHERWISE NOTED ON PLAN. EXTERIOR WALL AND COLUMN FOOTINGS -1'-4". INTERIOR WALL FOOTINGS -0'-8".

D. NOT ALL UTILITY LOCATIONS ARE SHOWN ON PLAN. THE CONTRACTOR MUST COORDINATE THE LOCATIONS, SIZES, AND INVERTS OF UTILITIES. AT LOCATIONS WHERE UTILITIES PASS BELOW THE TOP OF FOOTING ELEVATION, STEP THE TOP OF FOOTING DOWN ON EACH SIDE PER THE "TYPICAL STEPPED FOOTING DETAIL" AND SLEEVE THE UTILITY THROUGH THE FOUNDATION WALL. THE CONTRACTOR MAY, AT HIS/HER OPTION, SLEEVE THE UTILITY THROUGH THE FOUNDATION PER THE "TYPICAL PIPE SLEEVE AT WALL FOOTING DETAILS."

E. UNLESS OTHERWISE INDICATED, EXTEND WALL FOOTINGS A MINIMUM OF 6 INCHES BEYOND ENDS OF WALLS.

F. NOT ALL SITE WALLS ARE SHOWN ON PLAN. CONTRACTOR MUST COORDINATE CIVIL AND LANDSCAPE DRAWINGS FOR SITE WALL INFORMATION.

G. DIMENSIONS SHOWN ON FOUNDATION PLAN ARE TO COLUMN GRIDLINES AND FACE OF FOUNDATION WALLS, UNLESS OTHERWISE NOTED.

SLAB PLAN NOTES

A. REFERENCE ARCHITECTURAL DRAWINGS FOR EXACT LIMITS OF SLAB DEPRESSIONS AND OMITTED SLABS.

B. FLOOR SINKS AND DRAINS ARE NOT SHOWN ON PLAN. REFERENCE PME DRAWINGS FOR LOCATIONS.

C. REFERENCE CIVIL AND LANDSCAPE DRAWINGS FOR EXTERIOR CONCRETE SLABS AND PAVING.

D. SLAB-ON-GRADE JOINTS MUST BE SAWED JOINTS OR KEYED CONSTRUCTION JOINTS, UNLESS OTHERWISE NOTED. CONTRACTOR MUST COORDINATE ALL SLAB JOINTS WITH JOINTS IN BONDED FLOOR FINISHES. REFERENCE ARCHITECTURAL DRAWINGS FOR FLOOR FINISH JOINT LOCATIONS.

E. PLACE (1) #4 x 3'-0" IN MIDDEPTH OF SLAB AT RE-ENTRANT CORNERS WHERE A SLAB JOINT DOES NOT OCCUR.

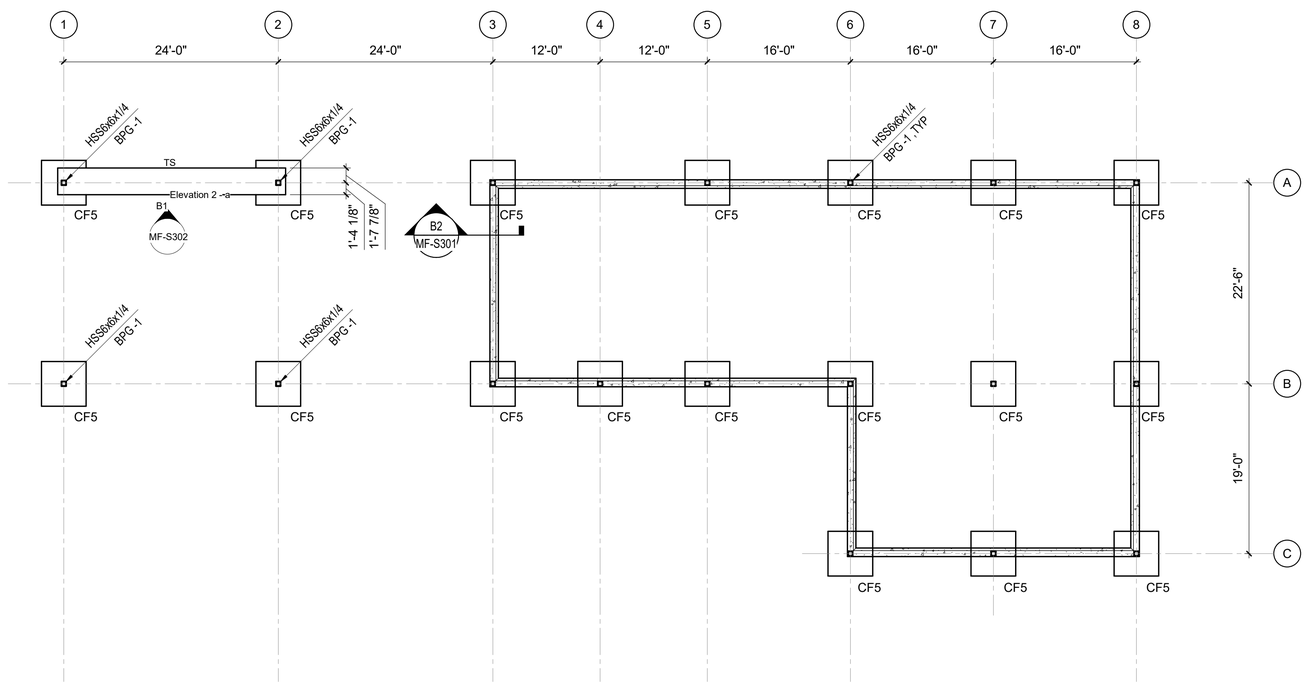

A1 MAINTENANCE FACILITY FOUNDATION PLAN

1/8" = 1'-0"

COLUMN FOOTING SCHEDULE

MARK	SIZE			REINFORCING		REMARKS
	LENGTH	WIDTH	DEPTH	BOTTOM	TOP	
CF4	4' - 0"	4' - 0"	1'-3"	(4) #5 EW	-	-
CF5	5' - 0"	5' - 0"	1'-3"	(5) #5 EW	-	-
CF6	6' - 0"	6' - 0"	1'-2"	(6) #6 EW	-	-

WALL FOOTING SCHEDULE

MARK	SIZE		REINFORCING		REMARKS
	WIDTH	DEPTH	CONTINUOUS	TRANSVERSE	
WF2	2' - 0"	1'-0"	( ) #_ BOT	#_ AT __" OC BOT	-
WF2.5	2' - 6"	1'-0"	(3) #5 BOT	#_ AT __" OC BOT	-
WF3	3' - 0"	1'-0"	(4) #5 BOT	#_ AT __" OC BOT	-
WF4	4' - 0"	1'-0"	(5) #5 BOT	#_ AT __" OC BOT	-
WF6	6' - 0"	1'-0"	(7) #5 BOT	#_ AT __" OC BOT	-

Susan Hatchell
Landscape Architecture, PLLC
711 W. North Street, Raleigh, NC 27603
p: 919-838-9600 f: 919-838-9700

lynchmykins now IMEG
301 N WEST STREET, SUITE 105
RALEIGH, NC 27603
919.782.1833 www.imegcorp.com

NORTH CAROLINA PROFESSIONAL SEAL 044996 ENGINEER SCOTT M. FRANCIS
07/27/2026

lynchmykins now IMEG
301 N WEST STREET, SUITE 105
RALEIGH, NC 27603
919.782.1833 www.imegcorp.com

IMEG RESERVES PROPRIETARY RIGHTS, INCLUDING COPYRIGHTS. TO THIS DRAWING AND THE DATA SHOWN THEREON. SAID DRAWING AND/OR DATA ARE THE EXCLUSIVE PROPERTY OF IMEG AND SHALL NOT BE USED OR REPRODUCED FOR ANY OTHER PROJECT WITHOUT THE EXPRESS WRITTEN APPROVAL AND PARTICIPATION OF IMEG. ©2025 IMEG CONSULTANTS CORP.

North Carolina Design Registration #F-1507

MAINTENANCE FACILITY SLAB AND FOUNDATION PLAN

LAKE MYRA COUNTY PARK
Wake County, NC

REVISIONS

Date07/27/2026

MF-S101

FRAMING PLAN NOTES

A. REFERENCE FOUNDATION PLAN AND ARCHITECTURAL DRAWINGS FOR DIMENSIONS NOT SHOWN.

B. TOP OF FINISHED FLOOR ELEVATION MUST BE AS NOTED ON SLAB PLANS.

C. COMPOSITE STEEL BEAM FRAMING MUST BE EQUALLY SPACED BETWEEN POINTS OF KNOWN DIMENSIONS (NOT TO EXCEED 10'-0" ON-CENTER).

D. CONCRETE ON ELEVATED METAL DECKS MUST BE POURED TO THE THICKNESS INDICATED.

E. AT STEEL ROOF FRAMING, BOTTOM OF DECK ELEVATIONS ARE SHOWN ON PLAN. INTERMEDIATE ELEVATIONS MUST BE STRAIGHT LINES BETWEEN GIVEN ELEVATIONS. INTERPOLATE AS REQUIRED FOR INTERMEDIATE BEARING ELEVATIONS, UNLESS OTHERWISE NOTED.

F. COORDINATE AND VERIFY ALL MEMBER LOCATIONS, DIMENSIONS, WEIGHTS, OPENING SIZES, AND CURB DIMENSIONS FOR ALL MECHANICAL EQUIPMENT WITH THE ACTUAL EQUIPMENT FURNISHED. INCLUDE THIS INFORMATION ON THE JOIST AND STRUCTURAL STEEL SHOP DRAWINGS.

KEY NOTES

301 2x6 TONGUE AND GROOVE WOOD DECKING WITH 9/16" PLYWOOD.

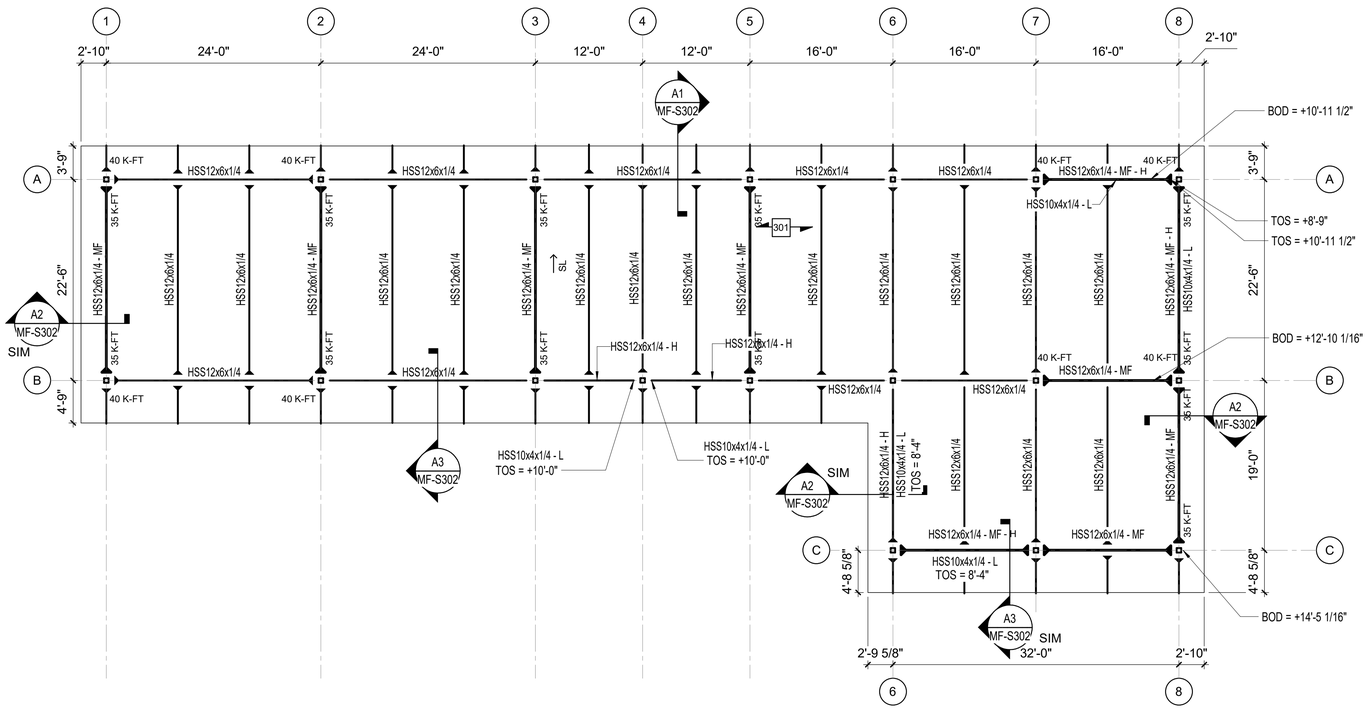

A1 MAINTENANCE FACILITY ROOF FRAMING PLAN
1/8" = 1'-0"

Susan Hatchell
Landscape Architecture, PLLC
711 W. North Street, Raleigh, NC 27603
p: 919-838-9600 f: 919-838-9700

lynchmykins now IMEG
301 N WEST STREET, SUITE 105
RALEIGH, NC 27603
919.782.1833 www.imegcorp.com

MAINTENANCE FACILITY ROOF FRAMING PLAN

LAKE MYRA COUNTY PARK
Wake County, NC

NORTH CAROLINA PROFESSIONAL SEAL 044996 ENGINEER SCOTT M. FRANCIS
07/27/2026

REVISIONS

lynchmykins now IMEG
301 N WEST STREET, SUITE 105
RALEIGH, NC 27603
919.782.1833 www.imegcorp.com

IMEG RESERVES PROPRIETARY RIGHTS, INCLUDING COPYRIGHTS. TO THIS DRAWING AND THE DATA SHOWN THEREON. SAID DRAWING AND/OR DATA ARE THE EXCLUSIVE PROPERTY OF IMEG AND SHALL NOT BE USED OR REPRODUCED FOR ANY OTHER PROJECT WITHOUT THE EXPRESS WRITTEN APPROVAL AND PARTICIPATION OF IMEG. ©2025 IMEG CONSULTANTS CORP.

North Carolina Design Registration #F-1507

Date07/27/2026

MF-S102

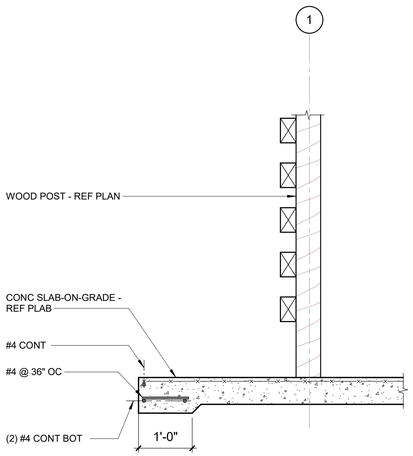

B1 SECTION
3/4" = 1'-0"

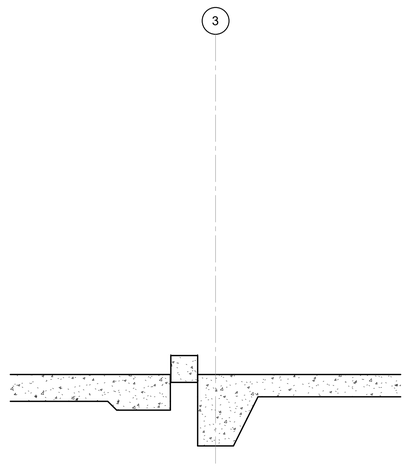

B2 SECTION
3/4" = 1'-0"

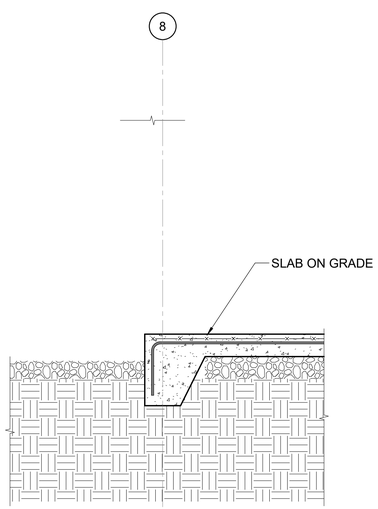

A1 SECTION AT SLAB EDGE
3/4" = 1'-0"

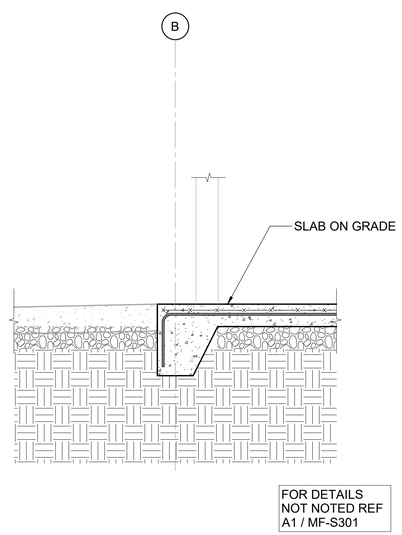

A2 SECTION AT SLAB EDGE
3/4" = 1'-0"

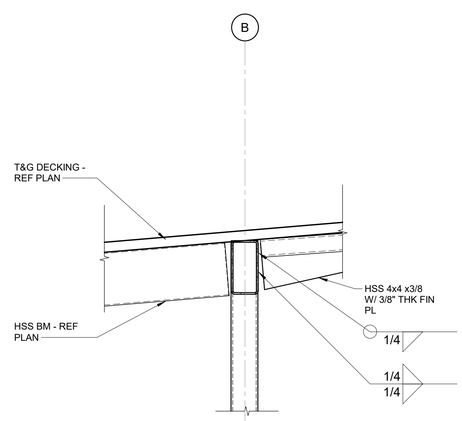

A3 CONNECTION DETAIL
3/4" = 1'-0"

Susan Hatchell
Landscape Architecture, PLLC
711 W. North Street, Raleigh, NC 27603
p: 919-838-9600 f: 919-838-9700

lynchmykins now IMEG
301 N WEST STREET, SUITE 105
RALEIGH, NC 27603
919.782.1833 www.imegcorp.com

SECTIONS

LAKE MYRA COUNTY PARK
Wake County, NC

NORTH CAROLINA PROFESSIONAL SEAL 044996 ENGINEER SCOTT M. FRANCIS
07/27/2026

REVISIONS

lynchmykins now IMEG
301 N WEST STREET, SUITE 105
RALEIGH, NC 27603
919.782.1833 www.imegcorp.com

IMEG RESERVES PROPRIETARY RIGHTS, INCLUDING COPYRIGHTS, TO THIS DRAWING AND THE DATA SHOWN THEREON. SAID DRAWING AND/OR DATA ARE THE EXCLUSIVE PROPERTY OF IMEG AND SHALL NOT BE USED OR REPRODUCED FOR ANY OTHER PROJECT WITHOUT THE EXPRESS WRITTEN APPROVAL AND PARTICIPATION OF IMEG. ©2025 IMEG CONSULTANTS CORP.
North Carolina Design Registration #F-1507

Date07/27/2026

MF-S301

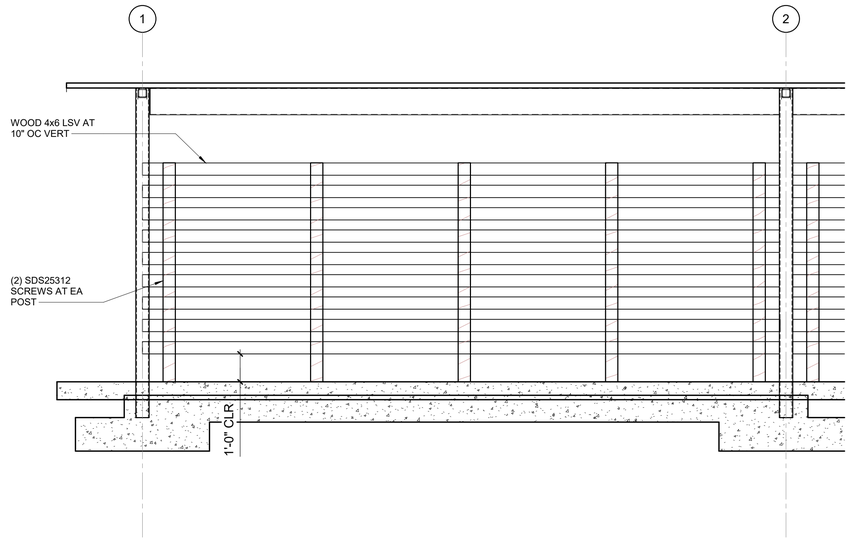

B1 SCREENWALL ELEVATION
3/8" = 1'-0"

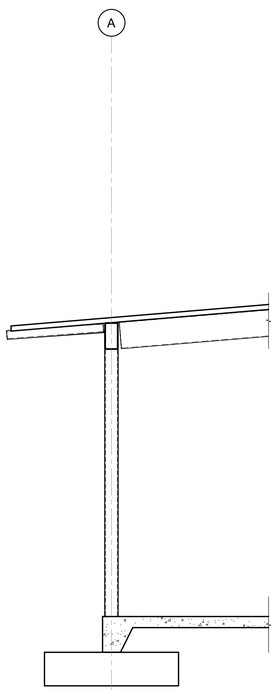

A1 SECTION
3/8" = 1'-0"

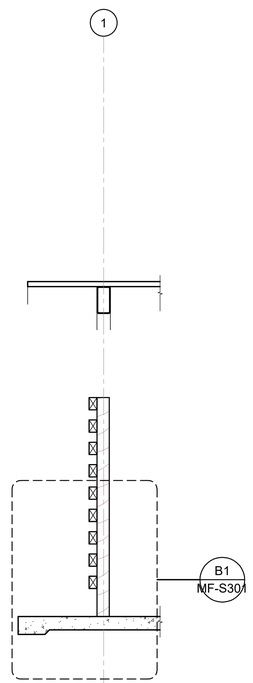

A2 SECTION
3/8" = 1'-0"

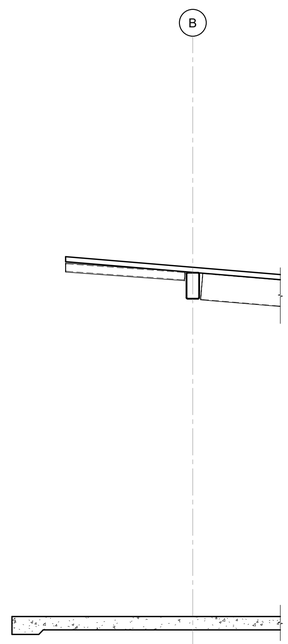

A3 SECTION
3/8" = 1'-0"

Susan Hatchell
Landscape Architecture, PLLC
711 W. North Street, Raleigh, NC 27603
p: 919-838-9600 f: 919-838-9700

lynchmykins
now IMEG
301 N WEST STREET, SUITE 105
RALEIGH, NC 27603
919.782.1833 www.imegcorp.com

SECTIONS

LAKE MYRA COUNTY PARK
Wake County, NC

NORTH CAROLINA PROFESSIONAL SEAL 044996 ENGINEER SCOTT M. FRANCIS
07/27/2026

lynchmykins
now IMEG
301 N WEST STREET, SUITE 105
RALEIGH, NC 27603
919.782.1833 www.imegcorp.com

IMEG RESERVES PROPRIETARY RIGHTS, INCLUDING COPYRIGHTS, TO THIS DRAWING AND THE DATA SHOWN THEREON. SAID DRAWING AND/OR DATA ARE THE EXCLUSIVE PROPERTY OF IMEG AND SHALL NOT BE USED OR REPRODUCED FOR ANY OTHER PROJECT WITHOUT THE EXPRESS WRITTEN APPROVAL AND PARTICIPATION OF IMEG. ©2025 IMEG CONSULTANTS CORP.
North Carolina Design Registration #F-1507

REVISIONS

Date07/27/2026

MF-S302

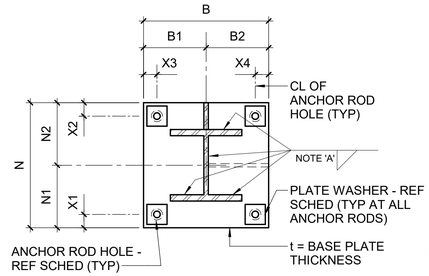

WF

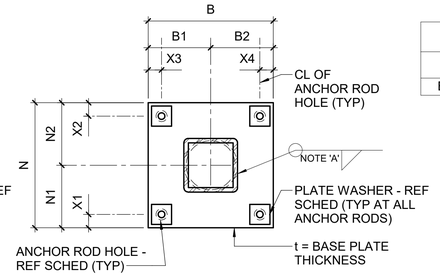

HSS

COLUMN BASE PLATE SCHEDULE - GRAVITY COLUMNS

MARK	BASE PLATE DIMENSIONS											ANCHOR RODS			REMARKS
	B	N	t	B1	B2	N1	N2	X1	X2	X3	X4	DIAMETER	QUANTITY	EMBED	
BPG-1	16"	16"	3/4"	8"	8"	8"	8"	1 1/2"	1 1/2"	1 1/2"	1 1/2"	3/4"	4	9"	

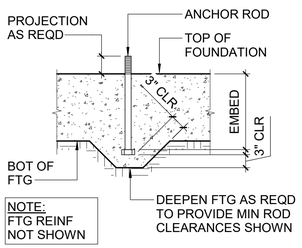

ANCHOR ROD
SHALLOW FOUNDATIONS

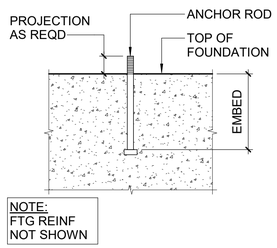

ANCHOR ROD
DEEP FOUNDATIONS

ANCHOR ROD HOLES AND WASHER SCHEDULE

ANCHOR ROD	OVERSIZED HOLE WITH PLATE WASHER				STANDARD HOLE	
	BASE PLATE HOLE	WASHER SIZE	WASHER HOLE	WASHER THICKNESS	BASE PLATE HOLE	WASHER
3/4"Ø	1 5/16"Ø	2" SQ	13/16"Ø	1/4"	1 1/16"Ø	ASTM F844
7/8"Ø	1 9/16"Ø	2 1/2" SQ	15/16"Ø	5/16"	1 3/16"Ø	ASTM F844
1"Ø	1 13/16"Ø	3" SQ	1 1/16"Ø	3/8"	1 1/2"Ø	ASTM F844

NOTE:
A. PROVIDE MINIMUM SIZE WELD PER AISC TABLE J2.4.

B. GENERAL CONTRACTOR'S OPTION TO USE STANDARD OR OVERSIZED HOLES IN GRAVITY COLUMN BASE PLATES. NO WELDING REQUIRED AT PLATE WASHERS USED WITH OVERSIZED HOLES.

C1 GRAVITY COLUMN BASE PLATE AND ANCHOR ROD DETAILS
NTS

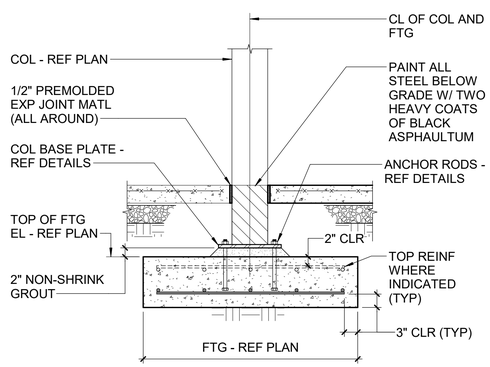

B1 TYPICAL COLUMN & FOOTING DETAIL
NTS

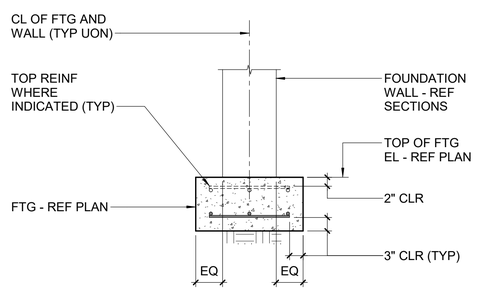

B2 TYPICAL WALL FOOTING DETAIL
NTS

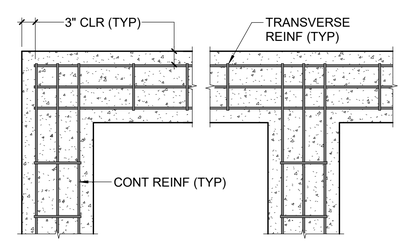

B3 TYPICAL WALL FOOTING CORNER & INTERSECTION DETAILS
NTS

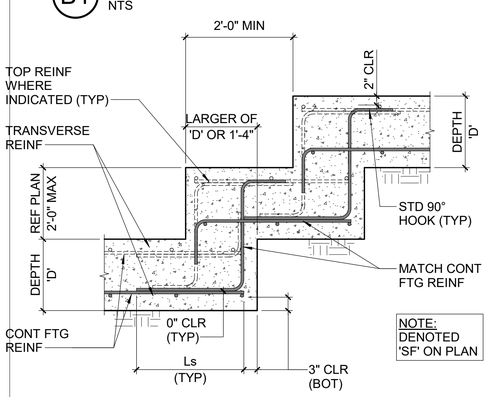

A1 TYPICAL STEPPED WALL FOOTING DETAIL
NTS

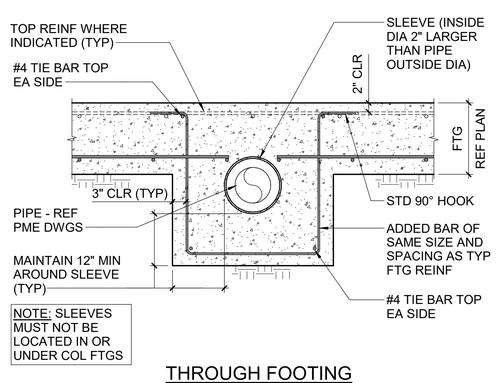

THROUGH FOOTING

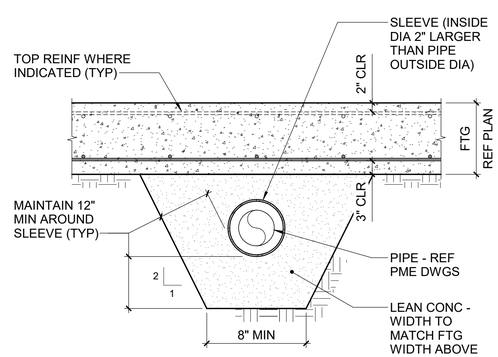

BELOW FOOTING

A2 TYPICAL PIPE SLEEVE AT WALL FOOTING DETAILS
NTS

Susan Hatchell
Landscape Architecture, PLLC
711 W. North Street, Raleigh, NC 27603
p: 919-838-9600 f: 919-838-9700

lynchmykins
now IMEG
301 N WEST STREET, SUITE 105
RALEIGH, NC 27603
919.782.1833 www.imegcorp.com

TYPICAL DETAILS

LAKE MYRA COUNTY PARK
Wake County, NC

NORTH CAROLINA PROFESSIONAL ENGINEER SEAL 044996 SCOTT M. FRANCIS
07/27/2026

lynchmykins
now IMEG
301 N WEST STREET, SUITE 105
RALEIGH, NC 27603
919.782.1833 www.imegcorp.com

IMEG RESERVES PROPRIETARY RIGHTS, INCLUDING COPYRIGHTS, TO THIS DRAWING AND THE DATA SHOWN THEREON. SAID DRAWING AND/OR DATA ARE THE EXCLUSIVE PROPERTY OF IMEG AND SHALL NOT BE USED OR REPRODUCED FOR ANY OTHER PROJECT WITHOUT THE EXPRESS WRITTEN APPROVAL AND PARTICIPATION OF IMEG. ©2025 IMEG CONSULTANTS CORP.
North Carolina Design Registration #F-1507

REVISIONS

Date07/27/2026

MF-S501

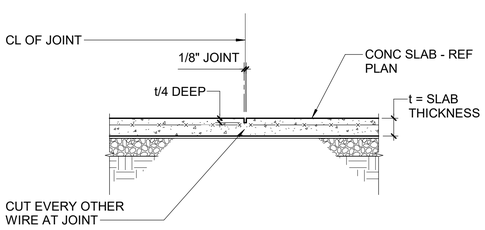

B1 TYPICAL SAWED JOINT DETAIL
NTS

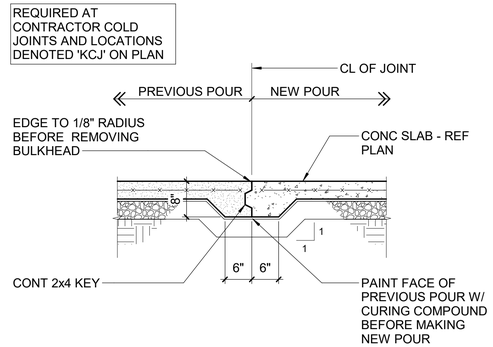

B2 TYPICAL KEYED CONSTRUCTION JOINT DETAIL
NTS

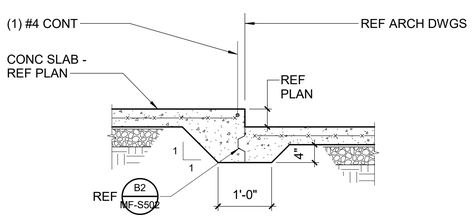

GREATER THAN 4"

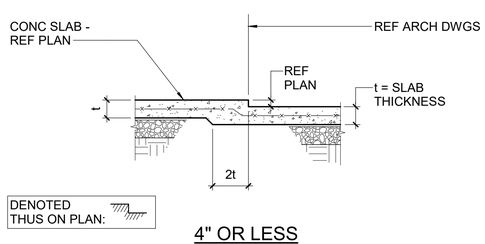

4" OR LESS

A1 TYPICAL DEPRESSED SLAB DETAILS
NTS

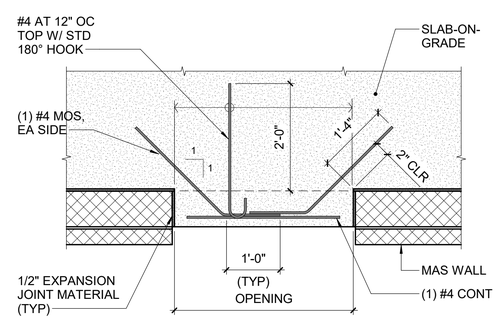

PLAN

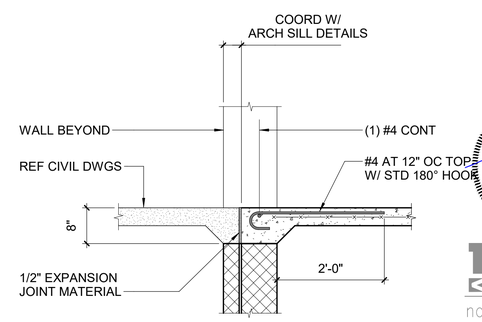

SECTION

A2 TYPICAL EXTERIOR DOORS / OPENINGS DETAIL
NTS

NORTH CAROLINA PROFESSIONAL SEAL 044996 ENGINEER SCOTT M. FRANCIS
07/27/2026

lynchmykins now IMEG
301 N WEST STREET, SUITE 105
RALEIGH, NC 27603
919.782.1833 www.imegcorp.com

IMEG RESERVES PROPRIETARY RIGHTS, INCLUDING COPYRIGHTS, TO THIS DRAWING AND THE DATA SHOWN THEREON. SAID DRAWING AND/OR DATA ARE THE EXCLUSIVE PROPERTY OF IMEG AND SHALL NOT BE USED OR REPRODUCED FOR ANY OTHER PROJECT WITHOUT THE EXPRESS WRITTEN APPROVAL AND PARTICIPATION OF IMEG. ©2025 IMEG CONSULTANTS CORP.
North Carolina Design Registration #F-1507

Susan Hatchell
Landscape Architecture, PLLC
711 W. North Street, Raleigh, NC 27603
p: 919-838-9600 f: 919-838-9700

lynchmykins now IMEG
301 N WEST STREET, SUITE 105
RALEIGH, NC 27603
919.782.1833 www.imegcorp.com

TYPICAL DETAILS

LAKE MYRA COUNTY PARK
Wake County, NC

REVISIONS

Date07/27/2026

MF-S502

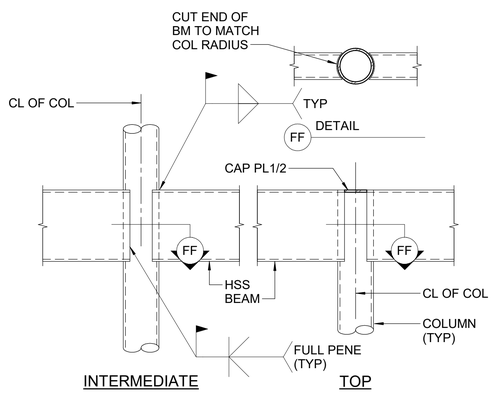

B1 TYPICAL HSS BEAM TO HSS ROUND COLUMN MOMENT CONNECTION DETAILS
NTS

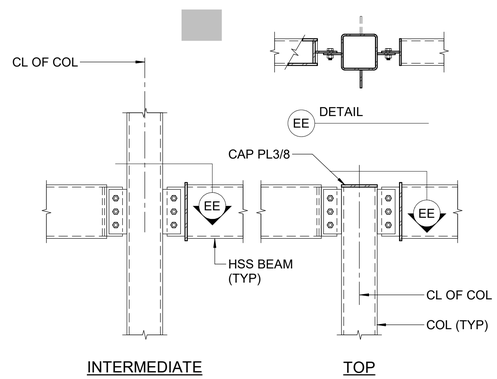

B2 TYPICAL HSS BEAM TO HSS COLUMN CONNECTION DETAILS
NTS

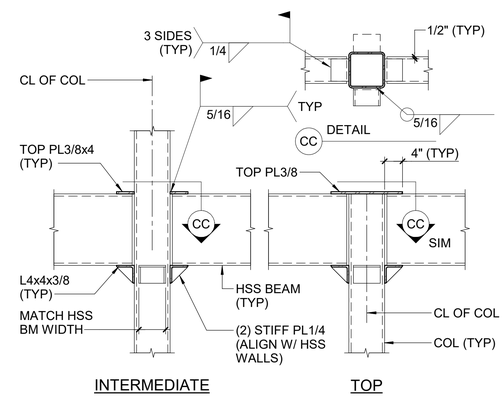

B3 TYPICAL HSS BEAM TO HSS COLUMN CONNECTION DETAILS
NTS

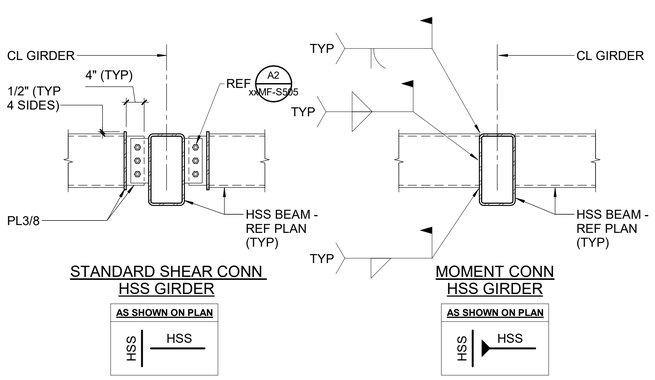

A1 TYPICAL HSS BEAM TO GIRDER CONNECTION DETAILS
NTS

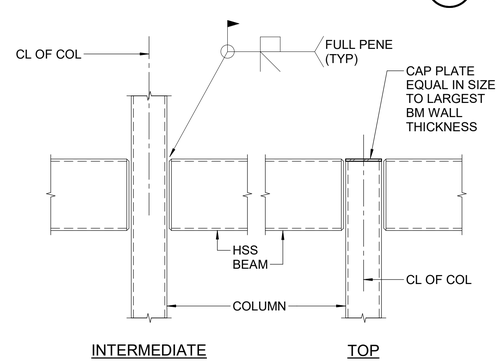

A2 TYPICAL HSS BEAM TO HSS COLUMN MOMENT CONNECTION DETAILS
NTS

Susan Hatchell
Landscape Architecture, PLLC
711 W. North Street, Raleigh, NC 27603
p: 919-838-9600 f: 919-838-9700

lynchmykins now IMEG
301 N WEST STREET, SUITE 105
RALEIGH, NC 27603
919.782.1833 www.imegcorp.com

TYPICAL DETAILS

LAKE MYRA COUNTY PARK
Wake County, NC

NORTH CAROLINA PROFESSIONAL SEAL 044996 ENGINEER SCOTT M. FRANCIS
07/27/2026

REVISIONS

lynchmykins now IMEG
301 N WEST STREET, SUITE 105
RALEIGH, NC 27603
919.782.1833 www.imegcorp.com

IMEG RESERVES PROPRIETARY RIGHTS, INCLUDING COPYRIGHTS, TO THIS DRAWING AND THE DATA SHOWN THEREON. SAID DRAWING AND/OR DATA ARE THE EXCLUSIVE PROPERTY OF IMEG AND SHALL NOT BE USED OR REPRODUCED FOR ANY OTHER PROJECT WITHOUT THE EXPRESS WRITTEN APPROVAL AND PARTICIPATION OF IMEG. ©2025 IMEG CONSULTANTS CORP.
North Carolina Design Registration #F-1507

Date07/27/2026

MF-S503

General Plan Symbols

Symbol	Description
(triangle)	Plan Revision Number
(circle)	Detail Number on Sheet
	Sheet Number Where Detail is Placed
1 (hexagon)	Keynote Symbol
	Continuation Symbol
	Point Where New Connects To Existing
ROOM 1	Room Name / Number
	Area Being Demolished
	Area Not In Contract

Plumbing Symbols

Symbol	Description
2"	Nominal Pipe Size
	Above Ground Piping
	Below Ground Piping
1/8" / 12" SLOPE	Pipe Slope (When Applicable)
(E)	Existing Pipe To Remain
	Pipe To Be Demolished
CW	Domestic Cold-Water
NPW	Non-Potable Water
S-CW	Soft Cold-Water
F-CW	Filtered Cold-Water
RO	Reverse Osmosis Water
HW	Domestic Hot-Water
HW 140°	Domestic Hot-Water 140°
HW-R	Hot-Water Recirculation
HW-R 140°	Hot-Water Recirculation 140°
SS	Sanitary Drain
V	Sanitary Vent
WV	Sanitary Wet Vent
CWV	Combination DWV
CD	Condensate Drain
ID	Indirect Drain
GW	Grease Waste
GV	Grease Vent
OW	Oil Waste
OV	Oil Vent
PD	Pump Discharge
SHWR	Solar Water Return
SHWS	Solar Water Supply
SD	Storm Drain
OSD	Storm Overflow
CA	Compressed Air
G	Natural Gas
LP	Liquid Propane
	Pipe Rise / Drop

Pipe Accessory Notes

Symbol	Description
4" FCO	Cleanout
2" BACKWATER	Swing Check
2" CHECK	Check Valve
2" CHECK	Alternate Check Valve
2" BALANCE	Balancing Valve
2" CIRC	Circuit Setter
2" GATE	Gate Valve
2" QUICK	Quick Opening Valve
2" S/O	Ball Valve
2" STRAIN	Fluid Strainer
S 1" GAS-CNTRL	Emergency Gas Shutoff
1" PLUG	Plug Valve
1" GAS COCK	Gas Shutoff Cock
1" REG	Gas Regulator
T/P 1" T/V	Thermostatic Valve
TP PRIMER	Trap Primer
M 2" M-CNTRL	Elec. Control Valve
T/P TMV-XT/P	Mixing Valve
EM TMVEM	Emergency Mixer
2" PRV	Pressure Reducing Valve
W 2" METER	Water Meter
IR 1 1/2" METER	Irrigation Meter
	Double Check Valve
	Reduced Pressure Zone

Plumbing Fixture Notes

Symbol	Description
Floor Drain	Design Size
0" FD-1	Identity Type
2 DFU	Drainage Fixture Units
2" FD-3	Floor Drain w/ Deep Seal Trap
2" FD-3P	Floor Drain w/ Trap Primer "P" Indicates Primer Connection
2" FD-7	Floor Drain w/ Integral Cleanout
3" AD-1	Area Drain (No Trap)
6" DD-1	Deck Drain
3" HD-1	Hub Drain (Funnel Type)
3" FS-4	Floor Sink
8" SD-12	Roof Drain
6" SD-1	Combination Drain
2000 SF	Rainfall Surface Area

Abbreviations

Ø	ROUND
ABV	ABOVE
AC	AIR CONDITIONING
AD	AREA DRAIN
ADD	ADDENDUM
AFF	ABOVE FINISHED FLOOR
AFUE	ANNUAL FUEL UTILIZATION EFFICIENCY
ALT	ALTERNATE
AP	ACCESS PANEL
ARCH	ARCHITECT/ARCHITECTURAL
BFF	BELOW FINISHED FLOOR
BLW	BELOW
BTU	BRITISH THERMAL UNITS
BTUH	BRITISH THERMAL UNITS PER HOUR
CAP	CAPACITY
CB	CATCH BASIN
CFM	CUBIC FEET PER MINUTE
CLG	CEILING
CO	CLEAN OUT
CW	COLD WATER
D	DEGREE
DB	DRY BULB
DIA	DIAMETER
DN	DOWN
DW	DISTILLED WATER
EA	EACH
EAT	ENTERING AIR TEMPERATURE
ELEC	ELECTRICAL
EQUIP	EQUIPMENT
EWC	ELECTRIC WATER COOLER
EWT	ENTERING WATER TEMPERATURE
E/A	EXHAUST AIR
EXIST	EXISTING
F	DEGREES FAHRENHEIT
FCO	FLOOR CLEAN OUT
FD	FLOOR DRAIN
FDC	FIRE DEPARTMENT CONNECTION
FL	FLOOR
FO	FUEL OIL
FOV	FUEL OIL VENT
FOR	FUEL OIL RETURN
FOS	FUEL OIL SUPPLY
FPM	FEET PER MINUTE
FS	FLOOR SINK
FT	FOOT/FEET
FTR	FIN TUBE RADIATION
GAL	GALLON
GF	GAS-FIRED
GC	GENERAL CONTRACTOR
GPM	GALLONS PER MINUTE
GW	GREASE WASTE
HB	HOSE BIB
HP	HORSE POWER
HTG	HEATING
HTR	HEATER
HW	HOT WATER
HYD	HYDRANT
ID	INDIRECT
IN	INCH
INV	INVERT
LB	POUND
LB/HR	POUNDS PER HOUR
LAT	LEAVING AIR TEMPERATURE
LP	LOW PRESSURE
LPG	LIQUEFIED PETROLEUM GAS
LVR	LOUVER
LWT	LEAVING WATER TEMPERATURE
M/A	MIXED AIR
MAX	MAXIMUM
MBH	ONE THOUSAND BTU PER HOUR
MCF	ONE THOUSAND CUBIC FEET
MD	MOTORIZED DAMPER
MECH	MECHANICAL
MFR	MANUFACTURER
MIN	MINIMUM
MISC	MISCELLANEOUS
MTR	MOTOR
MU/A	MAKE-UP/AIR
NC	NOISE CRITERIA
NC	NORMALLY CLOSED
NIC	NOT IN CONTRACT
NO	NUMBER
NO	NORMALLY OPEN
NTS	NOT TO SCALE
O	OXYGEN
O/A	OUTSIDE AIR
ORD	OVERFLOW ROOF DRAIN
PD	PRESSURE DROP
PIV	POST INDICATOR VALVE
PLBG	PLUMBING
PRESS	PRESSURE
PRV	PRESSURE REDUCING VALVE
PSI	POUNDS PER SQUARE INCH
PSIG	POUNDS PER SQUARE INCH GAUGE
PWR	POWER
R	DUCT RISER
R/A	RETURN AIR
RCP	RADIANT CEILING PANEL
RD	ROOF DRAIN
REC	RECESSED
RED	REDUCER
RH	RELATIVE HUMIDITY
RL/A	RELIEF AIR
RM	ROOM
RPM	REVOLUTIONS PER MINUTE
RW	RAIN WATER
SF	SQUARE FOOT
S/A	SUPPLY AIR
SAN	SANITARY
SF	SQUARE FOOT
SD	SMOKE DAMPER
SM	SURFACE MOUNT
SP	STANDPIPE
SP	STATIC PRESSURE
STM	STEAM
T	THERMOSTAT
TD	TEMPERATURE DROP
TDR	TRENCH DRAIN
TEMP	TEMPERATURE
TYP	TYPICAL
UG	UNDERGROUND
VAC	VACUUM
V	VENT
VAV	VARIABLE AIR VOLUME
VENT	VENTILATION
VTR	VENT THROUGH ROOF
W	WASTE
WB	WET BULB
WCO	WALL CLEAN OUT
WH	WALL HYDRANT

Equipment Abbreviations

AC	AIR CONDITIONING UNIT
ACCU	AIR COOLING CONDENSING UNIT
AHU	AIR HANDLING UNIT
AS	AIR SEPARATOR
B	BOILER
CH	CHILLER
CT	COOLING TOWER
CUH	CABINET UNIT HEATER
CHWP	CHILLED WATER PUMP
DBP	DOMESTIC WATER BOOSTER PUMP
DC	DUCT MOUNTED COIL
DCP	DOMESTIC WATER CIRCULATING PUMP
EF	EXHAUST FAN
EDC	ELECTRIC DUCT COIL
ET	EXPANSION TANK
EWH	ELECTRIC WATER HEATER
FCU	FAN COIL UNIT
FP	FIRE PUMP
GI	GREASE INTERCEPTOR
GRV	GRAVITY ROOF VENTILATOR
HWP	HEATING WATER PUMP
HRU	HEAT RECOVERY UNIT
PRV	POWER ROOF VENTILATOR
RE	RETURN/EXHAUST FAN
RTU	ROOFTOP UNIT
SP	SUMP PUMP
UH	UNIT HEATER
WH	WATER HEATER

* NOTE *

ALL OF GENERAL NOTES ON THIS SHEET ARE TO BE APPLIED TO ALL OTHER DRAWINGS IN THIS SET.THE SYMBOLS AND ABBREVIATIONS SHOWN ON THIS SHEET MAY OR MAY NOT BE USED IN THIS SET OF DRAWINGS.

Plumbing General Notes

A PITCH UNDERFLOOR SANITARY WASTE PIPING AT 1/8" PER FOOT, UNLESS NOTED OTHERWISE.

B PITCH UNDERFLOOR STORM PIPING 3" AND GREATER AT 1/8" PER FOOT, UNLESS NOTED OTHERWISE. PITCH ALL OTHER STORM PIPING AT 1/4" PER FOOT UNLESS OTHERWISE NOTED.

C FIELD VERIFY LOCATION AND INVERTS OF SITE UTILITIES PRIOR TO INSTALLATION.

D ROUTE DOMESTIC WATER, SANITARY SEWER AND STORM SEWER SERVICES TO SITE UTILITIES 5'-0" FROM BUILDING UNLESS NOTED OTHERWISE. REFER TO CIVIL PLANS.

E WASTE AND VENT PIPING BELOW FLOOR AND THROUGH FLOOR SHALL BE 2" MINIMUM.

F PROVIDE CLEANOUT IN ACCESSIBLE LOCATION AT THE BASE OF ALL PLUMBING RISERS.

Plumbing Notes

1 BEFORE STARTING ANY WORK, VERIFY THE ADEQUACY, LOCATION, SIZE, AND AVAILABILITY OF ALL UTILITIES CONCERNED, INCLUDING SEWER INVERT ELEVATIONS, AND WATER PRESSURE.

2 THESE PLANS ARE DIAGRAMMATIC IN NATURE AND SHALL NOT BE SCALED TO DETERMINE THE EXACT LOCATION OR EXTENT OF THE WORK. CONTRACTOR SHALL VERIFY ALL DIMENSIONS IN THE FIELD PRIOR TO CONSTRUCTION.

3 THE CONTRACTOR SHALL COORDINATE WITH ALL OTHER TRADES FOR CLEARANCES AND WORK INCLUDED PRIOR TO START OF WORK.

4 ALL VENTS THRU ROOF SHALL BE MINIMUM OF TEN FEET FROM ANY FRESH AIR INTAKES.

5 CLEANOUTS SHALL BE INSTALLED PER CODE REQUIREMENTS.

6 PENETRATIONS OF RATED ASSEMBLIES SHALL BE FIRE STOPPED. FIRE STOPPING SHALL BE AN APPROVED MATERIAL AS PRESCRIBED IN STATE. FIRE MARSHALL STANDARD 43-1, AND SHALL BE U.L. LISTED.

7 COORDINATE WITH ELECTRICAL SECTION PRIOR TO ORDERING EQUIPMENT FOR AVAILABLE VOLTAGE AT EQUIPMENT LOCATIONS.

8 ALL FIXTURES SHALL BE PROTECTED DURING CONSTRUCTION FROM ANY DAMAGE. REFINISHED FIXTURES WILL NOT BE ACCEPTABLE UNDER ANY CONDITIONS.

9 HANDICAPPED USE PLUMBING FIXTURES SHALL BE MOUNTED AT REQUIRED HEIGHTS AND WITH ALL RELATED ACCESSORIES AS REQUIRED BY THE ADMINISTRATIVE AUTHORITIES.

10 ALL HOSE BIBBS SHALL HAVE AN APPROVED VACUUM BREAKER.

11 PROVIDE FLASHING AND/OR COUNTER FLASHING OF ALL EXTERIOR PENETRATIONS.

12 UNLESS SPECIFICALLY SHOWN ON THESE PLANS, NO STRUCTURAL MEMBER SHALL BE CUT, DRILLED, NOTCHED OR WELDED WITHOUT PRIOR WRITTEN AUTHORIZATION FROM THE STRUCTURAL ENGINEER.

13 WATER SUPPLY PIPING BELOW GRADE UNDER CONCRETE SLABS SHALL BE INSTALLED SUCH THAT NO JOINTS ARE LOCATED BENEATH THE SLAB. WHERE NECESSARY, PROVIDE OFFSET UP IN FINISHED WALL OR SIMILAR TO ACCOMMODATE JOINTS. PROVIDE LOCKING ACCESS PANEL UNLESS DIRECTED OTHERWISE. COORDINATE FINISH WITH ARCHITECT.

14.1 WATER CLOSET = 1.28 GPF MAX

14.2 URINAL = 0.125 GPF MAX

14.3 SHOWERHEAD = 1.8 GPM MAX

14.4 LAVATORY FAUCETS = 0.5 GPM MAX

14.5 SINK FAUCETS = 1.8 GPM MAX

15 HANGERS, CLAMPS AND GUIDES FURNISHED FOR SUPPORT OF NON-METALLIC PIPES SHALL BE PADDED WITH 1/8" THICK RUBBER, NEOPRENE, OR SOFT RESILIENT CLOTH.

16 COORDINATE WITH MECHANICAL AND ELECTRICAL CONTRACTORS TO ENSURE PROPER CLEARANCE ABOVE ELECTRICAL SWITCHBOARDS, SWITCHGEAR, PANELBOARDS, AND MOTOR CONTROL CENTERS WHERE REQUIRED BY CALIFORNIA ELECTRICAL CODE SECTION 110.26(E)(1) AND TO PROVIDE DRIP PANS OVER ELECTRICAL SERVICE EQUIPMENT, SWITCH GEAR, AND INDUSTRIAL CONTROL ASSEMBLIES WHERE REQUIRED BY CALIFORNIA ELECTRICAL CODE SECTION 110.34(F).

Project Requirements

A COORDINATE INSTALLATION OF PIPING, DUCTWORK, CONDUIT, LIGHTS, CABLE TRAY, STRUCTURE, AND EQUIPMENT TO PREVENT CONFLICTS.

B FINAL PRODUCT SHALL BE A COMPLETE AND FUNCTIONING SYSTEM, AND SHALL CONFORM TO ALL REQUIREMENTS OF APPLICABLE FEDERAL, STATE, AND LOCAL CODES, INCLUDING BUT NOT LIMITED TO THE INTERNATIONAL BUILDING CODE AND INTERNATIONAL MECHANICAL CODE.

C LOCATE EQUIPMENT REQUIRING ACCESS 2'-0" MAXIMUM ABOVE CEILING.

D PENETRATIONS OF RATED ASSEMBLIES SHALL BE FIRE STOPPED. FIRE STOPPING SHALL BE AN APPROVED MATERIAL AS PRESCRIBED IN CSFM STANDARD 43-1 AND SHALL BE U.L. LISTED.

E PROVIDE SLEEVES AND/OR OPENINGS TO RUN PIPES THROUGH FOUNDATIONS, FLOORS, WALLS, AND ROOF.

F MAINTAIN CLEAR ACCESS TO SERVICE EQUIPMENT AND OTHER ACCESSORIES REQUIRING SERVICE, VISUAL INSPECTION OR HAND OPERATION. WHERE INDICATED OR REQUIRED, PROVIDE ACCESS PANELS OF THE TYPE SELECTED TO SUIT MATERIALS IN WHICH INSTALLED.

G REFER TO HVAC SERIES DRAWINGS FOR GAS AND A.C. CONDENSATE DRAIN PIPING.

H PIPE SIZES SHOWN SHALL BE CONTINUED IN THE DIRECTION OF FLOW UNTIL ANOTHER SIZE IS SHOWN.

I FOR DETAILS, EQUIPMENT CONNECTIONS, AND PIPE SIZES NOT SHOWN ON THE SEGMENTS, REFER TO DETAILS, SCHEDULES, AND SPECIFICATIONS.

J INSTALL ALL EQUIPMENT IN ACCORDANCE WITH THE RESPECTIVE MANUFACTURER'S WRITTEN INSTALLATION INSTRUCTIONS, AT A LEVEL OF QUALITY AND WORKMANSHIP CONSISTENT WITH THE SPECIFICATIONS.

K LOCATIONS OF PIPING AND EQUIPMENT AS INDICATED ON THE DRAWING, ARE APPROXIMATE AND SUBJECT TO MINOR ADJUSTMENTS IN THE FIELD. WORK SHALL BE COORDINATED WITH ALL OTHER TRADES TO AVOID INTERFERENCE IN THE FIELD.

L INSTALL EXPOSED PIPING AS HIGH AS PRACTICAL IN ROOMS WITHOUT CEILINGS.

M THE CONTRACTOR'S WORK SCHEDULE SHALL BE SUBMITTED TO AND APPROVED BY THE OWNER.

N PRIOR TO STARTING WORK, SUBMIT SHOP DRAWINGS FOR ALL PLUMBING FIXTURES,

O CONTRACTOR SHALL OBTAIN AND PAY FOR ALL NECESSARY PERMITS AND SHALL ARRANGE FOR ALL INSPECTIONS AS REQUIRED.

P PROVIDE ONE YEAR WARRANTY FOR ALL WORKMANSHIP AND MATERIALS AFTER THE DATE OF FINAL ACCEPTANCE.

PLUMBING FIXTURE SCHEDULE

MARK	ITEM	DESCRIPTION	C.W.	H.W.	WASTE	VENT	REMARKS
CA	AIR COMPRESSOR	AIR COMPRESSOR - VERTICAL, ELECTRIC 3 PHASE, 480V, 5 HP TWO STAGE PISTON, 80 GALLON, 175 PSI, 14 CFM.	-	-	-	-	
FCO-1	FLOOR CLEANOUT	CAST IRON FLOOR CLEANOUT WITH ANCHOR FLANGE, STAINLESS STEEL ACCESS COVER AND PLUG ASSEMBLY WITH PRIMARY GASKET SEAL.	-	-	4"	-	
EWC-1	ELECTRIC WATER COOLER	WALL MOUNTED, BI-LEVEL, 8 GPH CAPACITY WITH BOTTLE FILLER, FILTERED, REFRIGERATED AND FREEZE RESISTANT, STAINLESS STEEL TOP, ADA COMPLIANT.	1/2"	-	1 1/2"	1 1/2"	
EEWS-1	EMERGENCY EYEWASH DRENCH SHOWER	STAINLESS STEEL EYE/FACE WASH AND DRENCH SHOWER SAFETY STATION. 10" STAINLESS STEEL SHOWER HEAD, STAINLESS STEEL STAY-OPEN BALL VALVE, STAINLESS STEEL BOWL AND COVER.	3/4"	3/4"	-	-	
EWH-1	ELECTRIC WATER HEATER	ELECTRIC WATER HEATER, 66 GAL. STORAGE CAPACITY, 8.0 KW, 208V / 3 PHASE, 32 GPH @ 100 DEGREES RISE. MAXIMUM SET POINT IS 110 DEGREES.	3/4"	3/4"	-	-	WATER SOURCE HEAT PUMP
EXP-1	EXPANSION TANK	EXPANSION TANK, IN-LINE DESIGN WITH 3/4" CONNECTION, DRAWN- STEEL TANK, BUTYL DIAPHRAGM, FIELD ADJUSTABLE 40 PSI AIR CHARGE, 4.55 GAL. CAPACITY.	3/4"	-	-	-	
FD-1	FLOOR DRAIN	CAST IRON BODY WITH ANCHOR FLANGE, WEEPHOLES, HEAVY DUTY STAINLESS STEEL STRAINER, AND MEMBRANE CLAMP.	-	-	4"	2"	
HB-1	HOSE BIBB	AUTOMATIC DRAINING WITHIN TAMPER RESISTANT BRASS BOX, WALL CLAMP, AND BACKFLOW PROTECTED.	3/4"	-	-	-	
ICE-1	ICE MACHINE	ICE MAKER METAL BOX, ONE-PIECE RECESSED, ONE TURN SHUT-OFF SUPPLY, SNAP ON FACE PLATE.	1/2"	-	-	-	
LAV-1	LAVATORY (ADA)	WALL MOUNTED, VITREOUS CHINA, FRONT OVERFLOW, PROVIDE P-TRAP, SUPPLIES, GRID STRAINER AND SEAMLESS PIPING INSULATORS. PROVIDE & INSTALL SENSOR ACTIVATED BATTERY OPERATED FAUCET, 0.5 GPM, ADA COMPLIANT.	1/2"	1/2"	1 1/2"	1 1/2"	MOUNT 34" TO RIM.
MS-1	MOP SINK	TERRAZZO FLOOR MOUNTED MOP RECEPTOR, 24" X 24" X 12", INSTALL WITH SUPPLIES, HOSE CLAMP, MOP HANGER, CHROME STRAINER AND FAUCET WITH INTEGRAL VACUUM BREAKER, DOUBLE STOPS AND BUCKET HOOK WITH WALL BRACE, 2.2 GPM.	1/2"	1/2"	1 1/2"	1 1/2"	
MV-1	MIXING VALVE	THERMOSTATC MIXING VALVE, FURNISHED WITH HEAVY DUTY STAINLESS STEEL MOUNTING BRACKET, 1/2" INLET AND OUTLET SUPPLY, SET TO SUPPLY 85 DEGREES TEPID WATER.	1 1/4" TEPID WATER	-	-	-	
SH-1	SHOWER VALVE (ADA)	CHROME PLATED METAL CONSTRUCTION, LEVER STYLE HANDLE WITH ADJUSTABLE TEMPERATURE STOPS, BALANCING MIXING VALVE, SHOWER / HAND HELD SHOWER TRIM, GRAB BARS AND 2" HEAVY DUTY BRASS BODY DRAIN. 2.5 GPM, ADA COMPLIANT.	1/2"	1/2"	1 1/2"	1 1/2"	
SK-1	BREAKROOM SINK (ADA)	DOUBLE COMPARTMENT STAINLESS STEEL SINK, 18 GAUGE, TYPE 304, FAUCET LEDGE WITH 3 HOLES ON 4" CENTERS, INSTALL WITH ONE HANDLE LOW ARC FAUCET, SUPPLIES, P-TRAP, BASKET STRAINER & PIPING INSULATORS, 2.0 GPM,ADA COMPLIANT.	1/2"	1/2"	1 1/2"	1 1/2"	SINGLE LEVER STYLE FAUCET
SK-2	WORK BAY SINK (ADA)	SINGLE COMPARTMENT STAND ALONE STAINLESS STEEL SINK, 18 GAUGE, TYPE 304, FAUCET LEDGE WITH 3 HOLES ON 4" CENTERS. INSTALL WITH ONE HANDLE LOW ARC FAUCET, SUPPLIES, P-TRAP, BASKET STRAINER & PIPING INSULATORS, 2.0 GPM. ADA COMPLIANT.	1/2"	1/2"	1 1/2"	1 1/2"	SINGLE LEVER STYLE FAUCET
WC-1	WATER CLOSET (ADA)	FLOOR MOUNTED, VITREOUS CHINA, ELONGATED BOWL, GRAVITY FED. PROVIDE WITH SENSOR ACTIVATED BATTERY POWERED FLUSH VALVE, SUPPLIES AND OPEN SEAT, 1.28 GPF, ADA COMPLIANT.	1"	-	4"	2"	MOUNT RIM HEIGHT 17"AFF.
WH-1	WALL HYDRANT	CAST BRASS BOXED WALL MOUNTED HYDRANT, NON FREEZE, AUTOMATIC DRAINING, DUAL CHECK BACK FLOW PROTECTED AND SUPPLIED WITH OPERATING KEY.	3/4"	-	-	-	
WHA-1	WATER HAMMER ARRESTOR	PRE-CHARGED, PERMANENT SEALED AIR CHAMBER. NPT SOLID BRASS ADAPTER.	SEE PLANS	-	-	-	

MAINTENANCE FACILITY PLUMBING SHEET INDEX

MF-P001 COVER SHEET
MF-P105 FLOOR PLANS
MF-P700 DETAILS

Susan Hatchell
Landscape Architecture, PLLC
711 W. North Street, Raleigh, NC 27603
p: 919-838-9600 f: 919-838-9700

Wooten
120 North Boylan Avenue • Raleigh, NC 27603-1423
(919) 828-0531 • thewootencompany.com
License Number : F-0115

COVER SHEET

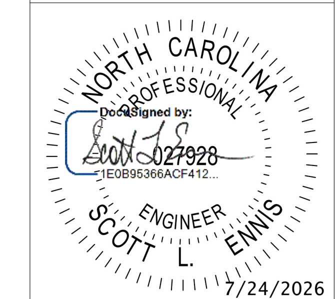

LAKE MYRA COUNTY PARK
Wake County, NC

REVISIONS

Date: 07/27/26

MF-P001

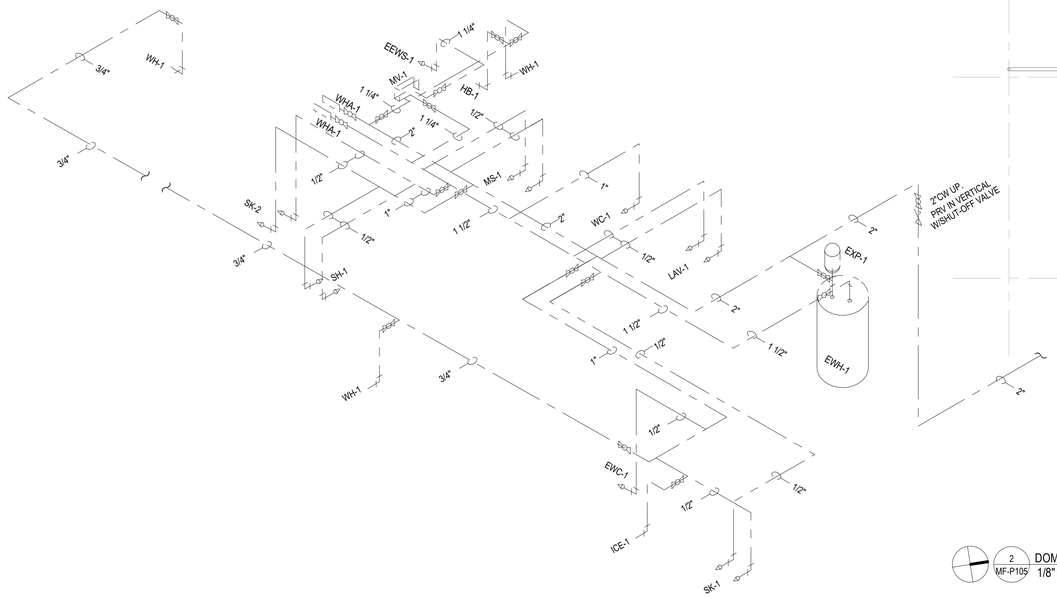

4 MF-P105 MF - WATER SUPPLY RISER DIAGRAM
NOT TO SCALE

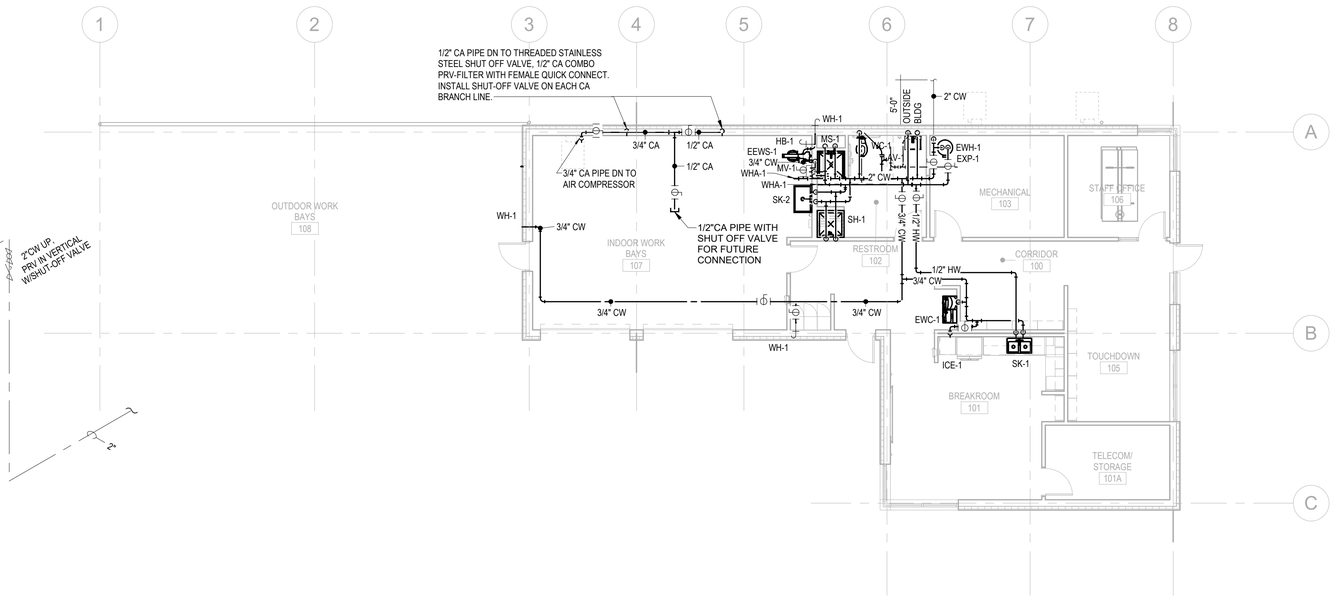

2 MF-P105 DOMESTIC WATER PLAN
1/8" = 1'-0"

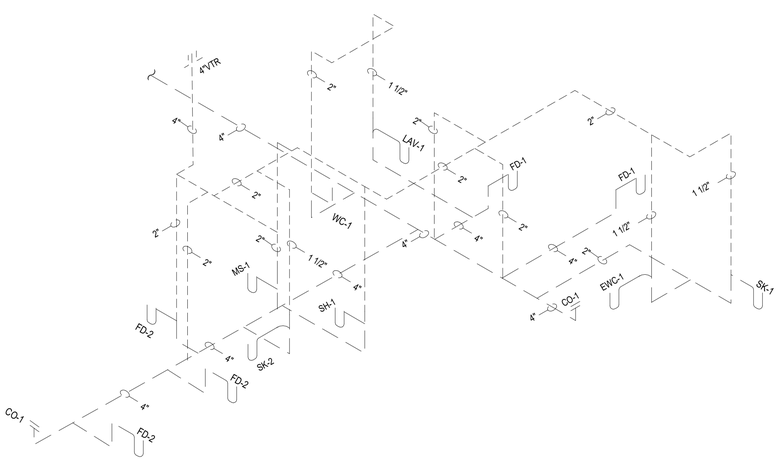

3 MF-P105 MF - WASTE AND VENT RISER DIAGRAM
NOT TO SCALE

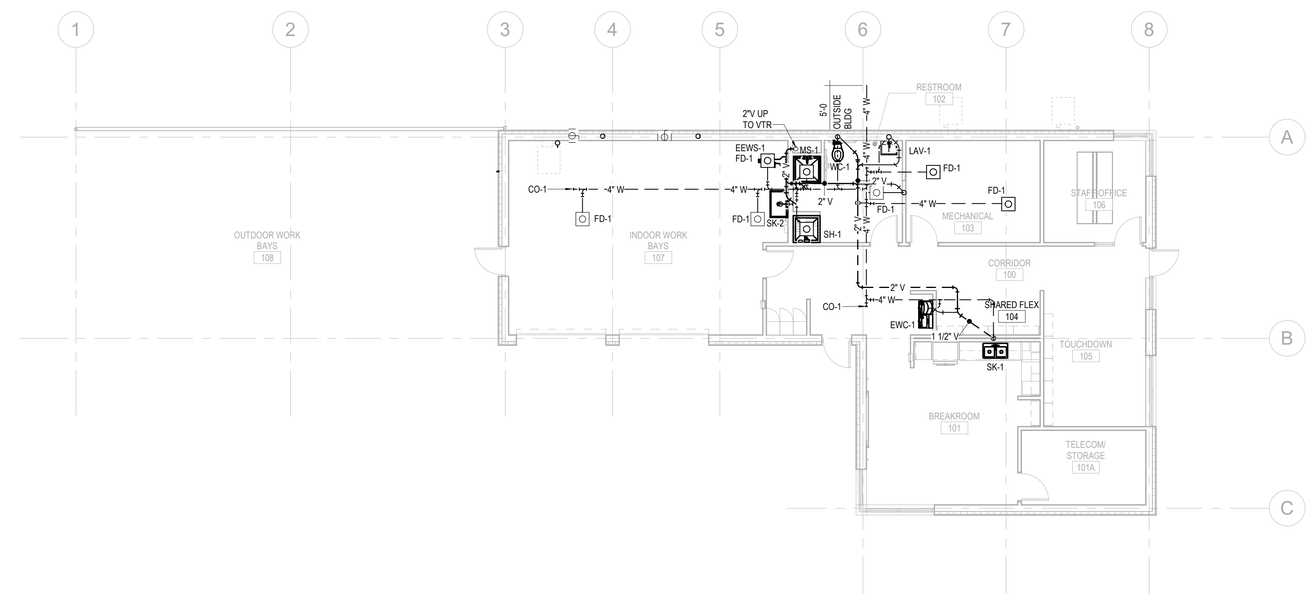

1 MF-P105 DWV PLAN
1/8" = 1'-0"

Susan Hatchell
Landscape Architecture, PLLC
711 W. North Street, Raleigh, NC 27603
p: 919-838-9600 f: 919-838-9700

Wooten
129 North Boylan Avenue • Raleigh, NC 27603-1423
(919) 828-0531 • thewootencompany.com
License Number: F-0115

FLOOR PLANS

NORTH CAROLINA PROFESSIONAL ENGINEER SEAL 027928 SCOTT L. ENNIS
No Designed by:
LICENSE#:PEACF412
7/24/2026

LAKE MYRA COUNTY PARK
Wake County, NC

REVISIONS

Date: 07/27/26

MF-P105

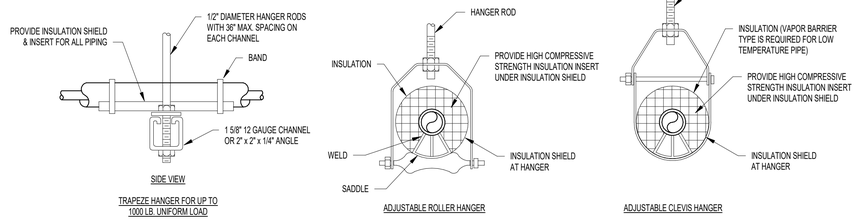

6 MF-P700 PIPE HANGER DETAIL - A
NOT TO SCALE

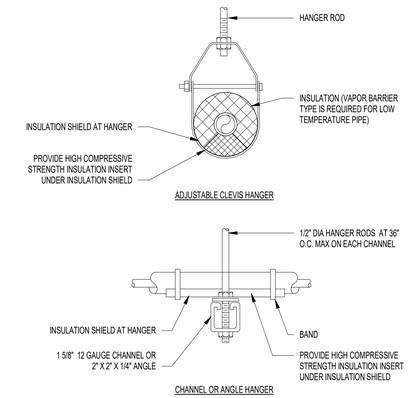

5 MF-P700 PIPE HANGER DETAIL
NOT TO SCALE

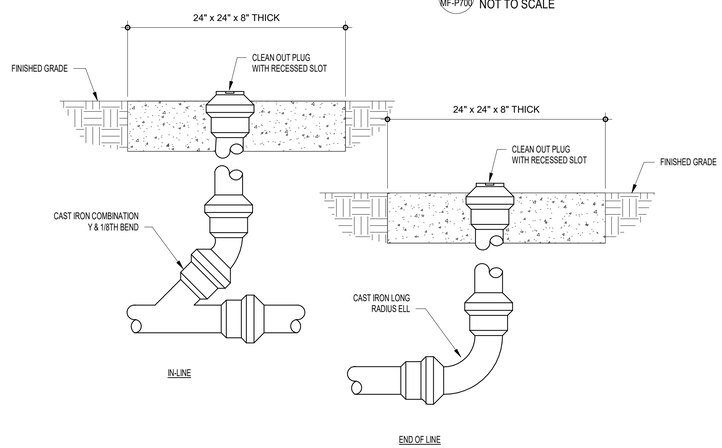

4 MF-P700 EXTERIOR CLEANOUT DETAIL
NOT TO SCALE

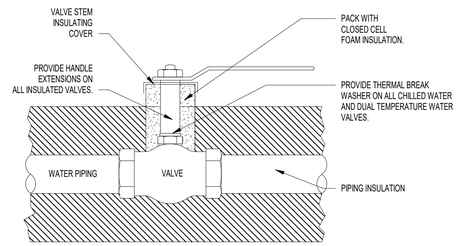

3 MF-P700 TYPICAL BALL VALVE INSTALLATION DETAIL
NOT TO SCALE

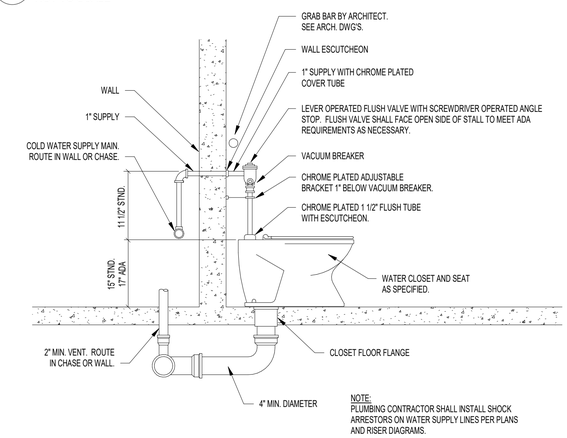

2 MF-P700 FLOOR MOUNTED WATER CLOSET DETAIL
NOT TO SCALE

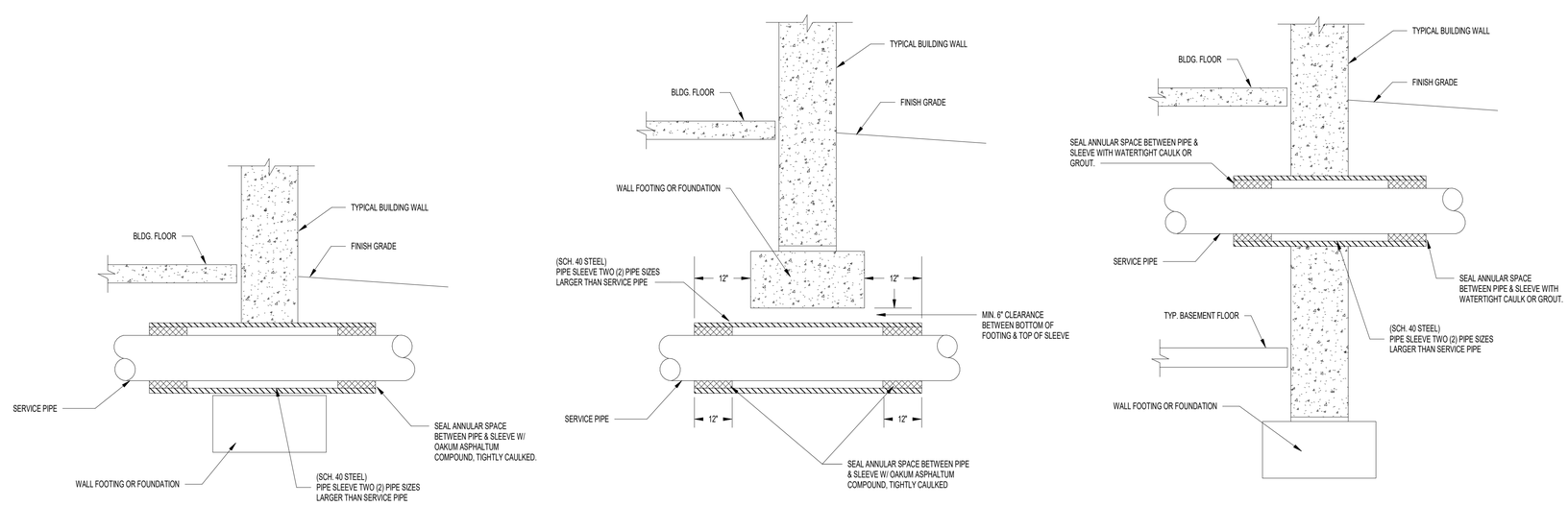

1 MF-P700 TYPICAL PIPE SLEEVE DETAIL - MAINTENANCE FACILITY
NOT TO SCALE

Susan Hatchell
Landscape Architecture, PLLC
711 W. North Street, Raleigh, NC 27603
p: 919-838-9600 f: 919-838-9700

Wooten
129 North Boylan Avenue • Raleigh, NC 27603-1423
(919) 828-0531 • thewootencompany.com
License Number : F-0115

DETAILS

NORTH CAROLINA PROFESSIONAL ENGINEER SEAL
DocuSigned by:
SCOTT L. ENNIS
027928
1B2B9536ACF412...
7/24/2026

LAKE MYRA COUNTY PARK
Wake County, NC

REVISIONS

Date: 07/27/26

MF-P700

General Plan Symbols

Symbol	Description
△	Plan Revision Number
⊖	Detail Number on Sheet / Sheet Number Where Detail is Placed
⟨1⟩	Keynote Symbol
≀	Continuation Symbol
⊗	Point Where New Connects To Existing
ROOM 1	Room Name / Number
hatched	Area Being Demolished
cross-hatched	Area Not In Contract

Abbreviations

Ø	ROUND	LVR	LOUVER
ABV	ABOVE	LWT	LEAVING WATER TEMPERATURE
AC	AIR CONDITIONING	M/A	MIXED AIR
AD	AREA DRAIN	MAX	MAXIMUM
ADD	ADDENDUM	MBH	ONE THOUSAND BTU PER HOUR
AFF	ABOVE FINISHED FLOOR	MCF	ONE THOUSAND CUBIC FEET
AFUE	ANNUAL FUEL UTILIZATION EFFICIENCY	MD	MOTORIZED DAMPER
ALT	ALTERNATE	MECH	MECHANICAL
AP	ACCESS PANEL	MFR	MANUFACTURER
ARCH	ARCHITECT/ARCHITECTURAL	MIN	MINIMUM
BFF	BELOW FINISHED FLOOR	MISC	MISCELLANEOUS
BLW	BELOW	MTR	MOTOR
BTU	BRITISH THERMAL UNITS	MU/A	MAKE-UP/AIR
BTUH	BRITISH THERMAL UNITS PER HOUR	NC	NOISE CRITERIA
CAP	CAPACITY	NC	NORMALLY CLOSED
CB	CATCH BASIN	NIC	NOT IN CONTRACT
CFM	CUBIC FEET PER MINUTE	NO	NUMBER
CLG	CEILING	NO	NORMALLY OPEN
CO	CLEAN OUT	NTS	NOT TO SCALE
CW	COLD WATER	O	OXYGEN
D	DEGREE	O/A	OUTSIDE AIR
DB	DRY BULB	ORD	OVERFLOW ROOF DRAIN
DIA	DIAMETER	PD	PRESSURE DROP
DN	DOWN	PIV	POST INDICATOR VALVE
DW	DISTILLED WATER	PLBG	PLUMBING
EA	EACH	PRESS	PRESSURE
EAT	ENTERING AIR TEMPERATURE	PRV	PRESSURE REDUCING VALVE
ELEC	ELECTRICAL	PSI	POUNDS PER SQUARE INCH
EQUIP	EQUIPMENT	PSIG	POUNDS PER SQUARE INCH GAUGE
EWC	ELECTRIC WATER COOLER	PWR	POWER
EWT	ENTERING WATER TEMPERATURE	R	DUCT RISER
E/A	EXHAUST AIR	R/A	RETURN AIR
EXIST	EXISTING	RCP	RADIANT CEILING PANEL
F	DEGREES FAHRENHEIT	RD	ROOF DRAIN
FCO	FLOOR CLEAN OUT	REC	RECESSED
FD	FLOOR DRAIN	RED	REDUCER
FDC	FIRE DEPARTMENT CONNECTION	RH	RELATIVE HUMIDITY
FL	FLOOR	RL/A	RELIEF AIR
FO	FUEL OIL	RM	ROOM
FOV	FUEL OIL VENT	RPM	REVOLUTIONS PER MINUTE
FOR	FUEL OIL RETURN	RW	RAIN WATER
FOS	FUEL OIL SUPPLY	SF	SQUARE FOOT
FPM	FEET PER MINUTE	S/A	SUPPLY AIR
FS	FLOOR SINK	SAN	SANITARY
FT	FOOT/FEET	SF	SQUARE FOOT
FTR	FIN TUBE RADIATION	SD	SMOKE DAMPER
GAL	GALLON	SM	SURFACE MOUNT
GF	GAS-FIRED	SP	STANDPIPE
GC	GENERAL CONTRACTOR	SP	STATIC PRESSURE
GPM	GALLONS PER MINUTE	STM	STEAM
GW	GREASE WASTE	T	THERMOSTAT
HB	HOSE BIB	TD	TEMPERATURE DROP
HP	HORSE POWER	TDR	TRENCH DRAIN
HTG	HEATING	TEMP	TEMPERATURE
HTR	HEATER	TYP	TYPICAL
HW	HOT WATER	UG	UNDERGROUND
HYD	HYDRANT	VAC	VACUUM
ID	INDIRECT	V	VENT
IN	INCH	VAV	VARIABLE AIR VOLUME
INV	INVERT	VENT	VENTILATION
LB	POUND	VTR	VENT THROUGH ROOF
LB/HR	POUNDS PER HOUR	W	WASTE
LAT	LEAVING AIR TEMPERATURE	WB	WET BULB
LP	LOW PRESSURE	WCO	WALL CLEAN OUT
LPG	LIQUEFIED PETROLEUM GAS	WH	WALL HYDRANT

Equipment Abbreviations

AC	AIR CONDITIONING UNIT	ET	EXPANSION TANK
ACCU	AIR COOLING CONDENSING UNIT	EWH	ELECTRIC WATER HEATER
AHU	AIR HANDLING UNIT	FCU	FAN COIL UNIT
AS	AIR SEPARATOR	FP	FIRE PUMP
B	BOILER	GI	GREASE INTERCEPTOR
CH	CHILLER	GRV	GRAVITY ROOF VENTILATOR
CT	COOLING TOWER	HWP	HEATING WATER PUMP
CUH	CABINET UNIT HEATER	HRU	HEAT RECOVERY UNIT
CHWP	CHILLED WATER PUMP	PRV	POWER ROOF VENTILATOR
DBP	DOMESTIC WATER BOOSTER PUMP	RE	RETURN/EXHAUST FAN
DC	DUCT MOUNTED COIL	RTU	ROOFTOP UNIT
DCP	DOMESTIC WATER CIRCULATING PUMP	SP	SUMP PUMP
EF	EXHAUST FAN	UH	UNIT HEATER
EDC	ELECTRIC DUCT COIL	WH	WATER HEATER

* NOTE *
ALL OF GENERAL NOTES ON THIS SHEET ARE TO BE APPLIED TO ALL OTHER DRAWINGS IN THIS SET.THE SYMBOLS AND ABBREVIATIONS SHOWN ON THIS SHEET MAY OR MAY NOT BE USED IN THIS SET OF DRAWINGS.

HVAC Symbols

Symbol	Description
24"x12"	Sq. Duct Size (Width x Height)
24"/12"	Oval Duct Size (Width / Height)
18"Ø	Round Duct Size (Diameter)
(E)	Existing Duct To Remain
	Duct To Be Demolished
S/A	Supply Air
V/A	Ventilation Air
O/A	Outdoor Air
R/A	Return Air
T/A	Transfer Air
L/A	Building Relief Air
E/A	General Exhaust Air
KED	Kitchen Exhaust Duct
LH	Laboratory Hood
ETS	Env. Tobacco Smoke
FLUE	Flue Gas Vent
C/A	Combustion Air
	Rect. Supply Duct Rise / Drop
	Round Supply Duct Rise / Drop
	Rect. Return Duct Rise / Drop
	Round Return Duct Rise / Drop
	Rect. Exhaust Duct Rise / Drop
	Round Exhaust Duct Rise / Drop

Grille, Register, Diffusers

Square Ceiling Diffuser — Q 500 / 10"Ø/24x24 / 29 H6/9/17: Type (See Schedule); Airflow; Neck Size / Module Size; Catalog Throw Performance; Throw Pattern; Max NC Rating

Round Ceiling Diffuser — CD11 100 / 6"Ø / TYP. X 4: Airflow; Neck Size; Type Count for Space

Sidewall Supply Grille — F 500 / 18"x10" / AFF:9'-0": Airflow; Nominal Duct Size; Mounting Elevation (Centerline)

Supply — G 200: Airflow; Neck Size/ Slot(s)/ Active Length

Sidewall Return Grille — T 800 / 16"x0" / AFF:9'-0": Airflow; Nominal Duct Size; Mounting Elevation (Centerline)

Ceiling Return — S 500 / 12"x0"/24x24 / 25: Airflow; Neck Size / Module Size; Max NC Rating

Mechanical Equipment

Tag	Description
RTU-1	Unit Identity
10.0 ton	Nominal Cooling Capacity
RTU-1 180000 Btu/h	Heating Capacity
180 CFH	Gas Supply Input Rate
ET-1 379 lb	Operating Weight
EF-XX 500 CFM	Design Airflow Rate
VAV 1-2 3.7 GPM	Design Water Flow
AC-1 AFF:7'-0"	Bottom of Equipment Height
(E)AHU-2	Existing to Remain Equipment
(R)AHU-3	Existing Relocated Equipment
	Equipment By Others (Refer To Other Disciplines)

Damper Types

Symbol	Description
B	Manual Damper
M	Motorized Damper
	Backdraft Damper
S	Smoke Damper
●	Fire Damper
● S	Comb. Fire/ Smoke Damper

Mechanical Piping Symbols

Symbol	Description
2"	Nominal Pipe Size
	Above Ground Piping
	Below Ground Piping
1/8" / 12" SLOPE	Pipe Slope (When Applicable)
(E)	Existing Pipe To Remain
	Pipe To Be Demolished
CHWR	Chilled-Water Return
CHWS	Chilled-Water Supply
CD	Condensate Drain
CWR	Condenser-Water Return
CWS	Condenser-Water Supply
GWR	Geothermal-Water Return
GWS	Geothermal-Water Supply
HWR	Hot-Water Return
HWS	Hot-Water Supply
G	Natural Gas
LP	Liquid Propane
RL	Refrigerant Liquid
RS	Refrigerant Gas
RD	Refrigerant Discharge
STM	Steam Supply
CDR	Steam Condensate Return
	Pipe Rise / Drop

Valve Types

Symbol	Description
2" SHUTOFF	Ball Valve
2" BAL	Balancing Valve
2" BFV	Butterfly Valve
2" CHECK	Check Valve
2" CHECK	Alternate Check Valve
3" CIRC	Circuit Setter
2" GATE	Gate Valve
2" GLOBE	Globe Valve
2" LOCK	Locked Shield Valve
2" PRV	Pressure Reducing Valve
2" QUICK	Quick Opening Valve
2" STRAIN	Fluid Strainer
2" M-CNTRL	Elec. Control Valve
4" 3-WAY CNTRL	3-Way Elec. Valve
1" GAS-CNTRL	Emergency Gas Shutoff
1" PLUG	Plug Valve
1" GAS COCK	Gas Shutoff Cock
1" REG	Gas Regulator

Mechanical Devices

Symbol	Description
AHU-1	Unit Identity
TS	Temperature Sensor
TH	Temp/ Humidity Sensor
TC	Temp/ CO2 Sensor
T	Thermostat
H	Humidistat
HS	Humidity Sensor
CO2	Carbon Dioxide Detector
CO	Carbon Monoxide Detector
H2	Hydrogen Gas Detector
HZG	Hazardous Gas Detector
NO2	Nitrogen Dioxide Detector
O2	Oxygen Gas Detector

Project Requirements

A COORDINATE INSTALLATION OF PIPING, DUCTWORK, CONDUIT, LIGHTS, CABLE TRAY, STRUCTURE, AND EQUIPMENT TO PREVENT CONFLICTS.
B FINAL PRODUCT SHALL BE A COMPLETE AND FUNCTIONING SYSTEM, AND SHALL CONFORM TO ALL REQUIREMENTS OF APPLICABLE FEDERAL, STATE, AND LOCAL CODES, INCLUDING BUT NOT LIMITED TO THE INTERNATIONAL BUILDING CODE AND INTERNATIONAL MECHANICAL CODE.
C LOCATE EQUIPMENT REQUIRING ACCESS 2'-0" MAXIMUM ABOVE CEILING.
D PENETRATIONS OF RATED ASSEMBLIES SHALL BE FIRE STOPPED. FIRE STOPPING SHALL BE AN APPROVED MATERIAL AS PRESCRIBED IN CSFM STANDARD 43-1 AND SHALL BE U.L. LISTED.
E PROVIDE SLEEVES AND/OR OPENINGS TO RUN PIPES THROUGH FOUNDATIONS, FLOORS, WALLS, AND ROOF.
F MAINTAIN CLEAR ACCESS TO SERVICE EQUIPMENT AND OTHER ACCESSORIES REQUIRING SERVICE, VISUAL INSPECTION OR HAND OPERATION. WHERE INDICATED OR REQUIRED, PROVIDE ACCESS PANELS OF THE TYPE SELECTED TO SUIT MATERIALS IN WHICH INSTALLED.
G REFER TO HVAC SERIES DRAWINGS FOR GAS AND A.C. CONDENSATE DRAIN PIPING.
H PIPE SIZES SHOWN SHALL BE CONTINUED IN THE DIRECTION OF FLOW UNTIL ANOTHER SIZE IS SHOWN.
I FOR DETAILS, EQUIPMENT CONNECTIONS, AND PIPE SIZES NOT SHOWN ON THE SEGMENTS, REFER TO DETAILS, SCHEDULES, AND SPECIFICATIONS.
J INSTALL ALL EQUIPMENT IN ACCORDANCE WITH THE RESPECTIVE MANUFACTURER'S WRITTEN INSTALLATION INSTRUCTIONS, AT A LEVEL OF QUALITY AND WORKMANSHIP CONSISTENT WITH THE SPECIFICATIONS.
K LOCATIONS OF PIPING AND EQUIPMENT AS INDICATED ON THE DRAWING, ARE APPROXIMATE AND SUBJECT TO MINOR ADJUSTMENTS IN THE FIELD. WORK SHALL BE COORDINATED WITH ALL OTHER TRADES TO AVOID INTERFERENCE IN THE FIELD.
L INSTALL EXPOSED PIPING AS HIGH AS PRACTICAL IN ROOMS WITHOUT CEILINGS.
M THE CONTRACTOR'S WORK SCHEDULE SHALL BE SUBMITTED TO AND APPROVED BY THE OWNER.
N PRIOR TO STARTING WORK, SUBMIT SHOP DRAWINGS FOR ALL PLUMBING FIXTURES,
O CONTRACTOR SHALL OBTAIN AND PAY FOR ALL NECESSARY PERMITS AND SHALL ARRANGE FOR ALL INSPECTIONS AS REQUIRED.
P PROVIDE ONE YEAR WARRANTY FOR ALL WORKMANSHIP AND MATERIALS AFTER THE DATE OF FINAL ACCEPTANCE.

MECHANICAL GENERAL NOTES:

1. THE CONTRACTOR SHALL COORDINATE WORK WITH THAT OF THE OTHER TRADES PRIOR TO INSTALLATION OF ANY DUCTWORK AND EQUIPMENT.

2. THE CONTRACTOR SHALL MAKE A COMPLETE REVIEW OF THE MECHANICAL PLANS, SCHEDULES, AND DETAILS PRIOR TO INSTALLATION OF THE MECHANICAL SYSTEMS AND REVIEW ANY CONFLICTS THAT ARE NOTED WITH THE ENGINEER.

3. THE MECHANICAL CONTRACTOR SHALL ENSURE THAT ITEMS TO BE FURNISHED UNDER THE CONTRACT WILL FIT THE SPACE AVAILABLE. THE CONTRACTOR SHALL MAKE NECESSARY FIELD MEASUREMENTS TO ASCERTAIN SPACE REQUIREMENTS, INCLUDING THOSE FOR CONNECTIONS, AND SHALL FURNISH AND INSTALL SUCH SIZES AND SHAPES OF EQUIPMENT AS NECESSARY.

4. ALL EQUIPMENT SHALL BE LOCATED AND INSTALLED TO PROVIDE MAXIMUM SPACE FOR PROPER MAINTENANCE AND SERVICE.

5. ALL POWER WIRING AND ASSOCIATED CONDUIT SHALL BE PROVIDED TO HVAC EQUIPMENT BY THE ELECTRICAL CONTRACTOR. THE HVAC CONTRACTOR SHALL FURNISH ALL MOTOR STARTERS, DISCONNECT SWITCHES, AND COMBINATION STARTERS FOR HVAC EQUIPMENT AND TURN THEM OVER TO THE ELECTRICAL CONTRACTOR FOR INSTALLATION. ALL FINAL POWER WIRING CONNECTIONS TO HVAC EQUIPMENT SHALL BE MADE BY THE HVAC CONTRACTOR FROM SLACK WIRE LEFT BY THE ELECTRICAL CONTRACTOR. REFER TO STANDARD ELECTRICAL CONNECTION DETAIL FOR DIVISION RESPONSIBILITY REGARDING ELECTRICAL REQUIREMENTS. MECHANICAL CONTRACTOR SHALL PROVIDE ALL CONTROL WIRING, IN CONDUIT, REQUIRED TO SATISFACTORILY CONTROL ALL EQUIPMENT INCLUDED IN THIS SECTION. FURNISH AND WIRE ALL CONTROL DEVICES SUCH AS THERMOSTATS, SWITCHES, RELAYS AND ANY OTHER DEVICES NECESSARY TO CONTROL THE EQUIPMENT FURNISHED IN THIS SECTION UNLESS NOTED OTHERWISE.

6. THE MECHANICAL CONTRACTOR SHALL PROVIDE AND INSTALL HIS OWN SUPPORT DEVICES. ALL LOCATIONS SHALL BE COORDINATED WITH THE GENERAL CONTRACTOR AND OTHER PRIME CONTRACTORS PRIOR TO INSTALLATION.

7. THE MECHANICAL CONTRACTOR SHALL REFER TO THE ARCHITECTURAL PLANS FOR FLOOR PLAN DIMENSIONS. DO NOT SCALE THESE DRAWINGS.

8. THE MECHANICAL CONTRACTOR SHALL BE RESPONSIBLE FOR ALL PENETRATIONS (PERTAINING TO HVAC WORK) THROUGH THE ROOF. THE MECHANICAL CONTRACTOR SHALL COORDINATE WITH THE ROOFING CONTRACTOR FOR WATER PROOFING AROUND THESE OPENINGS. ROOF CURBS FOR HVAC EQUIPMENT SHALL BE FURNISHED BY THE MECHANICAL CONTRACTOR AND INSTALLED BY THE ROOFING CONTRACTOR.
9. THE MECHANICAL CONTRACTOR SHALL COORDINATE SIZE AND LOCATION OF ALL PENETRATIONS THROUGH THE ROOF WITH THE GENERAL CONTRACTOR AND ROOFING SUB-CONTRACTOR.

10. ALL FIRE WALL DUCT PENETRATIONS SHALL BE FIRE SEALED IN ACCORDANCE WITH THE LATEST UL STANDARDS.

11. PROVIDE SHEET METAL COLLARS AT ALL LOCATIONS WHERE CUTS PENETRATE WALLS. COLLARS SHALL BE 14 GAUGE MINIMUM OR EQUIVALENT TO THE DUCTWORK IF DUCTWORK IS OF A HEAVIER GAUGE METAL.

12. INSTALL BALANCING DAMPERS IN ALL DUCTS SO AS THE LOCATION IS VISIBLE FROM THE FLOOR.
13. ALL ELBOWS IN DUCTWORK SHALL BE RADIUS ELBOWS, UNLESS OTHERWISE NOTED.

14. INSTALL TEMPERATURE SENSORS AND THERMOSTATS 48" ABOVE FINISHED FLOOR. COORDINATE WITH INSTALLATION OF LIGHT SWITCHES.

15. ALL DUCTWORK, PIPING, AND EQUIPMENT LAYOUTS AND LOCATIONS SHOWN ARE DIAGRAMMATIC. THE CONTRACTOR SHALL BECOME FAMILIAR WITH THE PROJECT AND COORDINATE THE DUCT LAYOUT WITH ALL CONTRACTORS PRIOR TO INSTALLATION. THIS CONTRACTOR SHALL PROVIDE, AT NO ADDITIONAL COST TO THE OWNER, ALL DUCT OFFSETS REQUIRED FOR THE SYSTEMS TO FIT THE SPACE PROVIDED WHETHER OR NOT THOSE OFFSETS ARE INDICATED ON THE PLANS.

16. ALL DUCTWORK AND EQUIPMENT SHALL BE SUPPORTED FROM THE BUILDING SUPPORT STRUCTURE AND NOT STRUCTURAL BRIDGING OR THE ROOF DECK. THE MECHANICAL CONTRACTOR SHALL COORDINATE THE ROUGH-IN OF DUCTWORK WITH THE GENERAL CONTRACTOR. ALL DUCT PENETRATIONS SHALL BE PROVIDED BY THE MECHANICAL CONTRACTOR.

17. ALL HYDRONIC PIPING SHALL BE PERMANENTLY IDENTIFIED BY THEIR CONTENT, FUNCTION, AND DIRECTION OF FLOW. ALL IDENTIFICATION MARKERS SHALL BE PERMANENTLY STENCILED ON THE PIPING IN A LEGIBLE MANNER AT NO GREATER DISTANCE THAN 10'-0" ON CENTER. ALL PIPING IN THE MECHANICAL ROOMS AND FINISHED AREAS ARE TO BE PAINTED AS FOLLOWS: CHILLED WATER-BLUE, HOT HEATING WATER- RED, DHW MAKEUP- GREEN.

18. A MANUAL AIR VENT SHALL BE INSTALLED AT EVERY HIGH POINT OF THE ENTIRE HYDRONIC PIPING SYSTEM.

19. DO NOT INSTALL HYDRONIC PIPING OR DUCTWORK OVER AND ELECTRICAL SWITCHGEAR OR PANEL BOARDS.

20. THE MECHANICAL CONTRACTOR SHALL PROVIDE ALL ACCESS DOORS AS REQUIRED FOR CODE COMPLIANCE AND TO ACCESS ANY INSTALLATION OF HIS WORK THAT WILL REQUIRE FUTURE MAINTENANCE. THESE DOORS SHALL BE 20"X20". THE DRYWALL CONTRACTOR WILL PROVIDE THE REQUIRED FRAMED OPENINGS AND INSTALL THE ACCESS DOORS. DOORS SHALL MATCH CEILING RATINGS.

21. FLEXIBLE PIPE CONNECTIONS SHALL BE PROVIDED AT ALL HYDRONIC PIPING CONNECTIONS AT CHILLERS.

22. ALL BELT DRIVEN EQUIPMENT SHALL BE PROVIDED WITH A NEW BELT AT FINAL COMPLETION AND A NEW SPARE BELT SHALL BE TURNED OVER TO MAINTENANCE STAFF.

23. PIPING SHALL BE COLOR CODED AS FOLLOWS WITH FLOW ARROWS AND LABELS AT 10 FOOT INTERVALS AND AT ALL TURNS AND EACH FLOOR AND WALL PENETRATIONS: SEE SPECIFICATIONS FOR COLORS.

24. ALL DETAILS ARE APPLICABLE TO THE INSTALLATION OF THE MECHANICAL SYSTEMS ON THIS PROJECT.

25. ALL EXPOSED DOUBLE WALL ROUND DUCTWORK SHALL BE PROVIDED WITH "PAINT GRIP" FINISH. DUCTWORK TO BE PAINTED BY GENERAL CONTRACTOR AS SPECIFIED BY ARCHITECT..

MAINTENANCE FACILITY MECHANICAL SHEET INDEX

MF-M001	COVER SHEET
MF-M101	FLOOR PLAN
MF-M601	DETAILS & SCHEDULES

ENERGY CODE COMPLIANCE STATEMENT MAINTENANCE FACILITY

MECHANICAL SYSTEM, SERVICE SYSTEM, AND EQUIPMENT METHOD OF COMPLIANCE

PRESCRIPTIVE ☒ ENERGY COST BUDGET ☐

THERMAL ZONE: 4A

EXTERIOR DESIGN CONDITIONS:

WINTER DRY BULB: 19.7°F
SUMMER DRY BULB: 95.0°F

INTERIOR DESIGN CONDITIONS:

WINTER DRY BULB: 68°F
SUMMER DRY BULB: 75°F
RELATIVE HUMIDITY: 50%

BUILDING HEATING LOAD: 15.84 MBH

BUILDING COOLING LOAD: 2.34 TONS

MECHANICAL SPACING CONDITIONS SYSTEM:
UNITARY - COOLING AND HEATING PROVIDED BY SPLIT SYSTEM HEAT PUMP UNITS. FREEZE PROTECTION HEATING PROVIDED BY ELECTRIC UNIT HEATER.
BOILER - N/A
CHILLER - N/A

EQUIPMENT EFFICIENCIES:
SEE SCHEDULES

EQUIPMENT SCHEDULES WITH MOTORS:
SEE SCHEDULES

DESIGNER STATEMENT:
TO THE BEST OF MY KNOWLEDGE AND BELIEF, THE DESIGN OF THIS BUILDING COMPLIES WITH THE MECHANICAL SYSTEMS AND EQUIPMENT REQUIREMENTS OF THE 2018 NORTH CAROLINA MECHANICAL CODE.
SCOTT L. ENNIS, P.E.

AN ONSITE SYSTEM INSTALLATION COMPLIANCE REVIEW ALL BE CONDUCTED BY A DESIGN PROFESSIONAL PRIOR TO FINAL INSPECTION AND ISSUANCE OF CERTIFICATION OR OCCUPANCY. THE MECHANICAL CONTRACTOR SHALL MAKE APPROPRIATE PERSONNEL AVAILABLE DURING DESIGN PROFESSIONAL'S ONSITE INSPECTION TO ASSIST WITH REVIEW AND ADDITIONAL EQUIPMENT AND CONTROLS TESTING. CONTRACTOR SHALL SCHEDULE ONSITE INSPECTION WITH DESIGN PROFESSIONAL A MINIMUM ONE WEEK PRIOR TO VISIT. AT THE TIME OF THE VISIT THE MECHANICAL CONTRACTOR SHALL PROVIDE THE FOLLOWING FOR REVIEW BY THE LOCAL AHJ AND DESIGN PROFESSIONAL:

- A COMPLETED TEST AND BALANCE REPORT
- A COPY OF ALL OPERATION AND MAINTENANCE MANUALS
- DOCUMENTATION THAT EQUIPMENT INSTALLER HAS FOLLOWED THE MANUFACTURER'S RECOMMENDATIONS FOR STARTUP AND TESTING OF ALL EQUIPMENT.

Susan Hatchell Landscape Architecture, PLLC
711 W. North Street, Raleigh, NC 27603
p: 919-838-9600 f: 919-838-9700

Wooten
120 North Boylan Avenue • Raleigh, NC 27603-1423
(919) 828-0531 • thewootencompany.com
License Number : F-0115

COVER SHEET

NORTH CAROLINA PROFESSIONAL ENGINEER SCOTT L. ENNIS 027928
DocuSigned by: 1E0B95366ACF412...
7/24/2026

LAKE MYRA COUNTY PARK
Wake County, NC

REVISIONS

Date: 07/27/26

MF-M001

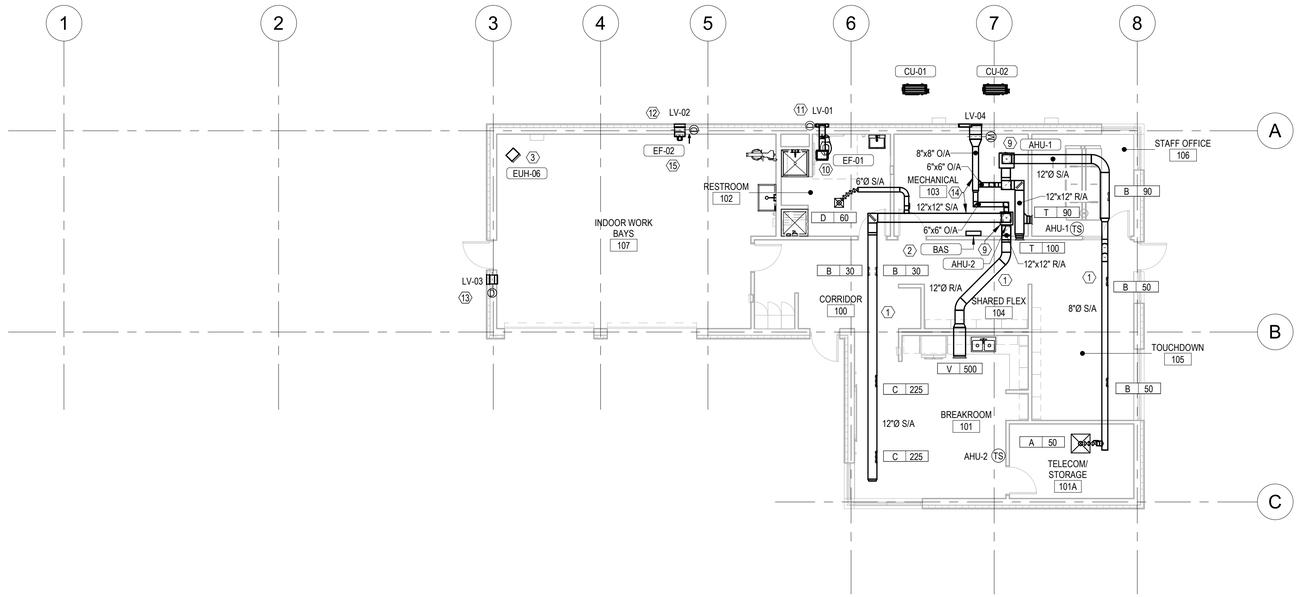

3 MF-M101 HVAC PLAN
1/8" = 1'-0"

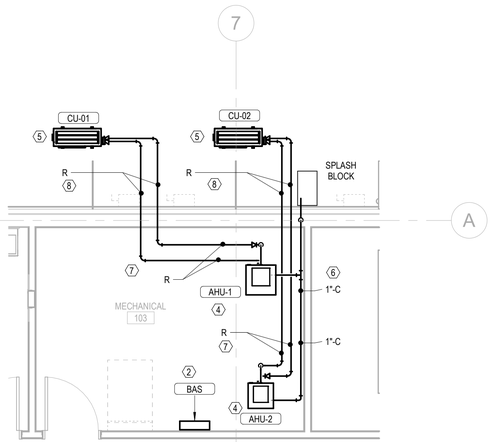

2 MF-M101 PIPING PLAN CALLOUT
1/4" = 1'-0"

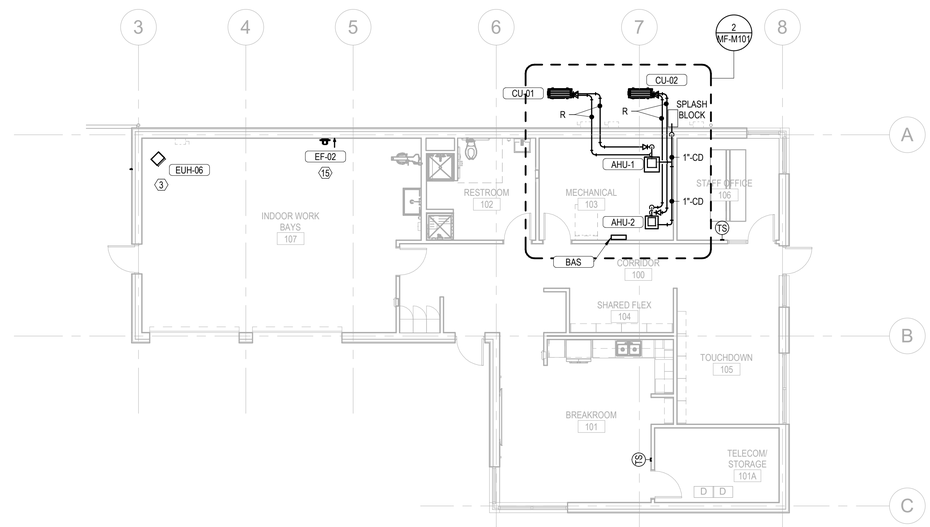

1 MF-M101 PIPING PLAN
1/8" = 1'-0"

KEY NOTES

1. EXPOSED DUCTWORK IS ROUND DOUBLE WALLED PER SPECIFICATION.
2. INSTALL BAS PANEL IN MECHANICAL ROOM.
3. INSTALL UNIT HEATER HIGH IN WORK BAY PER MANUFACTURER'S INSTALLATION INSTRUCTIONS AND CLEARANCES.
4. INSTALL AHU PER MANUFACTURER'S INSTALLATION INSTRUCTIONS AND CLEARANCES. PROVIDE REFRIGERANT PIPING FROM HEAT PUMP AT EXTERIOR. PROVIDE CONDENSATE DRAIN PIPING.
5. INSTALL HEAT PUMP ON CONCRETE HOUSEKEEPING PAD PER MANUFACTURER'S INSTALLATION INSTRUCTIONS AND CLEARANCES.
6. ROUTE CONDENSATE FROM AHU TO EXERIOR AS INDICATED. DISCHARGE ONTO SPLASH BLOCK SLOPING AWAY FROM BUILDING.
7. ROUTE REFRIGERANT PIPING DOWN FROM AHU AND ROUTE LOW THROUGH MECHANICAL ROOM AS INDICATED.
8. EXIT REFRIGERANT PIPING LOW THROUGH EXTERIOR WALL AND ROUTE ACROSS GROUND TO HEAT PUMP AS INDICATED.
9. INSTALL AIR HANDLING UNIT PER MANUFACTURERS INSTALLATION INSTRUCTIONS AND CLEARANCES. PROVIDE SUPPLY DUCT TRANSITION AS REQUIRED. PROVIDE RETURN PLENUM ON RETURN AIR INLET. CONNECT RETURN DUCTWORK INTO PLENUM.
10. INSTALL EXHAUST FAN PER MANUFACTURER'S INSTALLATION INSTRUCTIONS AND CLEARANCES.
11. LOUVER TO BE MOUNTED AT 9'-2" A.F.F. AS MEASURED TO BOTTOM OF LOUVER. MAINTAIN 10' BETWEEN EXHUAST AIR DISCHARGE AND OUTSIDE AIR INTAKE LOCATIONS.
12. LOUVER TO BE MOUNTED HIGH IN WORK BAY AT 8'-3" A.F.F. AS MEASURED TO BOTTOM OF LOUVER. MAINTAIN 10' BETWEEN EXHUAST AIR DISCHARGE AND OUTSIDE AIR INTAKE LOCATIONS.
13. LOUVER TO BE MOUNTED LOW IN WORK BAY AT 12" A.F.F. AS MEASURED TO BOTTOM OF LOUVER. MAINTAIN 10' BETWEEN EXHUAST AIR DISCHARGE AND OUTSIDE AIR INTAKE LOCATIONS.
14. EXPOSED DUCTWORK IN MECHANICAL ROOM SHALL BE SINGLE-WALL RECTANGULAR CONSTRUCTION WITH WRAP INSULATION. ROUTE HIGH THROUGH SPACE. MAINTAIN MINIMUM 6'-8" CLEAR BELOW DUCTWORK.
15. INSTALL EXHAUST FAN PER MANUFACTURER'S INSTALLATION INSTRUCTIONS AND CLEARANCES.

Susan Hatchell
Landscape Architecture, PLLC
711 W. North Street, Raleigh, NC 27603
p: 919-838-9600 f: 919-838-9700

Wooten
129 North Boylan Avenue • Raleigh, NC 27603-1423
(919) 828-0531 • thewootencompany.com
License Number : F-0115

FLOOR PLAN

NORTH CAROLINA PROFESSIONAL ENGINEER SEAL 027928 SCOTT L. ENNIS
Developed by:
1EQB5R3MAC8412...
7/24/2026

LAKE MYRA COUNTY PARK
Wake County, NC

REVISIONS

Date: 07/27/26

MF-M101

Maintenance Building Unit Heater Schedule

Identity	Manufacturer	Model	Heating Airflow Design		Electric Heat		Electrical		Product	Remarks
			Output	Airflow	Rating	Load	Voltage	Phase	Weight	
EUH-06	Markel	F1FUH03003	11,260 Btu/h	400 CFM	3.3 kW	15.9 A	208 V	1	36 lb	1, 2, 3, 4

GENERAL NOTES:

A. BASIS OF DESIGN IS MARKEL
B. EQUIVALENTS: REZNOR, BERKO, INDEECO OR AS LISTED IN SPECIFICATIONS.
C. MOUNTING HEIGHTS ARE TO BOTTOM OF UNIT.

REMARKS:

1. PROVIDE WALL-MOUNTED 24V THERMOSTAT.
2. PROVIDE HANGING BRACKET.
3. PROVIDE FACTORY MOUNTED DISCONNECT SWITCH.
4. BAS CONTRACTOR TO PROVIDE T-STAT.

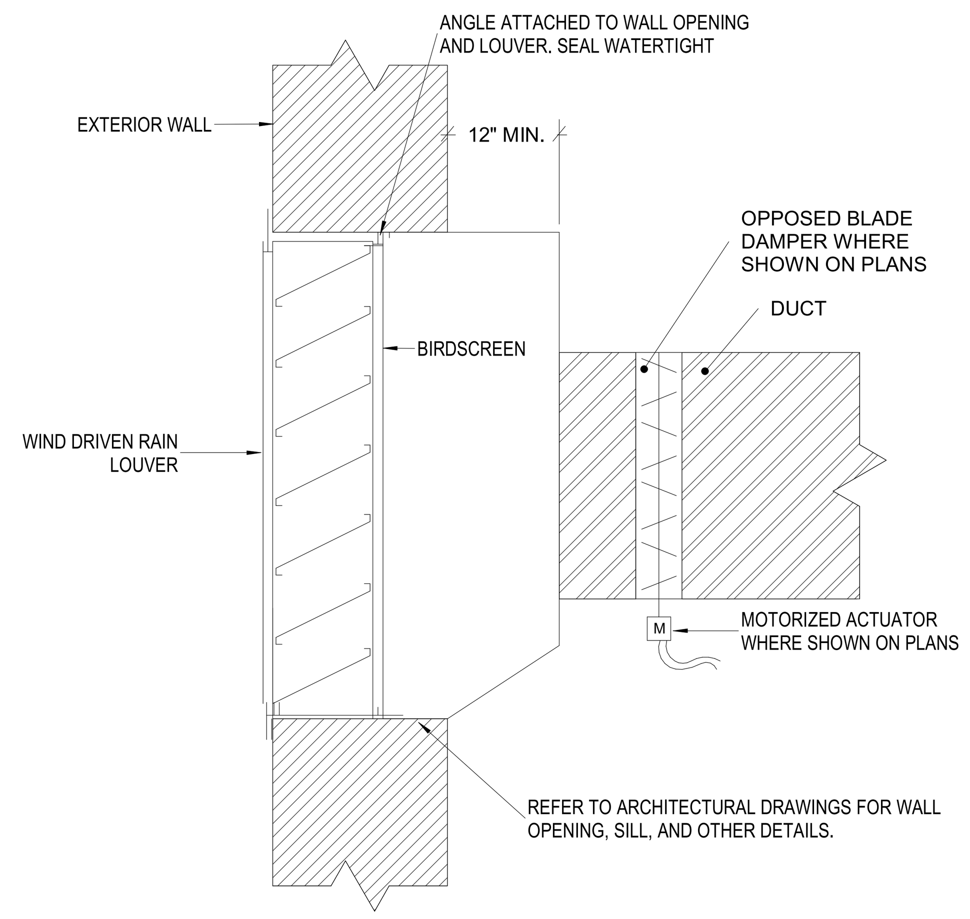

1 MF-M601 DETAIL - OUTSIDE AIR/EXHAUST LOUVER
NOT TO SCALE

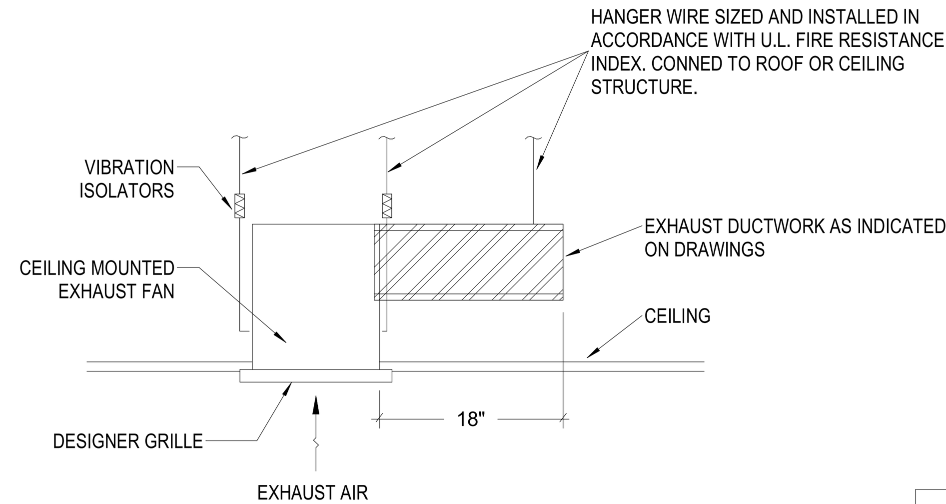

4 MF-M601 DETAIL - CEILING MOUNTED EXHAUST FAN
NOT TO SCALE

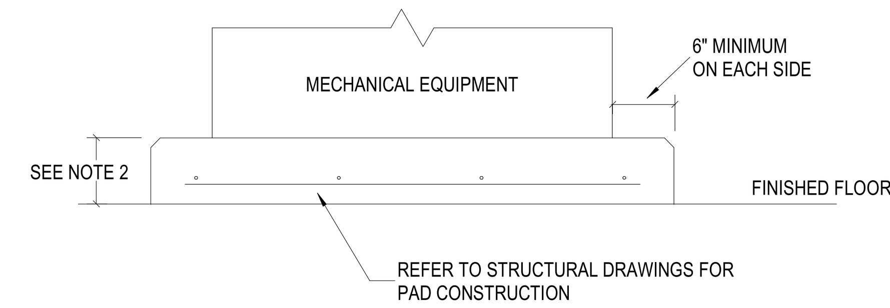

NOTES:

1. ACTUAL PAD SIZE TO BE DETERMINED BY CONTRACTOR, AFTER ALL EQUIPMENT HAS BEEN REVIEWED.

2. PAD SHALL BE 6" HIGH FOR BOILERS AND 4" HIGH FOR ALL AHU'S AND OTHER MECHANICAL EQUIPMENT.

5 MF-M601 DETAIL - MECHANICAL EQUIPMENT SUPPORT PAD
NOT TO SCALE

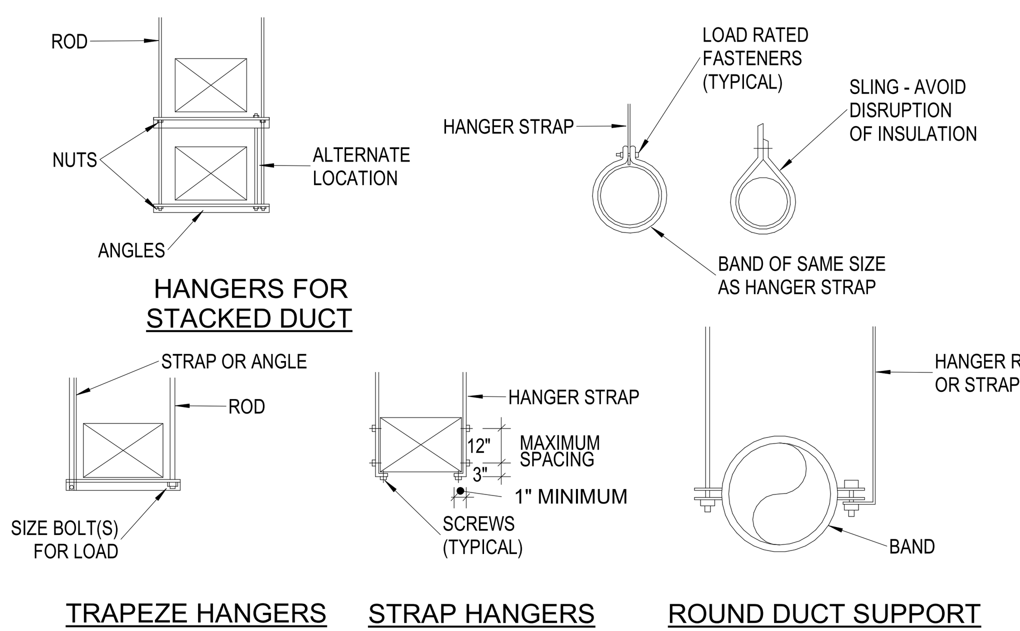

NOTES:

1. REINFORCEMENT MAY BE USED FOR ATTACHMENT IF IT QUALIFIES FOR BOTH DUTIES.

2. DO NOT EXCEED LOAD RATINGS FOR METHOD USED. FROM SMACNA DUCT STANDARDS

2 MF-M601 DETAIL - TYPICAL DUCT HANGERS
NOT TO SCALE

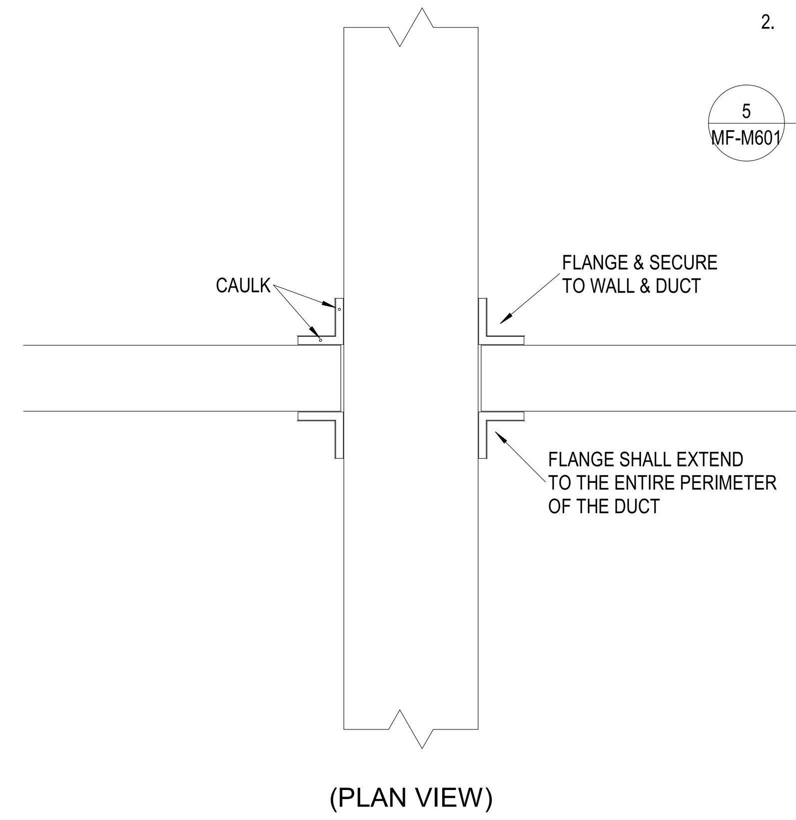

6 MF-M601 DETAIL - NON-RATED DUCT PENETRATION
NOT TO SCALE

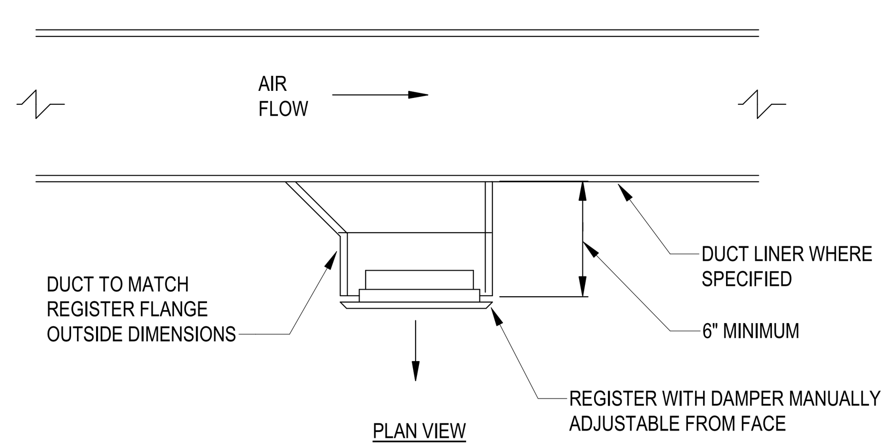

8 MF-M601 TYPICAL DUCT MOUNTED REGISTER (RECTANGULAR DUCT)
NOT TO SCALE

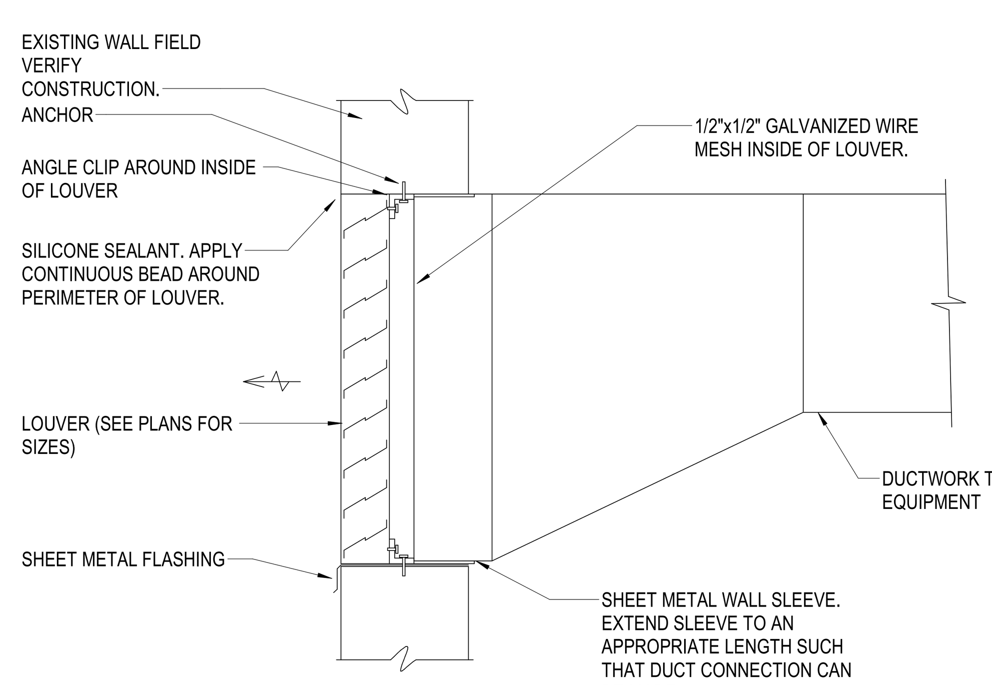

3 MF-M601 LOUVER ASSEMBLY DETAIL
NOT TO SCALE

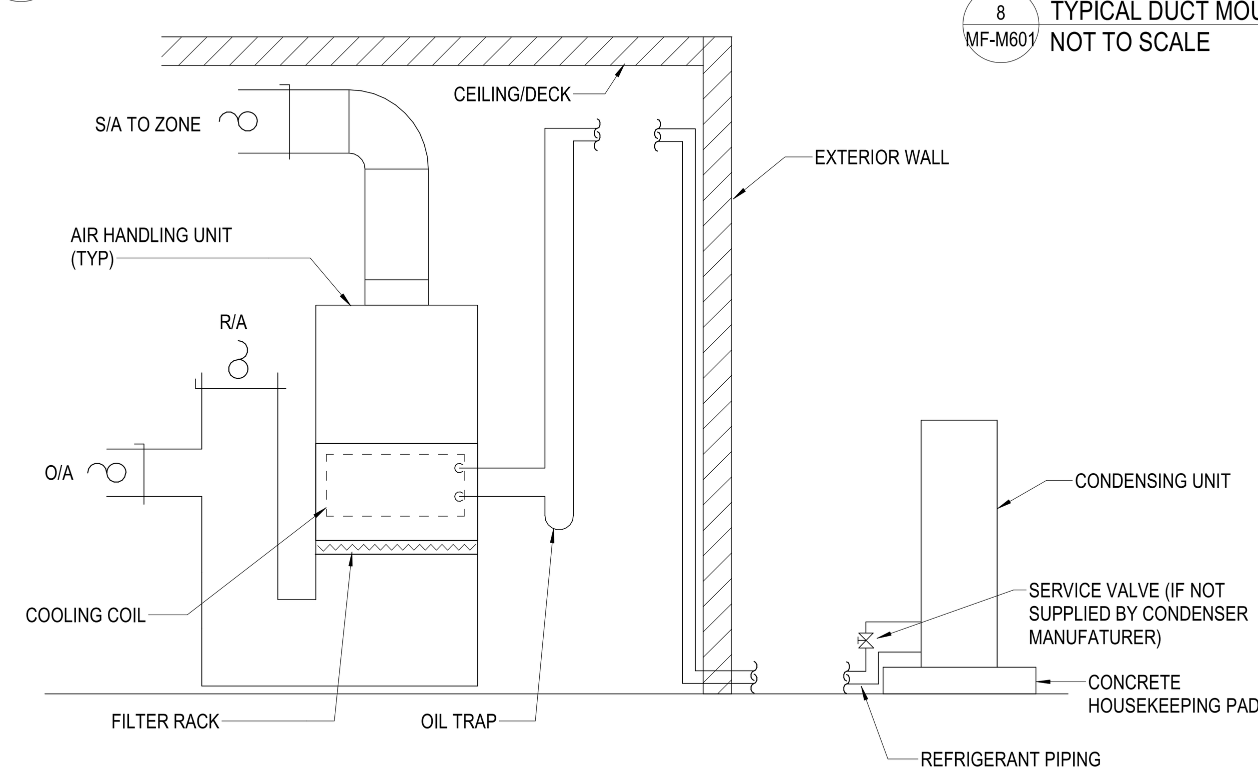

7 MF-M601 DETAIL - SPLIT SYSTEM INSTALLATION W/ VERTICAL AHU
NOT TO SCALE

Maintenance Building Outdoor Split System Schedule

Identity	Manufacturer	Model	Nominal Tons	Rated Cooling Capacity	Rated Heating Capacity	Efficiency	Refrigerant Type	Refrigerant Charge	Electrical		MCA	MOCP	Product Weight	Remarks
									Voltage	Phase				
CU-01	Mitsubishi	PUZ-AK12NL-U1	1.0	12,000 Btu/h	19,000 Btu/h	20.0 SEER2, 9.8 HSPF2	R-454B	4.4 lbm	208 V	1	16.0 A	27.0 A	99 lb	
CU-02	Mitsubishi	PUZ-AK18NL-U1	1.5	18,000 Btu/h	23,000 Btu/h	18.6 SEER2, 8.6 HSPF2	R-454B	4.4 lbm	208 V	1	16.0 A	27.0 A	99 lb	

GENERAL NOTES:
1. PROVIDE NEOPRENE VIBRATION ISOLATION PADS AND CONCRETE HOUSEKEEPING PAD.
2. PERFORMANCE BASED ON 80 DB, 67 WB. AMBIENT 95 DB, 75 WB.
3. PROVIDE HAIL GUARDS FOR CONDENSER COILS.
4. REFRIGERANT LINE SIZES AS RECOMMENDED BY THE EQUIPMENT MANUFACTURER BASED ON HORIZONTAL AND VERTICAL RUNS.

Maintenance Building Indoor Split System Schedule

Identity	Manufacturer	Model	Product Type	Nominal Capacity	Design Airflow Rate	Outdoor Air Intake Flow	Supply Fan	Aux Heat KW	Aux Heat MCA	Aux Heat MOCP	AHU Motor MCA	Electrical		Product Weight	Remarks
							ESP					Voltage	Phase		
AHU-1	Mitsubishi	PVA-AA12NL	Vertical	1.0 ton	240 CFM	45 CFM	0.60 in-wg	3.8	22.6 A	25 A	3.0 A	208 V	1	113 lb	1, 2, 3, 4
AHU-2	Mitsubishi	PVA-AA18NL	Vertical	1.5 ton	570 CFM	70 CFM	0.60 in-wg	3.8	22.6 A	25 A	3.0 A	208 V	1	113 lb	1, 2, 3, 4

GENERAL NOTES:

A. MAXIMUM COIL FACE VELOCITY OF 500 FPM. MAXIMUM FILTER FACE VELOCITY OF 300 FPM.
B. PROVIDE WITH A DOUBLE SLOPED STAINLESS STEEL DRAIN PAN UNDER ALL COIL SECTIONS. EXTEND PIPING TO FLOOR DRAIN.
C. ALL FANS SHALL BE INTERNALLY ISOLATED.
D. ALL UNITS SHALL HAVE AN FILTER SECTION WITH 2", MERV-8 FILTERS. PROVIDE ONE SET IN THE UNIT AND THREE EXTRA SETS. ONE EXTRA SET SHALL BE INSTALLED AFTER THE SYSTEM IS BALANCED AND THE BUILDING IS CLEAN. TWO FINAL SETS ARE FOR FUTURE, TURN OVER TO OWNER.
E. ALL AIR HANDLERS SHALL BE U.L. LISTED.

REMARKS:

1. PROVIDE UNIT WITH AUXILIARY ELECTRIC HEAT ACCESSORY KIT.
2. AIR HANDLING UNIT SHALL BE POWERED SEPARATELY FROM OUTDOOR UNIT. PROVIDE SEPARATE POWER KIT SPTB1.
3. HEATER SHALL BE POWERED SEPARATELY FROM AIR HANDLING UNIT.
4. PROVIDE AUXILIARY HEAT LOCKOUT ACCESSORY TO PREVENT ELECTRIC HEAT FROM OPERATING ABOVE PROGRAMMED SET OUTSIDE TEMPERATURE.

Maintenance Building Fan Schedule

Identity	Manufacturer	Model	Product Type	Fan Design				Fan Drive Type	Weight	Electrical		Remarks
				Capacity	TSP	bhp	RPM			Voltage	Phase	
EF-01	GREENHECK	SP-A125	Square Centrifugal	70 CFM	0.25 in-wg	0.01 hp	900	Direct	0 lb	115 V	1	1
EF-02	COOK	10XW28D17	Wall Propeller	200 CFM	0.10 in-wg	0.03 hp	1565	Direct	0 lb	115 V	1	

GENERAL NOTES:

A. PROVIDE ALL DUCT TRANSITIONS FOR FANS.
B. THE UNIT HOUSING SHALL BE CONSTRUCTED OF ALUMINUM.
C. ALL FANS TO BE U.L. LISTED.
D. PROVIDE WITH INTEGRAL DISCONNECT.
E. EXTERNALLY OR INTERNALLY MOUNTED DISCONNECT SWITCH FURNISHED BY DIVISION 23 AND INSTALLED BY DIVISION 26.
F. EXTERNALLY MOUNTED STARTER FURNISHED BY DIVISION 23 INSTALLED BY DIVISION 26.
G. PROVIDE OVERLOAD PROTECTION FOR ALL FANS, COORDINATE WITH DIVISION 26.
H. PROVIDE SPEED CONTROLLERS FOR ALL DIRECT DRIVE FANS.
I. ESP DOES NOT INCLUDE FACTORY BACKDRAFT DAMPER. THIS PRESSURE DROP SHALL BE ADDED BY THE MANUFACTURER TO THE ESP LISTED WHEN SELECTING FANS.

REMARKS:

1. PROVIDE HANGING VIBRATION ISOLATION KIT WITH NEOPRENE ISOLATORS.
2. FAN SHALL OPERATE CONTINUOUSLY DURING OCCUPIED HOURS. PROVIDE TIME CLOCK TO CONTROL FAN OPERATION. COORDINATE OPERATING HOURS WITH PARK STAFF.
3. PROVIDE DISCONNECT SWITCH, NEMA-1 INDOORS, NEMA 3R OUTDOORS, TOGGLE, MOUNTED AND WIRED.
4. SPARK-A RESISTANT CONSTRUCTION.
5. PROVIDE DISCONNECT SWITCH, OSHA MOTOR SIDE GUARD, WALL HOUSING, AND CAST ALUMINUM CONSTRUCTION.
6. PROVIDE CARBON MONOXIDE SENSOR FOR CONTROLLING FAN.
7. PROVIDE WITH REVERSE ACTING THERMOSTAT.

Maintenance Building Master Louver Schedule

Tag	Manf.	Model	Purpose	CFM	Size	Minimum Free Area (Sq.ft.)	Max FPM	Remarks
LV-01	GREENHECK	ESD-202	EXHAUST	70	8X8	0.1	900	1
LV-02	GREENHECK	ESD-435	EXHAUST	200	14X14	0.4	750	1
LV-03	GREENHECK	ESD-435	INTAKE	200	12X14	0.4	600	1
LV-04	GREENHECK	ESD-202	INTAKE	115	16X8	0.2	600	1

GENERAL NOTES:

A. PROVIDE FRAMED 1/2" x 1/2" ALUMINUM BIRD SCREEN FOR ALL LOUVERS
B. ALL LOUVERS SHALL BE RATED FOR THE PROJECT WIND ZONE. REFER TO STRUCTRAL DRAWINGS.
C. LOUVERS SHALL HAVE 3-COAT 70% PVDF FINISH (AAMA 2605) WITH A DRY FILM THICKNESS OF 2.0 mil MINIMUM. PROVIDE STANDARD AND CUSTOM COLOR CHARTS WITH SUBMITTAL. COLOR SHALL BE SELECTED BY ARCHITECT FROM THE FULL RANGE.
D. ALL LOUVERS SHALL BE AMCA 500-L CERTIFIED FOR AIR PERFORMANCE, WATER PENETRATION,, AND WIND DRIVEN RAIN AND BEAR APPROPRIATE SEAL. ALL LOUVERS SHALL BE RATED AS RAIN PENETRATION CLASS A FOR THE FACE VELOCITY AT THE CFM SCHEDULED.
E. EQUIVALENTS BY RUSKIN, ARROW, AIROLITE, NAILOR, RELIABLE, POTTORFF, OR AS LISTED IN THE SPECIFICATIONS

REMARKS:

1. PROVIDE MOTORIZED DAMPER TO OPEN WHEN ASSOCIATED FAN RUNS

Maintenance Building Grilles, Registers & Diffusers Schedule

ID Type	Service	Manf.	Model	Type	Border Application	Neck Size	Face Size	Remarks
A	Supply	PRICE	SCD	Square Cone	Lay-In Full Face	6"	24x24	1, 2, 3, 4
B	Supply	PRICE	SDGE	Spiral Grille	Duct Mount Frame		<varies>	1, 5
C	Supply	PRICE	SDGE	Spiral Grille	Duct Mount Frame		14X6	1, 5
D	Supply	PRICE	SCD	Square Cone	Surface Mount	6"	12x12	1, 2, 3, 4
T	Return Grille	PRICE	530	Sidewall	Surface Mount		10X10	1, 5, 7
V	Return Grille	PRICE	530	Sidewall	Surface Mount		16X14	1, 5, 7

GENERAL NOTES:

A. BASIS OF DESIGN IS PRICE. EQUIVALENTS BY TITUS, KRUEGER, TUTTLE AND BAILEY, NAILOR, OR AS LISTED IN SPECIFICATIONS
B. PROVIDE VOLUME DAMPERS AT TAKE-OFF FOR EACH GRILLE
C. ALL AIR DISTRIBUTION DEVICES SHALL BE ALUMINUM
D. THE PRICE MODELS SCHEDULED HERE ARE BASIS OF DESIGN, INCLUDING GENERATED NOISE. PROPOSED SUBSTITUTIONS WILL BE JUDGED BY THOSE CRITERIA ALSO
E. WHERE LOCATED IN HARD CEILINGS, PROVIDE ALUMINUM MOUNT FRAME/PLASTER FRAME FOR HARD CEILING THAT ALLOWS DIFFUSER/GRILLE WITH FLEX CONNECTION TO BE LIFTED OUT OF FRAME TO ACCESS CEILING SPACE. TYPICAL OF ALL HARD CEILING LOCATIONS. REFER TO ARCHITECTURAL REFLECTED CEILING PLAN
F. FOR SIDE WALL GRILLES, PROVIDE REMOTE CABLE OPERATED, GEAR DRIVEN BALANCING DAMPER OPERABLE FROM FACE OF DIFFUSER

REMARKS:

1. PROVIDE WITH WHITE ENAMEL FINISH. COLOR AND FINISH SELECTION SHALL BE REVIEWED AND APPROVED BY ARCHITECT.
2. PROVIDE WITH TRIM TO MATCH CEILING TYPE. REFER TO ARCHITECTURAL REFLECTED CEILING PLANS FOR CEILINGS
3. PROVIDE DIFFUSER/GRILLE WITH ROUND NECK OR PROVIDE SQUARE TO ROUND TRANSITION
4. ALL CEILING MOUNTED RETURN GRILLES SHALL BE FULL FACED. NO LAY-IN PANELS ALLOWED
5. PROVIDE OPPOSED BLADE ALUMINUM DAMPER
6. TRANSFER GRILLE. SIZE PER DUCT ON PLAN.
7. WHERE MOUNTED ON A WALL OR OTHER FINISHED ARCHITECTURAL SURFACE, PROVIDE CONCEALED MOUNTING BRACKET OPTION IN LIEU OF COUNTERSUNK SCREW TYPE.

Susan Hatchell
Landscape Architecture, PLLC
711 W. North Street, Raleigh, NC 27603
p: 919-838-9600 f: 919-838-9700

Wooten
120 North Boylan Avenue • Raleigh, NC 27603-1423
(919) 828-0531 • thewootencompany.com
License Number : F-0115

DETAILS & SCHEDULES

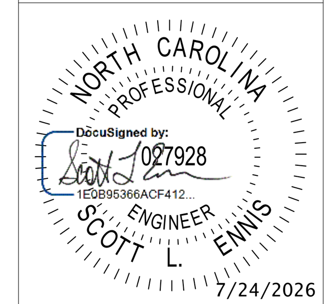

LAKE MYRA COUNTY PARK
Wake County, NC

REVISIONS

Date: 07/27/26

MF-M601

Electrical Abbreviations

1P	1 Pole (2P, 3P, 4P, ETC.)
A, Amp	Ampere
AC	Above Counter
ACLG	Above Ceiling
ADO	Automatic Door Opener
AF	Amp Frame
AFF	Above Finished Floor
AFG	Above Finished Grade
AFI	Arc Fault Circuit Interrupter
AHU	Air Handling Unit
AL	Aluminum
ALT	Alternate
AMP	Ampere
AMPL	Amplifier
ANNUN	Annunciator
APPROX	Approximately
AQ-STAT	Aquastat
ARCH	Architect, Architectural
AS	Amp Switch
AT	Amp Trip
ATS	Automatic Transfer Switch
AUTO	Automatic
AUX	Auxiliary
AV	Audio Visual
AWG	American Wire Gauge
BATT	Battery
BD	Board
BLDG	Building
BMS	Building Management System
C	Conduit
CAB	Cabinet
CAT	Catalog
CATV	Cable Television
CB	Circuit Breaker
CCTV	Closed Circuit Television
CKT	Circuit
CLG	Ceiling
COMB	Combination
CMPR	Compressor
CONN	Connection
CONST	Construction
CONT	Continuation Or Continuous
CONTR	Contractor
CONV	Convector
CP	Circulating Pump
CRT	Cathode-Ray Tube
CT	Current Transformer
CTR	Center
CU	Copper
DCP	Domestic Water Circulating Pump
DEPT	Department
DET	Detail
DIA	Diameter
DISC	Disconnect
DIST	Distribution
DN	Down
DPR	Damper
DS	Safety Disconnect Switch
DT	Double Throw
DWG	Drawing
EC	Electrical Contractor
ELEC	Electric, Electrical
ELEV	Elevator
ELU	Emergency Lighting Unit
EM	Emergency
EMS	Energy Management System
EMT	Electrical Metallic Tubing
EP	Electric Pneumatic
EQUIP	Equipment
EWC	Electric Water Cooler
EXIST	Existing
EXH	Exhaust
EXP	Explosion Proof
FA	Fire Alarm
FABP	Fire Alarm Booster Power Supply Panel
FACP	Fire Alarm Control Panel
FCU	Fan Coil Unit
FIXT	Fixture
FLR	Floor
FLUOR	Fluorescent
FU	Fuse
FUDS	Fused Safety Disconnect Switch
GA	Gauge
GAL	Gallon
GALV	Galvanized
GC	General Contractor
GEN	Generator
GFI	Ground Fault Circuit Interrupter
GFP	Ground Fault Protector
GND	Ground
GRS	Galvanized Rigid Steel (Conduit)
GYP BD	Gypsum Board
HOA	Hands-Off-Automatic Switch
HORIZ	Horizontal
HP	Horsepower
HPF	High Power Factor
HT	Height
HTG	Heating
HTR	Heater
HV	High Voltage
HVAC	Heating, Ventilating And Air Conditioning
IC	Interrupting Capacity
IG	Isolated Ground
IMC	Intermediate Metal Conduit
INCAND	Incandescent
IR	Infrared
I/W	Interlock With
J-BOX	Junction Box
KV	Kilovolt
KVA	Kilovolt-Ampere
KVAR	Kilovolt-Ampere Reactive
KW	Kilowatt
KWH	Kilowatt Hour
LOC	Locate Or Location
LT	Light
LTG	Lighting
LTNG	Lightning
LV	Low Voltage
MAX	Maximum
MAG.S	Magnetic Starter
M/C	Momentary Contact
MC	Mechanical Contractor
MCB	Main Circuit Breaker
MCC	Motor Control Center
MDC	Main Distribution Center
MDP	Main Distribution Panel
MFR	Manufacturer
MFS	Main Fused Disconnect Switch
MH	Manhole
MIC	Microphone
MIN	Minimum
MISC	Miscellaneous
MLO	Main Lugs Only
MMS	Manual Motor Starter
MOA	Multioutlet Assembly
MSP	Motor Starter Panelboard
MSBD	Main Switchboard
MSS	Motor Starter Switch
MT	Mount
MT.C	Empty Conduit
MTS	Manual Transfer Switch
MTR	Motor, Motorized
N.C.	Normally Closed
NEC	National Electrical Code
NEMA	National Electrical Manufacturer's Association
NFDS	Non-Fused Safety Disconnect Switch
NIC	Not In Contract
NL	Night Light
N.O.	Normally Open
NPF	Normal Power Factor
NTS	Not To Scale
OC	On Center
OH	Overhead
OL	Overloads
PA	Public Address
PB	Pull Box Or Pushbutton
PE	Pneumatic Electric
PED	Pedestal
PF	Power Factor
PH	Phase
PIV	Post Indicating Valve
PNL	Panel
PP	Power Pole
PR	Pair
PRI	Primary
PROJ	Projection
PRV	Power Roof Ventilator
PT	Potential Transformer
PVC	Polyvinyl Chloride (Conduit)
PWR	Power
QUAN	Quantity
RCPT	Receptacle
REQD	Required
RM	Room
RSC	Rigid Steel Conduit
RTU	Roof Top Unit
SC	Surface Conduit
SEC	Secondary
SHT	Sheet
SIM	Similar
SLD	Single-Line Diagram
S/N	Solid Neutral
SPEC	Specification
SPKR	Speaker
SP	Spare
SPP	Single-Point Power
SR	Surface Raceway
SS	Stainless Steel
SSW	Selector Switch
S/S	Stop/Start Pushbuttons
STA	Station
STD	Standard
SURF	Surface Mounted
SW	Switch
SWBD	Switchboard
SYM	Symmetrical
SYS	System
TEL	Telephone
TERM	Terminal
TL	Twist Lock
TR	Tamper Resistant
T-STAT	Thermostat
TTC	Telephone Terminal Cabinet
TV	Television
TVTC	Television Terminal Cabinet
TYP	Typical
UC	Under Counter
UE	Underground Electrical
UG	Underground
UH	Unit Heater
UT	Underground Telephone
UTIL	Utility
UV	Ultraviolet
V	Volt
VA	Volt-Amperes
VDT	Video Display Terminal
VERT	Vertical
VFD	Variable Frequency Drive
VOL	Volume
W	Watt
W/	With
WG	Wire Guard
WH	Water Heater
W/O	Without
WP	Weatherproof
XFMR	Transformer
XFR	Transfer

∠	Angle
@	At
▲	Delta
'	Feet
"	Inches
#	Number
Ø	Phase
C	Center Line
P	Plate

ELECTRICAL SYMBOL LEGEND

A	TYPICAL FIXTURE DESIGNATIONS "A" INDICATES FIXTURE TYPE. SEE LIGHT FIXTURE SCHEDULE FOR DESCRIPTION.
E	"E" INDICATES EMERGENCY BATTERY W/ LIGHT FIXTURE
	LIGHT FIXTURES, WITH FIXTURE DESIGNATION
EXIT	WALL MOUNTED EXIT SIGN. SHADED AREAS INDICATE NUMBER OF FACES, DIRECTION ARROWS AS INDICATED.
EXIT	CEILING MOUNTED EXIT SIGN. SHADED AREAS INDICATE NUMBER OF FACES, DIRECTION ARROWS AS INDICATED.
	WALL MOUNTED EMERGENCY BATTERY UNIT.
$	TOGGLE SWITCH, MOUNT CENTER AT 46"AFF.
$3	THREE-WAY SWITCH, MOUNT CENTER AT 46"AFF.
$D	DIMMING SWITCH 0-10V, MOUNT CENTER AT 46"AFF.
$OC	OCCUPANCY SENSOR WALL SWITCH, MOUNT CENTER AT 46"AFF.
OS	CEILING MOUNTED OCCUPANCY SENSOR
SBPG-8	HOME RUN TO PANEL WITH PANEL DESIGNATION (SBPG) & CIRCUIT NUMBER (8). 3/4"C UNLESS NOTED OTHERWISE, SEE RISER DIAGRAM & PANELBOARD SCHEDULES FOR WIRE & CONDUIT SIZES.
	WIRING IN CONDUIT CONCEALED IN WALLS AND ABOVE CEILING.
	WIRING IN CONDUIT UNDERFLOOR OR UNDERGROUND.
	10'-0" DRIVEN GROUND ROD
	DUPLEX RECEPTACLE, MOUNT CENTER AT 18" AFF UNLESS NOTED OTHERWISE
	SINGLE RECEPTACLE, RATING SHALL MATCH BREAKER SIZE
	PANELBOARD, SEE SCHEDULES & DETAILS.
	DISCONNECT SWITCH
	JUNCTION BOX
	CONCEALED SERVICE FLOOR BOX WITH DUPLEX RECEPTACLE
15cd	CONCEALED SERVICE FLOOR BOX WITH DUPLEX RJ45
	DATA/DATA JACK, DATA JACK, CENTER AT 18" AFF.

SEE LIGHT FIXTURE SCHEDULE SHEET 'ES-E001'

Electrical General Notes

A Conductors operating at 50 volts or greater shall be in raceway. Raceway within the structure above the floor slab shall be metal. Raceway below the floor slab and underground raceway outside the structure shall be PVC.

B Low voltage cables or conductors operating at less than 50 volts shall be in metal raceway where installed within walls or inaccessible spaces. Low voltage cables may be run in cable tray where noted. Low voltage cables may be run in cable support hooks above accessible ceilings where noted. Low voltage cable shall be plenum rated in plenum spaces.

B Low voltage cables or conductors operating at less than 50 volts shall be in metal raceway. Low voltage cables may be run in cable tray where noted. Low voltage cable shall be plenum rated in plenum spaces.

C Coordinate locations of devices with architectural elevations and details. Architectural elevations and details take precedence over locations shown on electrical drawings.

D Provide cable or conduit and wire as required to achieve circuiting shown. Size conductors per NEC ampacity and wire fill criteria. Provide dedicated neutral and ground conductors for circuiting, unless noted otherwise. Increase branch circuit and/or feeder conductors including equipment grounding conductors proportionally for no more than 3% voltage drop on branch circuits and 2% on feeders per energy code.

E It is the responsibility of this contractor to coordinate installation of electrical systems and those requiring electrical connections to maintain NEC required clearances, included but not limited to areas above accessible ceilings.

F Coordinate with other trades for proper installation of equipment. Consult the drawings of other trades or crafts to avoid conflicts with equipment, etc. Conflicts shall be resolved prior to rough-in and at no additional cost to the owner.

G Leave the site clean and ready for occupancy. Remove dirt, debris, empty cartons, tools, conduit and wire scraps, and miscellaneous spare equipment and materials used in this division of the work during construction. Components shall be free of dust, grit, and foreign materials and left as new before final acceptance of work.

H The symbols and abbreviations shown on this sheet may or may not be used in this set of drawings.

I Perform work to comply with the standard practices for good workmanship published by National Electrical Contractors Association (NECA). Comply with the latest enforced edition of the National Electrical Code (NEC), local codes, amendments, and ordinances.

J Field coordinate final mechanical and equipment locations along with connection requirements and control wiring prior to rough-in. Adjust corresponding circuit breaker ratings and branch circuiting accordingly.

K Electrical work shall be performed under the supervision of a licensed master electrician. Procure permits and licenses and pay fees associated with this work.

L Materials furnished for this project shall be new, commercial grade, free of defects, and listed by a nationally recognized testing laboratory unless noted otherwise.

M Provide complete operation & maintenance manual including approved submittal drawings, warranty information for product supplied, and manufactures operation and maintenance instructions.

N The contractor is responsible for making final wiring terminations to pre-installed receptacles in office furniture. Contractor is responsible for wiring and installing voice/data devices in office furniture. Coordinate placement of devices with furniture lay-out.

O Security system to be provided under separate contract. It is the responsibility of this contractor to provide conduit provisions, back boxes, rough-ins, sleeves and power to head end equipment for exact requirements prior to start of work.

P Conduit and wire shall not be installed below floor slab unless indicated on plan by dashed conduit.

Q Contractor shall be responsible for wiring electrical items shown on drawings except for items listed in note 'R' below.

R TV outlets, volume controls, nurse call dome lights, nurse call devices, telephone outlets, data outlets, and fire alarm devices shall consist of a back box with conduit stubbed above the accessible ceiling, see stub up detail. Verify size of back box required with device to be installed. Locate back boxes 6" from adjacent power receptacle intended for computer use.

S Furnish and install conduit from back boxes for the following devices into the accessible ceiling space in the corridor, unless noted otherwise:
1/2"C TV outlets
1/2"C Volume controls
1/2"C Door security devices (card readers, door strikes etc..)
1/2"C Nurse call dome lights
3/4"C Nurse call devices
3/4"C Telephone outlets
3/4"C Information outlets
3/4"C Fire alarm devices

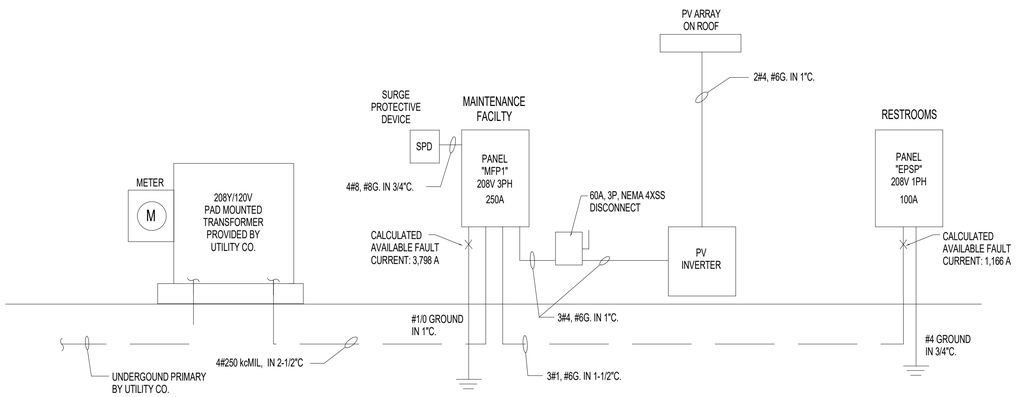

1 MF-E001 ELECTRICAL POWER RISER - MAINTENANCE FACILITY
NOT TO SCALE

MAINTENANCE FACILITY ELECTRICAL SHEET INDEX

MF-E001	COVER SHEET
MF-E101	POWER AND LIGHTING PLANS
MF-E102	ROOF PLAN
MF-E501	DETAILS

MAINTENANCE FACILITY

ELECTRICAL SYSTEM AND EQUIPMENT

METHOD OF COMPLIANCE:

ENERGY CODE: PRESCRIPTIVE__X__ PERFORMANCE_____

ASHRAE 90.1: PRESCRIPTIVE_____ PERFORMANCE_____

LIGHTING SCHEDULE

Lamp type required in fixture - See Fixture Schedule.
Number of lamps in fixture - See Fixture Schedule.
Ballast type used in the fixture - See Specifications.
Number of ballasts in fixture - See Specifications.
Total wattage per fixture - Varies - See Fixture Schedule

Total interior wattage specified versus allowed: 684 watts versus 3962 watts (whole building)
Total exterior wattage specified versus allowed: 197 watts versus 1014 watts

ADDITIONAL PRESCRIPTIVE COMPLIANCE

___ 406.2 More Efficient HVAC Performance
_X_ 406.3 Reduced Lighting Power Density
___ 406.4 Enhanced Lighting Controls
___ 406.5 On-Site Supply of Renewable Energy
___ 406.6 Provision of Dedicated Outdoor HVAC Air System
___ 406.7 High Efficiency Service Water Heating

DESIGNER STATEMENT:
To the best of my knowledge and belief, the design of this building complies with the electrical system and equipment requirements of the 2018 North Carolina State Building Code, Energy Conservation Code.

Susan Hatchell
Landscape Architecture, PLLC
711 W. North Street, Raleigh, NC 27603
p: 919-838-9600 f: 919-838-9700

Wooten
129 North Boylan Avenue • Raleigh, NC 27603-1423
(919) 828-0531 • thewootencompany.com
License Number : F-0115

COVER SHEET

NORTH CAROLINA PROFESSIONAL ENGINEER SEAL 46765 ROBERT E. EGAN 7/24/2026

LAKE MYRA COUNTY PARK
Wake County, NC

REVISIONS

Date: 07/27/26

MF-E001

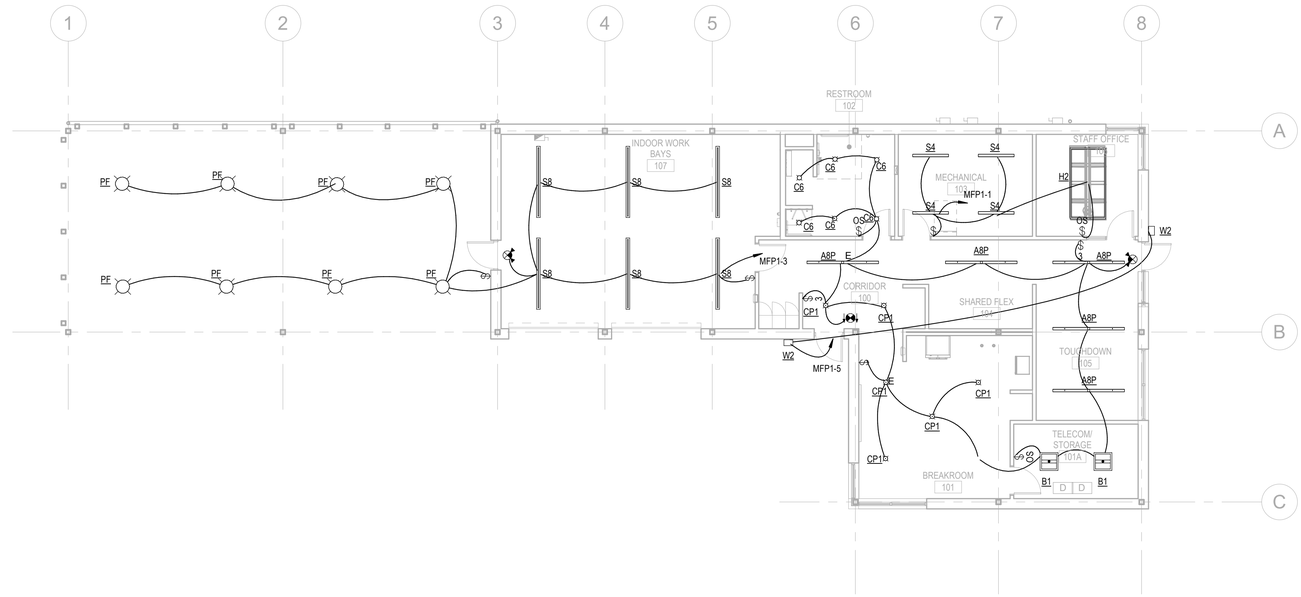

2 MF-E101 LIGHTING PLAN
1/8" = 1'-0"

Panel Name: MFP1
Location: MECHANICAL 103
Supply:
Mounting Surface
Enclosure: Type 1

Voltage: 208Y/120/3Ø, 4W

Mains Type: MCB
Mains Rating: 250 A

SCCR: 22000

Ckt	Description	Rating	Poles	Wire Size	Phase A Load (VA)		Phase B Load (VA)		Phase C Load (VA)		Wire Size	Poles	Rating	Description	Ckt
1	LIGHTING	20	1	2#12, #12G, 3/4"C	693	4492					2#4, #10G, 1"C	2	60	UNIT HEATER WORK BAYS 108	2
3	LIGHTING WORK BAYS 108	20	1	2#12, #12G, 3/4"C			627	4492							4
5	OUTSIDE - WALL LIGHTS	20	1	2#12, #12G, 3/4"C					33	1456	2#12, #12G, 3/4"C	2	20	AHU/CU-1	6
7	REC - MECHANICAL 104	20	1	2#12, #12G, 3/4"C	1080	1456									8
9	REC - INDOOR WORK BAYS 108	20	1	2#12, #12G, 3/4"C			900	1900			2#10, #10G, 3/4"C	2	30	AHU-1 AUX HTR	10
11	REC - BREAKROOM 101	20	1	2#12, #12G, 3/4"C					180	1900					12
13	REC - TELECOM/ STORAGE 101	20	1	2#12, #12G, 3/4"C	540	3120					2#8, #10G, 3/4"C	2	40	AHU/CU-2	14
15	REC - TOUCHDOWN 102	20	1	2#12, #12G, 3/4"C			540	3120							16
17	EF-1 RESTROOM 107	20	1	2#12, #12G, 3/4"C					180	1900	2#10, #10G, 3/4"C	2	30	AHU-2 AUX HTR	18
19	REC - CORRIDOR 106	20	1	2#12, #12G, 3/4"C	720	1900									20
21	REFRIGERATOR	20	1	2#12, #12G, 3/4"C			375	3333			3#8, #10G, 3/4"C	3	40	ELECTRIC WATER HEATER MECHANICAL 104	22
23	REC STAFF OFFICE 106	20	1	2#12, #12G, 3/4"C					720	3333					24
25	REC -CORRIDOR 100	20	1	2#12, #12G, 3/4"C	180	3333									26
27	MICROWAVE BREAKROOM 101	20	1	2#12, #12G, 3/4"C			180	900			2#12, #12G, 3/4"C	1	20	REC 107, 100	28
29	REC-BREAKROOM 101	20	1	2#12, #12G, 3/4"C					900	540	2#12, #12G, 3/4"C	1	20	REC BREAKROOM 101	30
31					8869	720					2#12, #12G, 3/4"C	1	20	REC STAFF OFFICE 105	32
33	PANEL 'EPSP'	150	3	4-1/0, #6G, 1-1/2"C			7700	180			2#12, #12G, 3/4"C	1	20	COPIER	34
35									6425	250	3#12, #12G, 3/4"C	2	20	REC- TELECOM 101A	36
37					0	250									38
39	SURGE PROTECTION	40	3	4#8, #8G, 3/4"C			0	600			3#12, #12G, 3/4"C	2	20	CART CHARGER	40
41									0	600					42
43	SPARE	20	1	--	0	2200					3#8, #10G, 3/4"C	3	40	COMPRESSOR	44
45	SPARE	20	1	--			0	2200							46
47	SPARE	20	1	--					0	2200					48
49	SPACE	--	1	--	--	0					--	1	20	SPARE	50
51	SPACE	--	1	--			--	0			--	1	20	SPARE	52
53	SPACE	--	1	--					--	0	--	1	20	SPARE	54
				Connected Load:	30 kVA		27 kVA		21 kVA						
				Connected Current:	255 A		234 A		172 A						

Load Classification	Connected	Factor	Demand
Motor	85 VA	125.00%	106 VA
Other	14850 VA	100.00%	14850 VA
Lighting - Interior	2062 VA	125.00%	2578 VA
Receptacle - General	10985 VA	95.52%	10493 VA
Receptacle - Dedicated	1700 VA	100.00%	1700 VA
Electric Water Heating	14500 VA	125.00%	18125 VA
HVAC	9152 VA	100.00%	9152 VA
Electric Heat	16283 VA	125.00%	20354 VA
Non-Concurrent	7600 VA	5.00%	380 VA

Panel Totals	
Connected Load:	77 kVA
Connected Current:	214 A
Demand Load:	78 kVA
Demand Current:	216 A

Notes: Service entrance rated.
Provide GFI breaker for circuit, 21.

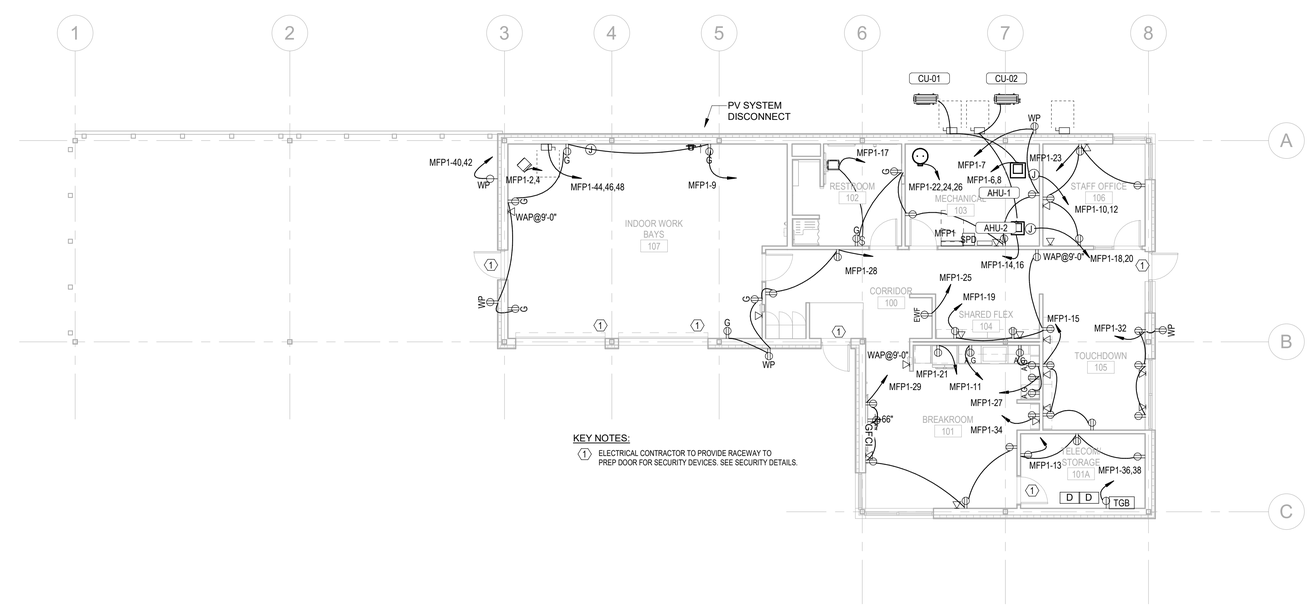

KEY NOTES:

1. ELECTRICAL CONTRACTOR TO PROVIDE RACEWAY TO PREP DOOR FOR SECURITY DEVICES. SEE SECURITY DETAILS.

1 MF-E101 POWER PLAN
1/8" = 1'-0"

Susan Hatchell
Landscape Architecture, PLLC
711 W. North Street, Raleigh, NC 27603
p: 919-838-9600 f: 919-838-9700

Wooten
120 North Boylan Avenue • Raleigh, NC 27603-1423
(919) 828-0531 • thewootencompany.com
License Number : F-0115

POWER AND LIGHTING PLANS

NORTH CAROLINA PROFESSIONAL ENGINEER SEAL 16765 ROBERT E. EGAN 7/24/2026

LAKE MYRA COUNTY PARK
Wake County, NC

REVISIONS

Date: 07/27/26

MF-E101

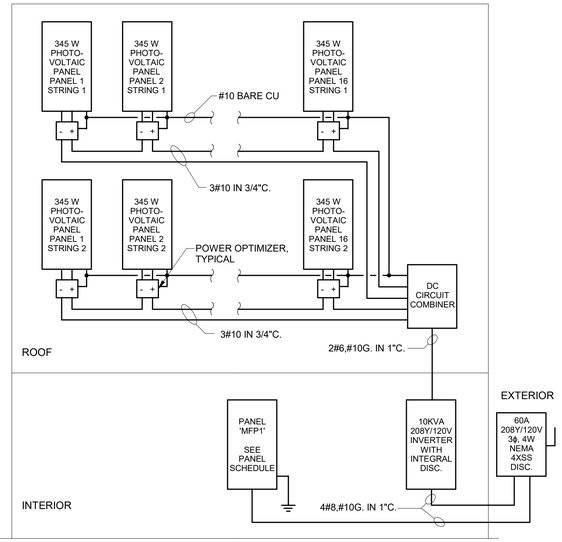

2 MF-E102 PV RISER DIAGRAM MAINTENANCE BUILDING
NOT TO SCALE

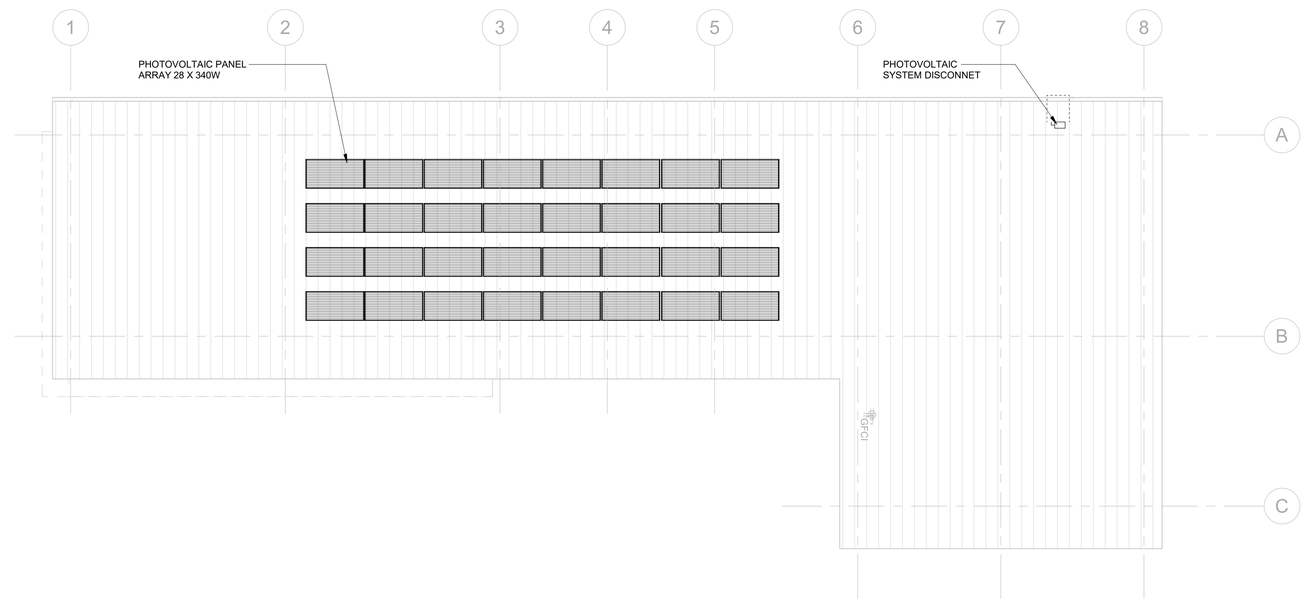

1 MF-E102 MAINTENANCE BUILDING ROOF PLAN
1/8" = 1'-0"

NOTE:
All photovoltaic system components shall bear UL or other North Carolina recognized third party testing agency labels. UL 1703 for flat plate photovoltaic panels and UL 1741 for inverters and interconnection system equipment.

Susan Hatchell
Landscape Architecture, PLLC
711 W. North Street, Raleigh, NC 27603
p: 919-838-9600 f: 919-838-9700

Wooten
120 North Boylan Avenue • Raleigh, NC 27603-1423
(919) 828-0531 • thewootencompany.com
License Number : F-0115

ROOF PLAN

NORTH CAROLINA PROFESSIONAL ENGINEER SEAL
Signed by: 16765
ROBERT E. EGAN
7/24/2026

LAKE MYRA COUNTY PARK
Wake County, NC

REVISIONS

Date: 07/27/26

MF-E102

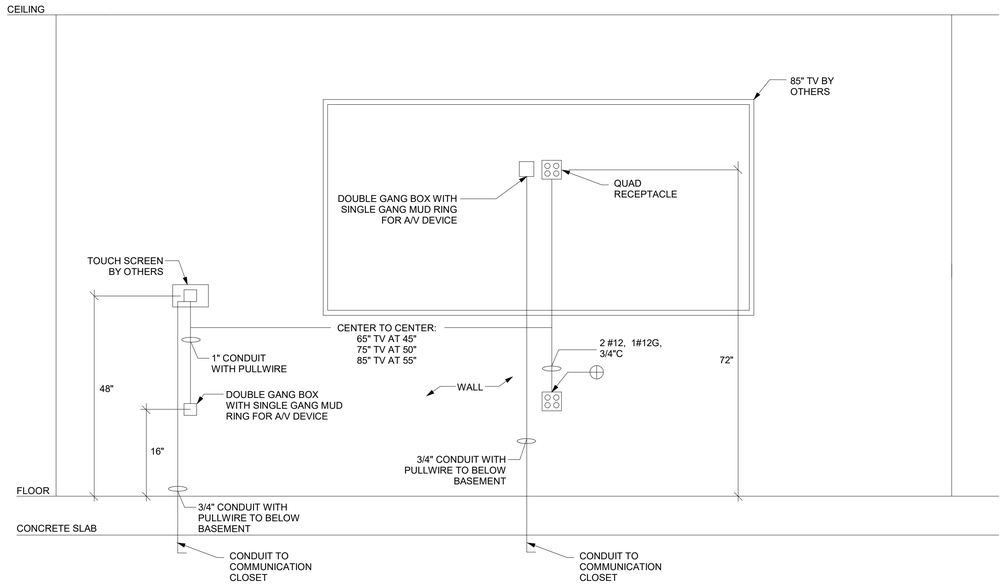

1 MF-E501 AV MOUNTING HEIGHT DETAIL
NOT TO SCALE

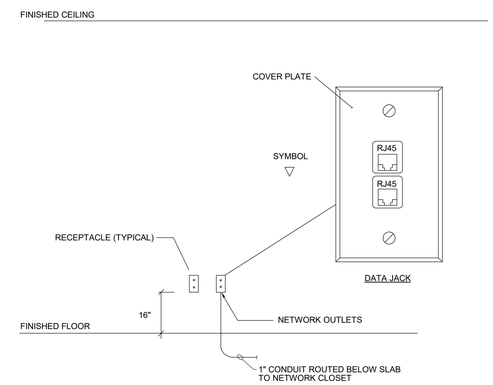

GENERAL NOTES:

A. ELECTRICAL CONTRACTOR SHALL PROVIDE ALL CONDUIT, BOXES AND RECEPTACLES.

B. ALL CAT-6 WIRING, FACEPLATES AND RJ45 CONNECTORS BY DATA CONTRACTOR.

C. PROVIDE AN EMPTY CONDUIT WITH BLANK FACEPLATE AND PULL STRING.

D. VERIFY LOCATIONS OF CASEWORK, CHALK BOARDS AND TACK BOARDS PRIOR TO INSTALLATION.

3 MF-E501 DETAIL - TYPICAL NETWORK OUTLET
NOT TO SCALE

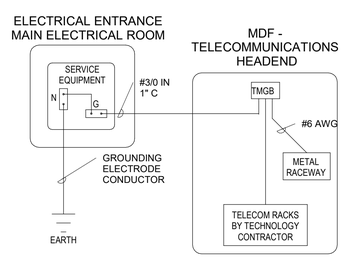

NOTES:

A. IT IS THE INTENT FOR THE TELECOMMUNICATION GROUNDING SYSTEM TO UTILIZE THE "GROUND ELECTRODE CONDUCTOR (GEC)" ASSOCIATED WITH THE ELECTRICAL SERVICE ENTRANCE TO THE PROJECT SITE.

B. FROM THE GEC, THE ELECTRICAL CONTRACTOR SHALL INSTALL A BONDING CONDUCTOR WHICH WILL CONNECT THE GEC TO A TELECOMMUNICATIONS MAIN GROUNDING BUS BAR (TMGB) LOCATED IN MDF ROOM. THE BONDING CONDUCTOR SHALL BE BONDED TO THE GEC AND THE TMGB. ADDITIONALLY, THE TMGB SHALL BE BONDED TO THE CLOSEST

TELECOMMUNICATIONS GROUNDING SYSTEM TO BE PROVIDED BY THE ELECTRICAL CONTRACTOR

4 MF-E501 DETAIL - TELECOMMUNICATIONS SYSTEM GROUNDING
NOT TO SCALE

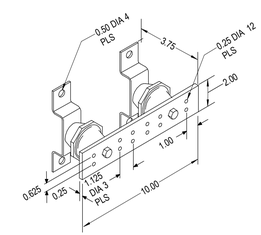

TGB

GENERAL NOTES:

1. MOUNT BACKBOARD MOUNTED BUSBARS @ 8'-6" AFF. UNLESS DIRECTED OTHERWISE BY OWNER.

2. THIS GROUNDING DETAIL IS APPLICABLE TO MDF(MAIN TELECOM) & IDF(TELECOM) CLOSETS.

2 MF-E501 DETAIL - TELECOMMUNICATIONS GROUNDING
NOT TO SCALE

Susan Hatchell
Landscape Architecture, PLLC
711 W. North Street, Raleigh, NC 27603
p: 919-838-9600 f: 919-838-9700

Wooten
129 North Boylan Avenue • Raleigh, NC 27603-1423
(919) 828-0531 • thewootencompany.com
License Number : F-0115

DETAILS

NORTH CAROLINA PROFESSIONAL ENGINEER SEAL 16765 ROBERT E. EGAN 7/24/2026

LAKE MYRA COUNTY PARK
Wake County, NC

REVISIONS

Date: 07/27/26

MF-E501