LAKE MYRA COUNTY PARK
EAST PARCEL SHELTER
Wake County, North Carolina
JULY 27, 2026 – CONSTRUCTION DOCUMENT SET

SITE DATA

NAME:	LAKE MYRA COUNTY PARK	
OWNER:	WAKE COUNTY	
DEVELOPER:	WAKE COUNTY	
CONTACT:	ERIC STAEHLE PLA, ASLA, SENIOR FACILITIES PROJECT MANAGER	
ADDRESS:	WAKE COUNTY OFFICE BUILDING, 11th FLOOR, RALEIGH, NC 27602	
PHONE NUMBER:	919.856.6369	
	WESTERN PARCEL:	EASTERN PARCEL:
PROPERTY ADDRESS:	0 S SMITHFIELD ROAD	10505 POOLE ROAD
PARCEL ID NUMBER (PIN):	1763-51-9788	1763-84-1077
DEED BOOK AND PAGE:	DB: 12448, PG: 2075	DB: 12590, PG: 1251
ZONING DISTRICT:	WAKE COUNTY, ZONED R-40	WENDELL, ZONED R3
TOTAL LAND AREA:	91.81 ACRES	125.76 ACRES
PROPOSED DISTURBED AREA:	6.5 ACRES	12 ACRES
CURRENT USE:	UNDEVELOPED	UNDEVELOPED
PROPOSED USE:	PARK/RECREATION FACILITY	PARK/RECREATION FACILITY
EXISTING IMPERVIOUS AREA:		
PROPOSED IMPERVIOUS AREA:		
PROPOSED BUILDING:		
FLOOD INFORMATION:		
WATER AND SEWER SERVICE:		
ELECTRICAL SERVICE:		

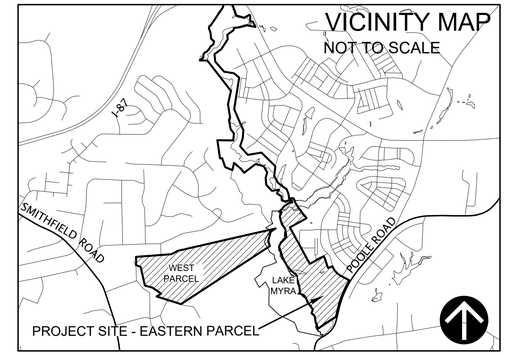

SHEET INDEX

COVER SHEET

ARCHITECTURE
ES-G001 – ABBREVIATIONS, SYMBOLS, AND GENERAL NOTES
ES-G101 – CODE SUMMARY
ES-A001 – PARTITIONS
ES-A101 – FLOOR PLANS
ES-A111 – REFLECTED CEILING AND ROOF PLANS
ES-A131 – FINISH PLAN, LEGEND & SCHEDULE
ES-A132 – SIGNAGE PLAN & DETAILS
ES-A201 – EXTERIOR ELEVATIONS
ES-A202 – EXTERIOR PANEL LAYOUT
ES-A203 – EXTERIOR PANEL LAYOUT
ES-A301 – BUILDING SECTIONS
ES-A400 – TYPICAL TOILET AND BATH ACCESSORIES
ES-A401 – ENLARGED TOILET PLANS AND ELEVATIONS
ES-A421 – WALL SECTIONS
ES-A422 – WALL SECTIONS
ES-A423 – WALL SECTIONS
ES-A501 – PLAN DETAILS
ES-A502 – BENCH DETAILS
ES-A505 – AIR BARRIER DETAILS
ES-A525 – ROOF DETAILS
ES-A526 – ROOF DETAILS
ES-A527 – ROOF DETAILS
ES-A601 – DOOR SCHEDULE

STRUCTURAL
ES-S001 – GENERAL NOTES
ES-S002 – GENERAL NOTES
ES-S003 – GENERAL NOTES
ES-S004 – GENERAL NOTES
ES-S101 – SHELTER A SLAB AND FOUNDATION PLANS
ES-S102 – SHELTER A AND B ROOF FRAMING PLAN
ES-S301 – SECTIONS
ES-S302 – SECTIONS
ES-S501 – TYPICAL DETAILS
ES-S502 – TYPICAL DETAILS
ES-S503 – TYPICAL DETAILS
ES-S504 – TYPICAL DETAILS

PLUMBING
ES-P001 – COVER SHEET
ES-P101 – FLOOR PLANS
ES-P700 – DETAILS

MECHANICAL
ES-M001 – COVER SHEET
ES-M101 – DUCTWORK PLANS
ES-M601 – DETAILS & SCHEDULES

ELECTRICAL
ES-E001 – COVER SHEET
ES-E101 – POWER AND LIGHTING PLANS
ES-E301 – RISERS
ES-E401 – DETAILS

Landscape Architect / Prime Consultant:
Susan Hatchell Landscape Architecture, PLLC
711 W. North Street
Raleigh, NC 27603
T: (919) 838-9600

Civil Engineer, Site Structural, and Surveyor:
NV5
3300 Regency Parkway, Suite 100
Cary, NC 27518

Architect:
Esse Architects
632 Pershing Road
Raleigh, NC 27608

Building Structural Engineer:
Lynch Mykins Structural Engineers, PC
301 N. West Street, Suite 105
Raleigh, NC 27603

MEP Engineer:
The Wooten Company
120 N Boylan Avenue
Raleigh, NC 27603

Docusign Envelope ID: F77992C0-AE1F-8388-8194-24A899A3C9C0

AREA MAP

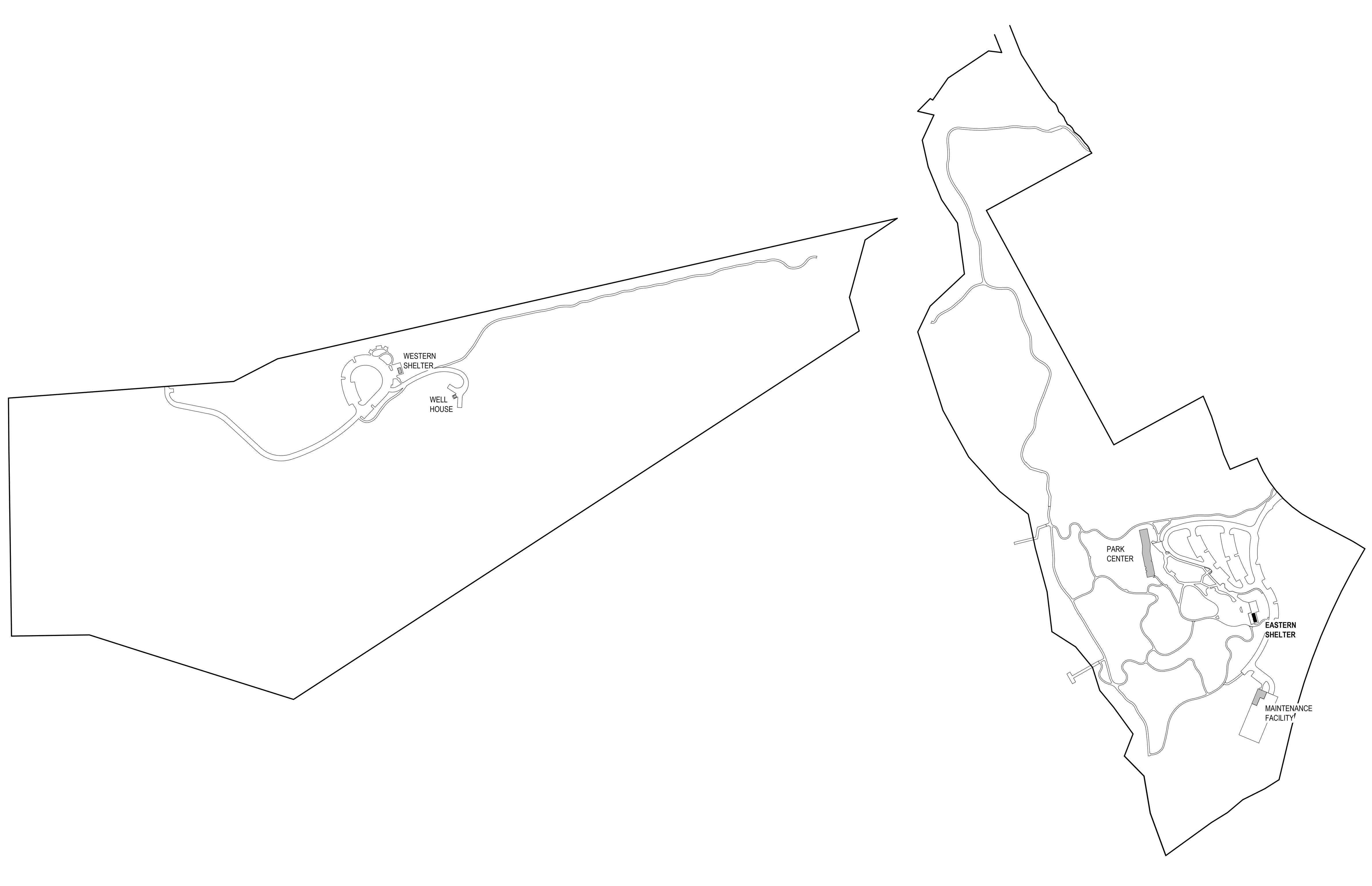

ABBREVIATIONS

ABBR.	FULL DESCRIPTION
@	AT
A/C	AIR CONDITION(ER)(ING)
AB	AIR BARRIER
ACC	ACCESSIBLE
ACM	ALUMINUM COMPOSITE MATERIAL
ADJ	ADJACENT
AFF	ABOVE FINISH FLOOR
AL	ALUMINUM
ALT	ALTERNATE
ARCH	ARCHITECT(URAL)
BD	BOARD
BFF	BELOW FINISH FLOOR
BLDG	BUILDING
BLKG	BLOCKING
BOS	BOTTOM OF STEEL
BRG	BEARING
CG	CORNERGUARD
CJ	CONTROL JOINT
CL	CENTERLINE
CLG	CEILING
CLR	CLEAR/CLEARANCE
CMU	CONCRETE MASONRY UNIT
COL	COLUMN
CONC	CONCRETE
CONT	CONTINUOUS
CPT	CARPET
CW	CURTAIN WALL
DEMO	DEMOL(ISH)(ITION)
DF	DRINKING FOUNTAIN
DIA	DIAMETER
DIM	DIMENSION
DN	DOWN
DS	DOWNSPOUT
DTL	DETAIL
DWG	DRAWING
EA	EACH
EIFS	EXTERIOR INSULATION AND FINISH SYSTEM
ELEC	ELECTRICAL
EOD	EDGE OF DECK
EOS	EDGE OF STEEL
EQ	EQUAL
EWC	ELECTRIC WATER COOLER
EXST	EXISTING
EXT	EXTERIOR
FD	FLOOR DRAIN
FE	FIRE EXTINGUISHER
FEC	FIRE EXTINGUISHER CABINET
FF	FINISH FLOOR
FIN	FINISH
FLR	FLOOR
FPRF	FIREPROOFING
FRT	FIRE RETARDANT TREATED
FT	FOOT/FEET

ABBREVIATIONS

ABBR.	FULL DESCRIPTION
FV	FIELD VERIFY
GA	GAUGE
GALV	GALVANIZED
GC	GENERAL CONTRACTOR
GFRC	GLASS FIBER REINFORCED CONCRETE
GL	GLASS
GWB	GYPSUM WALLBOARD
GYP	GYPSUM
HGT	HEIGHT
HM	HOLLOW METAL
HR	HOUR
HVAC	HEATING, VENTILATION, AND AIR CONDITIONING
INFO	NFORMATIONI
INT	INTERIOR
JT	JOINT
LAV	LAVATORY
LB	POUND
LH	LEFT HAND
MAX	MAXIMUM
MECH	MECHANICAL
MFR	MANUFACTURER
MIN	MINIMUM
MISC	MISCELLANEOUS
MO	MASONRY OPENING
MTL	METAL
N	NORTH
NA	NOT APPLICABLE
NC	NON-COMBUSTIBLE
NCSBC	NORTH CAROLINA STATE BUILDING CODE
NIC	NOT IN CONTRACT
NO	NUMBER
NTS	NOT TO SCALE
OC	ON CENTER
OM	ORNAMENTAL METAL
OPP	OPPOSITE
PL	PLATE
PLAM	PLASTIC LAMINATE
PLBG	PLUMBING
PME	PLUMBING/MECHANICAL/ELECTRICAL
PT	PRESSURE-TREATED
PVC	POLYVINYL CHLORIDE
PWD	PLYWOOD
RCP	REFLECTED CEILING PLAN
RD	ROOF DRAIN
RDL	ROOF DRAIN LEADER
REF	REFRIGERATOR
REINF	REINFORCE(D)(ING)(MENT)
REQ	REQUIRED
RH	RIGHT HAND
RM	ROOM
RO	ROUGH OPENING
RTU	ROOF TOP UNIT
SCW	SOLID CORE WOOD

ABBREVIATIONS

ABBR.	FULL DESCRIPTION
SF	SQUARE FOOT/FEET
SFT	STOREFRONT
SIM	SIMILAR
SPEC	SPECIFICATION
SPECS	SPECIFICATIONS
SQ	SQUARE
SS	STAINLESS STEEL
STD	STANDARD
STL	STEEL
SUSP	SUSPENDED
T&G	TONGUE AND GROOVE
THRU	THROUGH
TLT	TOILET
TOBB	TOP OF BOND BEAM
TOM	TOP OF MASONRY
TOP	TOP OF PARAPET
TOS	TOP OF STEEL
TSTAT	THERMOSTAT
TYP	TYPICAL
UL	UNDERWRITERS LABORATORY
UON	UNLESS OTHERWISE NOTED
VB	VAPOR BARRIER
VCT	VINYL COMPOSITION TILE
VIF	VERIFY IN FIELD
W/	WITH
W/I	WITHIN
W/O	WITHOUT
WC	WATER CLOSET
WD	WOOD
WT	WEIGHT
WWF	WELDED WIRE FABRIC

MATERIAL LEGEND

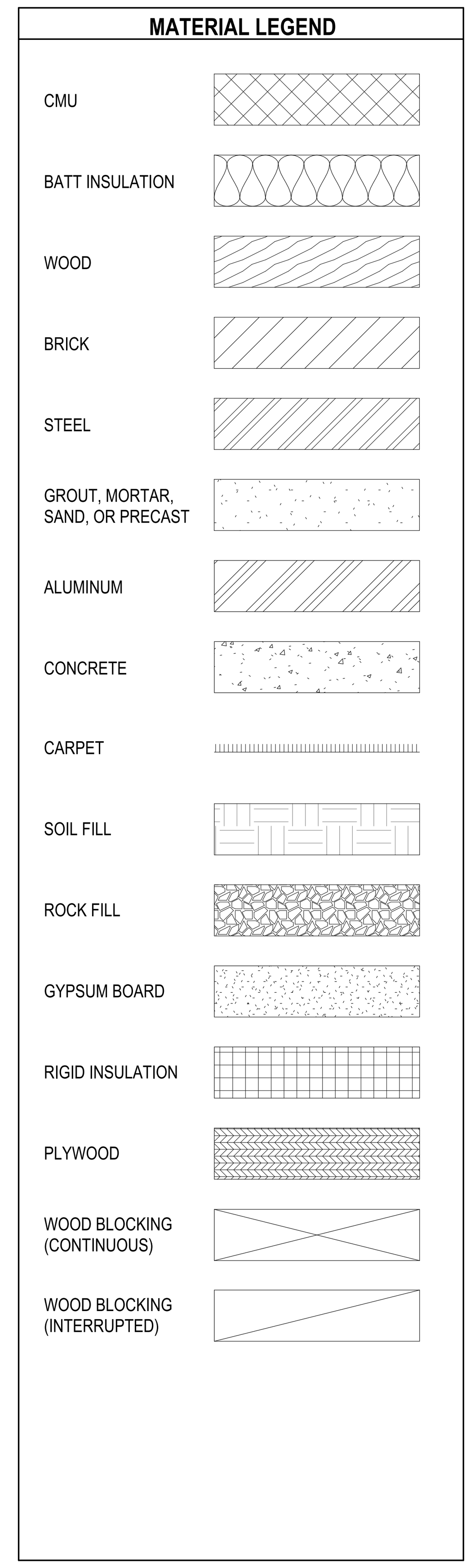

SYMBOL LEGEND

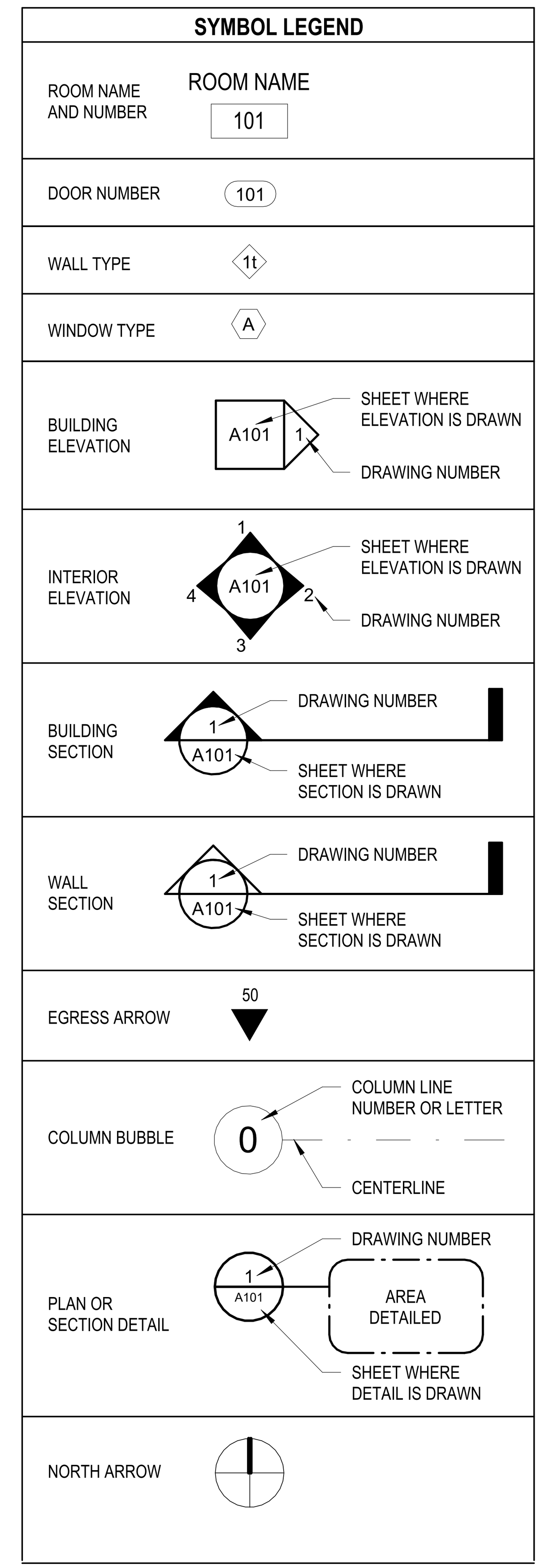

GENERAL NOTES

1. GENERAL CONTRACTOR IS RESPONSIBLE FOR OBTAINING PERMITS AND INSPECTIONS REQUIRED BY PUBLIC AUTHORITIES GOVERNING THE WORK.
2. REVIEW DOCUMENTS AND VERIFY DIMENSIONS AND FIELD CONDITIONS. REPORT ANY CONFLICTS OR OMISSIONS TO THE ARCHITECT FOR CLARIFICATION PRIOR TO PERFORMING ANY WORK IN QUESTION.
3. CONTRACTOR TO NOTIFY ARCHITECT OF ANY DISCREPANCIES BETWEEN ARCHITECTURAL AND CONSULTANT DRAWINGS AND SHALL OBTAIN WRITTEN CLARIFICATION FROM ARCHITECT BEFORE PROCEEDING WITH THE WORK IN QUESTION OR RELATED WORK.
4. SUBMIT REQUESTS FOR SUBSTITUTIONS, REVISIONS, OR CHANGES TO ARCHITECT FOR REVIEW PRIOR TO PURCHASE, FABRICATION, OR INSTALLATION.
5. OWNER WILL PROVIDE WORK NOTED "BY OTHERS" OR "NIC" UNDER SEPARATE CONTRACT. INCLUDE SCHEDULE REQUIREMENTS IN CONSTRUCTION PROGRESS SCHEDULE AND COORDINATE TO ASSURE ORDERLY SEQUENCE OF INSTALLATION, UNLESS OTHERWISE DIRECTED. NOTIFY ARCHITECT OF ANY CONFLICTS OR DISCREPANCIES WITH NIC ITEMS.
6. COORDINATE TELECOMMUNICATIONS, DATA, AND SECURITY SYSTEM INSTALLATIONS.
7. DO NOT SCALE DRAWINGS; WRITTEN DIMENSIONS GOVERN. IN CASE OF CONFLICT, CONSULT THE ARCHITECT.
8. PROVIDE A PORTABLE FIRE EXTINGUISHER WITHIN 75 FOOT TRAVEL DISTANCE TO ALL PORTIONS OF THE BUILDING ON EACH FLOOR, AND ADDITIONAL FIRE EXTINGUISHERS AS REQUIRED BY FIRE OR BUILDING FIELD INSPECTORS.
9. PROVIDE ILLUMINATED EXIT SIGN OVER REQUIRED EXITS, WHERE SHOWN ON DRAWINGS, AND ADDITIONAL SIGNS AS REQUIRED BY FIRE OR BUILDING FIELD INSPECTORS. CONNECT EXIT SIGNS TO EMERGENCY POWER CIRCUITS. SEE ELECTRICAL DRAWINGS.
10. PRIOR TO CORING SLAB FOR FLOOR POWER OR DATA, OR POURING AROUND POWER/DATA LOCATIONS, REVIEW LOCATIONS WITH ARCHITECT AND OWNER.
11. GANG ADJACENT LIGHT SWITCHES AND COVER WITH A SINGLE PLATE.
12. MAINTAIN INTEGRITY OF FIRE RESISTANCE RATING OF ALL RATED SHAFT ENCLOSURES AND RATED PARTITIONS BEHIND RECESSED WALL ACCESSORIES, SUCH AS FIRE EXTINGUISHER CABINETS, TOILET ACCESSORIES, AND ELECTRICAL BOXES.
13. NO EXPOSED CONDUIT, WIRING, PIPING, OR BOXES ARE PERMITTED WITHOUT ARCHITECT AND OWNER APPROVAL, UNLESS SPECIFICALLY NOTED OTHERWISE.
14. GENERAL CONTRACTOR WILL BE RESPONSIBLE FOR COORDINATION BETWEEN THE TRADES PROVIDING SYSTEMS IN OPEN CEILING CONDITIONS. COORDINATION DRAWINGS AND ANY CONFLICTS ARE TO BE REVIEWED WITH THE ARCHITECT PRIOR TO INSTALLATION.
15. REFER TO THE PROJECT MANUAL FOR COMPLETE GENERAL REQUIREMENTS AND CONDITIONS OF THE CONTRACT. THE PROJECT MANUAL SHALL TAKE PRECEDENCE OVER THESE GENERAL NOTES IN THE EVENT OF A CONFLICT.
16. IF PROVIDED, REFER TO ENLARGED PLANS AND PLAN DETAILS FOR ADDITIONAL INFORMATION AND DIMENSIONS.
17. TYPICAL DETAILS SHOWN ON THE DRAWINGS SHALL BE INCORPORATED AT ALL APPROPRIATE LOCATIONS WHETHER OR NOT SPECIFICALLY REFERENCED AT EACH LOCATION.
18. IN AREAS OF HARD CEILING, BUILDING SYSTEMS SHALL BE CONFIGURED TO AVOID OR MINIMIZE ABOVE-CEILING ACCESS. THE LOCATION OF ALL ACCESS DOORS MUST BE COORDINATED WITH AND APPROVED BY ARCHITECT PRIOR TO THE INSTALLATION OF ANY ABOVE-CEILING EQUIPMENT, DAMPERS, VALVES, JUNCTION BOXES, ETC. ANY ACCESS DOORS OR PANELS REQUIRED IN WALLS MUST ALSO BE COORDINATED WITH AND APPROVED BY THE ARCHITECT PRIOR TO THE INSTALLATION OF THE EQUIPMENT REQUIRING ACCESS.
19. CONTRACTOR SHALL BE SOLELY RESPONSIBLE FOR THE ACCURACY OF HIS MEASUREMENTS AND TAKE-OFFS FOR MATERIAL ORDERS.
20. VARIATIONS IN FLOOR LEVEL IN EXCESS OF 1/8" FOR EVERY 10'-0" (U.O.N.) SHALL BE LEVELED BY CONTRACTOR.

Susan Hatchell
Landscape Architecture, PLLC
711 W. North Street, Raleigh, NC 27603
p: 919-838-9600 f: 919-838-9700

Esse Architects

ABBREVIATIONS, SYMBOLS, AND GENERAL NOTES

LAKE MYRA COUNTY PARK
Wake County, NC

REVISIONS

Esse Architects P.A. Registered Architectural Corporation 52498 North Carolina Raleigh, NC

MIRANDA DOWNER POTTHOFF Registered Architect 11663 North Carolina Raleigh, NC
Miranda Potthoff
7/27/2026

Date: 07/27/26

ES-G001

Docusign Envelope ID: F77992C0-AE1F-8388-8194-24A899A3C9C0

2018 APPENDIX B - EASTERN SHELTER
BUILDING CODE SUMMARY FOR ALL COMMERCIAL PROJECTS
(EXCEPT 1 AND 2-FAMILY DWELLINGS AND TOWNHOUSES)

NAME OF PROJECT: LAKE MYRA COUNTY PARK
ADDRESS: EASTERN PARCEL - 10505 POOLE ROAD, WENDELL, NC 27591

OWNER: ERIC STAEHLE PHONE #: (919)856-6369 E-MAIL: eric.staehle@wake.gov
AUTHORIZED AGENT: JENNIFER STEED PHONE #: (919)845-8397 E-MAIL: jennifer@susanhatchell.com
OWNED BY: ■ COUNTY ☐ PRIVATE ☐ STATE
CODE ENFORCEMENT JURISDICTION: ☐ CITY: RALEIGH, NC ■ COUNTY: WAKE ☐ STATE

CONTACT: JENNIFER STEED, SUSAN HATCHELL LANDSCAPE ARCHITECTURE

DESIGNER	FIRM	NAME	LICENSE #	PHONE #	EMAIL
ARCHITECTURAL	ESSE ARCHITECTS	MIRANDA POTTHOFF	11663	(919)270-6455	miranda@esse-architects.com
LANDSCAPE	SUSAN HATCHELL LANDSCAPE ARCH.	SUSAN HATCHELL	528	(919)845-8397	susan@susanhatchell.com
CIVIL	NV5	MICHAEL ALLEN	22514	(919)858-1888	michael.allen@nv5.com
ELECTRICAL	THE WOOTEN COMPANY	ROBERT EGAN	16765	(919)828-0531	began@thewootencompany.com
FIRE ALARM	THE WOOTEN COMPANY	ROBERT EGAN	16765	(919)828-0531	began@thewootencompany.com
PLUMBING	THE WOOTEN COMPANY	SCOTT ENNIS	029728	(919)828-0531	sennis@sigmaes.com
MECHANICAL	THE WOOTEN COMPANY	SCOTT ENNIS	029728	(919)828-0531	sennis@sigmaes.com
SPRINKLER	N/A				
STRUCTURAL	LYNCH MYKINS / IMEG	SCOTT FRANCIS	044996	(757) 502-8527	scott.m.francis@imegcorp.com
RETAINING WALLS	N/A				

2018 NC BUILDING CODE: ■ NEW CONSTRUCTION ☐ PHASED CONSTRUCTION
☐ 1ST TIME INTERIOR COMPLETION ☐ RENOVATION
☐ SHELL/CORE ☐ ADDITION

2018 NC EXISTING BUILDING CODE: ☐ PRESCRIPTIVE ☐ REPAIR ☐ CHAPTER 14
ALTERATION: ☐ LEVEL I ☐ LEVEL II ☐ LEVEL III
☐ HISTORIC ☐ CHANGE OF USE

CONSTRUCTED N/A CURRENT OCCUPANCY (CHAPTER 3) N/A
RENOVATED N/A PROPOSED OCCUPANCY (CHAPTER 3) N/A
OCCUPANCY CATEGORY: (TABLE 1604.5) CURRENT: ☐ I ☐ II ☐ III ☐ IV
PROPOSED: ☐ I ☐ II ☐ III ☐ IV

BASIC BUILDING DATA
CONSTRUCTION TYPE: ☐ I-A ☐ II-A ☐ III-A ☐ IV ☐ V-A
☐ I-B ■ II-B ☐ III-B ☐ V-B

SPRINKLERS: ☐ N/A ☐ YES ■ NO ☐ PARTIAL
■ N/A ☐ NFPA 13 ☐ NFPA 13R ☐ NFPA 13 D

STANDPIPES: ■ NO ☐ CLASS 1 WET ☐ CLASS 1 DRY ☐ CLASS II WET ☐ CLASS II DRY
☐ CLASS III WET ☐ CLASS III DRY

FIRE DISTRICT: ■ NO ☐ YES FLOOD HAZARD AREA: ■ NO ☐ YES
SPECIAL INSPECTIONS REQUIRED: ☐ NO ■ YES

GROSS BUILDING AREA TABLE:

FLOOR	EXISTING (SQ FT)	NEW (SQ FT)	SUB-TOTAL
6TH FLOOR	N/A	N/A	N/A
5TH FLOOR	N/A	N/A	N/A
4TH FLOOR	N/A	N/A	N/A
3RD FLOOR	N/A	N/A	N/A
2ND FLOOR	N/A	N/A	N/A
MEZZANINE	N/A	N/A	N/A
1ST FLOOR	N/A	3,168	3,168
BASEMENT	N/A	N/A	N/A
TOTAL			3,168

ALLOWABLE AREA
PRIMARY OCCUPANCY: ASSEMBLY ☐ A-1 ☐ A-2 ■ A-3 ☐ A-4 ☐ A-5
☐ BUSINESS ☐ EDUCATIONAL FACTORY ☐ F-1 MODERATE ☐ F-2 LOW
HAZARDOUS ☐ H-1 DETONATE ☐ H-2 DEFLAGRATE ☐ H-3 COMBUST ☐ H-4 HEALTH ☐ H-5 HPM
INSTITUTIONAL ☐ I-1 CONDITION 1 ☐ I-1 CONDITION 2 ☐ I-2 CONDITION 1 ☐ I-2 CONDITION 2
I-3 CONDITION ☐ 1 ☐ 2 ☐ 3 ☐ 4 ☐ 5 ☐ I-4
MERCANTILE ☐ RESIDENTIAL ☐ R-1 ☐ R-2 ☐ R-3 ☐ R-4
STORAGE ■ S-1 ☐ S-1 HIGH PILED ☐ S-2 ☐ S-2 HIGH-PILED ☐ STORAGE GARAGE OPEN
☐ UTILITY AND MISCELLANEOUS ☐ REPAIR GARAGE ☐ PARKING GARAGE ENCLOSED
ACCESSORY OCCUPANCY CLASSIFICATION: NA
INCIDENTAL USES: TABLE 509 NA
SPECIAL USES (CHAPTER 4 - LIST CODE SECTIONS): NA
SPECIAL PROVISIONS (CHAPTER 5 - LIST CODE SECTIONS): NA
MIXED OCCUPANCY: ☐ NO ■ YES SEPARATION: 0 EXCEPTION

ACTUAL AREA OF OCCUPANCY A / ALLOWABLE AREA OF OCCUPANCY A + ACTUAL AREA OF OCCUPANCY B / ALLOWABLE AREA OF OCCUPANCY B <_ 1

STORY NO.	DESCRIPTION AND USE	(A) BLDG AREA PER STORY (ACTUAL)	(B) TABLE 506.2 AREA	(C) AREA FOR FRONTAGE INCREASE	(D) AREA FOR SPRINKLER INCREASE	(E) ALLOWABLE AREA OR UNLIMITED	(F) MAXIMUM BUILDING AREA [4]
1	ASSEMBLY A-3	3,168	9,500	75%	0%	16,625	33,250

OCCUPANCY A-3 IS THE MOST RESTRICTIVE AND CONTROLS.

1. FRONTAGE AREA INCREASES FROM SECTION 506.2 ARE COMPUTED THUS:
   A. PERIMETER WHICH FRONTS A PUBLIC WAY OR OPEN SPACE HAVING 20 FEET MINIMUM WIDTH = 298 FT
   B. TOTAL BUILDING PERIMETER = 298 FT (P)
   C. RATIO (F/P) = 298 / 298 = 1 (F/P)
   D. W = MINIMUM WIDTH OF PUBLIC WAY = 30 T (W)
   E. PERCENT OF FRONTAGE INCREASE I = 100 [298 / 298 - 0.25] x 30/30 = 75 (%)
2. UNLIMITED AREA APPLICABLE UNDER CONDITIONS OF SECTION 507.
3. MAXIMUM BUILDING AREA = TOTAL NUMBER OF STORIES IN BUILDING X D (MAXIMUM 2 STORIES) (504.4)
4. THE MAXIMUM AREA OF PARKING GARAGES MUST COMPLY WITH TABLE 406.5.4.
5. FRONTAGE INCREASE IS BASED ON THE UNSPRINKLERED AREA VALUE IN TABLE 506.2.

ALLOWABLE HEIGHT

		ALLOWABLE	SHOWN ON PLANS	CODE REFERENCE [1]
BLDG HEIGHT IN FEET	TABLE 504.3 [2]	55	16'	TABLE 504.3
BLDG HEIGHT IN STORIES	TABLE 504.4 [3]	2	1	TABLE 504.4

[1] PROVIDE CODE REFERENCE IF THE "SHOWN ON PLANS" QUANTITY IS NOT BASED ON TABLE 504.3 OR 504.4.
[2] THE MAXIMUM HEIGHT OF AIR TRAFFIC CONTROL TOWERS MUST COMPLY WITH TABLE 412.3.1.
[3] THE MAXIMUM HEIGHT OF OPEN PARKING GARAGES MUST COMPLY WITH TABLE 406.5.4.

FIRE PROTECTION REQUIREMENTS

BUILDING ELEMENT	FIRE SEPARATION DISTANCE (FEET)	RATING REQ'D	RATING PROVIDED (W/____* REDUCTION)	DETAIL # AND SHEET #	DESIGN # FOR RATED ASSEMBLIES	DESIGN # FOR RATED PENETRATION	DESIGN # FOR RATED JOINTS
STRUCTURAL FRAME, INCL. COLUMNS, GIRDERS, TRUSSES	OVER 30'	0	0				
BEARING WALLS							
EXTERIOR							
NORTH	OVER 30'	0	0				
EAST	OVER 30'	0	0				
WEST	OVER 30'	0	0				
SOUTH	OVER 30'	0	0				
INTERIOR							
NON-BEARING WALLS & PARTITIONS							
EXTERIOR		N/A					
NORTH	OVER 30'	N/A					
EAST	OVER 30'	N/A					
WEST	OVER 30'	N/A					
SOUTH	OVER 30'	N/A					
INTERIOR WALLS & PARTITIONS	N/A	N/A	N/A				
FLOOR CONSTRUCTION INCLUDING SUPPORTING BEAMS AND JOISTS		N/A	0				
FLOOR CEILING ASSEMBLY		0	0				
COLUMNS SUPPORTING FLOORS		0	0				
ROOF CONSTRUCTION INCLUDING SUPPORTING BEAMS AND JOISTS		N/A	0				
ROOF CEILING ASSEMBLY		N/A	0				
COLUMNS SUPPORTING ROOF		N/A	0				
SHAFT ENCLOSURES - EXIT		N/A	0				
SHAFT ENCLOSURES - OTHER		N/A	0				
CORRIDOR SEPARATION		N/A	0				
OCCUPANCY/FIRE BARRIER SEPARATION		N/A	0				
PARTY/FIRE WALL SEPARATION		N/A	0				
SMOKE BARRIER SEPARATION		N/A	0				
SMOKE PARTITION		N/A	0				
TENANT/DWELLING UNIT/SLEEPING UNIT SEPARATION		N/A	0				
INCIDENTAL USE SEPARATION		N/A	0				

* INDICATE SECTION NUMBER PERMITTING REDUCTION

PERCENTAGE OF WALL OPENING CALCULATIONS

FIRE SEP DISTANCE (FEET) FROM PROPERTY LINES	DEGREE OF OPENINGS PROTECTION (TABLE 705.8)	ALLOWABLE AREA (%)	ACTUAL SHOWN ON PLANS (%)
OVER 30'	NO LIMIT		

LIFE SAFETY SYSTEM REQUIREMENTS
EMERGENCY LIGHTING: ■ NO ☐ YES
EXIT SIGNS: ■ NO ☐ YES
FIRE ALARM: ■ NO ☐ YES
SMOKE DETECTION SYSTEMS: ■ NO ☐ YES ☐ PARTIAL
CARBON MONOXIDE DETECTION: ■ NO ☐ YES

LIFE SAFETY PLAN REQUIREMENTS
LIFE SAFETY PLAN SHEET # NONE PROVIDED - **ALL DOORS OPEN DIRECTLY TO THE EXTERIOR - SEE ES-A101**

☐ FIRE AND/OR SMOKE WALL LOCATIONS (CHAPTER 7) **N/A**
☐ ASSUMED AND REAL PROPERTY LINE LOCATIONS (IF NOT ON THE SITE PLAN) **N/A**
☐ EXTERIOR WALL OPENING AREA WITH RESPECT TO DISTANCE TO ASSUMED PROPERTY LINES (705.8) **N/A**
☐ OCCUPANCY USE FOR EACH AREA AS IT RELATES TO OCCUPANT LOAD CALCULATIONS (TABLE 1004.1.2) **N/A**
☐ OCCUPANT LOADS FOR EACH AREA **N/A**
☐ EXIT ACCESS TRAVEL DISTANCES (1017) **N/A**
☐ COMMON PATH OF TRAVEL DISTANCES (TABLES 1006.2.1 & 1006.3.2(1)) **N/A**
☐ DEAD END LENGTHS (1020.4) **N/A**
☐ CLEAR EXIT WIDTHS FOR EACH EXIT DOOR **N/A**
☐ MAXIMUM CALCULATED OCCUPANT LOAD CAPACITY EACH EXIT DOOR CAN ACCOMMODATE BASED ON EGRESS WIDTH (1005.3) **N/A**
☐ ACTUAL OCCUPANT LOAD FOR EACH EXIT DOOR **N/A**
☐ A SEPARATE SCHEMATIC PLAN INDICATING WHERE FIRE RATED FLOOR/CEILING AND /OR ROOF STRUCTURE IS PROVIDED FOR OCCUPANCY SEPARATION **N/A**
☐ LOCATION OF DOORS WITH PANIC HARDWARE (1010.1.10) **N/A**
☐ LOCATION OF DOORS WITH DELAYED EGRESS LOCKS AND THE AMOUNT OF DELAY (1010.1.9.7) **N/A**
☐ LOCATION OF DOORS WITH ELECTROMAGNETIC EGRESS LOCKS (1010.1.9.9) **N/A**
☐ LOCATION OF DOORS EQUIPPED WITH HOLD OPEN DEVICES **N/A**
☐ LOCATION OF EMERGENCY ESCAPE WINDOWS (1030) **N/A**
☐ THE SQUARE FOOTAGE OF EACH FIRE AREA (202) **N/A**
☐ THE SQUARE FOOTAGE OF EACH SMOKE COMPARTMENT FOR OCCUPANCY CLASSIFICATION I-2 (407.5) **N/A**
☐ NOTE ANY CODE EXCEPTIONS OR TABLE NOTES THAT MAY HAVE BEEN UTILIZED REGARDING THE ITEMS ABOVE **NONE**

ACCESSIBLE DWELLING UNITS (SECTION 1107)
N/A

TOTAL UNITS	ACCESSIBLE UNITS REQUIRED	ACCESSIBLE UNITS PROVIDED	TYPE A UNITS REQUIRED	TYPE A UNITS PROVIDED	TYPE B UNITS REQUIRED	TYPE B UNITS REQUIRED	TOTAL - ACCESSIBLE UNITS PROVIDED

ACCESSIBLE PARKING (SECTION 1106) - SEE COVER SHEET OF EASTERN PARCEL SITE DRAWING SET.

LOT OR PARKING AREA	TOTAL # PARKING REQUIRED	TOTAL # PARKING PROVIDED	# OF ACCESSIBLE SPACES PROVIDED: REGULAR W/ 5' ACCESS AISLE	VAN SPACE WITH 132" ACC. AISLE	VAN SPACE WITH 8' ACC. AISLE	TOTAL # ACCESSIBLE UNITS PROVIDED
PARK CENTER	24	103 STANDARD SPACES	8 ACCESSIBLE SPACES		2	10 ACCESSIBLE SPACES
MAINTENANCE FAC.	6					
PICNIC SHELTER	8					
PLAYGROUND	34					
BOATING	4					
FISHING	4					
TOTAL	80	103	8		2	10

PARKING SPACES LISTED HERE INCLUDES ALL STANDARD VEHICLE SPACES REQUIRED AND PROVIDED FOR THE EASTERN PARCEL. SEE SHEET COVERSHEET OF EASTERN PARCEL SITE DRAWING SET FOR ADDITIONAL PARKING INFO.

PLUMBING FIXTURE REQUIREMENTS (TABLE 2902.1) EASTERN SHELTER ONLY

USE	WATER CLOSETS MALE	WATER CLOSETS FEMALE	WATER CLOSETS UNISEX	URINALS	LAVATORIES MALE	LAVATORIES FEMALE	LAVATORIES UNISEX	SHOWERS & TUBS MALE	SHOWERS & TUBS FEMALE	DRINKING FOUNTAINS REGULAR	DRINKING FOUNTAINS ACCESSIBLE
PICNIC AREA	.67	1.29			.43	.43					
REQUIRED	1	2	0	0	1	1	0	0	0	1	1
PROVIDED	2	2	4*	0	2	2	4*	0	0	1	1

*4 UNISEX TOILET ROOMS ARE PROVIDED IN LIEU OF SEPARATE FACILITIES. 2 ARE FULLY ACCESSIBLE.

SPECIAL APPROVALS
LOCAL JURISDICTION, DEPARTMENT OF INSURANCE, OSC, DPI, DHHS, ETC., DESCRIBE BELOW.

ENERGY SUMMARY
ENERGY REQUIREMENTS:

THE FOLLOWING DATA SHALL BE CONSIDERED MINIMUM AND ANY SPECIAL ATTRIBUTE REQUIRED TO MEET THE ENERGY CODE SHALL ALSO BE PROVIDED. EACH DESIGNER SHALL FURNISH THE REQUIRED PORTIONS OF THE PROJECT INFORMATION FOR THE PLAN DATA SHEET. IF PERFORMANCE METHOD, STATE THE ANNUAL ENERGY COST FOR THE STANDARD REFERENCE DESIGN VS. ANNUAL ENERGY FOR THE PROPOSED DESIGN.

EXISTING BUILDING ENVELOPE COMPLIES WITH CODE: ☐ YES (REMAINDER OF THIS SECTION IS NOT APPLICABLE) ☐ NO
EXEMPT BUILDING: ☐ YES ■ NO PROVIDE CODE OR STATUTORY REFERENCE:
CLIMATE ZONE: ☐ N/A ☐ 3A ■ 4A ☐ 5A
METHOD COMPLIANCE: ☐ ENERGY CODE PERFORMANCE ■ ENERGY CODE PRESCRIPTIVE ☐ OTHER - PERFORMANCE
☐ ASHRAE 90.1 PERFORMANCE ☐ ASHRAE 90.1 PRESCRIPTIVE ☐
(IF "OTHER" SPECIFY SOURCE HERE)

THERMAL ENVELOPE (PRESCRIPTIVE METHOD ONLY)
ROOF/CEILING ASSEMBLY - STANDING SEAM
DESCRIPTION OF ASSEMBLY: SEE ES-421 THROUGH ES-423: STANDING SEAM ROOF / MIN. R-30 CONTINUOUS RIGID INSULATION / NOMINAL 2" WOOD DECK
U-VALUE OF TOTAL ASSEMBLY: U-0.02
R-VALUE OF INSULATION: MIN. R-30 CONTINUOUS INSULATION, R-43 SHOWN IN DETAILS
SKYLIGHTS IN EACH ASSEMBLY: N/A
U-VALUE OF SKYLIGHT: N/A
SKYLIGHTS AREA IN EACH ASSEMBLY: N/A

EXTERIOR WALLS - FIBER CEMENT CLADDING
DESCRIPTION OF ASSEMBLY: SEE ES-421 THROUGH ES-423:- 8" CMU / AIR-WEATHER BARRIER / MIN. R-10 CONT. RIGID INSULATION / AIRSPACE / FIBER CEMENT CLADDING
U-VALUE OF TOTAL ASSEMBLY: U-0.05
R-VALUE OF INSULATION: R-10 CONTINUOUS INSULATION, R-15 SHOWN IN DETAILS
OPENINGS (WINDOWS & DOORS):
U-VALUE OF ASSEMBLY: U-0.45
SOLAR HEAT GAIN COEF: 0.25
PROJECTION FACTOR: 0.00
DOOR R-VALUES: HOLLOW METAL - R-2.0

WALLS ADJACENT TO UNCONDITIONED SPACE (EACH ASSEMBLY):
DESCRIPTION OF ASSEMBLY: N/A
U-VALUE OF TOTAL ASSEMBLY:
R-VALUE OF INSULATION:
OPENINGS (WINDOWS & DOORS):
U-VALUE OF ASSEMBLY: N/A
SOLAR HEAT GAIN COEF:
PROJECTION FACTOR:
DOOR R-VALUES:

WALLS BELOW GRADE:
DESCRIPTION OF ASSEMBLY: N/A
U-VALUE OF TOTAL ASSEMBLY:
R-VALUE OF INSULATION:

FLOORS - UNCONDITIONED:
DESCRIPTION OF ASSEMBLY: N/A
U-VALUE OF TOTAL ASSEMBLY:
R-VALUE OF INSULATION:

FLOOR SLAB ON GRADE:
DESCRIPTION OF ASSEMBLY: SEE ES-421 THROUGH ES-423: 4" OR 6" CONCRETE ON A VAPOR BARRIER ON DRAINAGE STONE ON GRADE
U-VALUE OF TOTAL ASSEMBLY:
R-VALUE OF INSULATION: R-15 CONTINUOUS INSULATION
HORIZONTAL/VERTICAL REQMT: VERTICAL TO TOP OF FOOTING AT WALLS / 2'-0" HORIZONTAL AT ENTRANCES AND DOORS
SLAB HEATED: N/A

STRUCTURAL DESIGN
DESIGN LOADS:
IMPORTANCE FACTORS: SNOW (Is): ☐ 0.8 ■ 1.0 ☐ 1.1 ☐ 1.2
SEISMIC (Is): ■ 1.0 ☐ 1.25 ☐ 1.5
LIVE LOADS: ROOF 20 PSF
MEZZANINE N/A PSF
FLOOR 100 PSF
GROUND SNOW LOAD: 15 PSF
WIND LOAD: ULTIMATE WIND SPEED 116 MPH (ASCE-7)
EXPOSURE CATEGORY ☐ N/A ■ B ☐ C ☐ D

SEISMIC DESIGN CATEGORY: ☐ N/A ■ A ☐ B ☐ C ☐ D
PROVIDE THE FOLLOWING SEISMIC PARAMETERS:
RISK FACTOR (TABLE 1604.5): ☐ N/A ☐ I ■ II ☐ III ☐ IV
SPECIAL RESPONSE ACCELERATION: Ss 11.2 %g S1 5.7 %g

SITE CLASSIFICATION (ASCE 7): ☐ N/A ☐ A ☐ B ■ C ☐ D ☐ E ☐ F
DATA SOURCE: ☐ N/A ■ FIELD TEST ☐ PRESUMPTIVE ☐ HISTORICAL DATA
BASIC STRUCTURAL SYSTEM: ☐ N/A ■ BEARING WALL ☐ BLDG FRAME ■ MOMENT FRAME
☐ DUAL W/ SPECIAL MOMENT FRAME ☐ INVERTED PENDULUM
☐ DUAL W/ INTERMEDIATE R/C OR SPECIAL STEEL
ANALYSIS PROCEDURE: ☐ N/A ☐ SIMPLIFIED ■ EQUIVALENT LATERAL FORCE ☐ DYNAMIC
ARCHITECTURAL, MECHANICAL, COMPONENTS ANCHORED: ☐ N/A ☐ YES ■ NO
LATERAL DESIGN CONTROL: ☐ N/A ☐ EARTHQUAKE ■ WIND
SOIL BEARING CAPACITIES: 2,500 PSF

PILE SIZE, TYPE & CAPACITY N/A

MECHANICAL DESIGN
SEE MECHANICAL DRAWINGS
MECHANICAL SUMMARY: MECHANICAL SYSTEMS, SERVICE SYSTEMS AND EQUIPMENT
METHOD OF COMPLIANCE: ■ PERSCRIPTIVE ☐ ENERGY COST BUDGET

THERMAL ZONE: 4A WINTER DRY BULB: 19.7 DEGREES F
SUMMER DRY BULB: 95 DEGREES F

INTERIOR DESIGN COND: WINTER DRY BULB: 40 DEGREES F
SUMMER DRY BULB: N/A
RELATIVE HUMIDITY: N/A

BUILDING HEATING LOAD: 7.46 MBH
BUILDING COOLING LOAD: N/A

MECHANICAL SPACING CONDITIONING SYSTEM
UNITARY:
DESCRIPTION OF UNIT: FREEZE PROTECTION ONLY W/ ELECTRIC UNIT HEATERS
HEATING EFFICIENCY: SEE SCHEDULES ON M SHEETS
COOLING EFFICIENCY: SEE SCHEDULES ON M SHEETS
SIZE CATEGORY OF UNIT: SEE SCHEDULES ON M SHEETS
BOILER: SIZE CATEGORY: N/A
IF OVERSIZED STATE REASON
CHILLER: SIZE CATEGORY: N/A
IF OVERSIZED STATE REASON
LIST EQUIPMENT EFFICIENCIES: SEE M SHEETS

ELECTRICAL DESIGN
SEE ELECTRICAL DRAWINGS
ELECTRICAL SYSTEMS AND EQUIPMENT

METHOD OF COMPLIANCE: ☐ ENERGY CODE PERFORMANCE ■ ENERGY CODE PRESCRIPTIVE ☐ N/A
☐ ASHRAE 90.1 PERFORMANCE ☐ ASHRAE 90.1 PRESCRIPTIVE

LIGHTING SCHEDULE:

LAMP TYPE REQUIRED IN FIXTURE	SEE FIXTURE SCHEDULE ON E SHEETS
NUMBER OF LAMPS IN FIXTURE	SEE FIXTURE SCHEDULE ON E SHEETS
BALLAST TYPE USED IN THE FIXTURE	SEE SPECIFICATIONS
NUMBER OF BALLASTS IN THE FIXTURE	SEE SPECIFICATIONS
TOTAL WATTAGE PER FIXTURE	VARIES - SEE FIXTURE SCHEDULE ON E SHEETS
TOTAL INTERIOR WATTAGE SPECIFIED VS. ALLOWED (WHOLE BUILDING OR SPACE BY SPACE)	309 WATTS VS. 437 WATTS (WHOLE BUILDING)
TOTAL EXTERIOR WATTAGE SPECIFIED VS. ALLOWED	314 WATTS VS 1747 WATTS

ADDITIONAL EFFICIENCY PACKAGE OPTIONS: (WHEN USING 2018 NCECC; NOT REQUIRED FOR ASHRAE 90.1)
☐ C406.2 MORE EFFICIENT HVAC EQUIPMENT PERFORMANCE
■ C406.3 REDUCED LIGHTING POWER DENSITY
☐ C406.4 ENHANCED DIGITAL LIGHTING CONTROLS
☐ C406.5 ON-SITE RENEWABLE ENERGY
☐ C406.6 DEDICATED OUTDOOR AIR SYSTEM
☐ C406.7 REDUCED ENERGY USE IN SERVICE WATER HEATING

Susan Hatchell Landscape Architecture, PLLC
711 W. North Street, Raleigh, NC 27603
p: 919-838-9600 f: 919-838-9700

Esse Architects
632 PERSHING ROAD | RALEIGH, NORTH CAROLINA 27608

CODE SUMMARY

LAKE MYRA COUNTY PARK
Wake County, NC

Esse Architects P.A. Registered Architectural Corporation 52498 North Carolina Raleigh, NC

MIRANDA DONNER POTTHOFF Registered Architect 11663 Licensed to Practice North Carolina Raleigh, NC
Miranda Potthoff
7/27/2026

REVISIONS

Date: 07/27/26

ES-G101

Docusign Envelope ID: B01E90F4-17F4-81DC-8054-9D51919BF271

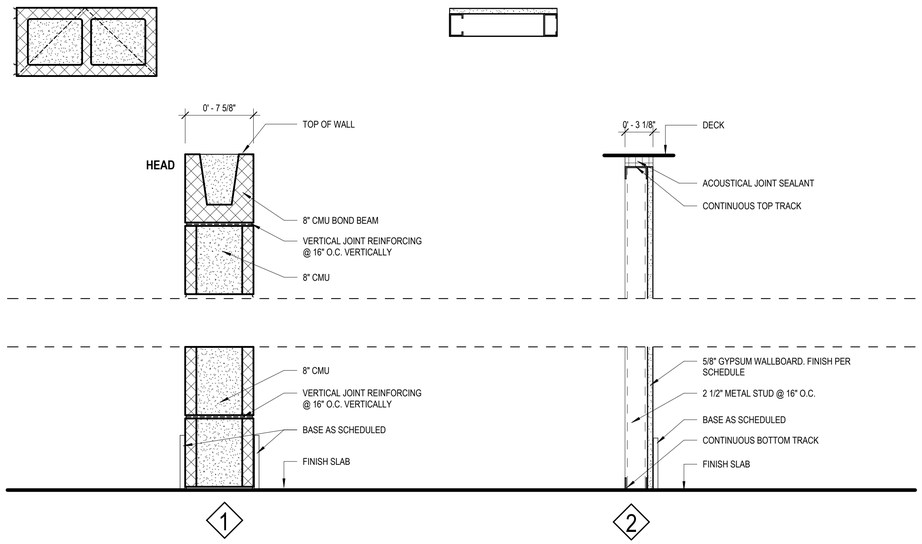

8" CMU INTERIOR PARTITION

2 1/2" METAL STUD PARTITION, 5/8" GWB. ONE SIDE

SYMBOL LEGEND	
#	PARTITION TAG

GENERAL PARTITION NOTES

1. COORDINATE ADJACENT WALLS OF DIFFERENT TYPES SO THAT GYP. BOARD WALL FACES ALIGN. RESILIENT CHANNELS TO BE ON THE SAME SIDE OF THE WALL, TYP.
2. SEAL PERIMETER OF ALL WALLS, TYP.
   USE 5/8" CEMENTITIOUS TILE BACKING SHEETS IN LIEU OF 5/8" GWB BEHIND ALL WALL TILE; TYP.
3. SEE FINISH SCHEDULE AND FINISH PLANS FOR WALL TILE AND WALL FINISHES.

Susan Hatchell
Landscape Architecture, PLLC
711 W. North Street, Raleigh, NC 27603
p: 919-838-9600 f: 919-838-9700

Esse Architects
632 PERSHING ROAD | RALEIGH, NORTH CAROLINA 27608

PARTITIONS

LAKE MYRA COUNTY PARK
Wake County, NC

Esse Architects P.A.
Registered Architectural Corporation
52498
North Carolina
Raleigh, NC

MIRANDA DOWNER POTTHOFF
Registered Architect
11663
Miranda Potthoff
North Carolina
Raleigh, NC
7/27/2026

REVISIONS

Date: 07/27/26

ES-A001

Docusign Envelope ID: B01E90F4-17F4-81DC-8054-9D51919BF271

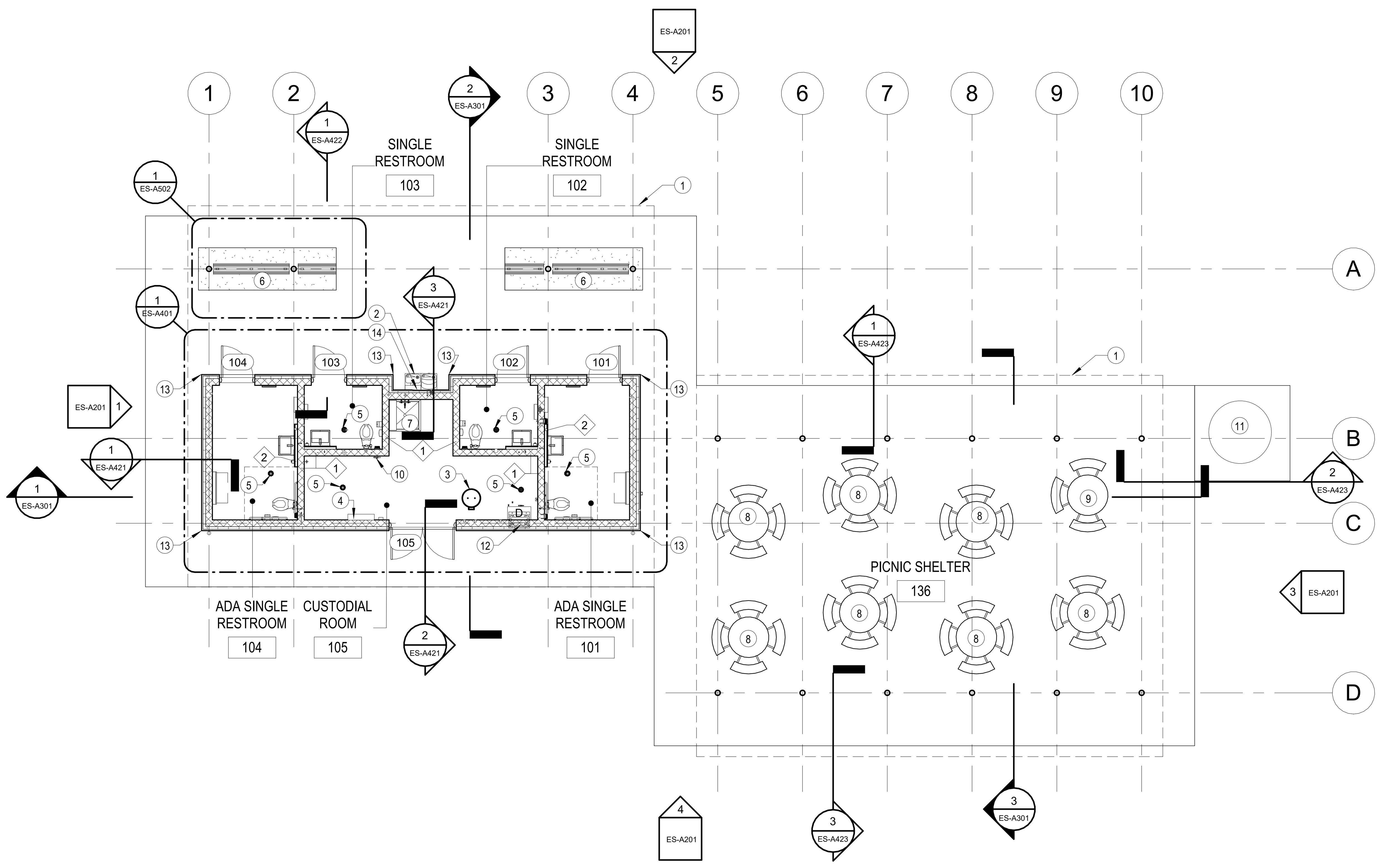

1 ES-A101 EAST PARCEL SHELTER - FLOOR PLAN
1/8" = 1'-0"

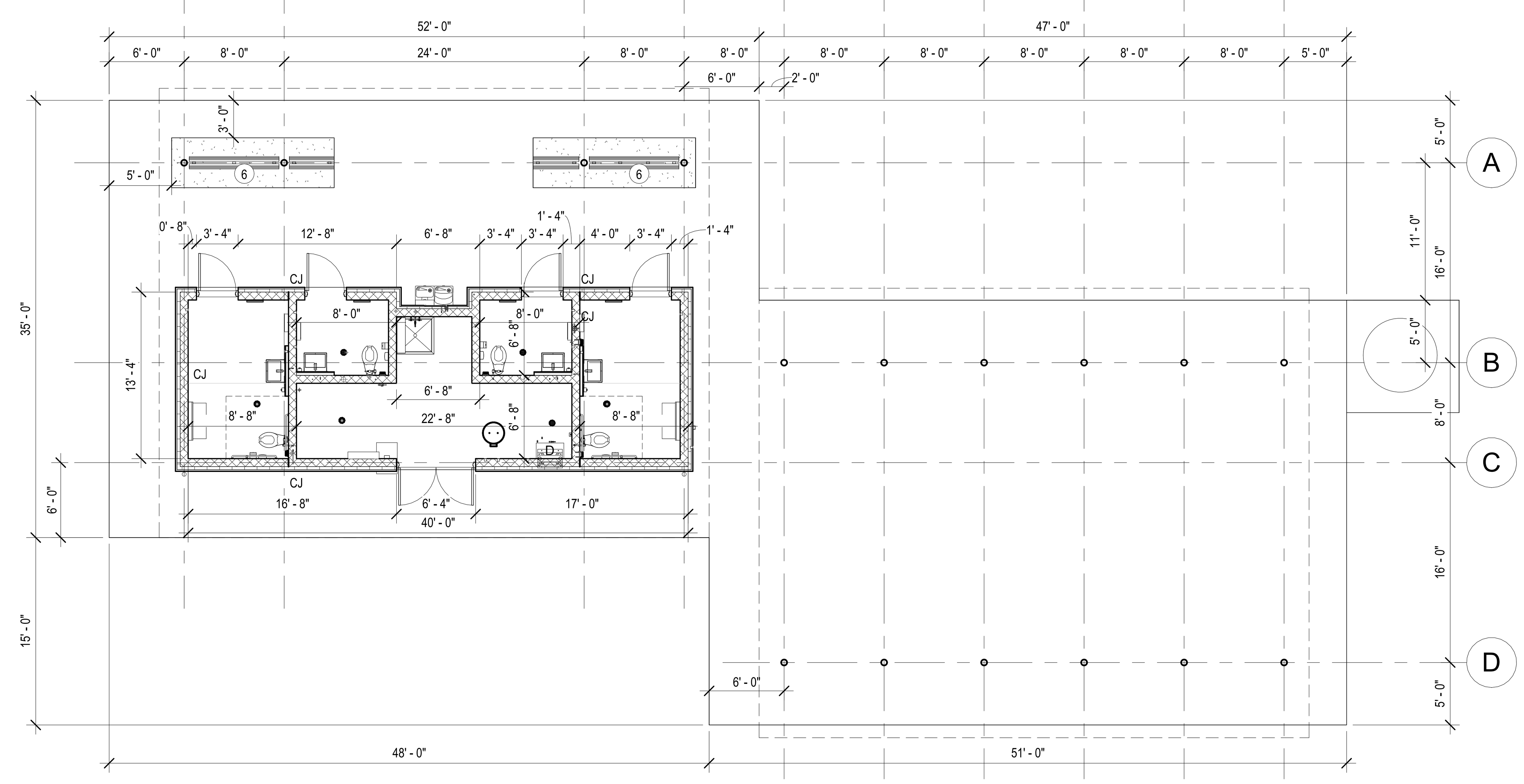

2 ES-A101 EAST PARCEL SHELTER - DIMENSIONED FLOOR PLAN
1/8" = 1'-0"

GENERAL KEY NOTES

KEY	DESCRIPTION
1	ROOF OVERHANG ABOVE
2	DRINKING FOUNTAIN - SEE PLUMBING DRAWINGS
3	WATER HEATER - SEE PLUMBING DRAWINGS
4	PANEL BOARD - SEE ELECTRICAL DRAWINGS
5	FLOOR DRAIN - SEE PLUMBING DRAWINGS
6	CAST-IN-PLACE BENCH WITH WOOD BACKING
7	MOP SINK WITH STAINLESS STEEL PROTECTION PANEL - SEE PLUMBING DRAWINGS
8	PICNIC TABLES - SEE SITE/CIVIL DRAWINGS
9	ACCESSIBLE PICNIC TABLE - SEE SITE/CIVIL DRAWINGS
10	WALL-MOUNTED FIRE EXTINGUISHER
11	CISTERN ON CONCRETE PAD - SEE SITE DRAWINGS
12	DATA RACK - SEE ELECTRICAL DRAWINGS
13	CONTINUOUS POWDER COATED VERTICAL ALUMINUM CORNER TRIM
14	KIOSK SIGNAGE ABOVE DRINKING FOUNTAIN - OWNER PROVIDED AND OWNER INSTALLED

WALL LEGEND

UNRATED CMU CONSTRUCTION

PARTITION TAG

NOTES

1. ALL MASONRY WALL DIMENSIONS ARE TO FACE OF BLOCK.
2. SEE DIMENSION PLAN FOR BUILDING SLAB CONTROL JOINT LOCATIONS DEPICTED BY HALFTONE LINES AND **CJ**.
3. SEE DIMENSION PLAN FOR WALL CONTROL JOINT LOCATIONS DEPICTED BY DARK LINES AND **CJ**.
4. FINISH WALL TO FLOOR FOR BASE ADHESION.
5. SEE ENLARGED PLANS FOR ADDITIONAL DETAIL LOCATIONS.

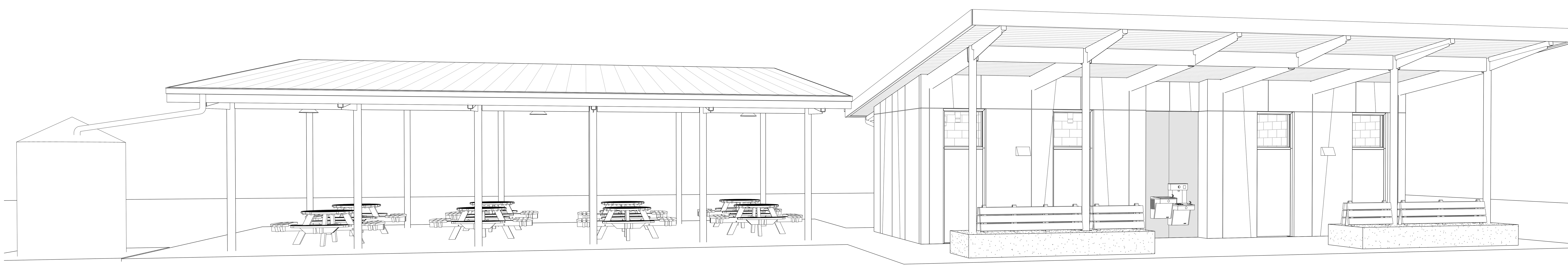

3 ES-A101 EAST PARCEL SHELTER

Susan Hatchell
Landscape Architecture, PLLC
711 W. North Street, Raleigh, NC 27603
p: 919-838-9600 f: 919-838-9700

Esse Architects
832 PERSHING ROAD | RALEIGH, NORTH CAROLINA 27608

FLOOR PLANS

LAKE MYRA COUNTY PARK
Wake County, NC

REVISIONS

Esse Architects P.A. Registered Architectural Corporation 52498 North Carolina Raleigh, NC

MIRANDA DOWNER POTTHOFF Registered Architect 11663 North Carolina Raleigh, NC 7/27/2026

Date: 07/27/26

ES-A101

Docusign Envelope ID: B01E90F4-17F4-81DC-8054-9D51919BF271

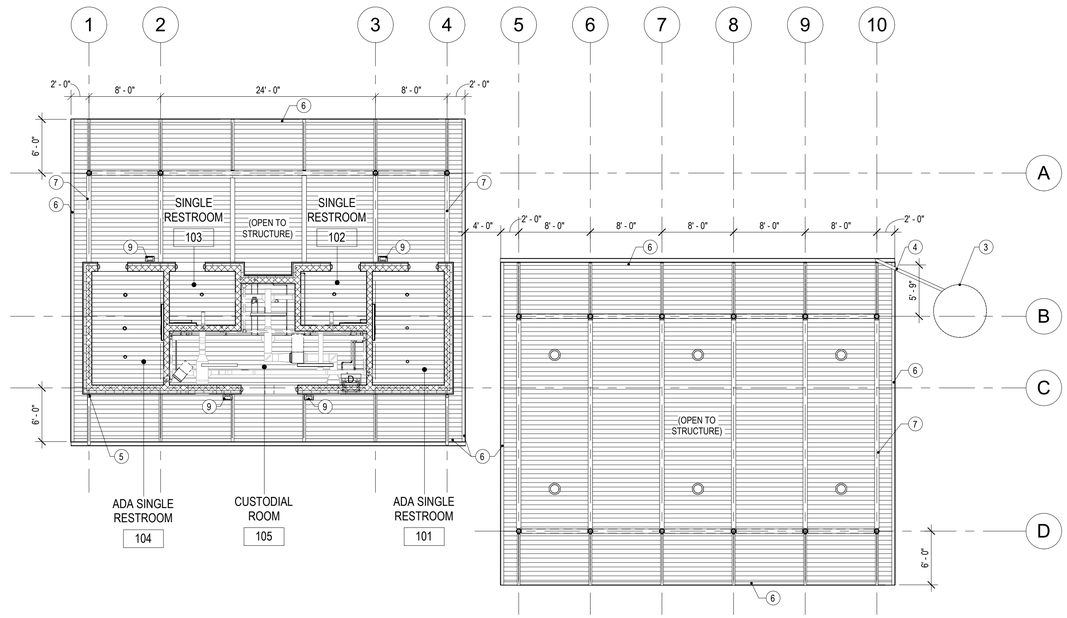

1 ES-A111 EAST PARCEL SHELTER - REFLECTED CEILING PLAN
1/8" = 1'-0"

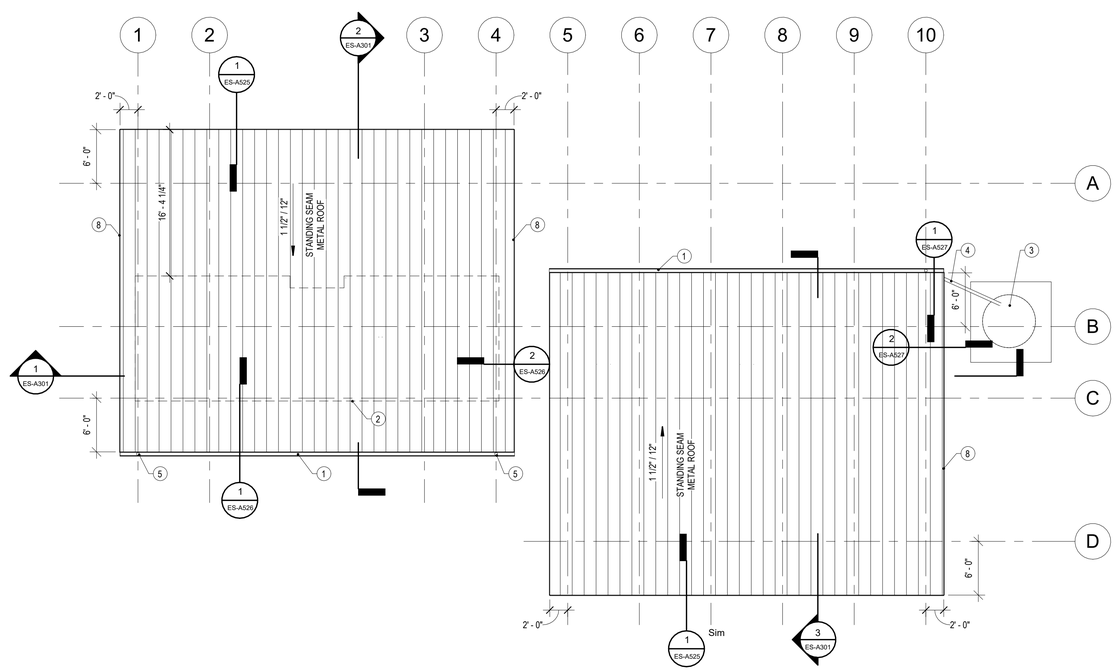

2 ES-A111 EAST PARCEL SHELTER - ROOF PLAN
1/8" = 1'-0"

CEILING LEGEND

CEILING TYPE — A | 10'-0" — CEILING HEIGHT

PATTERN	KEY	CEILING MATERIAL
	A	EXPOSED 2x WOOD DECKING W/ THREE COATS OF CLEAR SEALER

SYMBOL	DESCRIPTION
	SUSPENDED LINEAR FIXTURE
	SUSPENDED LIGHT FIXTURE
	SUSPENDED 15" LIGHT FIXTURE
	WALL RECTANGULAR LIGHT

CEILING NOTES:

1. SEE ELECTRICAL AND MECHANICAL PLANS FOR MORE INFORMATION.
2. WHERE CEILING KEYNOTE IS NOT NOTED, ROOM HAS EXPOSED STRUCTURE.
3. ALL DIMENSIONS ARE TO CENTERLINE OF FIXTURE UNLESS OTHERWISE NOTED.
4. ALL EXTERIOR SUSPENDED LIGHTS TO BE MOUNTED W/ EQUAL CORD LENGTH - SEE ELECTRICAL DRAWINGS

ROOF PLAN LEGEND

2" TALL STANDING SEAM METAL ROOF WITH 16" WIDE PANELS W/ PENCIL RIBS AND ICE AND WATER SHIELD UNDER FULL ROOF AREA

1 1/2" / 12" SLOPE

ROOF PLAN NOTES

1. STRUCTURAL WOOD ROOF DECK IS ALSO FINISHED CEILING - NO FASTENERS SHALL PENETRATE DECKING
2. NO EXPOSED CONDUIT SHALL BE RUN ACROSS UNDERSIDE OF WOOD DECKING WITHOUT REVIEW AND COORDINATION WITH THE ARCHITECT. COORDINATE FOR LIGHTING, SECURITY, ETC.

GENERAL ROOF NOTES

KEY	DESCRIPTION
1	5"X5" ALUMINUM GUTTER
2	OUTSIDE FACE OF BLOCK BELOW
3	CISTERN - SEE SITE DRAWINGS
4	4" DIAMETER DOWNSPOUT TO CISTERN - SEE SITE DRAWINGS
5	4" DIAMETER DOWNSPOUT
6	STEEL BENT PLATE AROUND PERIMETER OF ROOF - SEE STRUCTURAL - PAINT PER SPEC 09 9600
7	STEEL BEAMS WITH HIGH PERFORMANCE COATING PER SPEC SECTION 09 9600
8	CONTINUOUS METAL FASCIA - FULL PERIMETER
9	EXTERIOR WALL MOUNTED LIGHT - SEE ELECTRICAL DRAWINGS

Susan Hatchell
Landscape Architecture, PLLC
711 W. North Street, Raleigh, NC 27603
p: 919-838-9600 f: 919-838-9700

Esse Architects
832 PERSHING ROAD | RALEIGH, NORTH CAROLINA 27608

REFLECTED CEILING AND ROOF PLANS

LAKE MYRA COUNTY PARK
Wake County, NC

Esse Architects P.A. Registered Architectural Corporation 52498 North Carolina Raleigh, NC

MIRANDA DOWNER POTTHOFF Registered Architect 11653 Miranda Potthoff North Carolina Raleigh, NC 7/27/2026

REVISIONS

Date: 07/27/26

ES-A111

Docusign Envelope ID: B01E90F4-17F4-81DC-8054-9D51919BF271

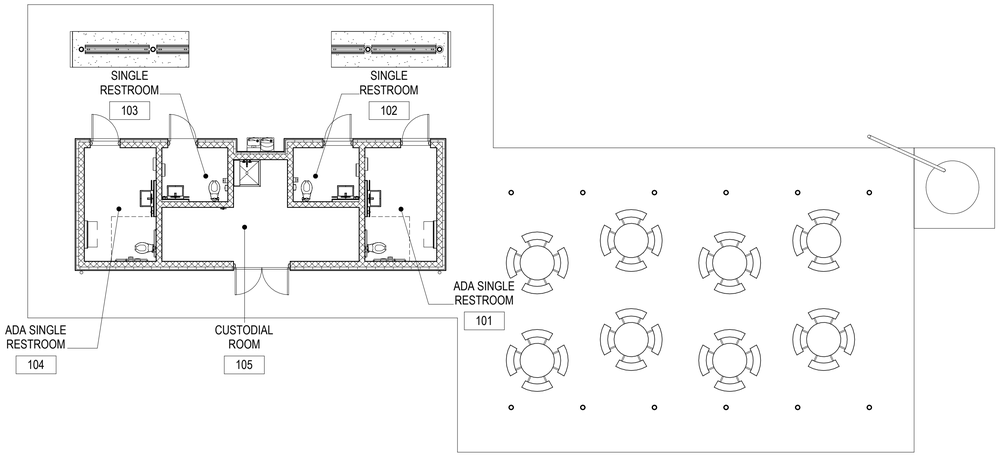

1 ES-A131 EAST PARCEL SHELTER - FINISH PLAN
1/8" = 1'-0"

NOTE: WALL FINISH LOCATIONS NOTED IN THE SCHEDULE ARE ORIENTED USING PLAN NORTH AS THE REFERENCE DIRECTION.

FINISH SCHEDULE

ROOM NUMBER	ROOM NAME	FLOOR		WALLS				CEILING	MILLWORK	
		FLOOR	BASE	NORTH	EAST	SOUTH	WEST		CABINETRY	COUNTERTOP
101	ADA SINGLE RESTROOM	EPX-1	EPX-1	PT-1	PT-1	PT-1	PT-1; WT-5	A	--	--
102	SINGLE RESTROOM	EPX-1	EPX-1	PT-1	PT-1	PT-1; WT-5	PT-1	A	--	--
103	SINGLE RESTROOM	EPX-1	EPX-1	PT-1	PT-1	PT-1; WT-5	PT-1	A	--	--
104	ADA SINGLE RESTROOM	EPX-1	EPX-1	PT-1	PT-1; WT-5	PT-1	PT-1	A	--	--
105	CUSTODIAL ROOM	EPX-1	EPX-1	PT-1	PT-1	PT-1	PT-1	A	--	--

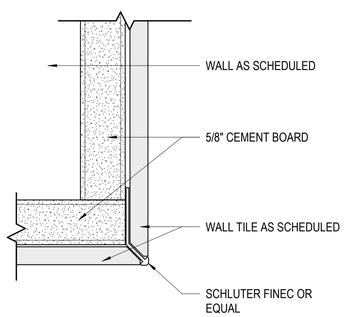

2 ES-A131 TYP. WALL TILE OUTSIDE CORNER
12" = 1'-0"

FINISH LEGEND

		BASIS OF DESIGN:	EQUAL 1:	EQUAL 2:
FLOORING				
096723.01	MANUFACTURER:	SHERWIN WILLIAMS	AMERICAN HI-TECH FLOORING COMPANY	EPOXY SYSTEMS, INC.
EPX-1 RESINOUS FLOORING	COLLECTION:	DECO QUARTZ	MATCH BOD	MATCH BOD
	COLOR:	GRASSLAND	MATCH BOD	MATCH BOD
	INSTALL METHOD:	POURED; 6" INTEGRAL COVE BASE	POURED; 6" INTEGRAL COVE BASE	POURED; 6" INTEGRAL COVE BASE
WALLS				
093013.07	MANUFACTURER:	MOSAIC	SPECIALTY TILE PRODUCTS	STONE SOURCE
WT-5 WALL TILE	COLLECTION:	EARTHEN	EARTH	FIRENZE BEPAINT
	COLOR:	JADE; MATTE	LEAF	MOSS
	TYPE/SIZE:	3" X 12"	2" X 8"	3" X 10"
	GROUT:	LATICRETE SPECTRALOCK: TBD	LATICRETE SPECTRALOCK: TBD	LATICRETE SPECTRALOCK: TBD
	INSTALL METHOD:	VARIES; SEE ELEVATIONS	VARIES; SEE ELEVATIONS	VARIES; SEE ELEVATIONS
PAINTS				
099123.01	MANUFACTURER	SHERWIN WILLIAMS	BENJAMIN MOORE	PPG
PT-1 FIELD	COLOR:	SW 6203 SPARE WHITE	MATCH BOD	MATCH BOD
	SHEEN:	EGGSHELL	EGGSHELL	EGGSHELL
099123.03	MANUFACTURER	SHERWIN WILLIAMS	BENJAMIN MOORE	PPG
PT-3 FIELD	COLOR:	SW 7048 URBANE BRONZE	MATCH BOD	MATCH BOD
	SHEEN:	EGGSHELL	EGGSHELL	EGGSHELL
099123.05	MANUFACTURER	SHERWIN WILLIAMS	BENJAMIN MOORE	PPG
PT-5 GREEN HM DOORS & TRIM	COLOR:	SW 6438 DILL	MATCH BOD	MATCH BOD
	SHEEN:	SEMI-GLOSS	SEMI-GLOSS	SEMI-GLOSS

SYMBOL LEGEND

X-X	FINISH TAG
TXT	ROLLER SHADE TAG
– – – – –	TILED WALL

GENERAL FINISH NOTES

1. ALL DIMENSIONS TO BE FIELD VERIFIED PRIOR TO ORDERING. DO NOT SCALE FROM DRAWINGS.
2. ALL MATERIALS SHALL BE INSTALLED PER MANUFACTURER'S RECOMMENDATIONS WITH APPROVED ADHESIVES OR OTHER FASTENERS.
3. IF THERE ARE QUESTIONS ABOUT THE DESIGN INTENT OF ANY PATTERN OR MATERIAL TO BE INSTALLED, THE G.C. SHALL SUBMIT A REQUEST FOR INFORMATION TO THE DESIGNER FOR CLARIFICATION PRIOR TO ORDERING THE MATERIALS.
4. THE G.C. SHALL PROVIDE ALL FINISHING PIECES AND TRANSITIONS WHERE DIFFERENT FLOORING THICKNESSES MEET, U.N.O. THE G.C. SHALL SUBMIT A SAMPLE OF THE COLOR/FINISH TO THE DESIGNER FOR APPROVAL.
5. ALL WALLS TO BE FIELD PAINT, **PT-1**, U.N.O. ALL GYP. BD. PARTITIONS TO RECEIVE A LEVEL 4 FINISH.
6. EXPOSED ADA THERMAL INSULATED KITS AT SINKS TO BE PAINTED TO WATCH ADJACENT WALL.
7. IN INTERIOR CONDITIONS, FLOORING TO TRANSITION UNDER CLOSED DOOR. FLOORING TO TRANSITION IN CENTER OF CASED OPENING WHEN NO DOOR IS SCHEDULED.
8. ALL COVER PLATES (DATA, LIGHTS, TELEPHONE, ETC.) AND ALL DEVICES TO COORDINATE WITH WAKE COUNTY STANDARDS.

Susan Hatchell
Landscape Architecture, PLLC
711 W. North Street, Raleigh, NC 27603
p: 919-838-9600 f: 919-838-9700

Esse Architects
832 PERSHING ROAD | RALEIGH, NORTH CAROLINA 27608

FINISH PLAN, LEGEND & SCHEDULE

LAKE MYRA COUNTY PARK
Wake County, NC

REVISIONS

Esse Architects P.A. Registered Architectural Corporation 52498 North Carolina Raleigh, NC

MIRANDA DONNER POTTHOFF Registered Architect 17663 Signature Miranda Potthoff North Carolina Raleigh, NC 7/27/2026

Date: 07/27/26

ES-A131

Docusign Envelope ID: B01E90F4-17F4-81DC-8054-9D51919BF271

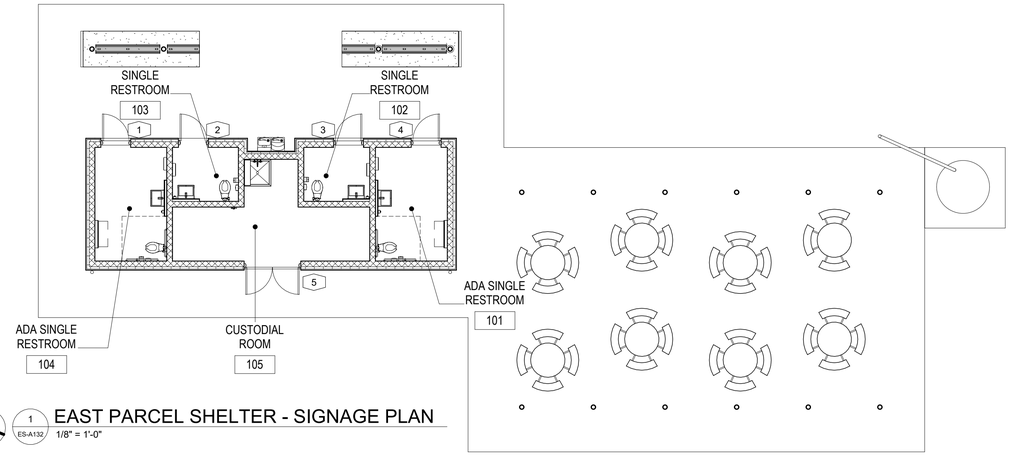

1 ES-A132 EAST PARCEL SHELTER - SIGNAGE PLAN
1/8" = 1'-0"

ALL BUILDING SIGNAGE TO BE PROVIDED BY THE OWNER UNLESS OTHERWISE NOTED.

# SIGNAGE SCHEDULE				
SIGN NO.	ROOM NO.	SIGNAGE TEXT	SIGN TYPE	COMMENTS
1	104	RESTROOM	R.3	
2	103	RESTROOM	R.5	
3	102	RESTROOM	R.5	
4	101	RESTROOM	R.3	
5	105	CUSTODIAL	ID.3	

SPECIFICATIONS

GENERAL SIGNAGE NOTES

BRAILLE CHARACTERS ARE FOR GRAPHIC REPRESENTATION ONLY - ACTUAL BRAILLE CHARACTERS TO BE DETERMINED BY SIGN FABRICATOR

ADA COMPLIANT 1/8" THERMOFORM SIGN CONSISTING OF INTEGRAL RAISED COPY, GRADE II BRAILLE WITH SUBSURFACE COPY AND PAINT, SIGN TO BE CLEARCOATED AFTER PAINT AND FOIL STAMP HAS BEEN APPLIED.

ROOM NUMBER, BRAILLE, AND ACCENTS ARE RAISED.

WHERE SIGN IS MOUNTED TO GLASS, PLACE A THERMOFORM BLANK SIGN MOUNTED ON OPPOSITE SIDE OF GLASS. BACK PANEL TO MATCH BACKGROUND COLOR.

COPY STYLE: OPTIMA MEDIUM

COPY COLOR: BLACK; ARCHITECT TO SELECT FROM MANUFACTURERS FULL LINE OF COLORS.

BACKGROUND COLOR: ROWMARK BLACK FOREST GREEN OR EQUAL; ARCHITECT TO SELECT FROM MANUFACTURERS FULL RANGE OF COLORS.

BRAILLE COLOR: CLEAR

SYMBOL COLOR: WHITE ; ARCHITECT TO SELECT FROM MANUFACTURERS FULL RANGE OF COLORS.

NOTE: ALL SIGN TYPES TO MEET ADA REQUIREMENTS FOR COLOR CONTRAST RATIO

CORNERS: SQUARE

SIGN MOUNTING: 3M #4910 CLEAR VHB DOUBLE-SIDED TAPE AND CLEAR SILICONE ADHESIVE

SIGNAGE TYPE R.3 - UNISEX ADA

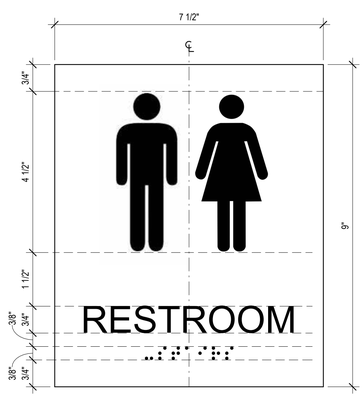

SIGNAGE TYPE R.5 - UNISEX NON-ADA

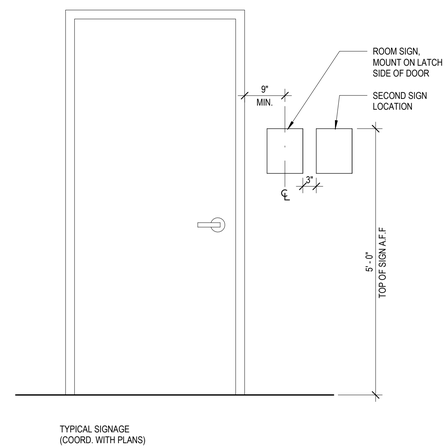

SIGNAGE MOUNTING HEIGHTS

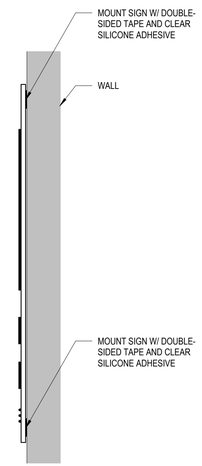

SIGNAGE MOUNTING TYPES

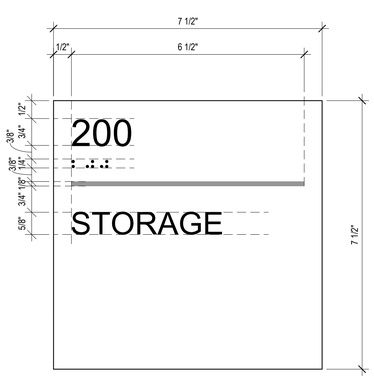

SIGNAGE TYPE ID.3 - ROOM INDICATOR VINYL TEXT

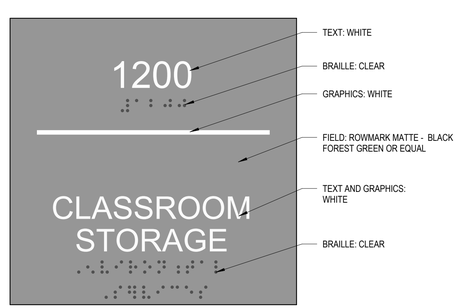

SIGNAGE COLOR SAMPLE

Susan Hatchell
Landscape Architecture, PLLC
711 W. North Street, Raleigh, NC 27603
p: 919-838-9600 f: 919-838-9700

Esse Architects
632 PERSHING ROAD | RALEIGH, NORTH CAROLINA 27608

SIGNAGE PLAN & DETAILS

LAKE MYRA COUNTY PARK
Wake County, NC

REVISIONS

Esse Architects P.A. Registered Architectural Corporation 52498 North Carolina Raleigh, NC

MIRANDA DOWNNER POTTHOFF Registered Architect 11663 North Carolina Raleigh, NC 7/27/2026

Date: 07/27/26

ES-A132

Docusign Envelope ID: B01E90F4-17F4-81DC-8054-9D51919BF271

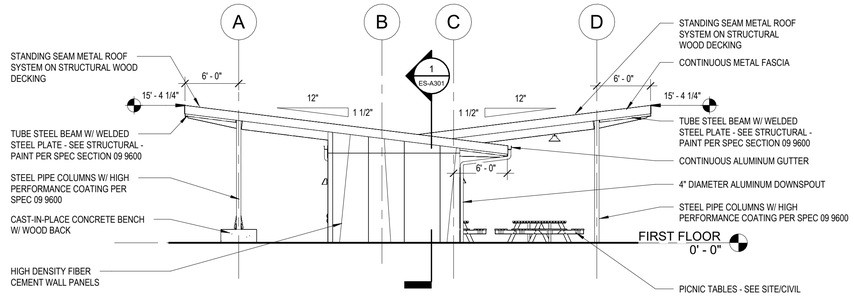

1 ES-A201 EAST PARCEL SHELTER - NORTH ELEVATION
1/8" = 1'-0"

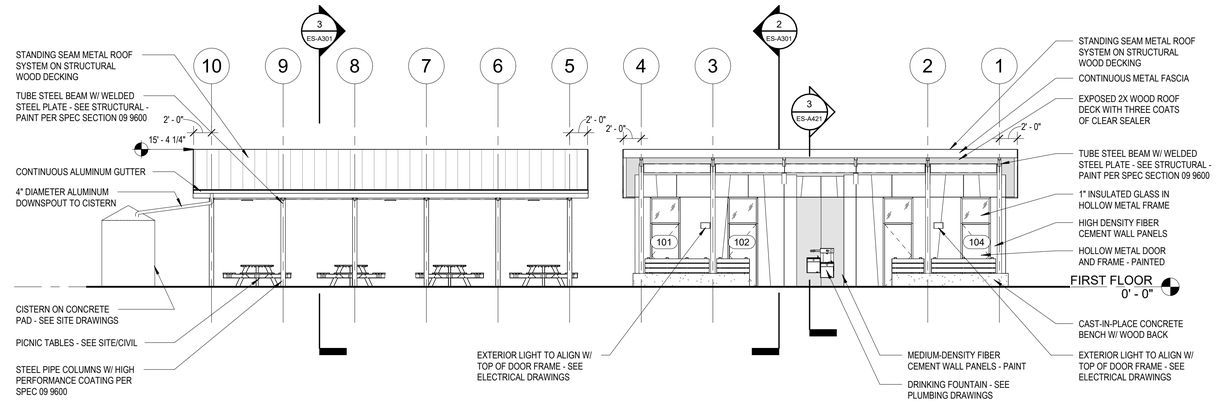

2 ES-A201 EAST PARCEL SHELTER - EAST ELEVATION
1/8" = 1'-0"

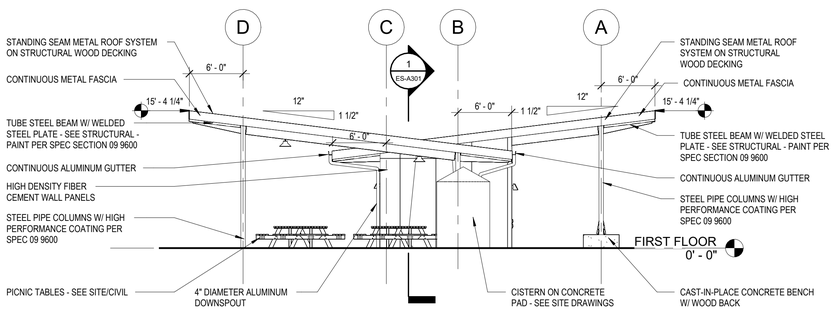

3 ES-A201 EAST PARCEL SHELTER - SOUTH ELEVATION
1/8" = 1'-0"

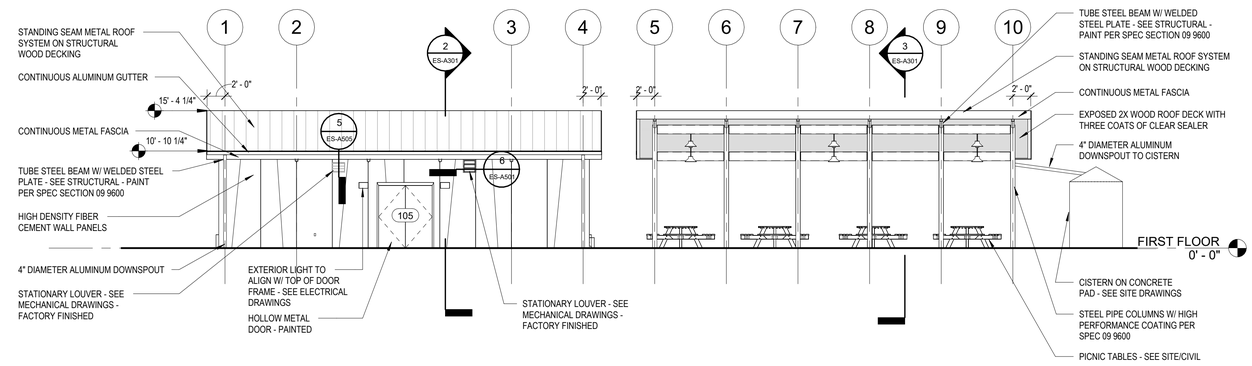

4 ES-A201 EAST PARCEL SHELTER - WEST ELEVATION
1/8" = 1'-0"

EXTERIOR MATERIAL SCHEDULE - EAST PARCEL SHELTER

WALLS	
HIGH DENSITY FIBER CEMENT PANELS	SWISSPEARL - AVERA - AV100+AV060
MEDIUM DENSITY FIBER CEMENT PANELS	HIGH PERFORMANCE COATING - SW 7048 - URBANE BRONZE
ROOF	
STANDING SEAM METAL PANELS	PAC-CLAD - TITE-LOCK - GRANITE
SOFFITS	EXPOSED WOOD DECKING WITH THREE COATS CLEAR SEAL
GUTTERS, DOWNSPOUTS, AND TRIM	
GUTTERS AND DOWNSPOUTS	HIGH PERFORMANCE COATING - SW 7048 - URBANE BRONZE

STEEL	
EXPOSED STRUCTURE	HIGH PERFORMANCE COATING - SW 7048 - URBANE BRONZE
HM DOORS AND FRAMES	HIGH PERFORMANCE COATING - SEE DOOR SCHEDULE FOR FINISH
GLAZING	
VISION GLASS	LOW-E CLEAR INSULATED GLASS

NOTES:

1. ALL FINISHES NOTED HERE REPRESENT THE BASIS OF DESIGN - SEE SPECIFICATIONS FOR THREE EQUALS
2. ALL EXTERIOR PAINTS TO BE HIGH-PERFORMANCE COATINGS PER SPEC SECTION 09 9600.

Susan Hatchell
Landscape Architecture, PLLC
711 W. North Street, Raleigh, NC 27603
p: 919-838-9600 f: 919-838-9700

Esse Architects
820 PERSHING ROAD | RALEIGH, NORTH CAROLINA 27608

EXTERIOR ELEVATIONS

LAKE MYRA COUNTY PARK
Wake County, NC

REVISIONS

Esse Architects P.A. Registered Architectural Corporation 52498 North Carolina Raleigh, NC

MIRANDA DOWNER POTTHOFF Registered Architect 11863 Miranda Potthoff North Carolina Raleigh, NC 7/27/2026

Date: 07/27/26

ES-A201

Docusign Envelope ID: B01E90F4-17F4-81DC-8054-9D51919BF271

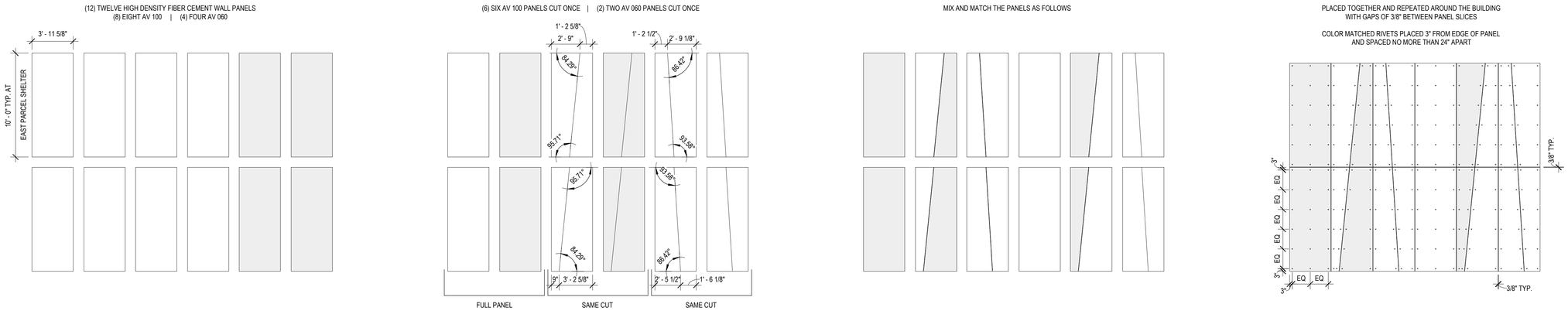

1 ES-A202 EAST PARCEL SHELTER EXTERIOR WALL PATTERN - EXPLODED
3/16" = 1'-0"

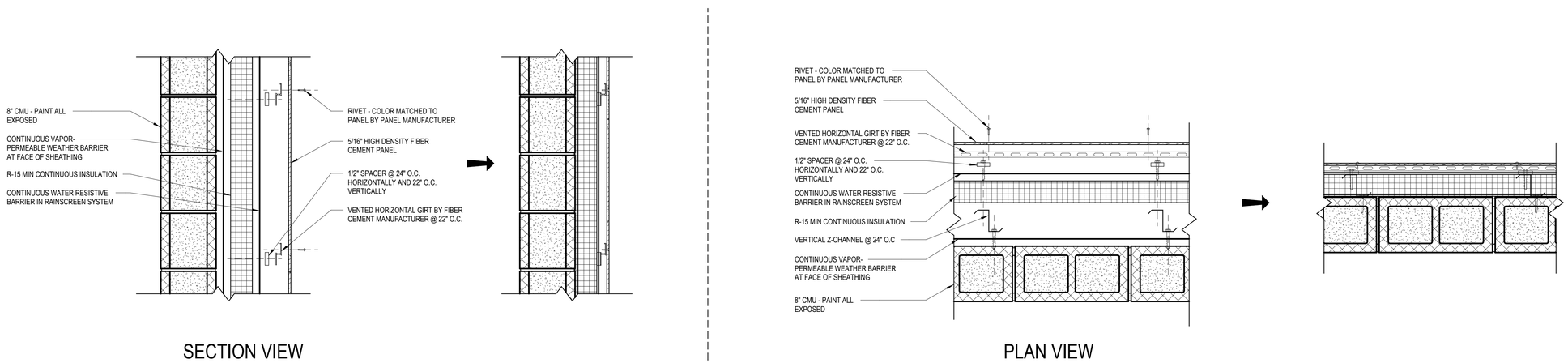

2 ES-A202 EXPLODED PANEL ATTACHMENT
1 1/2" = 1'-0"

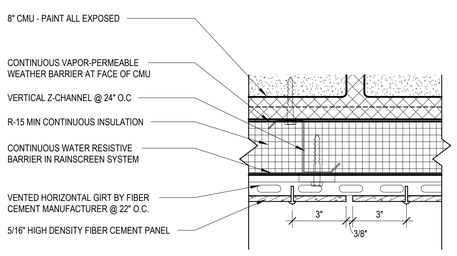

3 ES-A202 DETAIL @ VERTICAL PANEL JOINT
3" = 1'-0"

NOTE: PROVIDE CONTINUOUS POWDER COATED ALUMINUM TRIM ON ALL OUTSIDE CORNERS. SEE FLOOR PLAN AND DETAILS FOR LOCATION CALLOUTS.

Susan Hatchell
Landscape Architecture, PLLC
711 W. North Street, Raleigh, NC 27603
p: 919-838-9600 f: 919-838-9700

Esse Architects
832 PERSHING ROAD | RALEIGH, NORTH CAROLINA 27608

EXTERIOR PANEL LAYOUT

LAKE MYRA COUNTY PARK
Wake County, NC

Esse Architects P.A. Registered Architectural Corporation 52498 North Carolina Raleigh, NC

MIRANDA DONNER POTTHOFF Registered Architect 11663 North Carolina Raleigh, NC
Miranda Potthoff
7/27/2026

REVISIONS

Date: 07/27/26

ES-A202

Docusign Envelope ID: B01E90F4-17F4-81DC-8054-9D51919BF271

NOTES:
1. IMAGE IS FOR REFERENCE, CONFIRM LAYOUT THROUGH SHOP DRAWINGS
2. CENTER VERTICAL PANEL JOINTS WITH THE CENTER OF STEEL BEAMS ABOVE
3. SEE ES-202 FOR HIGH DENSITY FIBER CEMENT PANEL PATTERN AND PLACEMENT

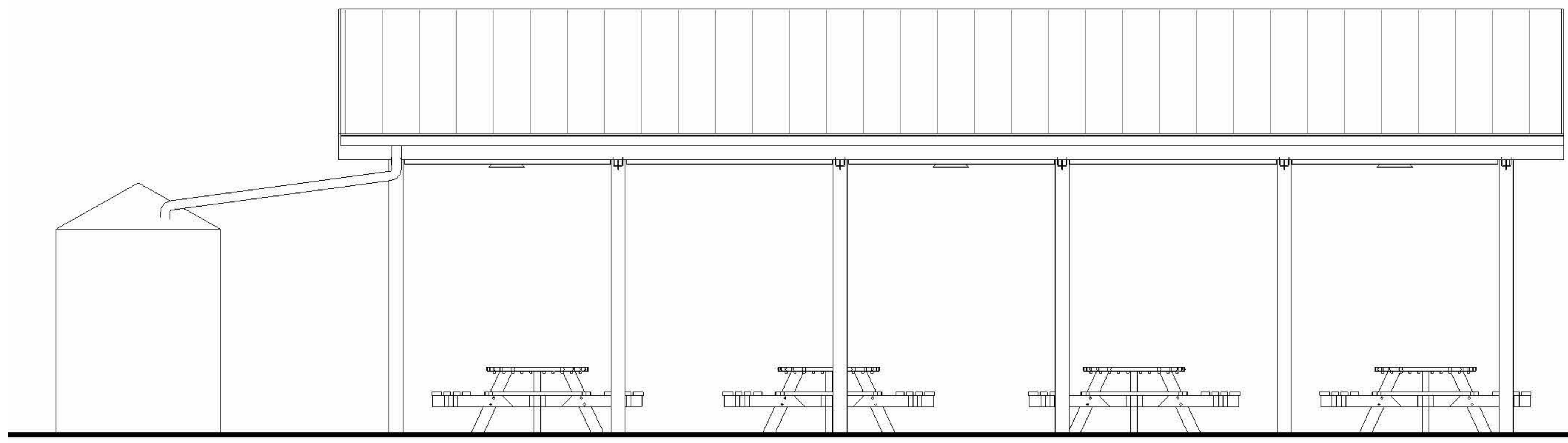

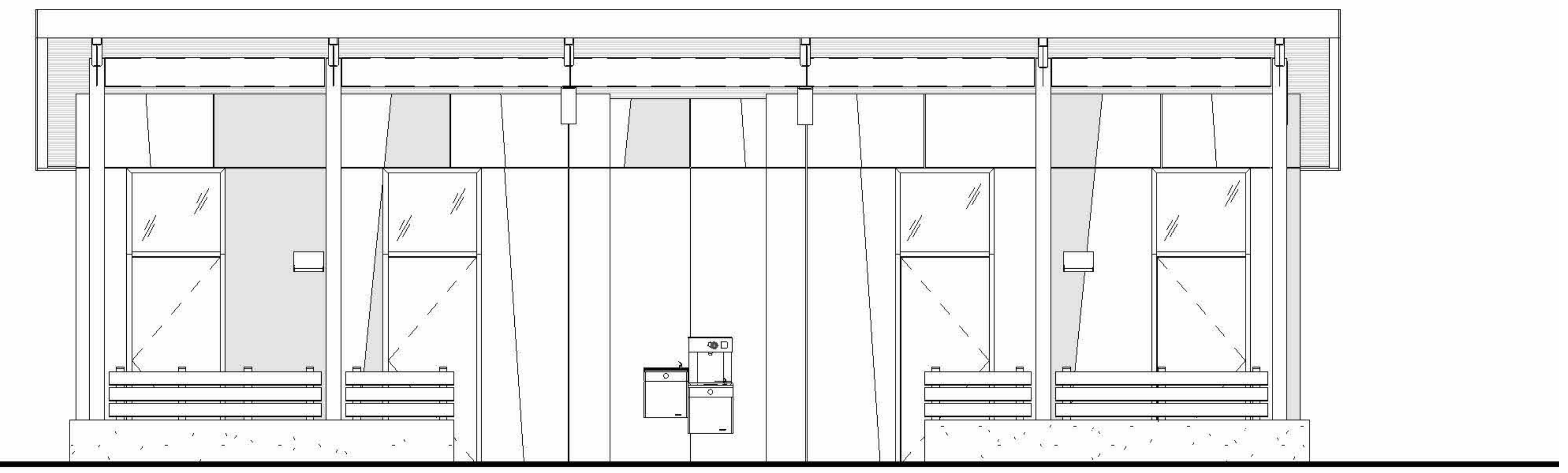

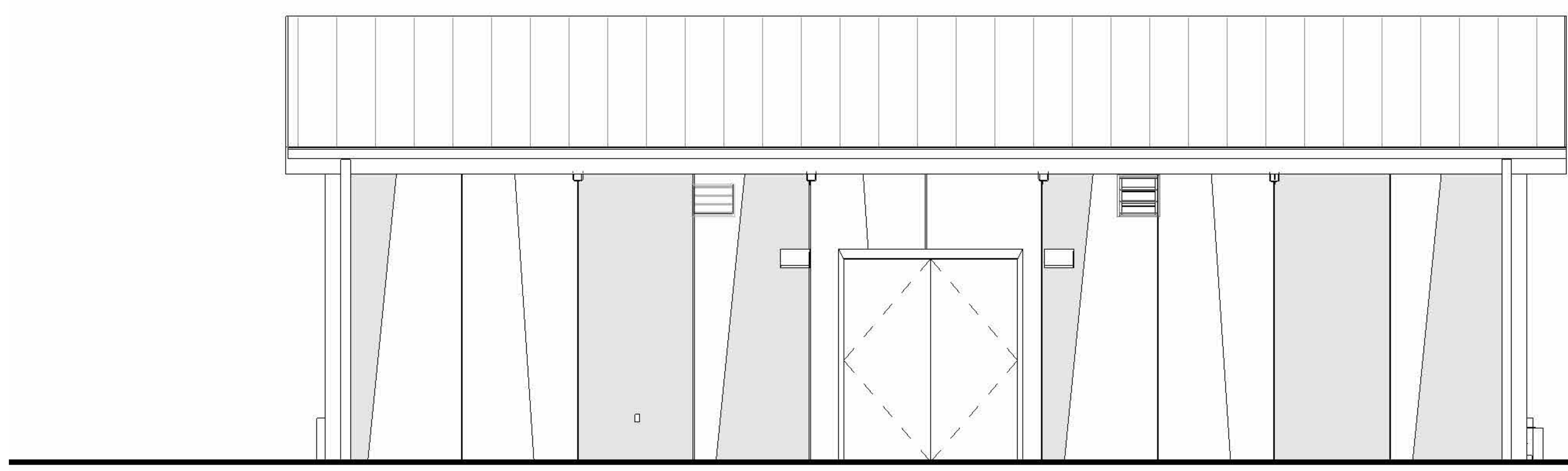

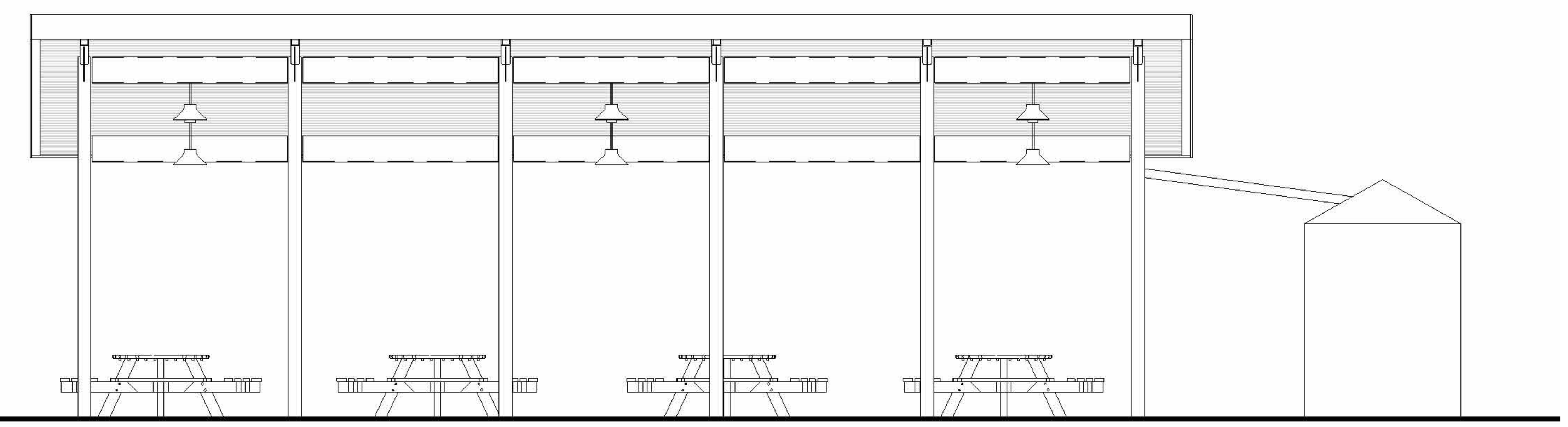

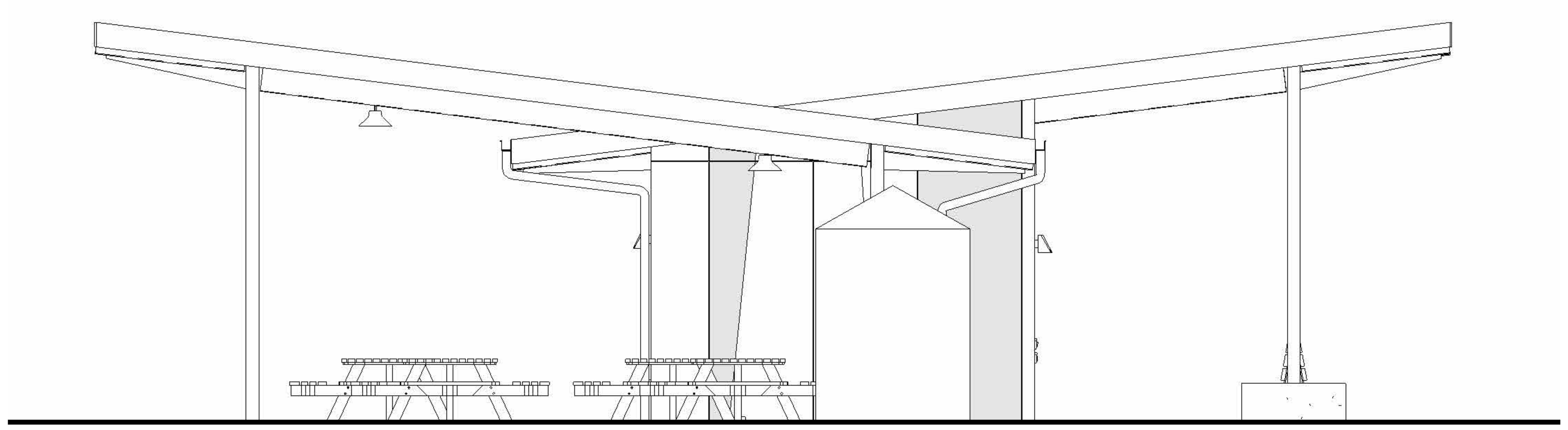

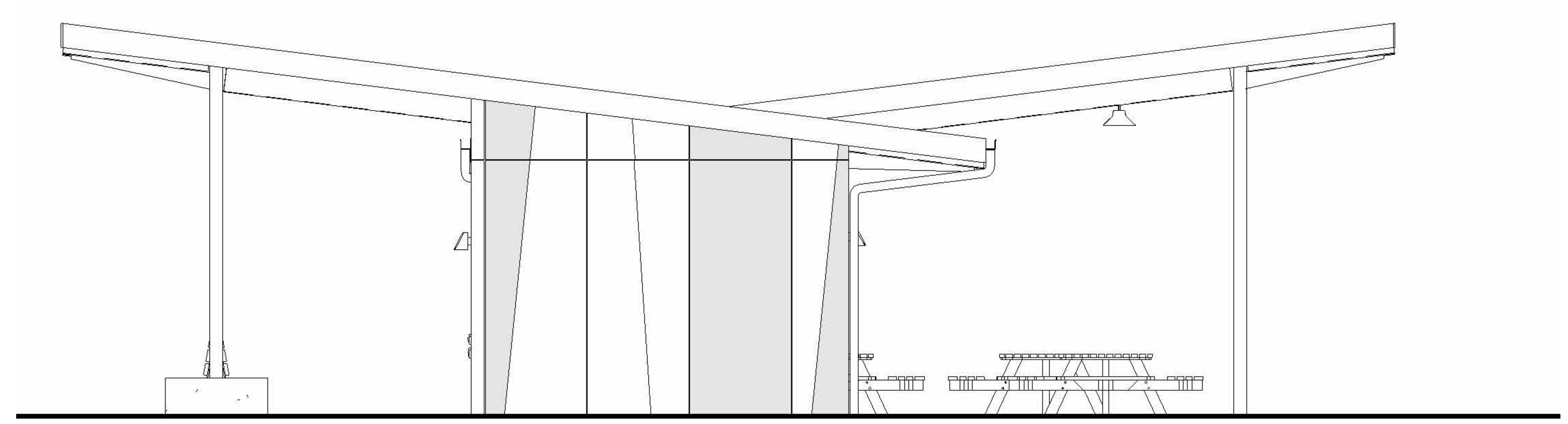

Susan Hatchell
Landscape Architecture, PLLC
711 W. North Street, Raleigh, NC 27603
p: 919-838-9600 f: 919-838-9700

Esse Architects
632 PERSHING ROAD | RALEIGH, NORTH CAROLINA 27608

EXTERIOR PANEL LAYOUT

LAKE MYRA COUNTY PARK
Wake County, NC

REVISIONS

Esse Architects P.A. Registered Architectural Corporation 52498 North Carolina Raleigh, NC

MIRANDA DOWNER POTTHOFF Registered Architect 11663 North Carolina Raleigh, NC
7/27/2026

Date: 07/27/26

ES-A203

Docusign Envelope ID: B01E90F4-17F4-81DC-8054-9D51919BF271

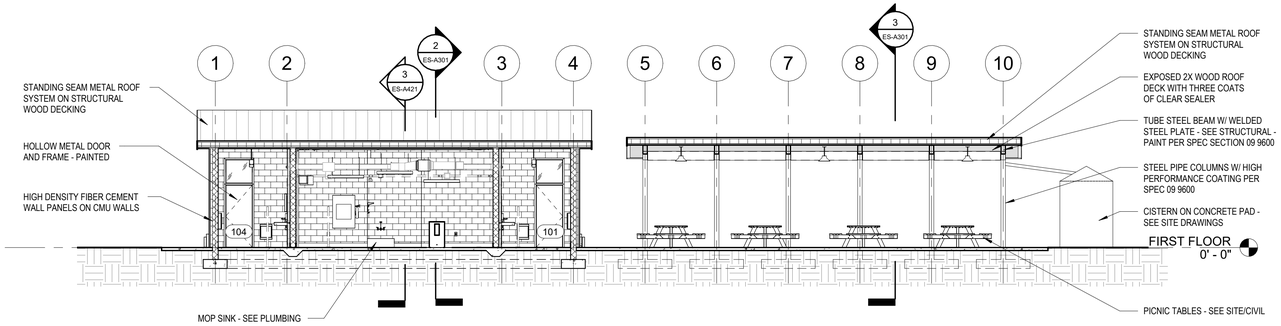

1 ES-A301 EAST PARCEL SHELTER - RESTROOM LONGITUDINAL SECTION
1/8" = 1'-0"

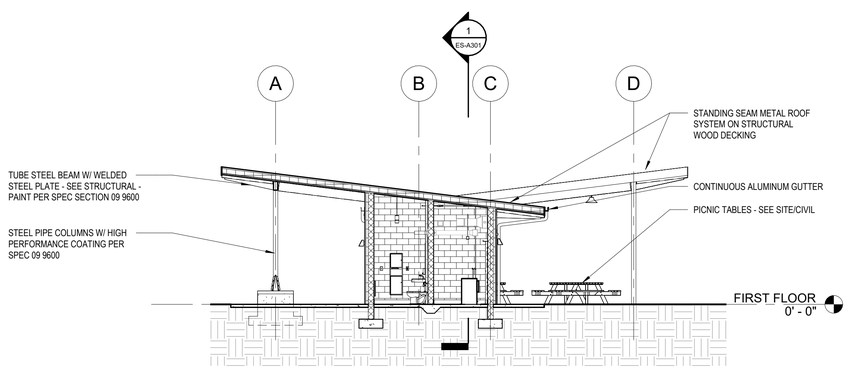

2 ES-A301 EAST PARCEL SHELTER - RESTROOM SECTION
1/8" = 1'-0"

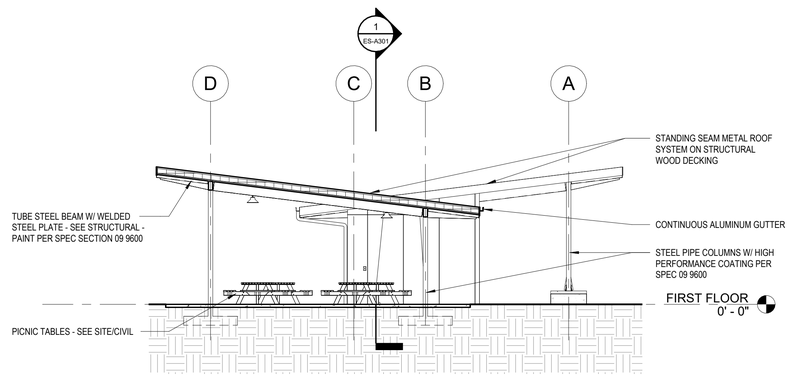

3 ES-A301 EAST PARCEL SHELTER - PICNIC SHELTER SECTION
1/8" = 1'-0"

Susan Hatchell
Landscape Architecture, PLLC
711 W. North Street, Raleigh, NC 27603
p: 919-838-9600 f: 919-838-9700

Esse Architects
632 PERSHING ROAD | RALEIGH, NORTH CAROLINA 27608

BUILDING SECTIONS

LAKE MYRA COUNTY PARK
Wake County, NC

REVISIONS

Esse Architects P.A. Registered Architectural Corporation 52498 North Carolina Raleigh, NC

MIRANDA DOWNER POTTHOFF Registered Architect 11863 North Carolina Raleigh, NC
Miranda Potthoff
7/27/2026

Date: 07/27/26

ES-A301

Docusign Envelope ID: B01E90F4-17F4-81DC-8054-9D51919BF271

NOTE: FLUSH VALVE MUST BE MOUNTED TO THE WIDE SIDE OF THE STALL.

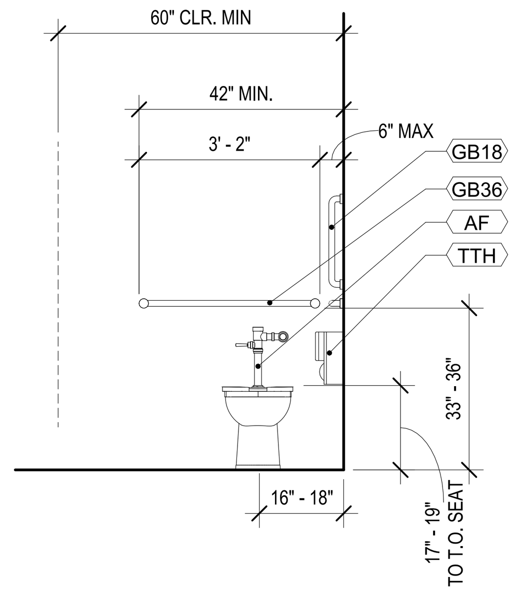

A

ADA TOILET STALL, FRONT ELEVATION

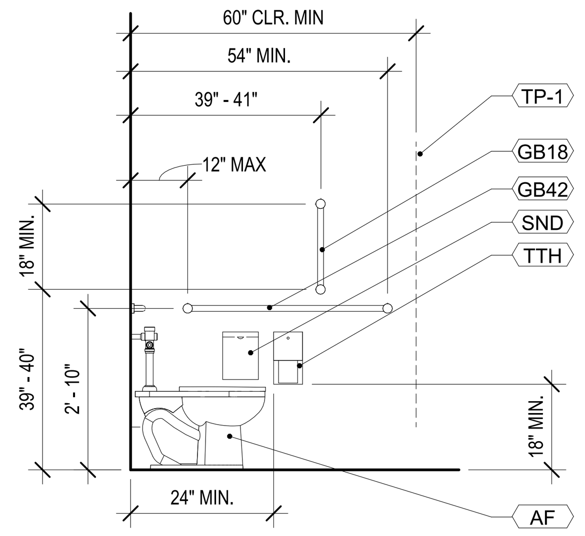

A

ADA TOILET STALL, SIDE ELEVATION

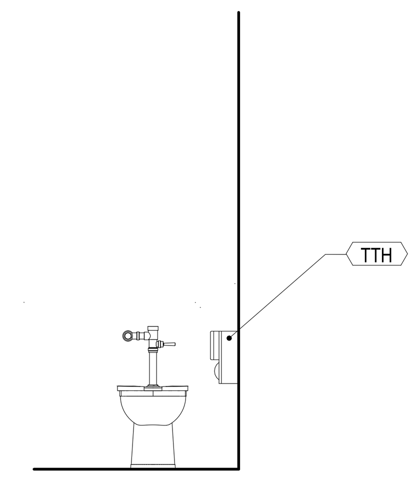

B

NON - ADA TOILET STALL, FRONT ELEVATION

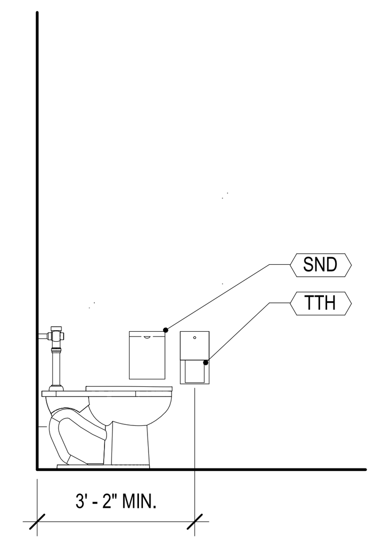

B

NON - ADA TOILET STALL, SIDE ELEVATION

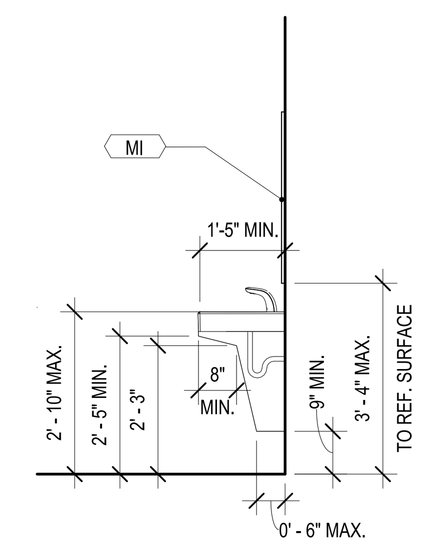

E

ADA WALL - MOUNTED SINK, SIDE ELEVATION

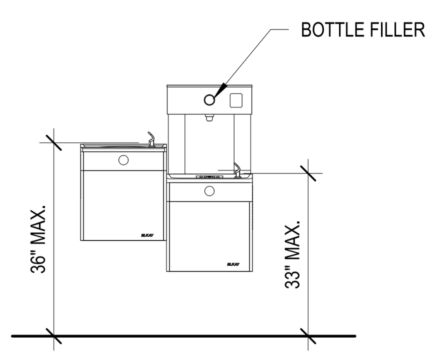

J

ADA WATER FOUNTAIN, FRONT ELEVATION

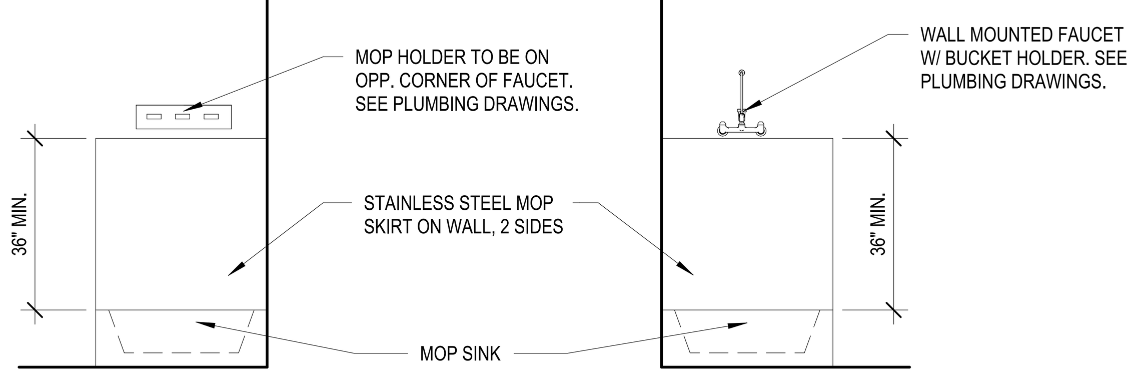

K

MOP SINK, TYPICAL SIDE ELEVATIONS

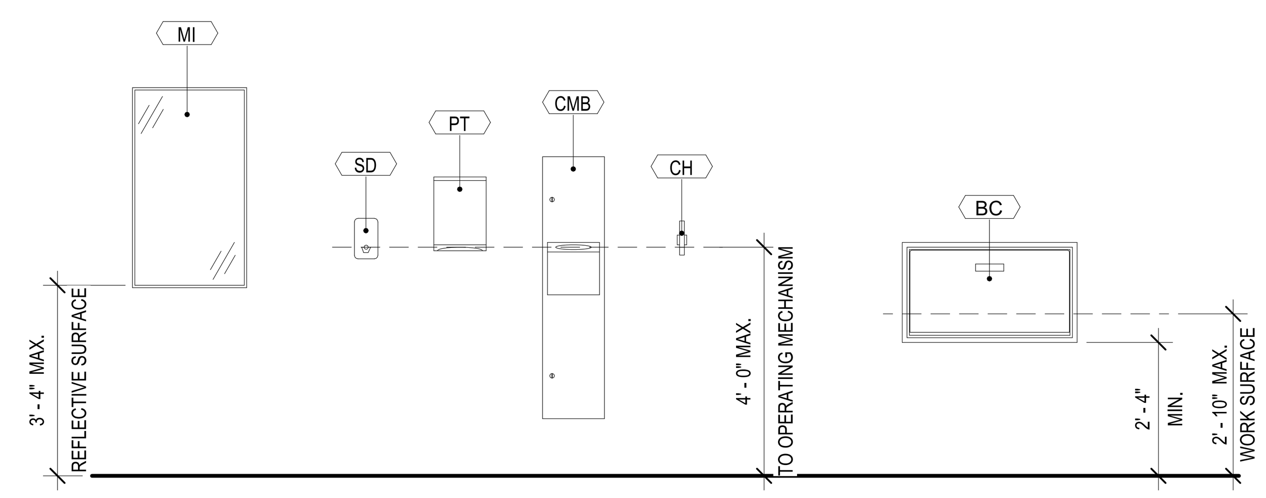

TOILET ACCESSORY MOUNTING HEIGHTS

SYMBOL LEGEND	
X-X	FINISH TAG
X	TOILET ASSEMBLY TAG. SEE A400 FOR ADDITIONAL INFORMATION

#	TOILET ACCESSORIES LEGEND
AF	ACCESSIBLE FIXTURE
BC	BABY CHANGING STATION - SURFACE MOUNTED
CF	CLEAR FLOOR SPACE 30" x 52"
CH	COAT HOOK
CMB	COMBINED PAPER TOWEL/TRASH
FD	FLOOR DRAIN - SEE PLUMBING DRAWINGS
GB18	GRAB BAR 18" LONG (VERTICAL)
GB32	GRAB BAR 32" LONG (REAR WALLS)
GB36	GRAB BAR 36" LONG (REAR WALLS)
GB42	GRAB BAR 42" LONG (SIDE WALLS)
MI	MIRROR 24" X 36"
PT	PAPER TOWEL DISPENSER
SD	SOAP DISPENSER
SND	SANITARY NAPKIN DISPOSAL
TD	67" ACCESSIBLE TURNING DIAMETER
TR	TRASH RECEPTACLE
TTH	TOILET TISSUE HOLDER

NOTES:

1. PLUMBING CONTRACTOR TO PROVIDE PROTECTIVE INSULATION AT HOT PIPES BELOW LAVATORY PER ACCESSIBILITY CODE.
2. FLUSH CONTROL VALVES AT ACCESSIBLE TOILETS TO BE MOUNTED ON THE WIDE SIDE OF TOILET STALL OR ROOM.
3. SEE SPECIFICATIONS FOR DETAILS OF TOILET ACCESSORIES.
4. ALL TOILET PARTITIONS ARE FLOOR MOUNTED AND OVERHEAD BRACED.
5. SLOPE SLAB TO DRAIN INTO FLOOR DRAINS. THRESHOLDS SLOPE IN DOOR OPENINGS SHALL NOT EXCEED 1:8 SLOPE OR 1/2" IN HEIGHT PER ACCESSIBILITY CODE.

Susan Hatchell Landscape Architecture, PLLC
711 W. North Street, Raleigh, NC 27603
p: 919-838-9600 f: 919-838-9700

Esse Architects
632 PERSHING ROAD | RALEIGH, NORTH CAROLINA 27608

TYPICAL TOILET AND BATH ACCESSORIES

LAKE MYRA COUNTY PARK
Wake County, NC

REVISIONS

Esse Architects P.A. Registered Architectural Corporation 52498 North Carolina Raleigh, NC

MIRANDA DOWNER POTTHOFF Registered Architect 11663 North Carolina Raleigh, NC 7/27/2026

Date: 07/27/26

ES-A400

Docusign Envelope ID: B01E90F4-17F4-81DC-8054-9D51919BF271

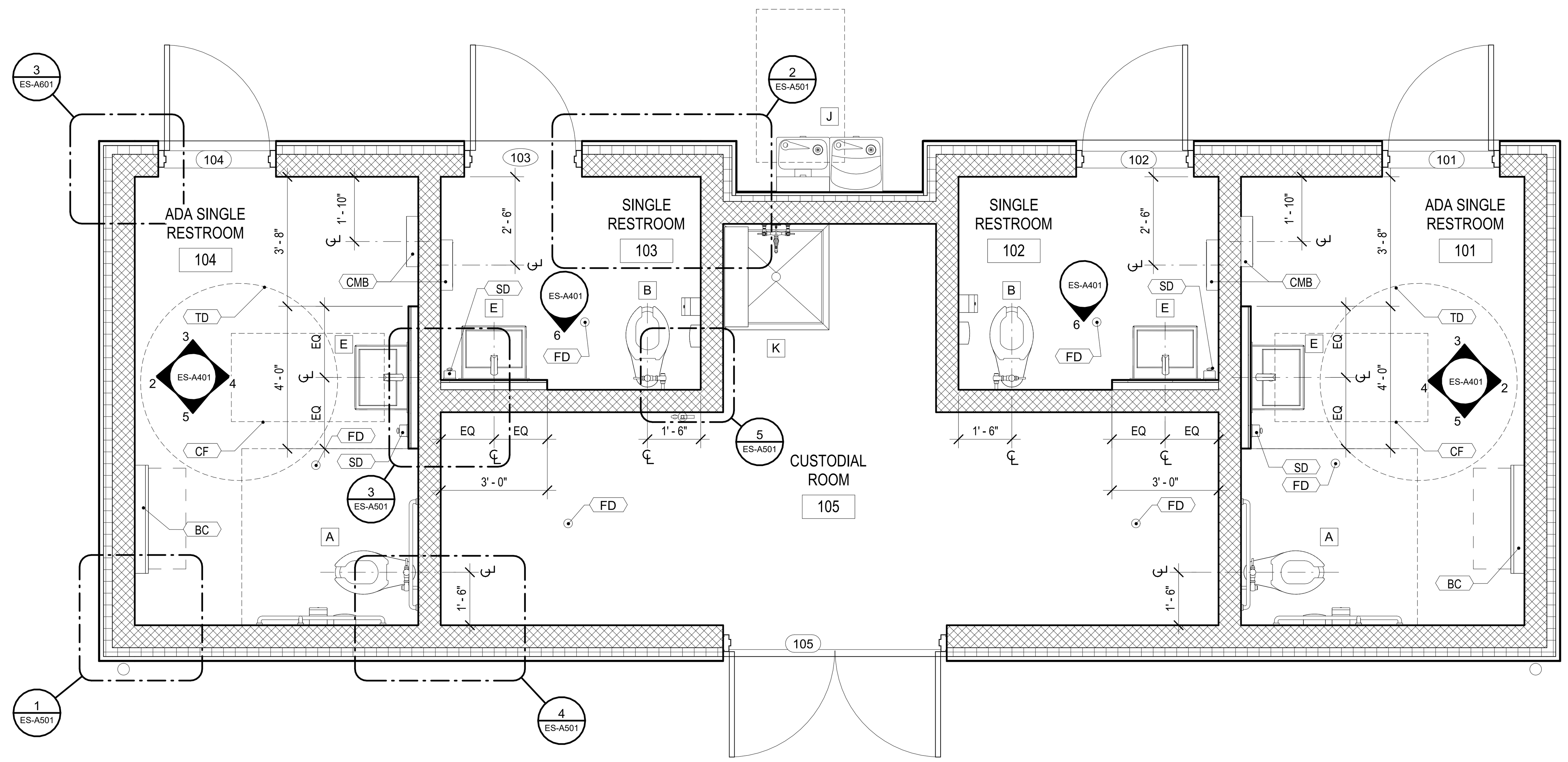

1 ES-A401 ENLARGED TOILET PLAN
3/8" = 1'-0"

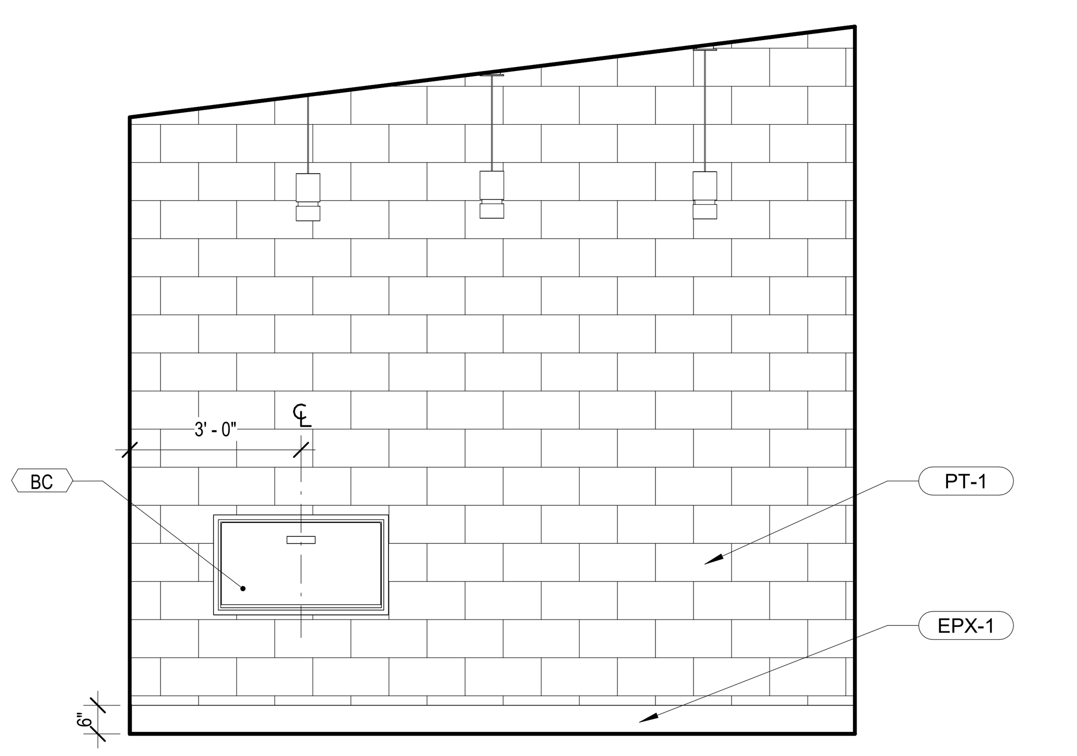

2 ES-A401 ADA SINGLE RESTROOM (101 & 104) - CHANGING STATION
3/8" = 1'-0"

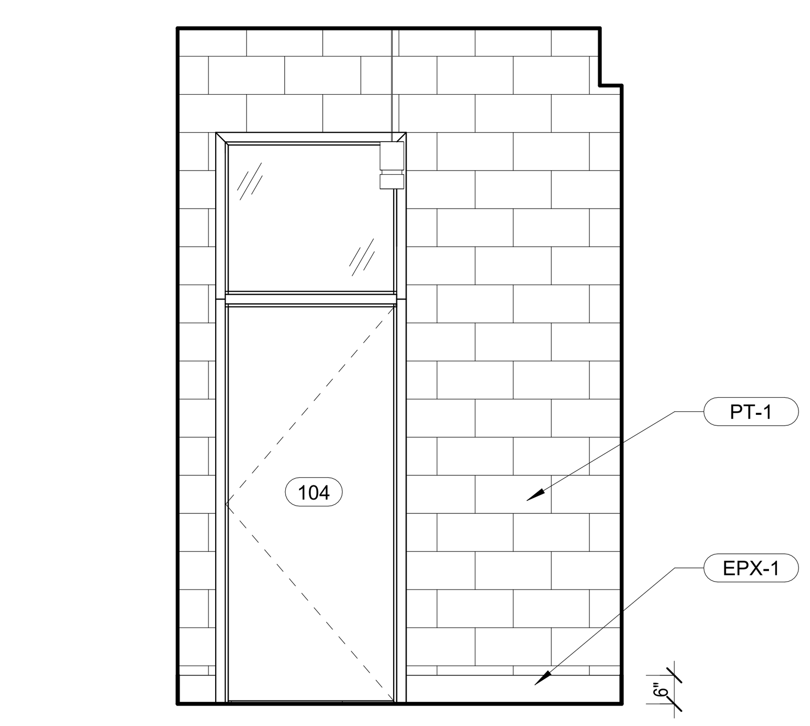

3 ES-A401 ADA SINGLE RESTROOM (101 & 104) - ENTRY
3/8" = 1'-0"

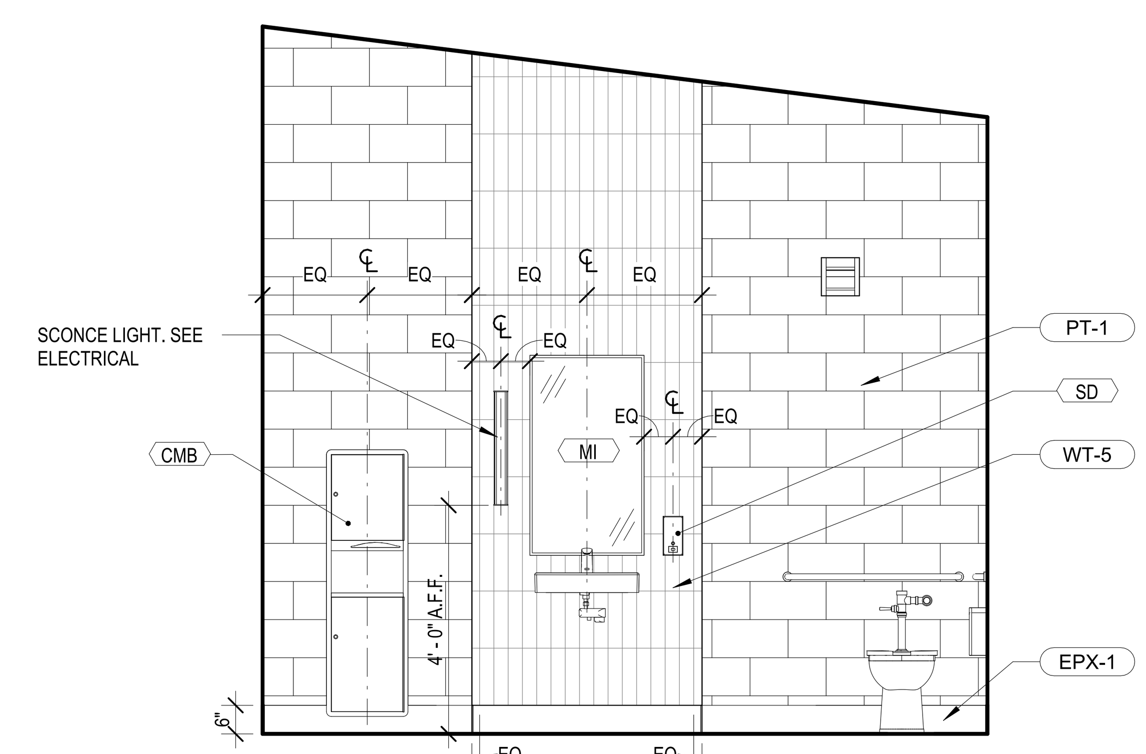

4 ES-A401 ADA SINGLE RESTROOM (101 & 104) - WET WALL
3/8" = 1'-0"

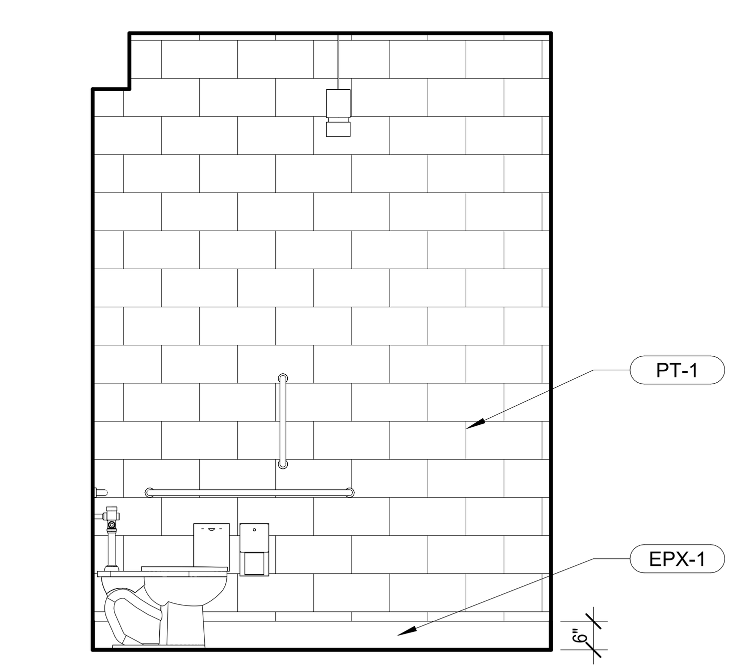

5 ES-A401 ADA SINGLE RESTROOM (101 & 104) - BACK WALL
3/8" = 1'-0"

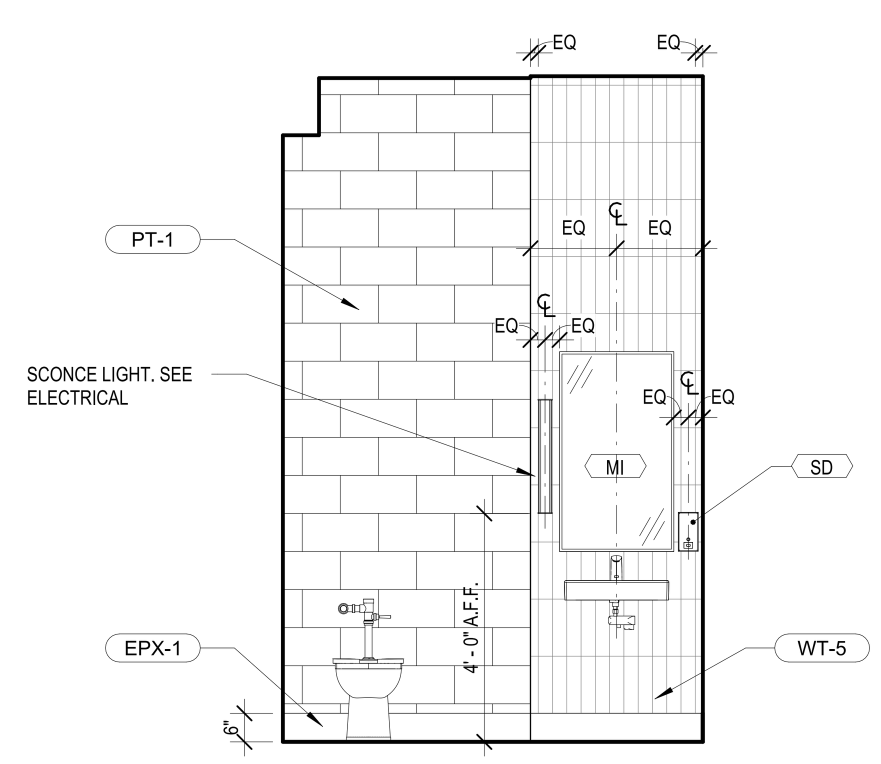

6 ES-A401 SINGLE RESTROOM (102 & 103) - WET WALL
3/8" = 1'-0"

SYMBOL LEGEND

X-X	FINISH TAG
X	TOILET ASSEMBLY TAG. SEE A400 FOR ADDITIONAL INFORMATION

TOILET ACCESSORIES LEGEND

AF	ACCESSIBLE FIXTURE
BC	BABY CHANGING STATION - SURFACE MOUNTED
CF	CLEAR FLOOR SPACE 30" x 52"
CH	COAT HOOK
CMB	COMBINED PAPER TOWEL/TRASH
FD	FLOOR DRAIN - SEE PLUMBING DRAWINGS
GB18	GRAB BAR 18" LONG (VERTICAL)
GB32	GRAB BAR 32" LONG (REAR WALLS)
GB36	GRAB BAR 36" LONG (REAR WALLS)
GB42	GRAB BAR 42" LONG (SIDE WALLS)
MI	MIRROR 24" X 36"
PT	PAPER TOWEL DISPENSER
SD	SOAP DISPENSER
SND	SANITARY NAPKIN DISPOSAL
TD	67" ACCESSIBLE TURNING DIAMETER
TR	TRASH RECEPTACLE
TTH	TOILET TISSUE HOLDER

NOTES:

1. PLUMBING CONTRACTOR TO PROVIDE PROTECTIVE INSULATION AT HOT PIPES BELOW LAVATORY PER ACCESSIBILITY CODE.
2. FLUSH CONTROL VALVES AT ACCESSIBLE TOILETS TO BE MOUNTED ON THE WIDE SIDE OF TOILET STALL OR ROOM.
3. SEE SPECIFICATIONS FOR DETAILS OF TOILET ACCESSORIES.
4. ALL TOILET PARTITIONS ARE FLOOR MOUNTED AND OVERHEAD BRACED.
5. SLOPE SLAB TO DRAIN INTO FLOOR DRAINS. THRESHOLDS SLOPE IN DOOR OPENINGS SHALL NOT EXCEED 1:8 SLOPE OR 1/2" IN HEIGHT PER ACCESSIBILITY CODE.

Susan Hatchell
Landscape Architecture, PLLC
711 W. North Street, Raleigh, NC 27603
p: 919-838-9600 f: 919-838-9700

Esse Architects
632 PERSHING ROAD | RALEIGH, NORTH CAROLINA 27608

ENLARGED TOILET PLANS AND ELEVATIONS

LAKE MYRA COUNTY PARK
Wake County, NC

REVISIONS

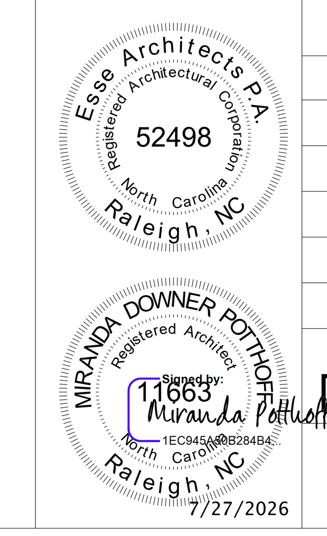

Date: 07/27/26

ES-A401

Docusign Envelope ID: B01E90F4-17F4-81DC-8054-9D51919BF271

ROOF DECKING NOTES

1. STRUCTURAL WOOD ROOF DECK IS ALSO FINISHED CEILING - **NO FASTENERS SHALL PENETRATE DECKING**
2. NO EXPOSED CONDUIT SHALL BE RUN ACROSS UNDERSIDE OF WOOD DECKING WITHOUT REVIEW AND COORDINATION WITH THE ARCHITECT. COORDINATE FOR LIGHTING, SECURITY, ETC.

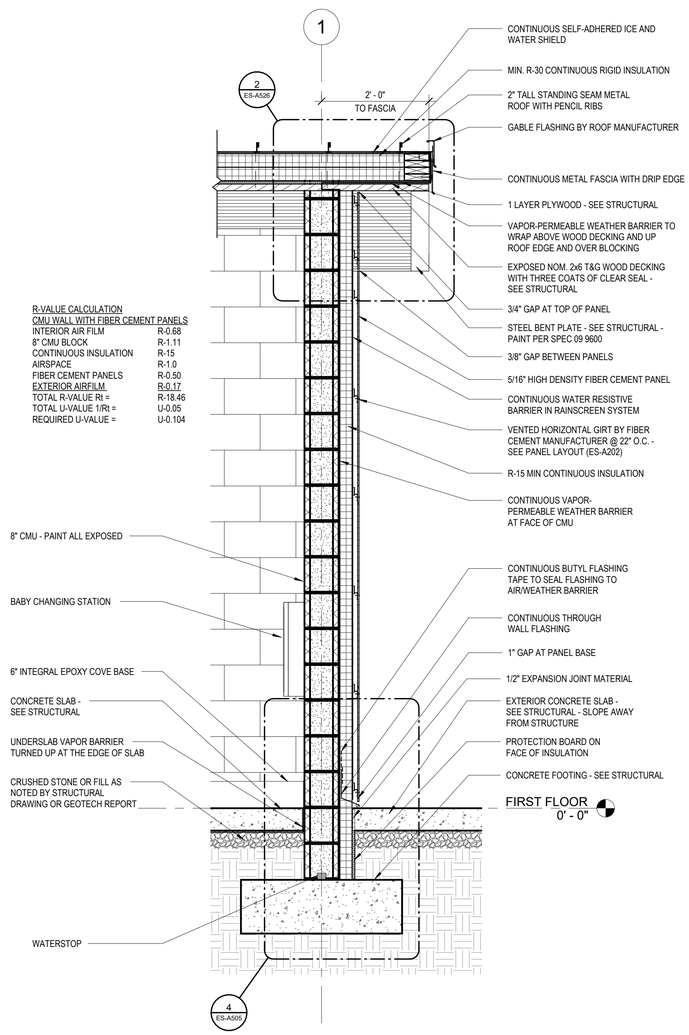

R-VALUE CALCULATION
CMU WALL WITH FIBER CEMENT PANELS

INTERIOR AIR FILM	R-0.68
8" CMU BLOCK	R-1.11
CONTINUOUS INSULATION	R-15
AIRSPACE	R-1.0
FIBER CEMENT PANELS	R-0.50
EXTERIOR AIRFILM	R-0.17
TOTAL R-VALUE Rt =	R-18.46
TOTAL U-VALUE 1/Rt =	U-0.05
REQUIRED U-VALUE =	U-0.104

1 ES-A421 TYP. WALL SECTION @ RESTROOM SIDE
3/4" = 1'-0"

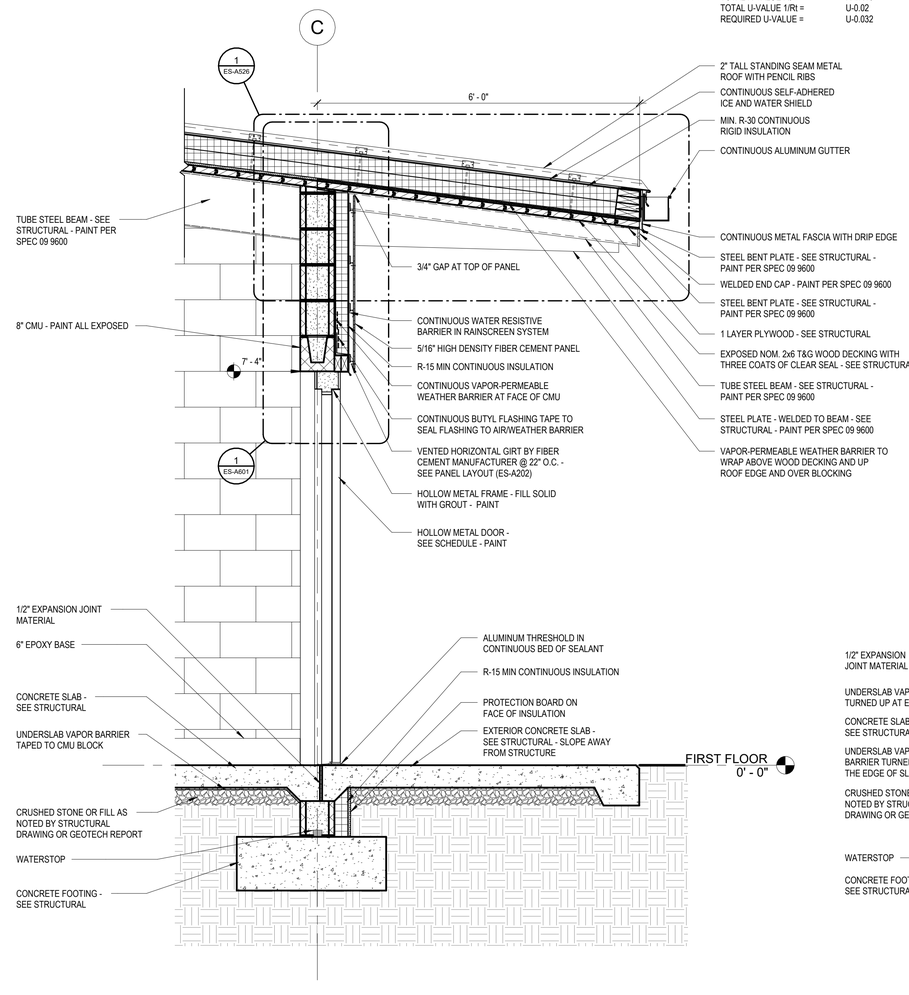

R-VALUE CALCULATION
STANDING SEAM ROOF ON METAL DECK

INTERIOR AIR FILM	R-0.68
2" WOOD ROOF DECK	R-1.88
1 LAYER PLYWOOD	R-0.62
POLYISO INSULATION	R-43.2
ICE AND WATER SHIELD	N/A
0.040 ALUMINUM PANELS	R-0.61
EXTERIOR AIR FILM	R-0.17
TOTAL R-VALUE Rt =	R-47.16
TOTAL U-VALUE 1/Rt =	U-0.02
REQUIRED U-VALUE =	U-0.032

2 ES-A421 WALL SECTION @ RESTROOM CUSTODIAL
3/4" = 1'-0"

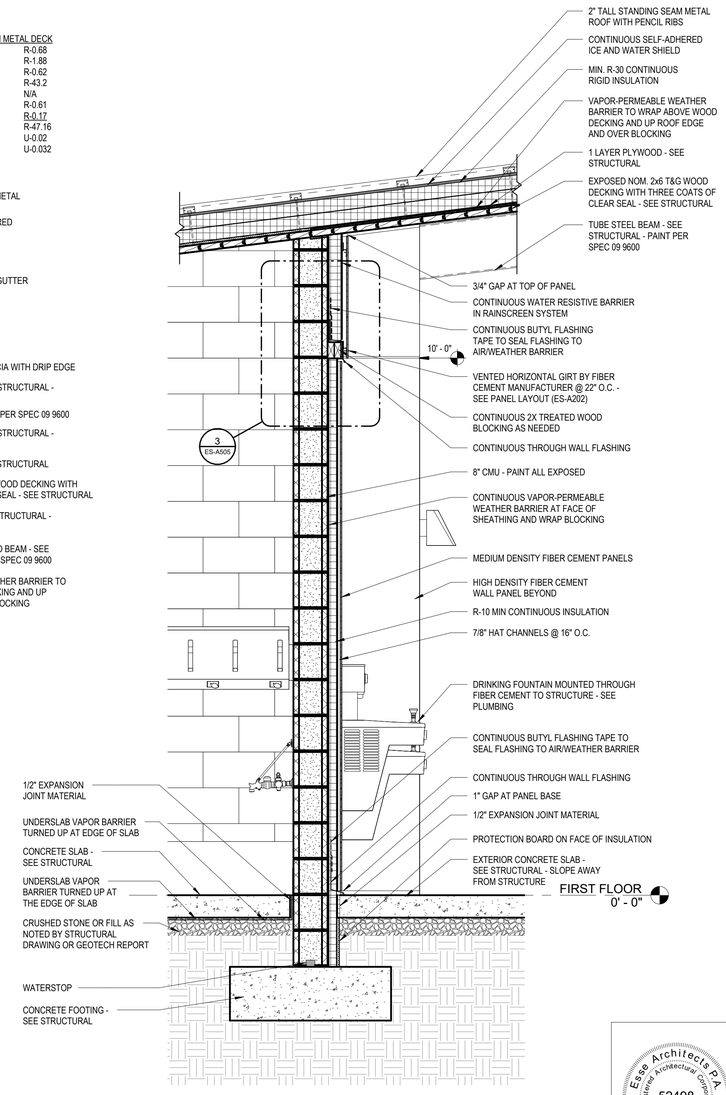

3 ES-A421 WALL SECTION @ DRINKING FOUNTAIN
3/4" = 1'-0"

Susan Hatchell
Landscape Architecture, PLLC
711 W. North Street, Raleigh, NC 27603
p: 919-838-9600 f: 919-838-9700

Esse Architects
832 PERSHING ROAD | RALEIGH, NORTH CAROLINA 27608

WALL SECTIONS

LAKE MYRA COUNTY PARK
Wake County, NC

REVISIONS

Esse Architects P.A. Registered Architectural Corporation 52498 North Carolina Raleigh, NC

MIRANDA DONNER ROTHOFF Registered Architect 17663 North Carolina Raleigh, NC 7/27/2026

Date: 07/27/26

ES-A421

Docusign Envelope ID: B01E90F4-17F4-81DC-8054-9D51919BF271

ROOF DECKING NOTES

1. STRUCTURAL WOOD ROOF DECK IS ALSO FINISHED CEILING - **NO FASTENERS SHALL PENETRATE DECKING**
2. NO EXPOSED CONDUIT SHALL BE RUN ACROSS UNDERSIDE OF WOOD DECKING WITHOUT REVIEW AND COORDINATION WITH THE ARCHITECT. COORDINATE FOR LIGHTING, SECURITY, ETC.

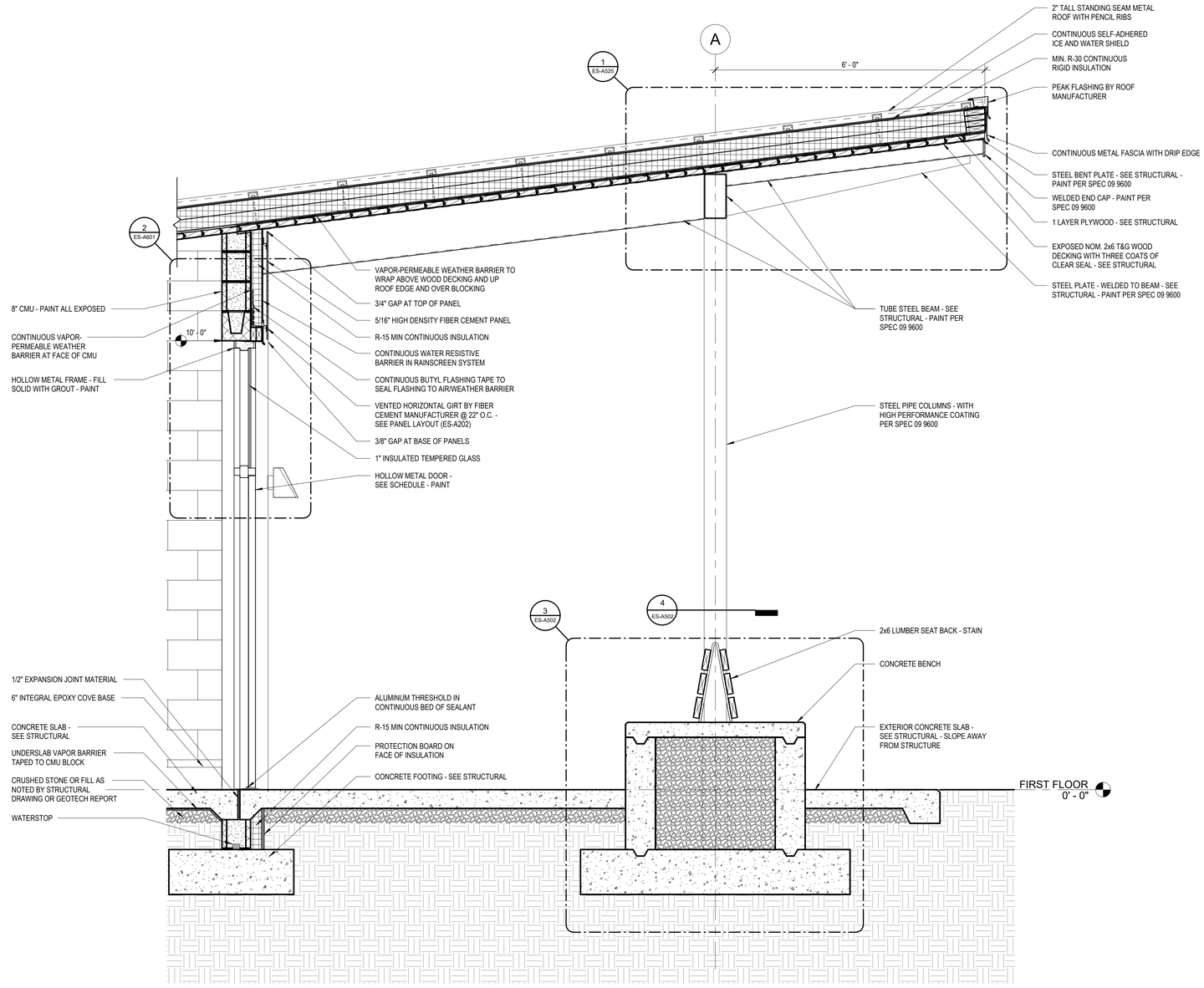

1 ES-A422 WALL SECTION @ RESTROOM ENTRIES
3/4" = 1'-0"

Susan Hatchell
Landscape Architecture, PLLC
711 W. North Street, Raleigh, NC 27603
p: 919-838-9600 f: 919-838-9700

Esse Architects
832 PERSHING ROAD | RALEIGH, NORTH CAROLINA 27608

WALL SECTIONS

LAKE MYRA COUNTY PARK
Wake County, NC

REVISIONS

Esse Architects P.A. Registered Architectural Corporation 52498 North Carolina Raleigh, NC

MIRANDA DONNER POTTHOFF Registered Architect 11863 Signature Miranda Potthoff 7/27/2026 North Carolina Raleigh, NC

Date: 07/27/26

ES-A422

Docusign Envelope ID: B01E90F4-17F4-81DC-8054-9D51919BF271

ROOF DECKING NOTES

1. STRUCTURAL WOOD ROOF DECK IS ALSO FINISHED CEILING - **NO FASTENERS SHALL PENETRATE DECKING**
2. NO EXPOSED CONDUIT SHALL BE RUN ACROSS UNDERSIDE OF WOOD DECKING WITHOUT REVIEW AND COORDINATION WITH THE ARCHITECT. COORDINATE FOR LIGHTING, SECURITY, ETC.

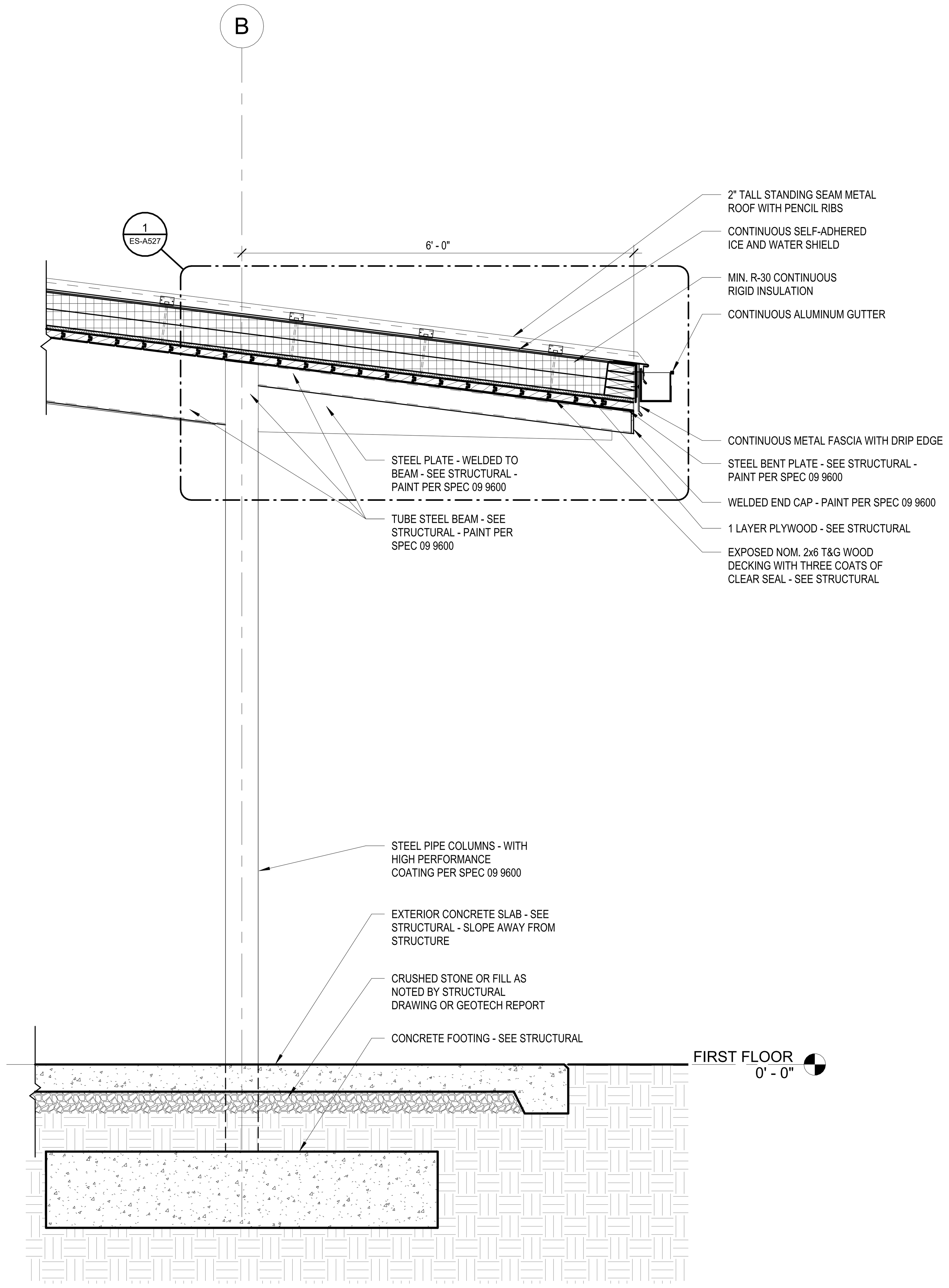

1 ES-A423 **WALL SECTION @ PICNIC SHELTER LOW ROOF**
3/4" = 1'-0"

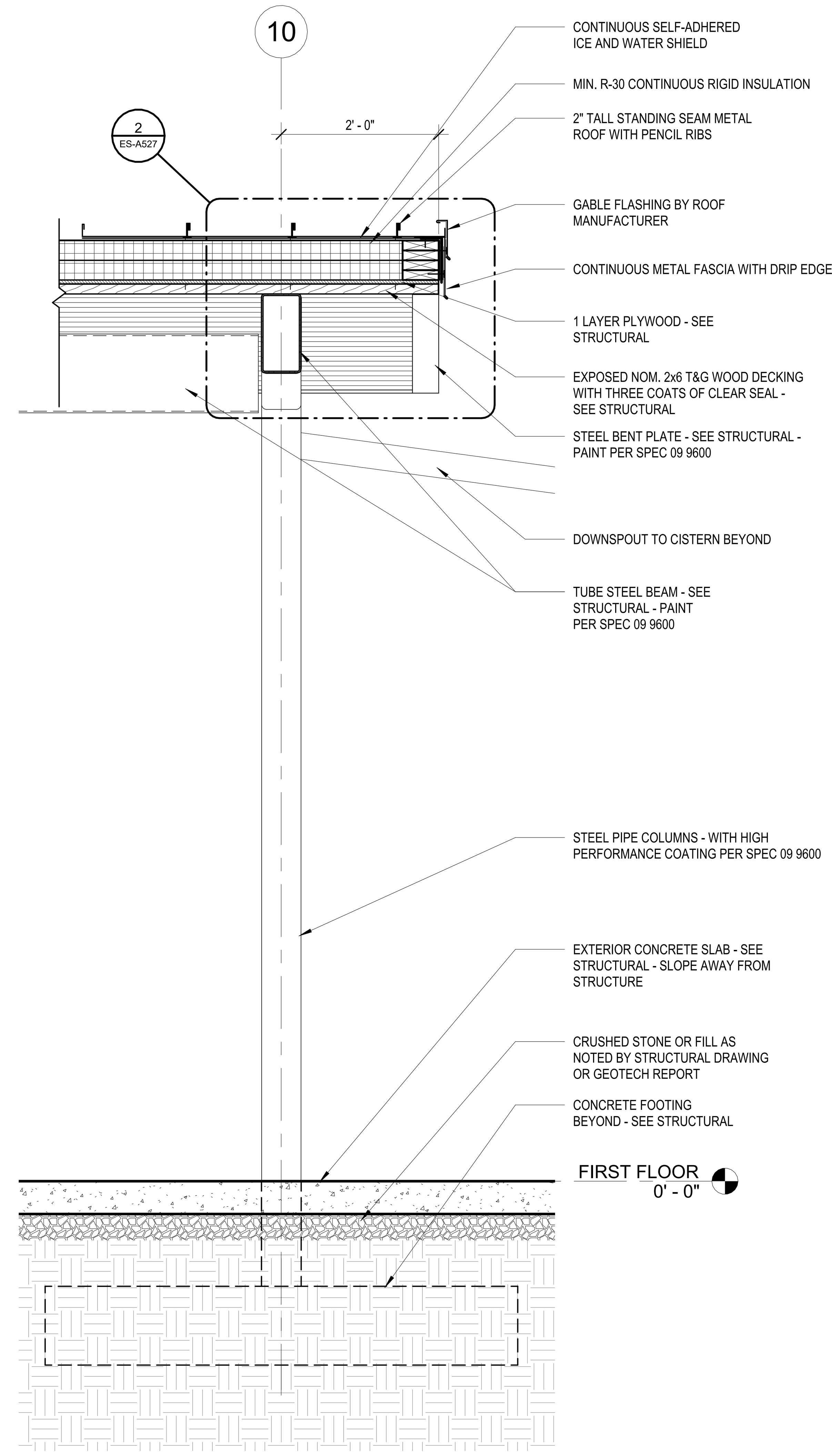

2 ES-A423 **WALL SECTION @ PICNIC SHELTER SIDE**
3/4" = 1'-0"

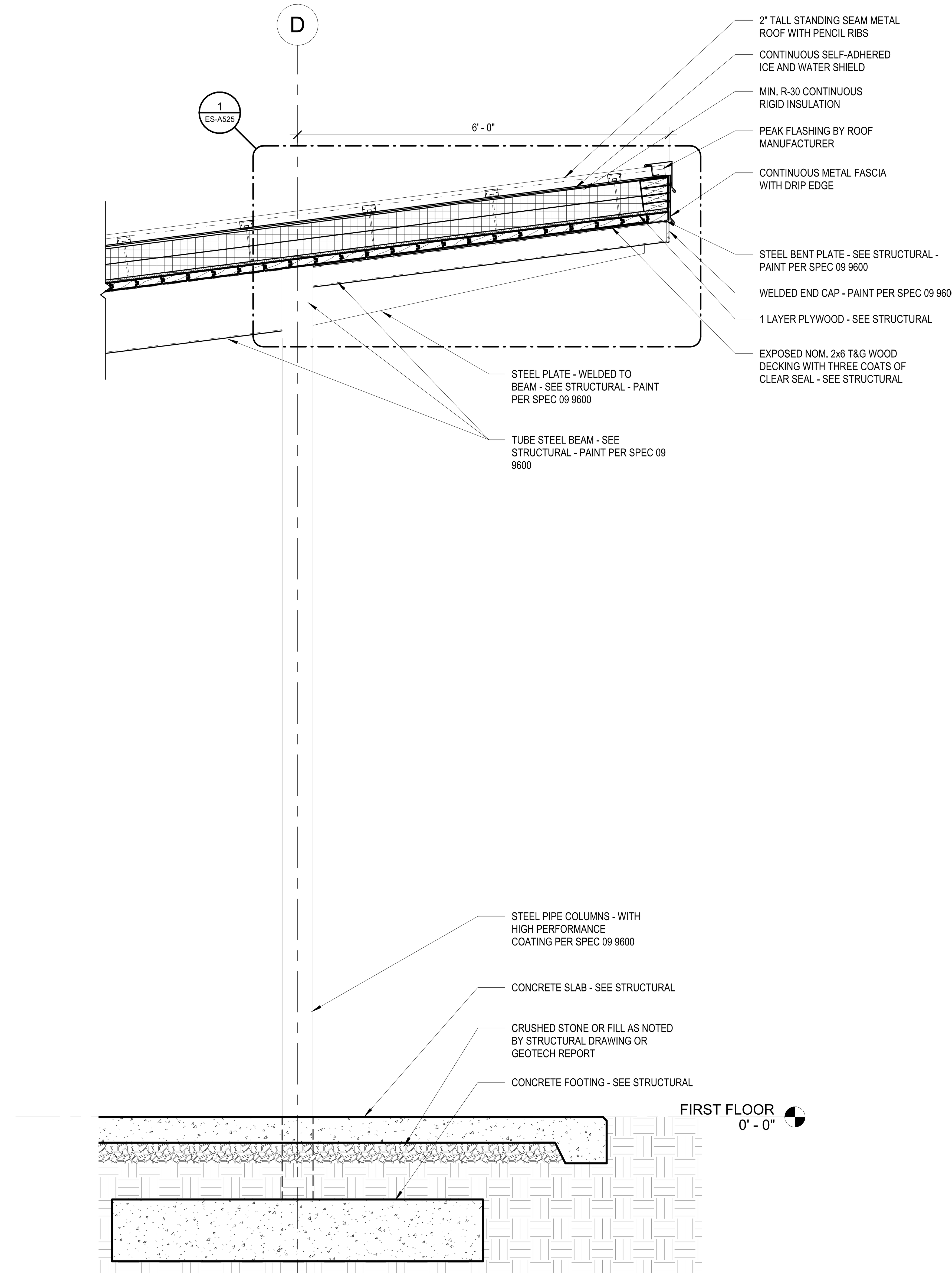

3 ES-A423 **WALL SECTION @ PICNIC SHELTER HIGH ROOF**
3/4" = 1'-0"

Susan Hatchell
Landscape Architecture, PLLC
711 W. North Street, Raleigh, NC 27603
p: 919-838-9600 f: 919-838-9700

Esse Architects
632 PERSHING ROAD | RALEIGH, NORTH CAROLINA 27608

WALL SECTIONS

LAKE MYRA COUNTY PARK
Wake County, NC

REVISIONS

Esse Architects P.A. Registered Architectural Corporation 52498 North Carolina Raleigh, NC

MIRANDA DOWNER POTTHOFF Registered Architect 11663 North Carolina Raleigh, NC
Signed by: Miranda Potthoff 1EC945A50B284B4...
7/27/2026

Date: 07/27/26

ES-A423

Docusign Envelope ID: B01E90F4-17F4-81DC-8054-9D51919BF271

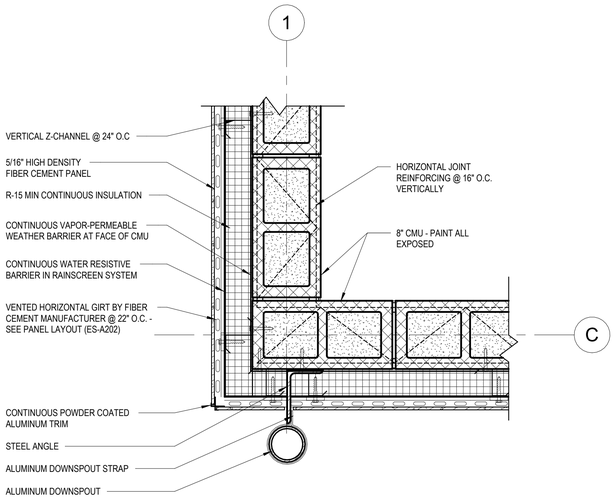

1 ES-A501 PLAN DETAIL @ OUTSIDE CORNER
1 1/2" = 1'-0"

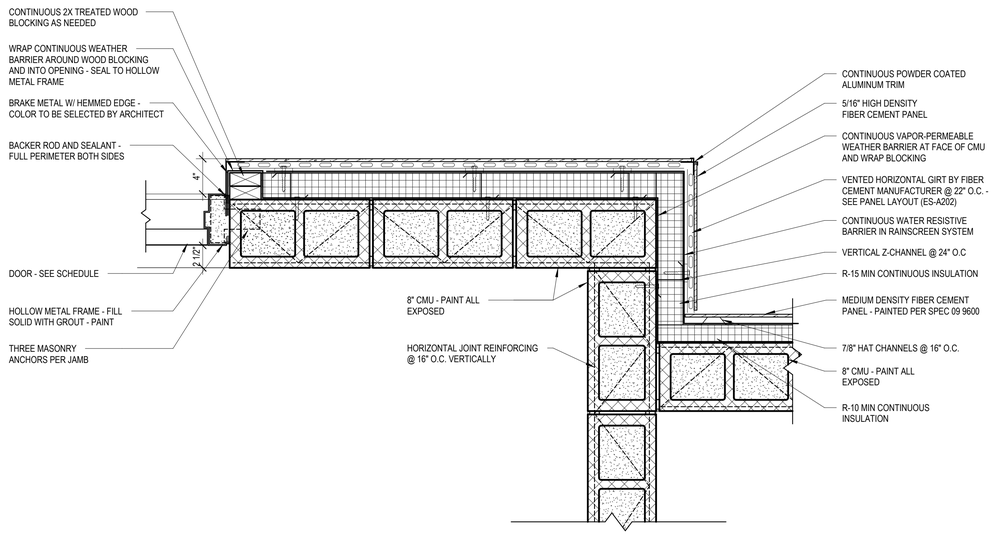

2 ES-A501 PLAN DETAIL @ DRINKING FOUNTAIN CORNER
1 1/2" = 1'-0"

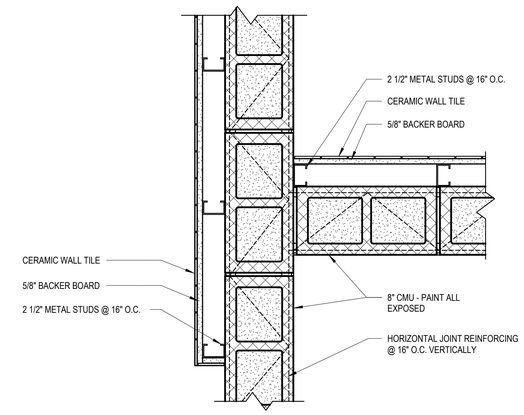

3 ES-A501 PLAN DETAIL @ RESTROOM 2
1 1/2" = 1'-0"

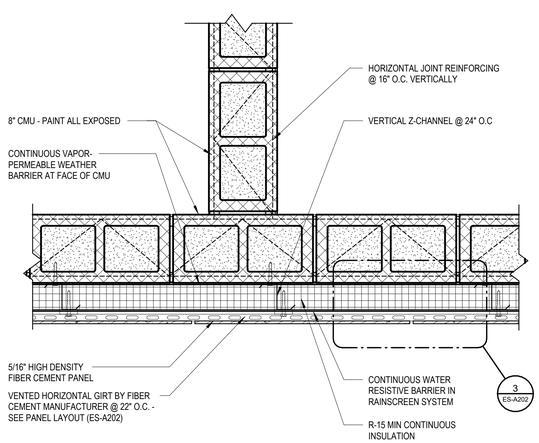

4 ES-A501 PLAN DETAIL @ CUSTODIAL ROOM
1 1/2" = 1'-0"

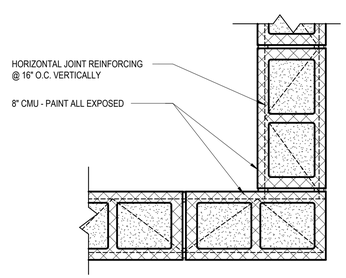

5 ES-A501 PLAN DETAIL @ CUSTODIAL ROOM 2
1 1/2" = 1'-0"

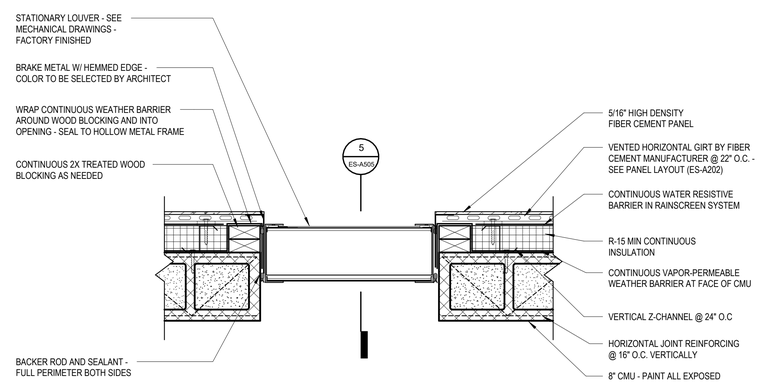

6 ES-A501 LOUVER PLAN DETAIL
1 1/2" = 1'-0"

Susan Hatchell
Landscape Architecture, PLLC
711 W. North Street, Raleigh, NC 27603
p: 919-838-9600 f: 919-838-9700

Esse Architects
8312 PERSIMMON ROAD | RALEIGH, NORTH CAROLINA 27608

PLAN DETAILS

LAKE MYRA COUNTY PARK
Wake County, NC

REVISIONS

Esse Architects P.A. Registered Architectural Corporation 52498 Raleigh, North Carolina

MIRANDA DOWNER POTTHOFF Registered Architect 14663 Signature Miranda Potthoff DocuSign Envelope ID: 1EC9455A-B024-4B8E-A7C1-A7F7A7A7A7A7 Raleigh, North Carolina 7/27/2026

Date: 07/27/26

ES-A501

Docusign Envelope ID: B01E90F4-17F4-81DC-8054-9D51919BF271

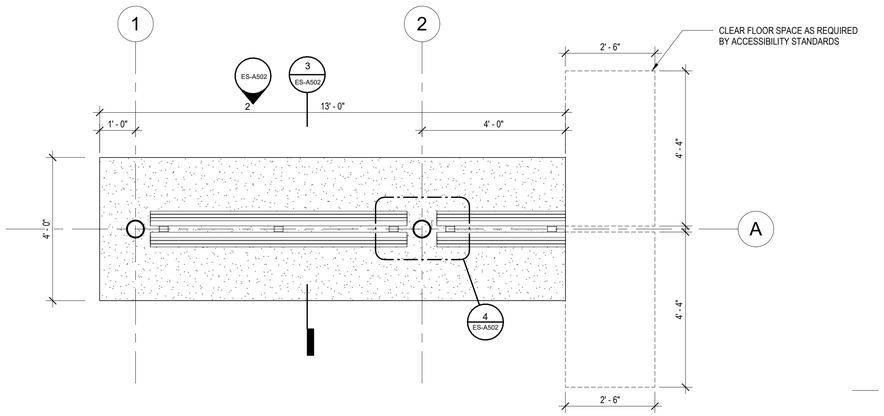

1 ES-A502 ENLARGED BENCH PLAN
1/2" = 1'-0"

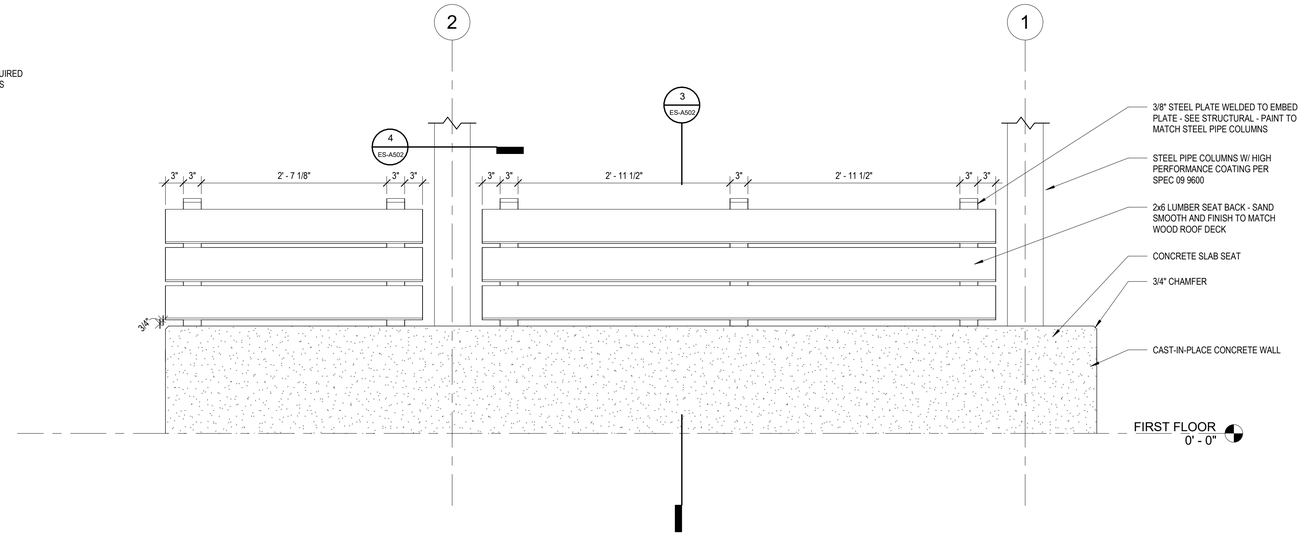

2 ES-A502 BENCH ELEVATION
1" = 1'-0"

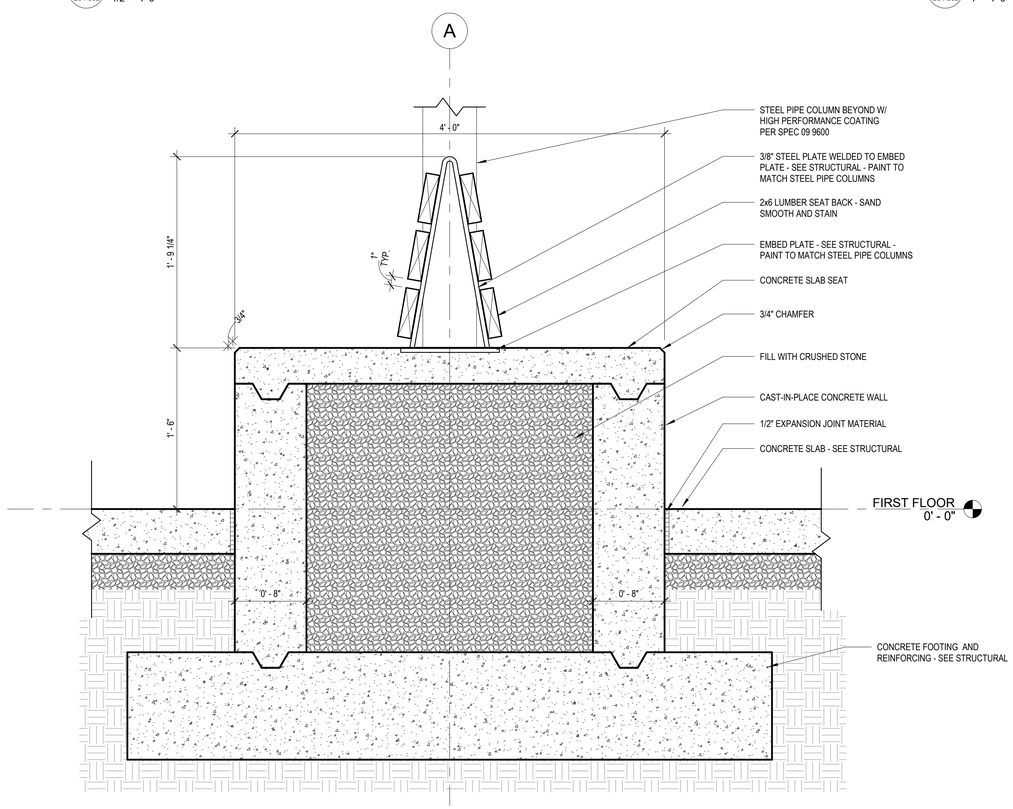

3 ES-A502 BENCH SECTION
1 1/2" = 1'-0"

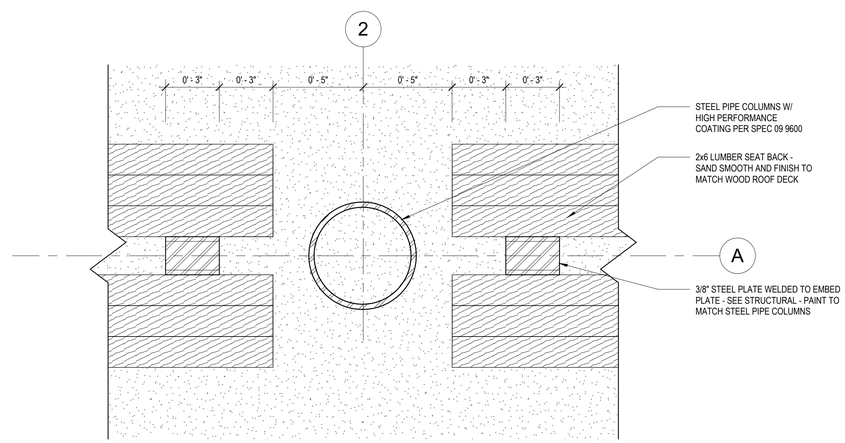

4 ES-A502 BENCH BACK DETAIL
3" = 1'-0"

Susan Hatchell Landscape Architecture, PLLC
711 W. North Street, Raleigh, NC 27603
p: 919-838-9600 f: 919-838-9700

Esse Architects
832 PERSHING ROAD | RALEIGH, NORTH CAROLINA 27608

BENCH DETAILS

LAKE MYRA COUNTY PARK
Wake County, NC

REVISIONS

Esse Architects P.A. Registered Architectural Corporation 52498 North Carolina Raleigh, NC

MIRANDA DOWNER POTTHOFF Registered Architect 11663 North Carolina Raleigh
Miranda Potthoff
Docu Sign Envelope ID: 1EC845A0-B284-BE
7/27/2026

Date: 07/27/26

ES-A502

Docusign Envelope ID: B01E90F4-17F4-81DC-8054-9D51919BF271

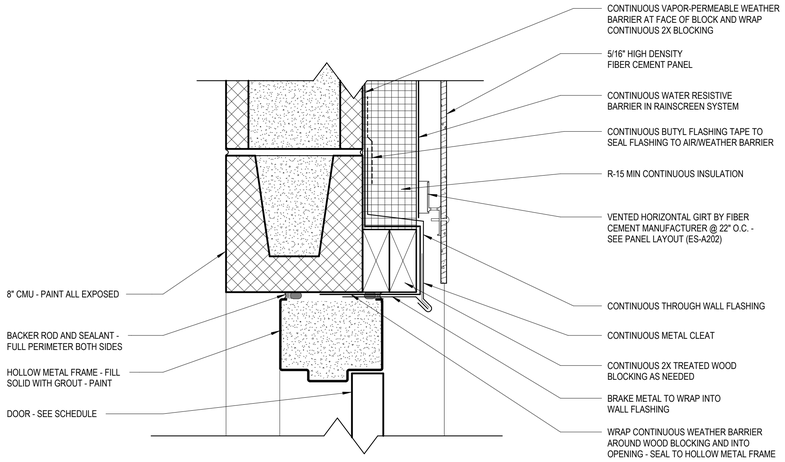

1 ES-A505 AIR BARRIER DETAIL @ HM DOOR HEAD
3" = 1'-0"

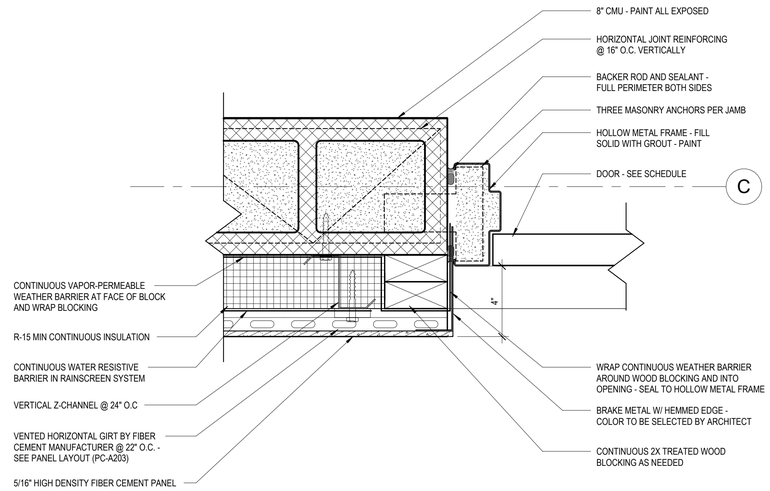

2 ES-A505 AIR BARRIER DETAIL @ HM DOOR JAMB
3" = 1'-0"

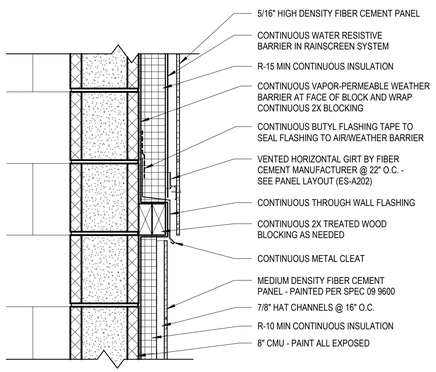

3 ES-A505 HEAD DETAIL @ DRINKING FOUNTAIN WALL
1 1/2" = 1'-0"

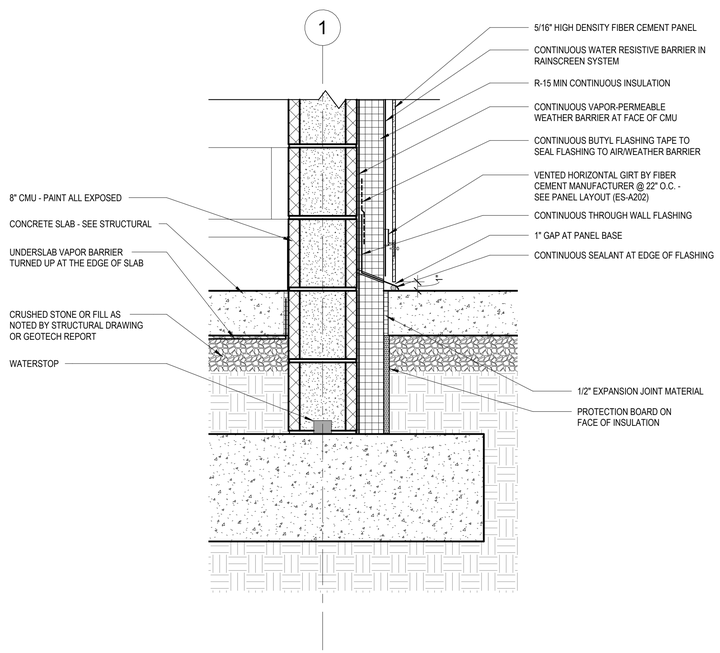

4 ES-A505 DETAIL @ PANEL BASE
1 1/2" = 1'-0"

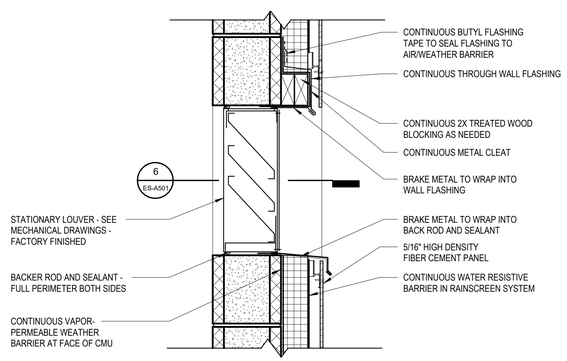

5 ES-A505 LOUVER SECTION DETAIL
1 1/2" = 1'-0"

Susan Hatchell
Landscape Architecture, PLLC
711 W. North Street, Raleigh, NC 27603
p: 919-838-9600 f: 919-838-9700

Esse Architects
832 PERSHING ROAD | RALEIGH, NORTH CAROLINA 27608

AIR BARRIER DETAILS

LAKE MYRA COUNTY PARK
Wake County, NC

REVISIONS

Esse Architects P.A. Registered Architectural Corporation 52498 North Carolina Raleigh, NC

MIRANDA DONNER POTTHOFF Registered Architect 11863 Signature Miranda Potthoff IEC84540B28484E7 North Carolina Raleigh, NC 7/27/2026

Date: 07/27/26

ES-A505

Docusign Envelope ID: B01E90F4-17F4-81DC-8054-9D51919BF271

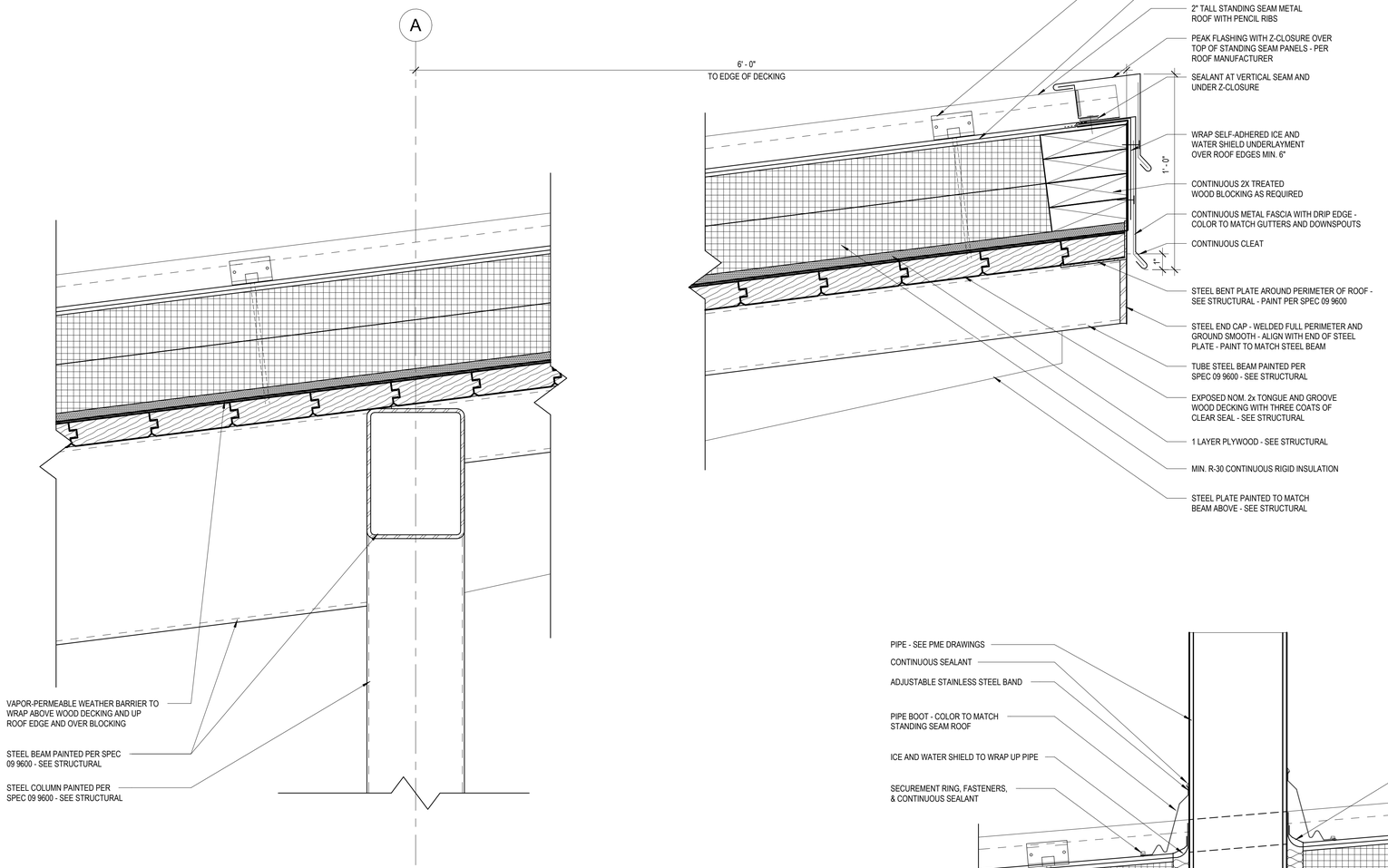

1 ES-A525 ROOF DETAIL @ HIGH SIDE
3" = 1'-0"

ROOF DECKING NOTES

1. STRUCTURAL WOOD ROOF DECK IS ALSO FINISHED CEILING - **NO FASTENERS SHALL PENETRATE DECKING**
2. NO EXPOSED CONDUIT SHALL BE RUN ACROSS UNDERSIDE OF WOOD DECKING WITHOUT REVIEW AND COORDINATION WITH THE ARCHITECT. COORDINATE FOR LIGHTING, SECURITY, ETC.

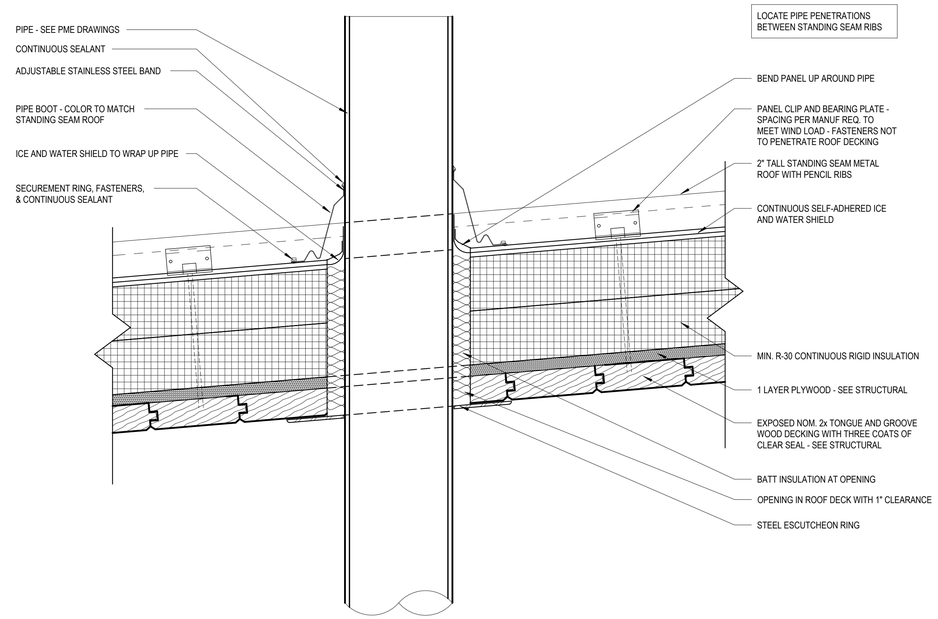

3 ES-A525 ROOF DETAIL @ PENETRATION
3" = 1'-0"

Susan Hatchell
Landscape Architecture, PLLC
711 W. North Street, Raleigh, NC 27603
p: 919-838-9600 f: 919-838-9700

Esse Architects
632 PERSHING AVENUE | RALEIGH, NORTH CAROLINA 27608

ROOF DETAILS

LAKE MYRA COUNTY PARK
Wake County, NC

REVISIONS

Esse Architects P.A. Registered Architectural Corporation 52498 North Carolina Raleigh, NC

MIRANDA DONNER POTTHOFF Registered Architect 14663 Signature Miranda Potthoff Docusign Envelope ID: 1EC94548-9028-4B4E-B07A-CA15C... 7/27/2026 Raleigh, NC

Date: 07/27/26

ES-A525

Docusign Envelope ID: B01E90F4-17F4-81DC-8054-9D51919BF271

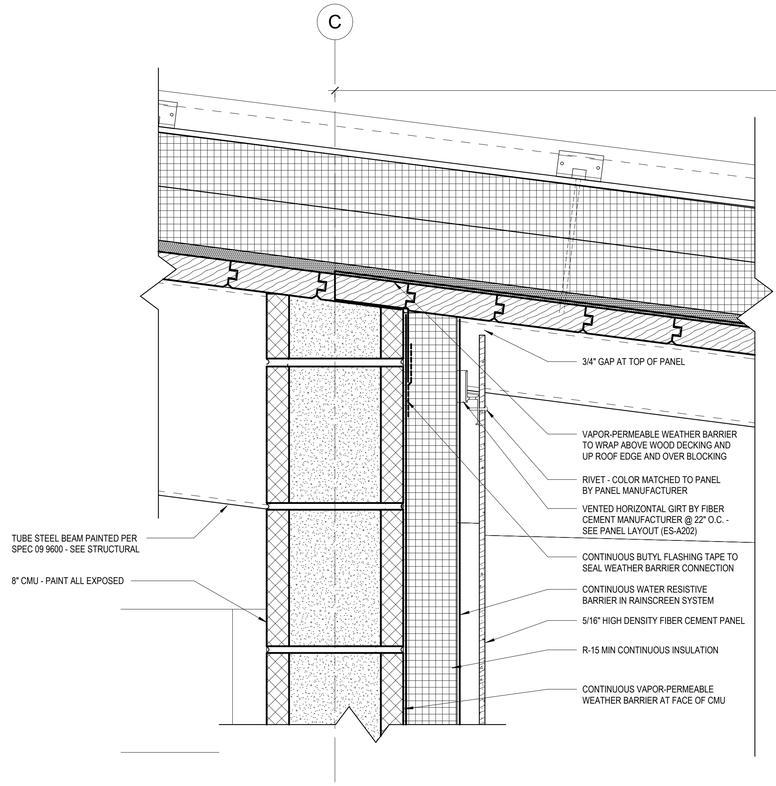

1 ES-A526 ROOF DETAIL @ LOW SIDE
3" = 1'-0"

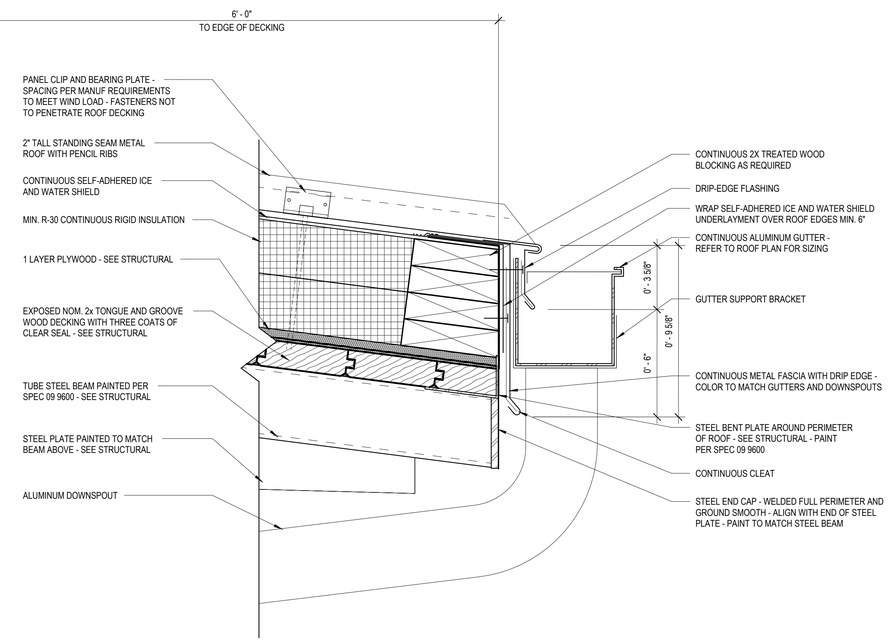

ROOF DECKING NOTES

1. STRUCTURAL WOOD ROOF DECK IS ALSO FINISHED CEILING - **NO FASTENERS SHALL PENETRATE DECKING**
2. NO EXPOSED CONDUIT SHALL BE RUN ACROSS UNDERSIDE OF WOOD DECKING WITHOUT REVIEW AND COORDINATION WITH THE ARCHITECT. COORDINATE FOR LIGHTING, SECURITY, ETC.

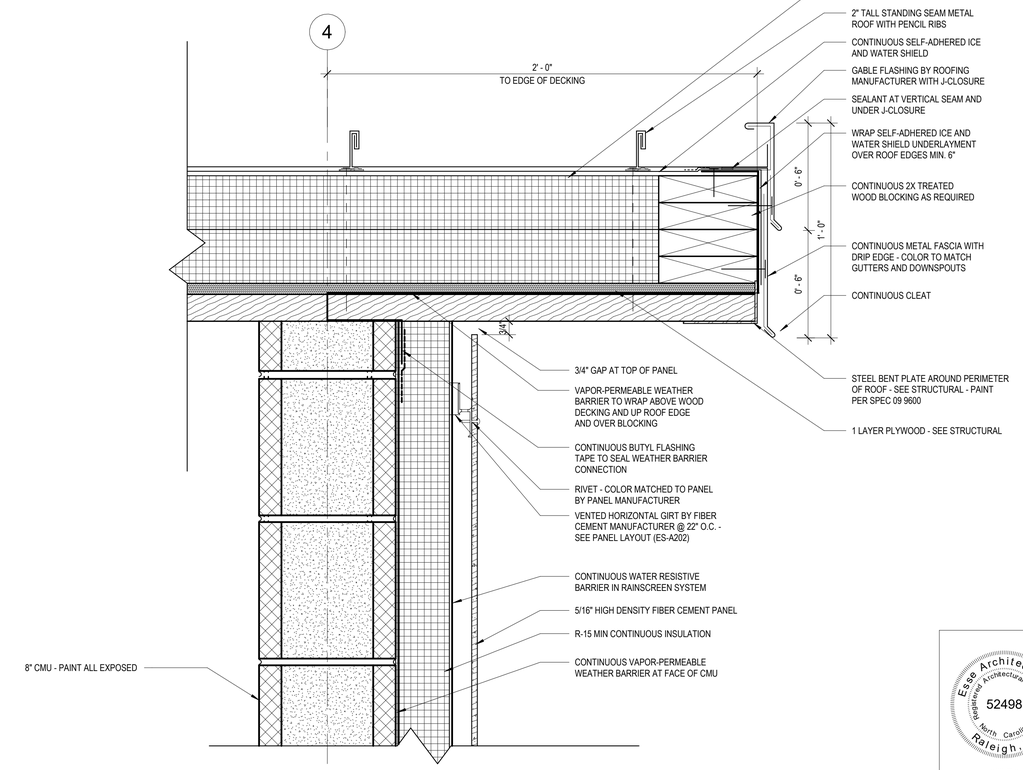

2 ES-A526 ROOF DETAIL @ SINGLE RESTROOM
3" = 1'-0"

Susan Hatchell
Landscape Architecture, PLLC
711 W. North Street, Raleigh, NC 27603
p: 919-838-9600 f: 919-838-9700

Esse Architects
830 PERSHING ROAD | RALEIGH, NORTH CAROLINA 27608

ROOF DETAILS

LAKE MYRA COUNTY PARK
Wake County, NC

REVISIONS

Esse Architects P.A. Registered Architectural Corporation 52498 Raleigh, NC North Carolina

MIRANDA DOWNER POTTHOFF Registered Architect 11663 Raleigh, NC North Carolina
Miranda Potthoff
1EC94A3A8B284BE...
7/27/2026

Date: 07/27/26

ES-A526

Docusign Envelope ID: B01E90F4-17F4-81DC-8054-9D51919BF271

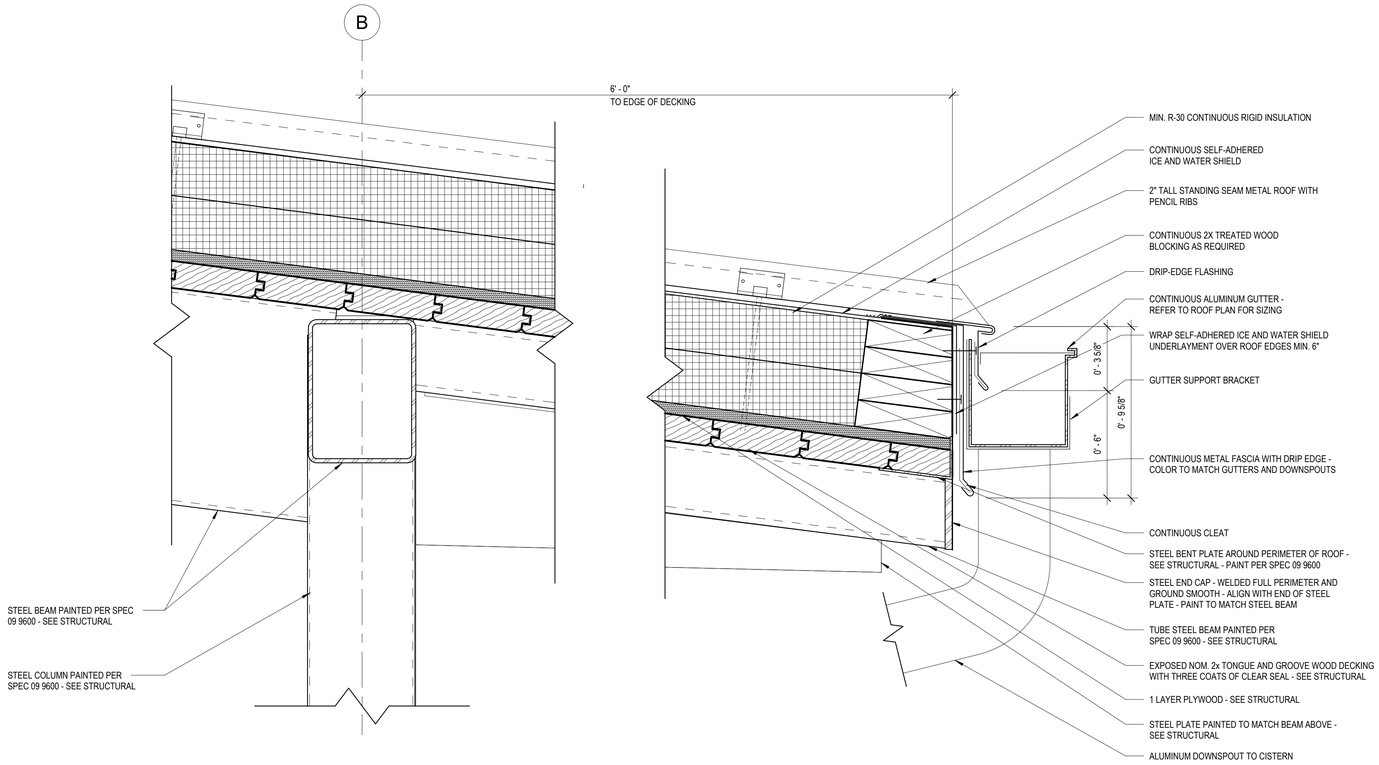

1 ES-A527 ROOF DETAIL @ LOW SIDE PICNIC SHELTER
3" = 1'-0"

ROOF DECKING NOTES

1. STRUCTURAL WOOD ROOF DECK IS ALSO FINISHED CEILING - **NO FASTENERS SHALL PENETRATE DECKING**
2. NO EXPOSED CONDUIT SHALL BE RUN ACROSS UNDERSIDE OF WOOD DECKING WITHOUT REVIEW AND COORDINATION WITH THE ARCHITECT. COORDINATE FOR LIGHTING, SECURITY, ETC.

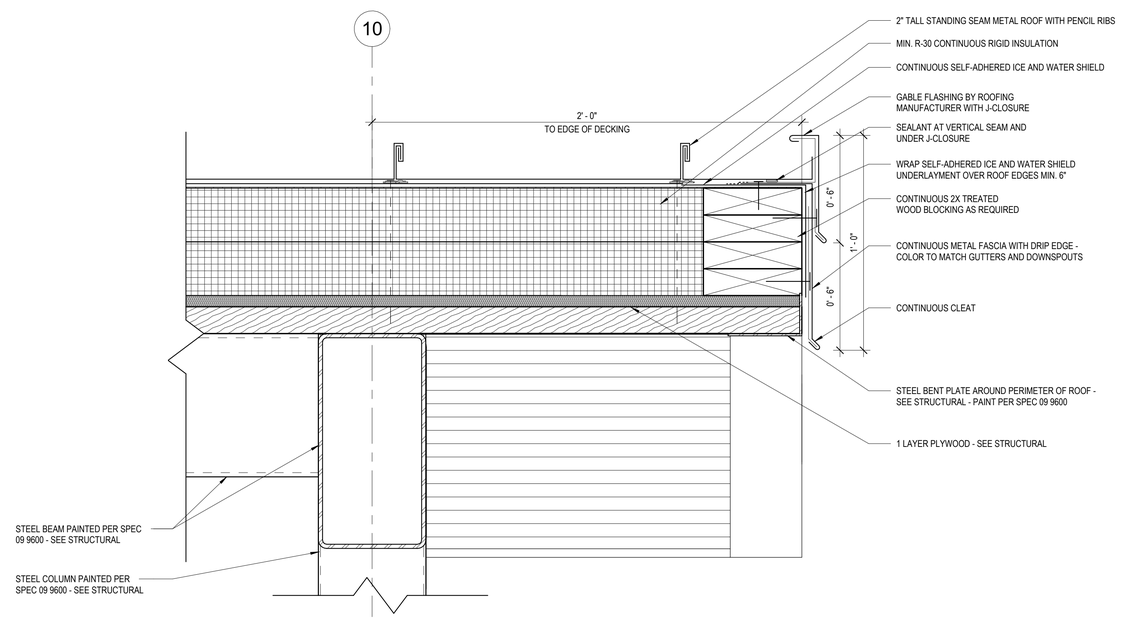

2 ES-A527 ROOF DETAIL @ PICNIC SHELTER
3" = 1'-0"

Susan Hatchell
Landscape Architecture, PLLC
711 W. North Street, Raleigh, NC 27603
p: 919-838-9600 f: 919-838-9700

Esse Architects
632 PERSHING ROAD | RALEIGH, NORTH CAROLINA 27608

ROOF DETAILS

LAKE MYRA COUNTY PARK
Wake County, NC

REVISIONS

Esse Architects P.A. Registered Architectural Corporation 52498 North Carolina Raleigh, NC

MIRANDA DONNER POTTHOFF Registered Architect 11863 North Carolina Raleigh, NC
Docusigned by: Miranda Potthoff
7/27/2026

Date: 07/27/26

ES-A527

Docusign Envelope ID: B01E90F4-17F4-81DC-8054-9D51919BF271

SHELTERS DOOR SCHEDULE

	DOOR					FRAME			DETAIL					
NUMBER	HEIGHT	WIDTH	MATERIAL	FINISH	ELEVATION	MATERIAL	FINISH	ELEVATION	HEAD	JAMB	SILL	HW Set	RATING	COMMENTS
101	7' - 0"	3' - 0"	HM	PT-5	A	HM	PT-5	1	2/ES-A601	3/ES-A601 4/ES-A601	5/ES-A601	ES - 1.0		EXTERIOR DOOR, DOOR CONTACT, ELECTRIC MORTISE TIMER LOCK
102	7' - 0"	3' - 0"	HM	PT-5	A	HM	PT-5	1	2/ES-A601	4/ES-A601	5/ES-A601	ES - 1.0		EXTERIOR DOOR, DOOR CONTACT, ELECTRIC MORTISE TIMER LOCK
103	7' - 0"	3' - 0"	HM	PT-5	A	HM	PT-5	1	2/ES-A601	2/ES-A501 4/ES-A601	5/ES-A601	ES - 1.0		EXTERIOR DOOR, DOOR CONTACT, ELECTRIC MORTISE TIMER LOCK
104	7' - 0"	3' - 0"	HM	PT-5	A	HM	PT-5	1	2/ES-A601	3/ES-A601 4/ES-A601	5/ES-A601	ES - 1.0		EXTERIOR DOOR, DOOR CONTACT, ELECTRIC MORTISE TIMER LOCK
105	7' - 0"	6' - 0"	HM	PT-3	B	HM	PT-3	2	1/ES-A601	4/ES-A601	5/ES-A601	ES - 2.0		EXTERIOR DOOR, DOOR CONTACT, PAINT TO BE SEMI-GLOSS FINISH

DOOR HARDWARE NOTES:
1. CARD READERS, DOOR CONTACTS, AND POWER SUPPLIES TO BE BY THE OWNER'S SECURITY VENDOR.
2. THE BALANCE OF DOOR HARDWARE IS IN THE GENERAL CONTRACTOR'S SCOPE.
3. THE OWNER WILL CONTROL THE LOCKED/UNLOCKED TIMING OF RESTROOM DOORS THROUGH THEIR SECURITY SYSTEM. (PREP AS THOUGH RECEIVING CARD READER, BUT NO CARD READER)

DOOR ELEVATIONS

FRAME ELEVATIONS

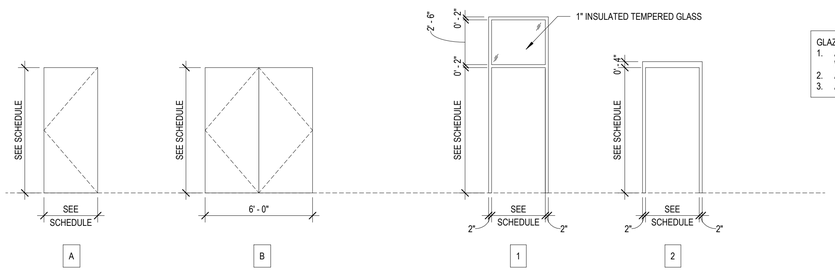

GLAZING NOTES:
1. ALL EXTERIOR GLAZING TO BE 1" INSULATED GLASS W/ LOW-E AND ARGON FILL.
2. ALL HOLLOW METAL FRAMES TO BE FIELD PAINTED
3. ALL GLASS TO BE FULLY TEMPERED.

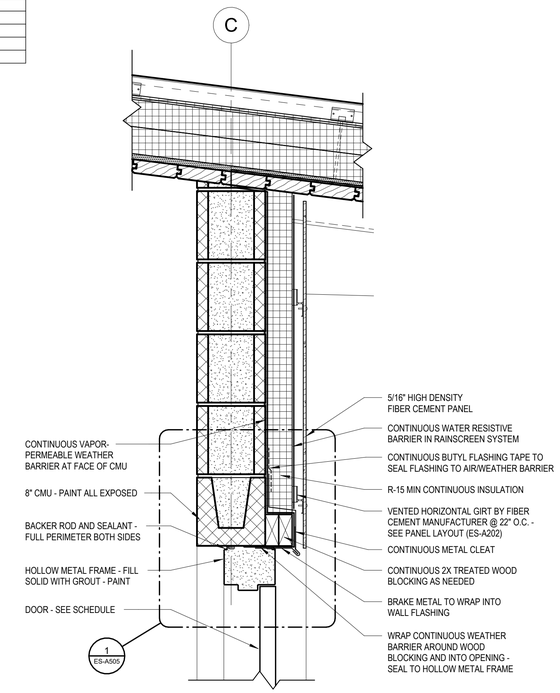

1 ES-A601 HEAD DETAIL @ CUSTODIAL DOOR
1 1/2" = 1'-0"

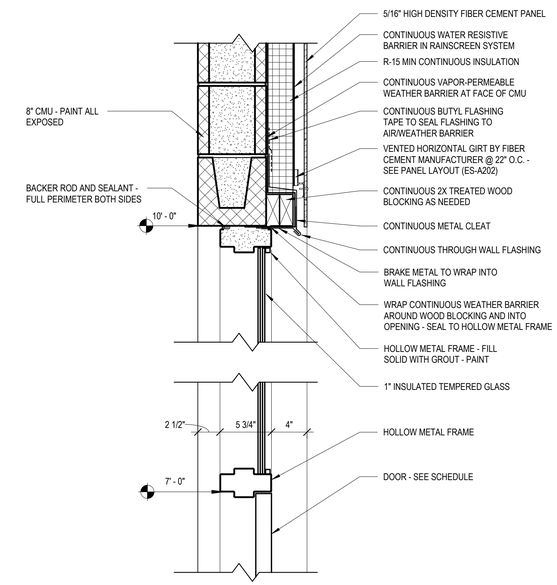

2 ES-A601 HEAD DETAIL @ TYP. RESTROOM DOOR
1 1/2" = 1'-0"

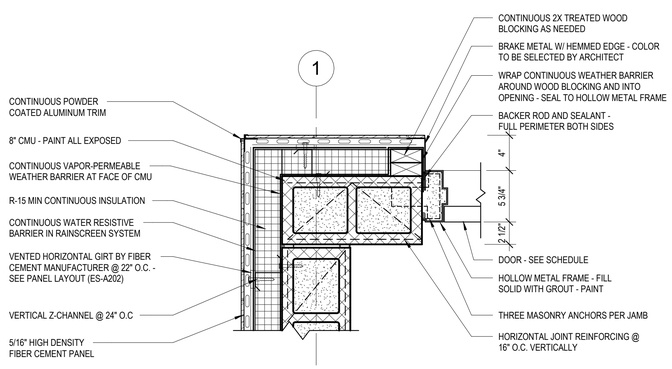

3 ES-A601 JAMB DETAIL @ OUTSIDE CORNER
1 1/2" = 1'-0"

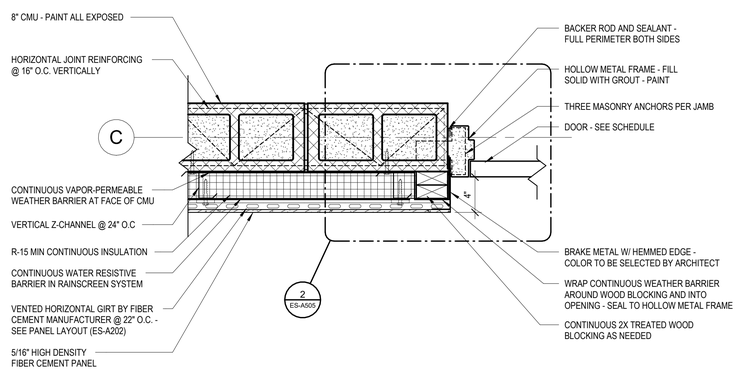

4 ES-A601 JAMB DETAIL @ TYP. SHELTER DOORS
1 1/2" = 1'-0"

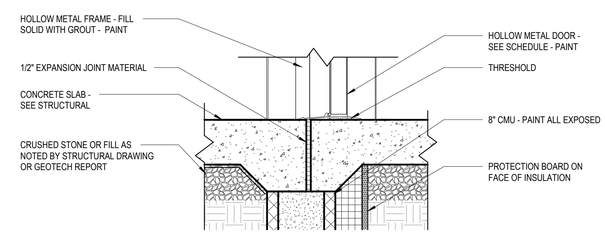

5 ES-A601 TYPICAL THRESHOLD DETAIL
1 1/2" = 1'-0"

Susan Hatchell
Landscape Architecture, PLLC
711 W. North Street, Raleigh, NC 27603
p: 919-838-9600 f: 919-838-9700

Esse Architects
630 PERSHING ROAD | RALEIGH, NORTH CAROLINA 27608

DOOR SCHEDULE

LAKE MYRA COUNTY PARK
Wake County, NC

REVISIONS

Esse Architects P.A. Registered Architectural Corporation 52498 North Carolina Raleigh, NC

MIRANDA DONNER POTTHOFF Registered Architect 11663 Licensed to practice in North Carolina Raleigh, NC 7/27/2026

Date: 07/27/26

ES-A601

GENERAL NOTES:

1. THE STRUCTURAL DRAWINGS MUST BE USED IN CONJUNCTION WITH THE ARCHITECTURAL, CIVIL, MECHANICAL, PLUMBING, AND ELECTRICAL DRAWINGS, AND THE SPECIFICATIONS. THE CONTRACTOR MUST VERIFY THE REQUIREMENTS OF OTHER TRADES AS TO SLEEVES, CHASES, HANGERS, INSERTS, ANCHORS, HOLES, AND ADDITIONAL ITEMS TO BE PLACED OR SET IN THE STRUCTURAL WORK.

2. THIS STRUCTURE HAS BEEN DESIGNED IN ACCORDANCE WITH THE PROVISIONS OF THE NORTH CAROLINA STATE BUILDING CODE, 2018 EDITION.

3. THE CONTRACTOR MUST PROVIDE TEMPORARY SHORING AND BRACING REQUIRED TO ERECT AND HOLD THE STRUCTURE IN PROPER ALIGNMENT UNTIL PERMANENT SUPPORTS AND LATERAL BRACING ARE IN PLACE.

4. DISCREPANCIES WITHIN DRAWINGS, BETWEEN THE SPECIFICATIONS AND THE DRAWINGS, OR WITHIN THE SPECIFICATIONS, MUST BE BROUGHT TO THE ATTENTION OF THE ARCHITECT AND ENGINEER DURING THE BIDDING PROCESS IN TIME TO PERMIT CLARIFICATION BY ADDENDUM. IF INCONSISTENCIES, DISCREPANCIES OR CONTRADICTIONS IN THE CONTRACT DOCUMENTS ARE DISCOVERED AFTER THE CLOSE OF BIDDING QUESTIONS, THE CONTRACTOR MUST BE DEEMED BY SUBMITTAL OF THEIR BID, TO HAVE BID THE MOST COSTLY AS TO LABOR, MATERIALS, DURATION, SEQUENCE AND METHOD OF CONSTRUCTION TO PROVIDE THE WORK.

5. THESE STRUCTURAL DRAWINGS ARE ISSUED ON THE DATE INDICATED FOR THE PURPOSE DESIGNATED. THESE DRAWINGS MUST NOT BE ISSUED OR RELEASED FOR ANY OTHER PURPOSE WITHOUT THE WRITTEN AUTHORIZATION OF THE STRUCTURAL ENGINEER OF RECORD.

6. DETAILS LABELED "TYPICAL DETAIL" WITHIN THE DOCUMENTS APPLY TO SITUATIONS ON THE PROJECT THAT MAY OCCUR THROUGHOUT THE PROJECT. SUCH DETAILS APPLY WHETHER OR NOT THE DETAIL IS SPECIFICALLY REFERENCED AT EACH INSTANCE. NOTIFY ENGINEER IF CLARIFICATIONS ARE REQUIRED REGARDING THE APPLICABILITY OF THE "TYPICAL DETAIL."

7. DESIGN CRITERIA:

CLASSIFICATION OF BUILDING
- RISK CATEGORY II

SUPERIMPOSED ROOF DEAD LOADS - UNIFORM:
- INSULATION AND ROOF MEMBRANE . . . . . 3 PSF
- CEILING . . . . . 2 PSF
- DUCTS, LIGHTS, MISC. MECHANICAL . . . . . 3 PSF
- SOLAR PANEL ALLOWANCE . . . . . 10 PSF

SUPERIMPOSED FLOOR DEAD LOADS - UNIFORM:
- FLOOR FINISH . . . . . 3 PSF
- CEILING . . . . . 2 PSF
- DUCTS, LIGHTS, MISC. MECHANICAL . . . . . 3 PSF

LIVE LOADS - UNIFORM:
- SLAB ON GRADE . . . . . 100 PSF
- FLOOR . . . . . 80 PSF
- ROOF . . . . . 20 PSF
- CLASSROOMS . . . . . 40 PSF
- OFFICES . . . . . 50 PSF
- PARTITION ALLOWANCE . . . . . 15 PSF
- BALCONIES AND DECKS . . . . . 100 PSF

- STORAGE . . . . . 125 PSF
- MECHANICAL SPACE . . . . . 150 PSF
- STAIRWAYS . . . . . 100 PSF

LIVE LOAD REDUCTION OF THE UNIFORMLY DISTRIBUTED FLOOR LIVE LOADS HAS BEEN UTILIZED WHERE PERMITTED BY CODE.

LIVE LOADS - CONCENTRATED:
- ROOFS . . . . . 300#

UNLESS OTHERWISE NOTED, CONCENTRATED LOADS ARE APPLIED UNIFORMLY OVER 2'-6" x 2'-6" AREA.

RAIN LOADS:
- RAIN INTENSITY (15 MINUTE) . . . . . 6.21 IN/HR

SNOW LOADS:
- GROUND SNOW LOAD (Pg) . . . . . 15 PSF
- SLOPED ROOF LOAD (Pf) . . . . . 11 PSF
- IMPORTANCE FACTOR (Is) 1.0
- THERMAL FACTOR (Ct) 1.0
- EXPOSURE FACTOR (Ce) 1.0
- DRIFT SURCHARGE (Pd) . . . . . REF PLAN

GENERAL NOTES (CONT):

WIND LOADS:
- BASIC WIND SPEED (Vult) . . . . . 116 MPH
- ALLOWABLE STRESS DESIGN WIND SPEED (Vasd) . . . . . 90 MPH
- EXPOSURE CATEGORY . . . . . B
- INTERNAL PRESSURE COEFFICIENT . . . . . ±0.18
- COMPONENT AND CLADDING PRESSURES:
  - WALLS, ZONE 5 (10 SF) . . . . . 29 PSF
  - ROOF, ZONE 3 (10 SF) . . . . . 56 PSF
- ULTIMATE WIND BASE SHEARS (FOR MWFRS):
  - Vx . . . . . 11 KIPS
  - Vy . . . . . 16 KIPS

SEISMIC LOADS:
- SITE CLASSIFICATION . . . . . D
- SEISMIC DESIGN CATEGORY . . . . . B
- IMPORTANCE FACTOR (IE) 1.0
- SPECTRAL RESPONSE ACCELERATIONS:
  - S_S . . . . . 0.149 S_1 . . . . . 0.057
  - S_{MS} . . . . . 0.146 S_{M1} 0.085
  - S_{DS} . . . . . 0.097 S_{D1} 0.057
- ANALYSIS PROCEDURE . . . . . EQUIVALENT LATERAL FORCE

LATERAL FORCE RESISTING SYSTEM

- STEEL SYSTEMS NOT SPECIFICALLY DETAILED FOR SEISMIC REISTANCE . . . . . R=3
- RESPONSE MODIFICATION COEFFICIENT (R) 3.0
- SEISMIC RESPONSE COEFFICIENT (Cs) 0.05
- ULTIMATE SEISMIC BASE SHEAR (V) . . . . . 4 KIPS

LATERAL DESIGN CONTROL
- CONTROLLING LATERAL LOADS . . . . . WIND

SHOP DRAWINGS AND SUBMITTALS:

1. SHOP DRAWINGS AND SUBMITTALS MUST BEAR THE CONTRACTOR'S REVIEW STAMP WITH CHECKER'S INITIALS BEFORE BEING SUBMITTED TO THE ARCHITECT FOR APPROVAL.

2. WHEN THE CONTRACTOR HAS BEEN AUTHORIZED TO USE THE ARCHITECT'S AND / OR ENGINEER'S DRAWINGS AS SHOP DRAWINGS, THE CONTRACTOR MUST REMOVE ALL TITLE BLOCKS, PROFESSIONAL SEALS, AND ANY OTHER REFERENCE TO THE ARCHITECT AND / OR ENGINEER FROM THAT SHOP DRAWING.

SITE PREPARATION, CONTROLLED FILL AND SURCHARGE NOTES:

1. OBTAIN AND BECOME THOROUGHLY FAMILIAR WITH THE CONDITIONS AND RECOMMENDATIONS DESCRIBED IN THE SUBSURFACE EXPLORATION AND GEOTECHNICAL ENGINEERING REPORT. THIS REPORT IS NOT A PART OF THE CONTRACT DOCUMENTS, AND MAY NOT BE REPRESENTATIVE OF ALL SITE CONDITIONS WHICH MAY BE ENCOUNTERED.

2. SITE PREPARATION AND CONTROLLED FILL MUST INCLUDE THE AREA ENCLOSED BY A LINE DRAWN 5 FEET OUTSIDE THE BUILDING FOOTPRINT.

3. REMOVE ALL VEGETATION, ROOT MAT, TOPSOIL, ASPHALT PAVING AND AGGREGATE BASE MATERIAL. BASE BID ON 10 INCHES AVERAGE DEPTH.

4. THE EXPOSED SUBGRADE MUST BE PROOFROLLED WITH A LARGE RUBBER-TIRED ROLLER OR LOADED DUMP TRUCK; PERFORM AT LEAST TWO PASSES IN EACH OF TWO PERPENDICULAR DIRECTIONS.

5. EXCAVATE SOFT SPOTS REVEALED BY PROOFROLLING AS DIRECTED.

6. PRIOR TO PLACEMENT OF ANY FILL MATERIAL, SETTLEMENT PLATES MUST BE INSTALLED ON THE PREPARED SUBGRADE. SEE PLAN FOR LOCATIONS AND DETAILS.

7. FILL WITH SATISFACTORY STRUCTURAL FILL MATERIALS TO THE SPECIFIED ELEVATIONS.

8. FILL MUST BE PLACED IN LOOSE LIFTS NOT EXCEEDING 8 INCHES, WHEN MECHANICAL COMPACTION EQUIPMENT IS USED OR 4 INCHES WHEN HAND COMPACTION EQUIPMENT IS USED AND MUST BE COMPACTED TO AT LEAST 95 PERCENT OF THE STANDARD PROCTOR MAXIMUM DRY DENSITY (ASTM D698).

9. PLACE SURCHARGE FILL IN ONE FOOT LOOSE LIFTS, UP TO THE SPECIFIED ELEVATION. THE DEPTH OF SURCHARGE IS BASED ON A SOIL UNIT WEIGHT OF 120 POUNDS PER CUBIC FOOT. FOR LESS DENSE MATERIALS, PROVIDE ADDITIONAL SURCHARGE OR PROVIDE COMPACTION AS REQUIRED TO YIELD THE EQUIVALENT TOTAL WEIGHT OF SURCHARGE.

10. THE CONTRACTOR MUST SECURE AND PAY FOR THE SERVICES OF A LICENSED LAND SURVEYOR TO MONITOR THE SETTLEMENT PLATES. ELEVATION READINGS MUST BE TAKEN ON THE SURFACE OF THE PLATE AND THE TOP OF THE BAR AT THE TIME OF INSTALLATION. SUBSEQUENT READINGS MUST BE OBTAINED ON TOP OF THE BAR A MINIMUM OF THREE TIMES PER WEEK DURING THE PLACEMENT OF ANY FILL, TWO TIMES PER WEEK FOR A PERIOD OF TWO WEEKS AFTER COMPLETION OF FILL, AND ONE TIME PER WEEK THEREAFTER.

11. DURATION OF THE READINGS MUST BE ASSUMED TO BE 90 DAYS AFTER COMPLETION OF THE FILL. SUBMIT ELEVATION READINGS TO THE [ARCHITECT] [ENGINEER] [CONTRACTING OFFICER] ON A WEEKLY BASIS.

FOUNDATION NOTES:

1. FOUNDATIONS HAVE BEEN DESIGNED IN ACCORDANCE WITH THE RECOMMENDATIONS IN THE [SUBSURFACE EXPLORATION AND GEOTECHNICAL ENGINEERING REPORT PREPARED BY ESP ASSOCIATES, INC., DATED AUGUST 29, 2025.

2. FOUNDATIONS HAVE BEEN DESIGNED FOR A NET ALLOWABLE SOIL BEARING PRESSURE OF 2,000 PSF.

3. TOP OF FOOTING ELEVATIONS MUST BE A MINIMUM DEPTH OF 1'-0" BELOW LOWEST ADJACENT SOIL GRADE.

4. PRIOR TO PLACING FOUNDATION CONCRETE, ALL FOUNDATION EXCAVATIONS MUST BE INSPECTED BY THE OWNER'S GEOTECHNICAL TESTING AGENCY [SPECIAL INSPECTOR] TO EXPLORE THE EXTENT OF LOOSE, SOFT, EXPANSIVE, OR OTHERWISE UNSATISFACTORY SOIL MATERIAL AND TO VERIFY DESIGN BEARING PRESSURE. DIRECTION FOR CORRECTIVE ACTION WILL BE PROVIDED BY THE OWNER'S GEOTECHNICAL TESTING AGENCY [SPECIAL INSPECTOR] WHERE UNSATISFACTORY SOILS ARE PRESENT.

5. NO UNBALANCED BACKFILLING MUST BE DONE AGAINST MASONRY OR CONCRETE WALLS UNLESS WALLS ARE SECURELY BRACED AGAINST OVERTURNING, EITHER BY TEMPORARY CONSTRUCTION BRACING OR BY PERMANENT CONSTRUCTION.

6. CONTROL GROUNDWATER AND SURFACE RUNOFF THROUGHOUT THE CONSTRUCTION PROCESS. INUNDATION AND LONG TERM EXPOSURE OF BEARING SURFACES WHICH RESULT IN DETERIORATION OF BEARING MUST BE PREVENTED.

CAST-IN-PLACE CONCRETE NOTES:

1. CONCRETE MUST BE IN ACCORDANCE WITH AMERICAN CONCRETE INSTITUTE (ACI) 301 AND 318.

2. CONCRETE MUST BE NORMAL WEIGHT UNLESS OTHERWISE DENOTED AS LW (LIGHTWEIGHT) AND MUST OBTAIN 28 DAY COMPRESSIVE STRENGTHS AS FOLLOWS:
   - A. SLAB-ON-GRADE ..... 3,500 PSI
   - B. COLUMNS AND WALLS..... 4,000 PSI
   - C. CONCRETE NOT OTHERWISE NOTED..... 3,000 PSI

3. REINFORCING MATERIALS MUST BE AS FOLLOWS:
   - A. REINFORCING BARS - ASTM A615, GRADE 60, DEFORMED.
   - B. WELDED REINFORCING BARS - ASTM A706, GRADE 60.
   - C. WELDED WIRE REINFORCEMENT - ASTM A1064, WELDED STEEL WIRE REINFORCEMENT; PROVIDE SHEET TYPE, ROLL TYPE IS NOT ACCEPTABLE.

4. ALL REINFORCING STEEL AND EMBEDDED ITEMS SUCH AS ANCHOR RODS AND WELD PLATES MUST BE ACCURATELY PLACED AND ADEQUATELY TIED AND SUPPORTED BEFORE CONCRETE IS PLACED TO PREVENT DISPLACEMENT BEYOND PERMITTED TOLERANCES.

5. CONCRETE COVER TO REINFORCING STEEL MUST EQUAL THE FOLLOWING, UNLESS OTHERWISE NOTED:
   - A. SURFACES AGAINST EARTH ..... 3"
   - B. SURFACES NOT CAST AGAINST EARTH, BUT EXPOSED TO EARTH OR WEATHER IN THE FINAL CONDITION
     - #5 AND SMALLER ..... 1 1/2"
     - #6 AND LARGER ..... 2"
   - C. BEAMS, GIRDERS, COLUMNS, AND WALLS ABOVE FINISHED FIRST FLOOR ..... 1 1/2"
   - D. ELEVATED SLABS ..... 3/4"

6. LAP CONTINUOUS REINFORCING STEEL 57 X BAR DIAMETER, TYPICAL UNLESS OTHERWISE NOTED.

7. LAP CONTINUOUS REINFORCING STEEL PER SCHEDULES AND TYPICAL DETAILS.

8. DO NOT EMBED CONDUIT AND PIPING IN OR PENETRATE THROUGH CAST-IN-PLACE CONCRETE ELEMENTS UNLESS OTHER NOTED.

CONCRETE MIX DESIGN NOTES:

1. MIX DESIGNS COMPRESSIVE STRENGTHS (f'c) BASED ON 28 DAY DESIGN STRENGTH, UNLESS OTHERWISE NOTED.

2. CONCRETE NOT OTHERWISE NOTED:
   - A. MINIMUM COMPRESSIVE STRENGTH (f'c) = 4000 PSI

3. FOUNDATIONS (SPREAD FOOTINGS, MAT FOOTINGS):
   - A. EXPOSURE CLASS = ACI 318 F0, S0, W0, C1
   - B. MINIMUM COMPRESSIVE STRENGTH (f'c) = 3,000PSI
   - C. MAXIMUM W/CM = 0.5
   - D. BLENDED HYDRAULIC CEMENT = ASTM C595 TYPE 1L
   - E. SLUMP = 5" MAX PLUS OR MINUS 1", OR 8" MAX, PLUS OR MINUS 1" FOR CONCRETE WITH A VERIFIED SLUMP OF 3" PLUS OR MINUS 1" BEFORE ADDING HIGH-RANGE WATER-REDUCING OR PLASTICIZING ADMIXTURE
   - F. AIR CONTENT = NO REQUIREMENTS
   - G. AGGREGATE = NORMAL WEIGHT, ¾" NOMINAL
   - H. LIMIT WATER-SOLUBLE, CHLORIDE-ION CONTENT IN HARDENED CONCRETE TO 0.1 PERCENT BY WEIGHT OF CEMENT

4. INTERIOR FLOOR SLAB-ON-GRADE:
   - A. EXPOSURE CLASS = ACI 318 F0, S0, W0, C0
   - B. MINIMUM COMPRESSIVE STRENGTH (f'c) = 3,500PSI
   - C. MAXIMUM W/CM = 0.5
   - D. BLENDED HYDRAULIC CEMENT = ASTM C595 TYPE 1L
   - E. SLUMP = 5" MAX PLUS OR MINUS 1", OR 8" MAX, PLUS OR MINUS 1" FOR CONCRETE WITH A VERIFIED SLUMP OF 3" PLUS OR MINUS 1" BEFORE ADDING HIGH-RANGE WATER-REDUCING OR PLASTICIZING ADMIXTURE
   - F. AIR CONTENT = DO NOT ALLOW AIR CONTENT IN TROWEL FINISHED FLOORS TO EXCEED 3%
   - G. AGGREGATE = NORMAL WEIGHT, ¾" NOMINAL
   - H. LIMIT WATER-SOLUBLE, CHLORIDE-ION CONTENT IN HARDENED CONCRETE TO 0.3 PERCENT BY WEIGHT OF CEMENT

Susan Hatchell
Landscape Architecture, PLLC
711 W. North Street, Raleigh, NC 27603
p: 919-838-9600 f: 919-838-9700

lynchmykins now IMEG
301 N WEST STREET, SUITE 105
RALEIGH, NC 27603
919.782.1833 www.imegcorp.com

GENERAL NOTES

LAKE MYRA COUNTY PARK
Wake County, NC

NORTH CAROLINA PROFESSIONAL SEAL 044996 ENGINEER SCOTT M. FRANCIS
07/27/2026

REVISIONS

lynchmykins now IMEG
301 N WEST STREET, SUITE 105
RALEIGH, NC 27603
919.782.1833 www.imegcorp.com

IMEG RESERVES PROPRIETARY RIGHTS, INCLUDING COPYRIGHTS, TO THIS DRAWING AND THE DATA SHOWN THEREON. SAID DRAWING AND/OR DATA ARE THE EXCLUSIVE PROPERTY OF IMEG AND SHALL NOT BE USED OR REPRODUCED FOR ANY OTHER PROJECT WITHOUT THE EXPRESS WRITTEN APPROVAL AND PARTICIPATION OF IMEG. ©2025 IMEG CONSULTANTS CORP.

North Carolina Design Registration #F-1507

Date07/27/2026

ES-S001

CONCRETE MASONRY NOTES:

1. CONCRETE MASONRY MATERIALS AND CONSTRUCTION MUST CONFORM TO THE AMERICAN CONCRETE INSTITUTE (ACI) "BUILDING CODE REQUIREMENTS FOR MASONRY STRUCTURES" (TMS 402 / ACI 530 / ASCE 5) AND "SPECIFICATIONS FOR MASONRY STRUCTURES" (TMS 602 / ACI 530.1 / ASCE 6).

2. CONCRETE MASONRY UNITS MUST CONFORM TO ASTM C90 AND MUST BE MADE WITH NORMAL WEIGHT AGGREGATE.

3. COMPRESSIVE STRENGTH OF MASONRY MUST BE DETERMINED BY THE UNIT STRENGTH METHOD AS SET FORTH IN ACI 530.1. THE NET AREA COMPRESSIVE STRENGTH OF MASONRY, f'm, MUST BE 2,000 PSI AT 28 DAYS.

4. MORTAR MUST BE TYPE 'M' OR 'S' AND MUST COMPLY WITH ASTM C270, PROPORTIONS OR PROPERTIES SPECIFICATION.

5. GROUT MUST COMPLY WITH EITHER THE PROPORTIONS OR PROPERTIES SPECIFICATION OF ASTM C476 AND AS FOLLOWS:
   A. PROPORTIONS SPECIFICATION: THIS MIX CANNOT CONTAIN ADMIXTURES. WATER MUST BE ADDED IN THE FIELD IN ORDER TO ACHIEVE A SLUMP OF 8-11 INCHES WHEN PLACED IN THE CONCRETE MASONRY UNITS. MORTAR, PEA-GRAVEL CONCRETE, OR "CHAT" MIXES ARE NOT ACCEPTABLE SUBSTITUTES FOR THE SPECIFIED GROUT.
   B. PROPERTIES SPECIFICATION: THIS MIX MUST BE PROPORTIONED TO OBTAIN A DOCUMENTED 28 DAY COMPRESSIVE STRENGTH OF 2,500 PSI, WITH 3/8" MAX AGGREGATE AND AN 8-11 INCH SLUMP WHEN PLACED IN THE CONCRETE MASONRY UNITS.

6. REINFORCING STEEL MUST COMPLY WITH ASTM A615, GRADE 60. SHOP FABRICATE REINFORCING BARS WHICH ARE SHOWN TO BE BENT OR HOOKED.

7. ALL BOND BEAMS, REINFORCED CELLS AND CELLS WITH EXPANSION BOLTS, EMBED PLATES OR OTHER ANCHORS AND ALL CELLS BELOW GRADE MUST BE GROUTED SOLID. GROUT PROCEDURE MUST COMPLY WITH ACI 530.1.

8. ALL CMU WALLS MUST BE REINFORCED CONTINUOUSLY FROM FOUNDATION TO TOP OF WALL. WHERE REINFORCING IS INTERRUPTED, OFFSET AND LAP ADDITIONAL BARS PER THE "TYPICAL OFFSET SPLICE AT MASONRY WALL DETAILS."

9. LAP ALL REINFORCING PER SCHEDULE BELOW, TYPICAL UNLESS OTHERWISE NOTED:

MASONRY LAP SCHEDULE

REINF SIZE	52 x BAR DIAMETER	72 x BAR DIAMETER
#4	26"	36"
#5	33"	45"
#6	39"	54"
#7	46"	63"
#8	52"	72"

10. PROVIDE MECHANICAL SPLICES FOR ALL #9 BARS AND LARGER AND FOR ALL BARS AT CONTRACTOR'S OPTION.

11. PROVIDE REINFORCING STEEL DOWELS OF THE SAME SIZE AND SPACING AS VERTICAL REINFORCING FROM THE SUPPORTING STRUCTURE. DOWELS MUST HAVE STANDARD ACI HOOKS.

12. PROVIDE STANDARD 9 GAGE TRUSS TYPE HORIZONTAL JOINT REINFORCING IN CMU WALLS AT 16 INCHES ON-CENTER VERTICALLY AND AT 8 INCHES ON-CENTER VERTICALLY AT PARAPETS. ADDITIONALLY PROVIDE IN THE TWO JOINTS IMMEDIATELY ABOVE AND BELOW ALL OPENINGS, EXTENDING A MINIMUM OF 2 FEET BEYOND THE JAMB ON EACH SIDE OF THE OPENING, EXCEPT AT CONTROL JOINTS.

13. PROVIDE VERTICAL CONTROL JOINTS AT 25 FEET ON-CENTER MAXIMUM, OR NOT MORE THAN 1.5 TIMES THE HEIGHT OF THE WALL AT CONTROL JOINTS. PROVIDE CONTINUOUS HORIZONTAL BOND BEAM REINFORCEMENT AS SHOWN IN THE SECTIONS AND DETAILS CONTINUOUS THROUGH CONTROL JOINTS. DO NOT PLACE GROUT CONTINUOUSLY AT CONTROL JOINTS.

14. DO NOT LOCATE CONTROL JOINTS WITHIN TWO FEET OF STEEL BEAM BEARING LOCATIONS.

15. PLACE GROUT WITH POUR HEIGHT NOT EXCEEDING 5 FEET. CONSOLIDATE EACH POUR BY MECHANICAL VIBRATION. RECONSOLIDATE AFTER INITIAL WATER LOSS AND SETTLEMENT OCCUR.

CONCRETE MASONRY NOTES (CONT):

19. GROUT POUR HEIGHT MAY BE INCREASED WHERE THE FOLLOWING CONDITIONS ARE MET:
   A. LIMIT POUR HEIGHT BASED ON A MINIMUM WIDTH OF GROUT SPACE IN ACCORDANCE WITH TABLE 7 OF ACI 530.1 / ASCE 6 / TMS 602.
   B. PLACE GROUT IN LIFTS NOT EXCEEDING THE LIMITATIONS SPECIFIED IN ACE 530.1/ASCE 6/TMS 602.
   C. CONSOLIDATE EACH POUR BY MECHANICAL VIBRATION. RECONSOLIDATE AFTER INITIAL WATER LOSS AND SETTLEMENT HAS OCCURRED.
   D. FORM A GROUT KEY BETWEEN POURS ACCORDING TO ACI 530.1 / ASCE 6 / TMS 602.
   E. PROVIDE AN INSPECTION PORT (CLEANOUT) AT EACH CELL TO BE GROUTED AT THE BASE OF EACH POUR.
   F. SUBMIT SHOP DRAWINGS DETAILING THE PROPOSED GROUTING PROCEDURE ALONG WITH (3) REFERENCES OF PREVIOUS SUCCESSFUL PROJECTS.

20. MASONRY SHALL BE CONSTRUCTED IN RUNNING BOND PATTERN AND ALL CORNERS TO BE TIED BY MASONRY BOND.

21. SUBMITTALS FOR CONCRETE MASONRY MUST INCLUDE THE FOLLOWING:
   A. PRODUCT DATA/MATERIAL CERTIFICATES: SUBMIT DATA AND CERTIFICATES FOR MASONRY UNITS, CEMENTITIOUS MATERIALS, MORTAR ADMIXTURES, PRE-BLENDED DRY MORTAR MIXES, REINFORCING BARS, JOINT REINFORCEMENT, ANCHORS, TIES, AND METAL ACCESSORIES.
   B. REINFORCEMENT SHOP DRAWINGS: SHOW ELEVATIONS OF REINFORCED WALLS. MUST COMPLY WITH ACI DETAILING MANUAL: DETAIL BENDING, LAP LENGTHS, AND PLACEMENT OF UNIT MASONRY REINFORCING BARS.
   C. MIX DESIGNS: SUBMIT MIX DESIGNS FOR EACH TYPE OF MORTAR AND GROUT AND INCLUDE DESCRIPTION OF TYPE AND PROPORTIONS OF INGREDIENTS. INCLUDE TEST REPORTS FOR GROUT MIXES ACCORDING TO ASTM C1019
   D. SHOP DRAWINGS MUST INDICATE THE DATE OF THE STRUCTURAL DRAWINGS THAT WERE USED IN PREPARATION.

STRUCTURAL STEEL NOTES:

1. STRUCTURAL STEEL MUST BE IN ACCORDANCE WITH THE AMERICAN INSTITUTE OF STEEL CONSTRUCTION (AISC) 360.

2. STRUCTURAL STEEL FABRICATOR MUST PARTICIPATE IN THE AISC QUALITY CERTIFICATION PROGRAM AND BE A DESIGNATED AISC-CERTIFIED PLANT.

3. STRUCTURAL STEEL INSTALLER MUST PARTICIPATE IN THE AISC QUALITY CERTIFICATION PROGRAM AND BE A DESIGNATED AISC-CERTIFIED ERECTOR.

4. STRUCTURAL STEEL MUST COMPLY WITH THE FOLLOWING SPECIFICATIONS:
   A. STRUCTURAL STEEL SHAPES, PLATES AND BARS UNLESS OTHERWISE NOTED - ASTM A572, Fy = 50 KSI
   B. STRUCTURAL STEEL W-SHAPES - ASTM A992, Fy = 50 KSI
   C. HOLLOW STRUCTURAL SECTIONS (HSS):
      a. SQUARE & RECTANGULAR - ASTM A500, GRADE C, Fy = 50 KSI
      b. ROUND - ASTM A500, GRADE C, Fy = 46 KSI
   D. ANCHOR RODS - ASTM F1554, GRADE [36] [55]
   E. HIGH STRENGTH BOLTS - ASTM F3125, TYPE A325 (TYPICAL UON)
   F. FULLY PRETENSIONED BOLTS - ASTM F1852 (TWIST-OFF TYPE)
   G. WASHERS - ASTM F436
   H. NUTS - ASTM A563
   I. HEADED STUDS - ASTM A29, GRADE 1010 THROUGH 1020

5. UNLESS OTHERWISE NOTED, ALL REQUIRED DESIGN STRENGTHS AND REACTIONS INDICATED ARE BASED ON THE "LOADING COMBINATIONS USING STRENGTH DESIGN OR LOAD AND RESISTANCE FACTOR DESIGN" PER SECTION 1605.2 OF THE BUILDING CODE.

6. STRUCTURAL STEEL FRAME IS CONSIDERED AS UNRESTRAINED FOR FIRE PROTECTION PURPOSES.

7. ALL STEEL CONNECTIONS AND MEMBER REINFORCEMENT MUST BE DESIGNED BY FABRICATOR'S QUALIFIED PROFESSIONAL ENGINEER FOR LOADS INDICATED ON THE DRAWINGS, PER OPTION 3B OF ANSI/AISC 303 AND COMPLETE THE FOLLOWING:

   A. SUBMIT STRUCTURAL CALCULATIONS SIGNED AND SEALED BY THE QUALIFIED PROFESSIONAL ENGINEER REGISTERED IN THE NORTH CAROLINA RESPONSIBLE FOR THEIR PREPARATION.
   B. THE PROFESSIONAL ENGINEER RESPONSIBLE FOR CONNECTION DESIGN MUST REVIEW THE SHOP DRAWINGS PRIOR TO SUBMITTAL TO VERIFY THAT THE CONNECTIONS AS DETAILED ON THE SHOP DRAWINGS COMPLY WITH THE CONNECTION DESIGN REQUIREMENTS OF THE FINAL CALCULATIONS.
   C. A REVIEW LETTER, SIGNED AND SEALED BY THE PROFESSIONAL ENGINEER RESPONSIBLE FOR CONNECTION DESIGN MUST BE PROVIDED WITH THE SHOP DRAWINGS AND CALCULATION SUBMITTAL STATING THAT THIS REVIEW AND VERIFICATION HAS BEEN COMPLETED.

8. HIGH STRENGTH BOLTS MAY BE TIGHTENED TO THE "SNUG TIGHT" CONDITION, UNLESS OTHERWISE NOTED.

9. BOLTED CONNECTIONS MAY USE NON-STANDARD HOLES, EXCEPT IN THE FOLLOWING LOCATIONS:

   A. AXIAL CONNECTIONS IDENTIFIED ON PLAN.
   B. ALL FRAMING CONNECTIONS AT BRACED FRAMES AND MOMENT FRAMES.
   C. CONNECTIONS IDENTIFIED ON PLAN WITH FULL DEPTH STIFFENER PLATES.

STRUCTURAL STEEL NOTES (CONT):

10. PROVIDE ANGLE FRAMING AROUND OPENINGS LARGER THAN 6 INCHES IN ANY DIMENSION (INCLUDING ROOF DRAINS) TO SUPPORT STEEL DECK. REFERENCE PLANS AND TYPICAL DETAILS FOR SIZING REQUIREMENTS.

11. WELDING MUST BE IN ACCORDANCE WITH AWS D1.1, "STRUCTURAL WELDING CODE - STEEL." WELD ELECTRODES MUST BE E70XX LOW HYDROGEN. UNLESS OTHERWISE NOTED, PROVIDE CONTINUOUS FILLET WELDS WITH MINIMUM SIZE REQUIRED BY TABLE J2.4 AISC 360.

12. INSTALLATION OF HEADED COMPOSITE STUDS MUST CONFORM TO THE REQUIREMENTS OF AWS D1.1, SECTIONS 9.4 AND 9.5. HEADED COMPOSITE STUDS MUST BE TESTED IN ACCORDANCE WITH AWS D1.1, SECTIONS 9.6, 9.7, AND 9.8 BY A QUALIFIED TESTING AGENCY.

13. COORDINATE ALL MEMBER LOCATIONS, UNIT WEIGHTS, OPENING SIZES, AND CURB DIMENSIONS FOR MECHANICAL EQUIPMENT WITH THE ACTUAL EQUIPMENT FURNISHED.

14. SHOP PRIME STEEL SURFACES, EXCEPT THE FOLLOWING:

   A. SURFACES EMBEDDED IN CONCRETE OR MORTAR. EXTEND PRIMING OF PARTIALLY EMBEDDED MEMBERS TO A DEPTH OF 2 INCHES.
   B. SURFACES TO BE WELDED.
   C. SURFACES TO RECEIVE SPRAYED FIRE-RESISTIVE MATERIALS.
   D. GALVANIZED SURFACES.
   E. SURFACES ENCLOSED IN INTERIOR CONSTRUCTION.

15. CLEAN ALL STEEL SURFACES TO BE PAINTED. REMOVE LOOSE RUST, MILL SCALE, SPATTER, SLAG, OR FLUX DEPOSITS. PREPARE SURFACES IN ACCORDANCE WITH SSPC-SP3 SPECIFICATION AND STANDARD.

16. HOT-DIP GALVANIZE AFTER FABRICATION THE FOLLOWING:

   A. ANGLES AND PLATES SUPPORTING MASONRY IN EXTERIOR WALLS.
   B. LINTELS AND LINTEL ASSEMBLIES SUPPORTING MASONRY IN EXTERIOR WALLS.
   C. ALL STEEL EXPOSED TO WEATHER IN THE FINAL CONSTRUCTION.
   D. ITEMS IDENTIFIED AS GALVANIZED ON ARCHITECTURAL OR STRUCTURAL DRAWINGS.
   E. STEEL IN CONTACT WITH PT WOOD.

17. STEEL MEMBERS MUST BE SPLICED ONLY WHERE INDICATED.

18. LOCATE CONSTRUCTION JOINTS FOR SLABS ON METAL DECK MIDWAY BETWEEN BEAMS WHERE THE JOINT IS PARALLEL TO THE BEAM SPAN. LOCATE JOINTS WITHIN THE MIDDLE THIRD SPAN WHERE THE JOINT IS PERPENDICULAR TO THE BEAM SPAN. ANY STOP IN CONCRETE WORK MUST BE MADE WITH VERTICAL BULKHEADS, UNLESS OTHERWISE SHOWN. REINFORCING TO BE CONTINUOUS THROUGH JOINTS.

19. ALL STAIR LANDINGS, STAIRS, AND STAIR SUPPORTS TO BE DESIGNED BY STAIR MANUFACTURER. LAYOUT OF STAIRS, LANDINGS, HANDRAILS, ETC. SHALL COMPLY WITH ARCHITECTURAL DRAWINGS. STRUCTURAL DESIGN CALCULATIONS AND DRAWINGS STAMPED BY A REGISTERED ENGINEER SHALL BE SUBMITTED TO THE STRUCTURAL EOR FOR REVIEW OF LOADING. ARCHITECT AND STAIR MANUFACTURER ARE RESPONSIBLE TO REVIEW FOR CODE AND ADA COMPLIANCE. STAIR MANUFACTURER SHALL PROVIDE ALL POSTS AND CONNECTIONS TO SUPPORT STAIRS. POSTS AND HANGERS MUST BE LOCATED IN PARTITION WALLS AND LOAD THE STRUCTURE CONCENTRICALLY.

WOOD DECK NOTES:

1. ROOF DECKING SHALL BE AS NOTED ON PLANS, TONGUE AND GROOVE CONTINUOUS LAY UP (NO LAPS).

2. ALL EXTERIOR EXPOSED STRUCTURAL WOOD DECKING AND BLOCKING, AND SHEATHING IS TO BE EXTERIOR GRADE PRESSURE PRESERVATIVE TREATED, MIN. RETENTION 0.25 PCF.

3. WOOD DECKING TO BE STRESS RATED DOUG FIR OR SPRUCE-PINE-FIR #1 OR BETTER.

4. SCREW LENGTH TO FIT APPLICATION. ALL SCREWS SHALL PENETRATE A MINIMUM OF 1 3/4" BUT NOT MORE THAN THE FULL THICKNESS OF THE MEMBER. INSTALL PER MANUFACTURER'S INSTRUCTIONS. NOTE: SIMPSON STRONG DRIVE SCREWS ARE DEFINED AS SELF-TAPPING. OTHER SCREWS TYPES MAY REQUIRE PRE-DRILLING. MINIMUM SCREW/BOLT SIZE #12, U.O.N.

5. STRUCTURAL MEMBERS WHOSE STRENGTH IS IMPAIRED BY IMPROPER CUTTING, DRILLING, OR EXCESSIVE DEFECTS SHALL BE REPLACED OR REINFORCED IN A MANNER ACCEPTABLE TO THE ARCHITECT.

6. FASTEN WOOD DECKING TO SUPPORTS WITH NOT LESS THAN #14 SCREWS AT 4" O.C.

7. WOOD STRUCTURAL PANELS (WSP) MUST COMPLY WITH PS 1 "U.S. PRODUCT STANDARD FOR CONSTRUCTION AND INDUSTRIAL PLYWOOD" FOR PLYWOOD CONSTRUCTION PANELS AND THE FOLLOWING REQUIREMENTS:
   A. EXTERIOR WALL SHEATHING, SIZE INDICATED ON THE DRAWINGS APA RATED SHEATHING, EXPOSURE 1 DURABILITY CLASSIFICATION.

8. FIELD TREAT ALL CUTS AND ABRASIONS IN TREATED TIMBERS IN ACCORDANCE WITH THE AMERICAN WOOD PRESERVERS ASSOCIATION STANDARD M4. TRIM ALL CUTS AND ABRASIONS BEFORE FIELD TREATMENT. COAT ALL DEPRESSIONS OR OPENINGS AROUND BOLT HOLES, JOINTS OR GAPS INCLUDING RECESSES FORMED BY COUNTER BORING, WITH PRESERVATIVE TREATMENT USED FOR TIMBER

9. UNLESS OTHERWISE NOTED, ATTACHED BLOCKING AND NAILERS TO THE STEEL FRAMING USING 3/16 INCH DIAMETER POWDER ACTUATED FASTENERS AT 24 INCHES ON CENTER, STAGGER FASTENERS AT ALTERNATE SIDES OF BEAM WEB.

10. WHERE MULTIPLE FRAMING MEMBERS ARE INDICATED: SCAB CONTINGENT MEMBERS TOGETHER WITH 16d NAILS AT 12 INCHES ON CENTER, ALTERNATING AT 2 INCHES FROM EACH EDGE.

Susan Hatchell
Landscape Architecture, PLLC
711 W. North Street, Raleigh, NC 27603
p: 919-838-9600 f: 919-838-9700

lynchmykins now IMEG
301 N WEST STREET, SUITE 105
RALEIGH, NC 27603
919.782.1833 www.imegcorp.com

GENERAL NOTES

LAKE MYRA COUNTY PARK
Wake County, NC

NORTH CAROLINA PROFESSIONAL SEAL 044996 ENGINEER SCOTT M. FRANCIS
07/27/2026

REVISIONS

lynchmykins now IMEG
301 N WEST STREET, SUITE 105
RALEIGH, NC 27603
919.782.1833 www.imegcorp.com

IMEG RESERVES PROPRIETARY RIGHTS, INCLUDING COPYRIGHTS, TO THIS DRAWING AND THE DATA SHOWN THEREON. SAID DRAWING AND/OR DATA ARE THE EXCLUSIVE PROPERTY OF IMEG AND SHALL NOT BE USED OR REPRODUCED FOR ANY OTHER PROJECT WITHOUT THE EXPRESS WRITTEN APPROVAL AND PARTICIPATION OF IMEG. ©2025 IMEG CONSULTANTS CORP.

North Carolina Design Registration #F-1507

Date07/27/2026

ES-S002

ROUGH CARPENTRY NOTES:

1. ROUGH CARPENTRY MUST BE IN ACCORDANCE WITH THE AMERICAN WOOD COUNCIL (AWC) "NATIONAL DESIGN SPECIFICATION FOR WOOD CONSTRUCTION."

2. UNLESS OTHERWISE NOTED, USE 'COMMON' NAILS AND ALL NAILING MUST CONFORM TO THE "FASTENING SCHEDULE" TABLE 2304.10.1 OF THE BUILDING CODE.

3. WOOD FRAMING MEMBERS MUST COMPLY WITH PS 20 "AMERICAN SOFTWOOD LUMBER STANDARD" AND THE FOLLOWING REQUIREMENTS:
   A. MOISTURE CONTENT - SEASONED, WITH 19 PERCENT MAXIMUM MOISTURE CONTENT.
   B. GRADE - NO. 2, OR BETTER UNLESS OTHERWISE NOTED.
   C. SPECIES - [SPRUCE-PINE-FIR UNDER NLGA RULES] [SPRUCE-PINE-FIR (SOUTH) UNDER WWPA RULES] [SOUTHERN PINE GRADED UNDER SPIB RULES].

4. WOOD STRUCTURAL PANELS (WSP) MUST COMPLY WITH PS 1 "U.S. PRODUCT STANDARD FOR CONSTRUCTION AND INDUSTRIAL PLYWOOD" FOR PLYWOOD CONSTRUCTION PANELS AND THE FOLLOWING REQUIREMENTS:
   A. ROOF SHEATHING: 9/16" INCH, APA RATED SHEATHING, EXTERIOR EXPOSURE DURABILITY CLASSIFICATION. PROVIDE TONGUE-AND-GROOVE EDGES OR USE "PLY-CLIPS" AT MID-SPAN BETWEEN EACH SUPPORT.

5. ALL WOOD FRAMING MEMBERS PERMANENTLY EXPOSED TO THE WEATHER AND ALL SILL PLATES IN CONTACT WITH CONCRETE MUST BE PRESERVATIVE-TREATED. REFER TO THE SPECIFICATIONS.

6. STEEL PLATE CONNECTORS MUST COMPLY WITH ASTM A 36 SPECIFICATIONS (Fy= 36 KSI). BOLTS CONNECTING WOOD MEMBERS MUST COMPLY WITH ASTM A307 COMMON STEEL BOLTS, AND MUST BE 1/2 INCH DIAMETER, UNLESS OTHERWISE NOTED.

7. METAL FRAMING ANCHORS, HOLD DOWNS, HURRICANE TIES, HANGERS, ETC. MUST COMPLY WITH ASTM A653 AND BE CAPABLE OF SUPPORTING THE REACTIONS SHOWN. WHERE PRODUCTS OF A SPECIFIC MANUFACTURER ARE SHOWN, EQUAL PRODUCTS OF ANOTHER MANUFACTURER MAY BE USED IF APPROVED.

8. PROVIDE HEADERS OF THE SAME CROSS SECTION AS JOISTS OR RAFTERS TO FRAME AROUND ALL OPENINGS TO SUPPORT SHEATHING, UNLESS OTHERWISE NOTED OR DETAILED ON THE DRAWINGS.

9. UNLESS OTHERWISE NOTED, ATTACH BLOCKING AND NAILERS TO STEEL FRAMING USING 3/16 INCH DIAMETER POWDER ACTUATED FASTENERS AT 24 INCHES ON CENTER OR 1/2 INCH DIAMETER BOLTS AT 48 INCHES ON CENTER. STAGGER FASTENERS TO ALTERNATE SIDES OF BEAM WEB.

10. WHERE MULTIPLE FRAMING MEMBERS ARE INDICATED, SCAB CONTINGENT MEMBERS TOGETHER WITH 16d NAILS AT 12 INCHES ON CENTER, ALTERNATING AT 2 INCHES FROM EACH EDGE.

11. ALL CONNECTION HARDWARE IN CONTACT WITH PRESERVATIVE TREATED WOOD MUST BE HOT-DIP GALVANIZED COATED.

12. POWDER ACTUATED FASTENERS (PAF) MUST HAVE A MINIMUM ALLOWABLE CAPACITY INTO THE BASE MATERIAL AS FOLLOWS UNLESS OTHERWISE NOTED:
    A. STEEL: SHEAR = 600 LBS
       TENSION = 250 LBS
    B. CONCRETE: SHEAR = 260 LBS
       TENSION = 255 LBS

STRUCTURAL DELEGATED DESIGN ELEMENT NOTES:

1. THE FOLLOWING BUILDING ELEMENTS REQUIRE DELEGATED DESIGN AND ENGINEERING BY A SPECIALTY STRUCTURAL ENGINEER:
   A. GLAZING ASSEMBLY CONNECTIONS TO THE STRUCTURE
   B. STRUCTURAL STEEL CONNECTIONS
   C. MECHANICAL, ELECTRICAL, AND PLUMBING SUPPORTS AND DISTRIBUTIONS SYSTEMS, INCLUDING BRACING AND ATTACHMENTS

   REFERENCE SPECIFICATIONS FOR COMPLETE REQUIREMENTS

2. SUBMIT COMPLETE CALCULATIONS AND SHOP DRAWINGS, SIGNED AND SEALED BY THE PROFESSIONAL ENGINEER REGISTERED IN THE STATE OF NORTH CAROLINA RESPONSIBLE FOR THE DESIGN, INCLUDING DESIGN LOADINGS AND REACTIONS APPLIED TO THE SUPPORTING STRUCTURE. INCLUDE A SUMMARY OF THE CONTROLLING LOAD CASES FOR EACH LOCATION.

3. IN ADDITION TO THEIR OWN DEAD WEIGHT AND THE DEAD LOADS SHOWN OR INDICATED IN THE DRAWINGS, MEMBERS MUST BE DESIGNED TO SUPPORT THE LOADS INDICATED IN THE GENERAL NOTES.

4. CONNECTION DETAILS SHOWN ARE SCHEMATIC ONLY. ALL CONNECTIONS MUST BE DESIGNED AND DETAILED BY THE MANUFACTURER TO SUIT THE SPECIFIED LOADS. CONNECTIONS MUST ACCOUNT FOR THERMAL MOVEMENT, DEFLECTION, CREEP, MANUFACTURING TOLERANCES, AND ERECTION TOLERANCES. DETAIL ALL CONNECTIONS ON SHOP DRAWINGS.

5. THE CONTRACTOR MUST BE RESPONSIBLE FOR THE COORDINATION OF ALL SPECIALTY STRUCTURAL ELEMENTS AND COST ASSOCIATED WITH A CONTRACTOR INITIATED CHANGE IN BUILDING STRUCTURE, INCLUDING CONSTRUCTION COSTS AND RE-ENGINEERING COSTS.

WOOD DECK NOTES:

1. ROOF DECKING SHALL BE AS NOTED ON PLANS, TONGUE AND GROOVE CONTINUOUS LAY UP (NO LAPS).

2. ALL EXTERIOR EXPOSED STRUCTURAL WOOD DECKING AND BLOCKING, AND SHEATHING IS TO BE EXTERIOR GRADE PRESSURE PRESERVATIVE TREATED, MIN. RETENTION 0.25 PCF.

3. WOOD DECKING TO BE STRESS RATED DOUG FIR OR SPRUCE-PINE-FIR #1 OR BETTER.

4. SCREW LENGTH TO FIT APPLICATION. ALL SCREWS SHALL PENETRATE A MINIMUM OF 1 3/4" BUT NOT MORE THAN THE FULL THICKNESS OF THE MEMBER. INSTALL PER MANUFACTURER'S INSTRUCTIONS. NOTE: SIMPSON STRONG DRIVE SCREWS ARE DEFINED AS SELF-TAPPING. OTHER SCREWS TYPES MAY REQUIRE PRE-DRILLING. MINIMUM SCREW/BOLT SIZE #12, U.O.N.

5. STRUCTURAL MEMBERS WHOSE STRENGTH IS IMPAIRED BY IMPROPER CUTTING, DRILLING, OR EXCESSIVE DEFECTS SHALL BE REPLACED OR REINFORCED IN A MANNER ACCEPTABLE TO THE ARCHITECT.

6. FASTEN WOOD DECKING TO SUPPORTS WITH NOT LESS THAN #14 SCREWS AT 4" O.C.

7. WOOD STRUCTURAL PANELS (WSP) MUST COMPLY WITH PS 1 "U.S. PRODUCT STANDARD FOR CONSTRUCTION AND INDUSTRIAL PLYWOOD" FOR PLYWOOD CONSTRUCTION PANELS AND THE FOLLOWING REQUIREMENTS:
   A. EXTERIOR WALL SHEATHING, SIZE INDICATED ON THE DRAWINGS APA RATED SHEATHING, EXPOSURE 1 DURABILITY CLASSIFICATION.

8. FIELD TREAT ALL CUTS AND ABRASIONS IN TREATED TIMBERS IN ACCORDANCE WITH THE AMERICAN WOOD PRESERVERS ASSOCIATION STANDARD M4. TRIM ALL CUTS AND ABRASIONS BEFORE FIELD TREATMENT. COAT ALL DEPRESSIONS OR OPENINGS AROUND BOLT HOLES, JOINTS OR GAPS INCLUDING RECESSES FORMED BY COUNTER BORING, WITH PRESERVATIVE TREATMENT USED FOR TIMBER

9. UNLESS OTHERWISE NOTED, ATTACHED BLOCKING AND NAILERS TO THE STEEL FRAMING USING 3/16 INCH DIAMETER POWDER ACTUATED FASTENERS AT 24 INCHES ON CENTER, STAGGER FASTENERS AT ALTERNATE SIDES OF BEAM WEB.

10. WHERE MULTIPLE FRAMING MEMBERS ARE INDICATED: SCAB CONTINGENT MEMBERS TOGETHER WITH 16d NAILS AT 12 INCHES ON CENTER, ALTERNATING AT 2 INCHES FROM EACH EDGE.

POST-INSTALLED ANCHOR NOTES:

1. ANCHORS TO BE POST-INSTALLED ONLY WHERE INDICATED ON CONSTRUCTION DOCUMENTS. ANY SUBSTITUTE OF CAST-IN ANCHOR TO POST-INSTALLED ANCHORS MUST BE SUBMITTED AS A REQUEST FOR DEVIATION TO THE ENGINEER OF RECORD PRIOR TO CONSTRUCTION.

2. ALL POST INSTALLED ANCHORS INDICATED ON THE DRAWINGS ARE BY HILTI, INC, AND MUST BE CONSIDERED THE BASIS OF DESIGN PRODUCT. WHERE NOT EXPLICITLY INDICATED IN THE DRAWINGS, THE FOLLOWING ANCHORS/ADHESIVES MUST BE USED:
   A. ANCHORAGE TO CONCRETE
      1. ADHESIVE ANCHORS FOR CRACKED AND UNCRACKED CONCRETE USE:
         a. HILTI HIT-HY 200 SAFE SET SYSTEM WITH HILTI HOLLOW DRILL BIT (TE-CD OR TE-YD) AND VC 20/40 VACUUM SYSTEM (VC 20-U OR VC40U) WITH STEEL THREADED ROD PER ICC ESR-3187.
      2. SCREW ANCHORS FOR CRACKED AND UNCRACKED CONCRETE USE:
         a. HILTI KWIK HUS EZ SCREW ANCHORS PER ICC ESR-3027.
   B. REBAR DOWELING INTO CONCRETE
      1. ADHESIVE ANCHORS FOR CRACKED AND UNCRACKED CONCRETE USE:
         a. HILTI HIT-HY 200 SAFE SET SYSTEM WITH HILTI HOLLOW DRILL BIT (TE-CD OR TE-YD) AND VC 20/40 VACUUM SYSTEM (VC 20-U OR VC 40-U) WITH CONTINUOUSLY DEFORMED REBAR PER ICC ESR-3187.
   C. ANCHORAGE TO SOLID GROUTED MASONRY
      1. ADHESIVE ANCHORS USE:
         a. HILTI HIT-HY 270 MASONRY ADHESIVE ANCHORING SYSTEM (ICC PENDING).
         b. STEEL ANCHOR ELEMENT MUST BE HILTI HAS-E CONTINUOUSLY THREADED ROD.
      2. MECHANICAL ANCHORS USE:
         a. HILTI KWIK HUS EZ SCREW ANCHORS PER ICC ESR 3056.
   D. ANCHORAGE TO HOLLOW / MULTI-WYTHE MASONRY
      1. ADHESIVE ANCHORS USE:
         a. HILTI HIT-HY 270 MASONRY ADHESIVE ANCHORING SYSTEM PER ICC ESR-3342.
         b. STEEL ANCHOR ELEMENT MUST BE HILTI HAS-E CONTINUOUSLY THREADED ROD OR CONTINUOUSLY DEFORMED STEEL REBAR.
         c. THE APPROPRIATE SIZE SCREEN TUBE MUST BE USED PER ADHESIVE MANUFACTURER'S RECOMMENDATION.

3. ALTERNATE POST INSTALLED ANCHOR PRODUCTS MAY BE SUBMITTED TO THE ENGINEER FOR REVIEW AND POSSIBLE APPROVAL. ALL SUBSTITUTION REQUESTS MUST BE ACCOMPANIED BY AN ICC ESR SHOWING COMPLIANCE WITH THE RELEVANT BUILDING CODE FOR SEISMIC USES, LOAD RESISTANCE, INSTALLATION CATEGORY, AND COMPREHENSIVE INSTALLATION INSTRUCTIONS. ADHESIVE ANCHOR EVALUATION WILL ALSO CONSIDER CREEP, IN-SERVICE TEMPERATURE AND INSTALLATION TEMPERATURE. ALTERNATE PRODUCTS MAY REQUIRE MODIFICATIONS TO ANCHOR DIAMETER, SPACING, AND EMBEDMENT.

4. INSTALL ANCHORS PER THE MANUFACTURER INSTRUCTIONS, AS INCLUDED IN THE ANCHOR PACKAGING.

5. THE CONTRACTOR MUST ARRANGE FOR AN ANCHOR MANUFACTURER'S REPRESENTATIVE TO PROVIDE ONSITE INSTALLATION TRAINING FOR ALL OF THEIR ANCHORING PRODUCTS SPECIFIED. THE STRUCTURAL ENGINEER OF RECORD MUST RECEIVE DOCUMENTED CONFIRMATION THAT ALL OF THE CONTRACTOR'S PERSONNEL WHO INSTALL ANCHORS ARE TRAINED PRIOR TO THE COMMENCEMENT OF ANCHOR INSTALLATION.

6. ANCHOR CAPACITY IS DEPENDANT UPON SPACING BETWEEN ADJACENT ANCHORS AND PROXIMITY OF ANCHORS TO EDGE OF CONCRETE. INSTALL ANCHORS IN ACCORDANCE WITH SPACING AND EDGE CLEARANCES INDICATED ON THE DRAWINGS.

7. EXISTING REINFORCING BARS IN THE CONCRETE STRUCTURE MAY CONFLICT WITH SPECIFIC ANCHOR LOCATIONS. UNLESS NOTED ON THE DRAWINGS THAT THE BARS CAN BE CUT, THE CONTRACTOR MUST LOCATE THE POSITION OF THE REINFORCING BARS AT THE LOCATIONS OF THE CONCRETE ANCHORS, BY FERROSCAN OR GPR.

8. ALL POST INSTALLED ANCHORS REQUIRE CONTINUOUS INSPECTIONS BY THE OWNER'S MATERIALS TESTING AGENCY TO VERIFY INSTALLATION HAS BEEN PERFORMED IN ACCORDANCE WITH THE MANUFACTURER'S WRITTEN INSTRUCTIONS.

Susan Hatchell
Landscape Architecture, PLLC
711 W. North Street, Raleigh, NC 27603
p: 919-838-9600 f: 919-838-9700

lynchmykins now IMEG
301 N WEST STREET, SUITE 105
RALEIGH, NC 27603
919.782.1833 www.imegcorp.com

GENERAL NOTES

LAKE MYRA COUNTY PARK
Wake County, NC

NORTH CAROLINA PROFESSIONAL SEAL 044996 ENGINEER SCOTT M. FRANCIS
07/27/2026

REVISIONS

lynchmykins now IMEG
301 N WEST STREET, SUITE 105
RALEIGH, NC 27603
919.782.1833 www.imegcorp.com

IMEG RESERVES PROPRIETARY RIGHTS, INCLUDING COPYRIGHTS. TO THIS DRAWING AND THE DATA SHOWN THEREON. SAID DRAWING AND/OR DATA ARE THE EXCLUSIVE PROPERTY OF IMEG AND SHALL NOT BE USED OR REPRODUCED FOR ANY OTHER PROJECT WITHOUT THE EXPRESS WRITTEN APPROVAL AND PARTICIPATION OF IMEG. ©2025 IMEG CONSULTANTS CORP.

North Carolina Design Registration #F-1507

Date07/27/2026

ES-S003

ABBREVIATIONS

AFF	ABOVE FINISHED FLOOR
ARCH	ARCHITECT
BD	BAR DIAMETER
BF	BRACED FRAME
BEJ	BUILDING EXPANSION JOINT
BLDG	BUILDING
BM	BEAM
BOD	BOTTOM OF DECK
BOS	BOTTOM OF STEEL
BOT, B	BOTTOM
BRG	BEARING
BTWN	BETWEEN
C TO C	CENTER TO CENTER
CFMF	COLD-FORMED METAL FRAMING
CJ	CONTROL JOINT
CL	CENTERLINE
CLR	CLEAR
CMU	CONCRETE MASONRY UNIT
COL	COLUMN
CONC	CONCRETE
CONN	CONNECTION
CONSTR	CONSTRUCTION
CONT	CONTINUOUS
COORD	COORDINATE
CTR	CENTER
CTRD	CENTERED
DBA	DEFORMED BAR ANCHOR
DBL	DOUBLE
DC	DIAPHRAGM CHORD
DCJ	DOWELED CONSTRUCTION JOINT
DIA, Ø	DIAMETER
DIST	DISTANCE
DJ	DOUBLE JOIST
DWGS	DRAWINGS
EA	EACH
EF	EACH FACE
EJ	EXPANSION JOINT
EL	ELEVATION
ELEV	ELEVATOR
EMBED	EMBEDMENT
EOD	EDGE OF DECK
EOS	EDGE OF SLAB
EQ	EQUAL
EW	EACH WAY
EXIST	EXISTING
EXP	EXPANSION
EXT	EXTERIOR
FD	FLOOR DRAIN
FDN	FOUNDATION
FO	FACE OF
FF EL	FINISHED FLOOR ELEVATION
FIN	FINISH
FIN FLR	FINISHED FLOOR
FOB	FACE OF BUILDING
FOC	FACE OF CONCRETE
FOM	FACE OF MASONRY
FOS	FACE OF SLAB/ STUD
FRMG	FRAMING
FTG	FOOTING
FS	FAR SIDE
FV, ±	FIELD VERIFY
GALV	GALVANIZED
GC	GENERAL CONTRACTOR
GEN	GENERAL
GR BM	GRADE BEAM
H	HIGH
HK	HOOK
HORIZ	HORIZONTAL
HSS	HOLLOW STRUCTURAL SECTION
HSA	HEADED STUD ANCHOR
HT	HEIGHT
HVY	HEAVY
INT	INTERIOR
JBE	JOIST BEARING ELEVATION
JT	JOINT
KCJ	KEYED CONSTRUCTION JOINT
KCJ	KEYED CONSTRUCTION JOINT
Ld	REBAR TENSION DEVELOPMENT LENGTH
Ldc	REBAR COMPRESSION DEVELOPMENT LENGTH
Ldh	HOOKED REBAR TENSION DEVELOPMENT LENGTH
Ls	REBAR TENSION SPLICE LENGTH
Lsc	REBAR COMPRESSION SPLICE LENGTH
L	LOW
LLH	LONG LEG HORIZONTAL
LLV	LONG LEG VERTICAL
LSH	LONG SIDE HORIZONTAL
LSV	LONG SIDE VERTICAL
LTWT	LIGHTWEIGHT
LWC	LIGHTWEIGHT CONCRETE
MAS	MASONRY
MATL	MATERIAL
MAX	MAXIMUM
MECH	MECHANICAL
MF	MOMENT FRAME
MFR	MANUFACTURER
MID	MIDDLE
MIN	MINIMUM
MOD	MODIFY
MOS	MIDDEPTH OF SLAB
NOM	NOMINAL
NS	NEAR SIDE
NTS	NOT TO SCALE
OC	ON CENTER
OPH	OPPOSITE HAND
OPNG	OPENING
PAF	POWDER ACTUATED FASTENER
PAR	PARALLEL
PC	PIECE
PEMB	PRE-ENGINEERED METAL BUILDING
PEN	PENETRATE, PENETRATION
PERP	PERPENDICULAR
PL	PLATE
PT	POST-TENSIONED (CONC) PRESSURE TREATED (WOOD)
R	RADIUS
REF	REFERENCE, REFER TO
REINF	REINFORCE, REINFORCED, REINFORCING
REQD	REQUIRED
REQMTS	REQUIREMENTS
SCHED	SCHEDULE
SF	STEPPED FOOTING
SGB	STEPPED GRADE BEAM
SIM	SIMILAR
SJ	SAWED JOINT
SL	SLOPE
SOG	SLAB-ON-GRADE
SPF	SIDEPLATE FRAME
STD	STANDARD
STIFF	STIFFENER
TBE	TRUSS BEARING ELEVATION
T&B	TOP & BOTTOM
T&G	TONGUE AND GROOVE
THK	THICKNESS
TOC	TOP OF CONCRETE
TOF	TOP OF FOOTING
TOM	TOP OF MASONRY
TOCP	TOP OF CONCRETE PEDESTAL
TOS	TOP OF STEEL
TS	THICKENED SLAB
TS/STR	THICKENED SLAB AT STAIR
TYP	TYPICAL
UON	UNLESS OTHERWISE NOTED
VERT	VERTICAL
W/	WITH
WP	WORKING POINT
WSP	WOOD STRUCTURAL PANEL(S)
WWR	WELDED WIRE REINFORCING

Susan Hatchell
Landscape Architecture, PLLC
711 W. North Street, Raleigh, NC 27603
p: 919-838-9600 f: 919-838-9700

lynchmykins now IMEG
301 N WEST STREET, SUITE 105
RALEIGH, NC 27603
919.782.1833 www.imegcorp.com

GENERAL NOTES

LAKE MYRA COUNTY PARK
Wake County, NC

NORTH CAROLINA PROFESSIONAL SEAL 044996 ENGINEER SCOTT M. FRANCIS
07/27/2026

REVISIONS

lynchmykins now IMEG
301 N WEST STREET, SUITE 105
RALEIGH, NC 27603
919.782.1833 www.imegcorp.com

IMEG RESERVES PROPRIETARY RIGHTS, INCLUDING COPYRIGHTS, TO THIS DRAWING AND THE DATA SHOWN THEREON. SAID DRAWING AND/OR DATA ARE THE EXCLUSIVE PROPERTY OF IMEG AND SHALL NOT BE USED OR REPRODUCED FOR ANY OTHER PROJECT WITHOUT THE EXPRESS WRITTEN APPROVAL AND PARTICIPATION OF IMEG. ©2025 IMEG CONSULTANTS CORP.

North Carolina Design Registration #F-1507

Date07/27/2026

ES-S004

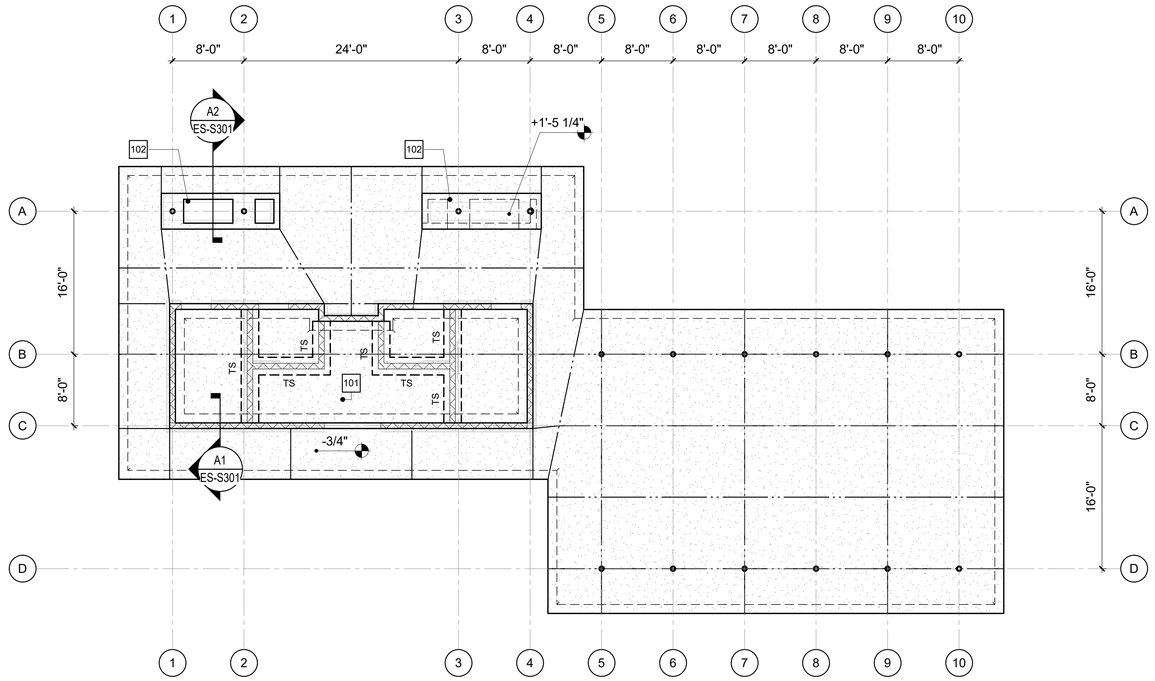

C1 SHELTER A - SLAB PLAN
1/8" = 1'-0"

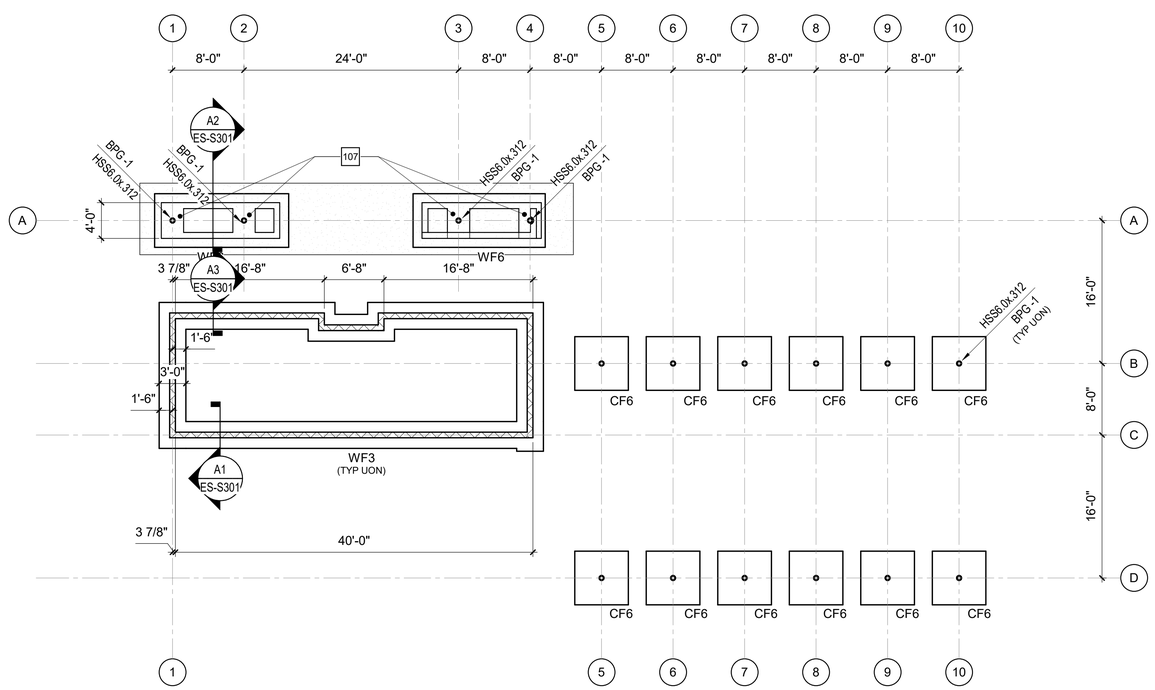

A1 SHELTER A - FOUNDATION PLAN
1/8" = 1'-0"

FOUNDATION PLAN NOTES

A. REFERENCE ARCHITECTURAL DRAWINGS FOR DIMENSIONS TO NONBEARING WALLS, WALL CONTROL JOINTS AND OPENINGS.

B. UNLESS OTHERWISE NOTED, ALL ELEVATIONS ARE BASED ON A FINISHED FIRST FLOOR REFERENCE OF 0'-0". ACTUAL FINISHED FLOOR ELEVATION IS XX.XX'. FINISHED FLOOR ELEVATIONS AT EACH LEVEL ARE INDICATED ON SLAB PLANS. REFERENCE ARCHITECTURAL DRAWINGS FOR FINISHED FLOOR MATERIALS.

C. TOP OF ALL COLUMN AND WALL FOOTINGS MUST BE AT THE FOLLOWING ELEVATIONS UNLESS OTHERWISE NOTED ON PLAN. EXTERIOR WALL AND COLUMN FOOTINGS -1'-4". INTERIOR WALL FOOTINGS -0'-8".

D. NOT ALL UTILITY LOCATIONS ARE SHOWN ON PLAN. THE CONTRACTOR MUST COORDINATE THE LOCATIONS, SIZES, AND INVERTS OF UTILITIES. AT LOCATIONS WHERE UTILITIES PASS BELOW THE TOP OF FOOTING ELEVATION, STEP THE TOP OF FOOTING DOWN ON EACH SIDE PER THE "TYPICAL STEPPED FOOTING DETAIL" AND SLEEVE THE UTILITY THROUGH THE FOUNDATION WALL. THE CONTRACTOR MAY, AT HIS/HER OPTION, SLEEVE THE UTILITY THROUGH THE FOUNDATION PER THE "TYPICAL PIPE SLEEVE AT WALL FOOTING DETAILS."

E. UNLESS OTHERWISE INDICATED, EXTEND WALL FOOTINGS A MINIMUM OF 6 INCHES BEYOND ENDS OF WALLS.

F. NOT ALL SITE WALLS ARE SHOWN ON PLAN. CONTRACTOR MUST COORDINATE CIVIL AND LANDSCAPE DRAWINGS FOR SITE WALL INFORMATION.

G. DIMENSIONS SHOWN ON FOUNDATION PLAN ARE TO COLUMN GRIDLINES AND FACE OF FOUNDATION WALLS, UNLESS OTHERWISE NOTED.

SLAB PLAN NOTES

A. REFERENCE ARCHITECTURAL DRAWINGS FOR EXACT LIMITS OF SLAB DEPRESSIONS AND OMITTED SLABS.

B. FLOOR SINKS AND DRAINS ARE NOT SHOWN ON PLAN. REFERENCE PME DRAWINGS FOR LOCATIONS.

C. REFERENCE CIVIL AND LANDSCAPE DRAWINGS FOR EXTERIOR CONCRETE SLABS AND PAVING.

D. SLAB-ON-GRADE JOINTS MUST BE SAWED JOINTS OR KEYED CONSTRUCTION JOINTS, UNLESS OTHERWISE NOTED. CONTRACTOR MUST COORDINATE ALL SLAB JOINTS WITH JOINTS IN BONDED FLOOR FINISHES. REFERENCE ARCHITECTURAL DRAWINGS FOR FLOOR FINISH JOINT LOCATIONS.

E. PLACE (1) #4 x 3'-0" IN MIDDEPTH OF SLAB AT RE-ENTRANT CORNERS WHERE A SLAB JOINT DOES NOT OCCUR.

KEY NOTES

101 5" CONCRETE SLAB-ON-GRADE OVER VAPOR RETARDER AND 4" DEPTH OF POROUS FILL. REINFORCE WITH 6x6 W2.1xW2.1 WELDED WIRE REINFORCING.

102 4" CONCRETE BENCH SLAB REINFORCED WITH 6x6 W2.1xW2.1 WELDED WIRE REINFORCING..

107 30" CONCRETE PLINTH REINFORCED WITH (10) #6 VERTICAL, #3 TIES AT 9" ON CENTER.

COLUMN FOOTING SCHEDULE

MARK	SIZE			REINFORCING		REMARKS
	LENGTH	WIDTH	DEPTH	BOTTOM	TOP	
CF4	4' - 0"	4' - 0"	1'-3"	(4) #5 EW	-	-
CF5	5' - 0"	5' - 0"	1'-3"	(5) #5 EW	-	-
CF6	6' - 0"	6' - 0"	1'-2"	(6) #6 EW	-	-

WALL FOOTING SCHEDULE

MARK	SIZE		REINFORCING		REMARKS
	WIDTH	DEPTH	CONTINUOUS	TRANSVERSE	
WF2.5	2' - 6"	1'-0"	(3) #5 BOT	#_ AT __" OC BOT	-
WF3	3' - 0"	1'-0"	(4) #5 BOT	#_ AT __" OC BOT	-
WF4	4' - 0"	1'-0"	(5) #5 BOT	#_ AT __" OC BOT	-
WF6	6' - 0"	1'-0"	(7) #5 BOT	#_ AT __" OC BOT	-

NORTH CAROLINA PROFESSIONAL SEAL 044996 ENGINEER SCOTT M. FRANCIS
07/27/2026

lynchmykins now IMEG
301 N WEST STREET, SUITE 105
RALEIGH, NC 27603
919.782.1833 www.imegcorp.com

IMEG RESERVES PROPRIETARY RIGHTS, INCLUDING COPYRIGHTS, TO THIS DRAWING AND THE DATA SHOWN THEREON. SAID DRAWING AND/OR DATA ARE THE EXCLUSIVE PROPERTY OF IMEG AND SHALL NOT BE USED OR REPRODUCED FOR ANY OTHER PROJECT WITHOUT THE EXPRESS WRITTEN APPROVAL AND PARTICIPATION OF IMEG. ©2025 IMEG CONSULTANTS CORP.

North Carolina Design Registration #F-1507

Susan Hatchell
Landscape Architecture, PLLC
711 W. North Street, Raleigh, NC 27603
p: 919-838-9600 f: 919-838-9700

lynchmykins now IMEG
301 N WEST STREET, SUITE 105
RALEIGH, NC 27603
919.782.1833 www.imegcorp.com

SHELTER A SLAB AND FOUNDATION PLANS

LAKE MYRA COUNTY PARK
Wake County, NC

REVISIONS

Date07/27/2026

ES-S101

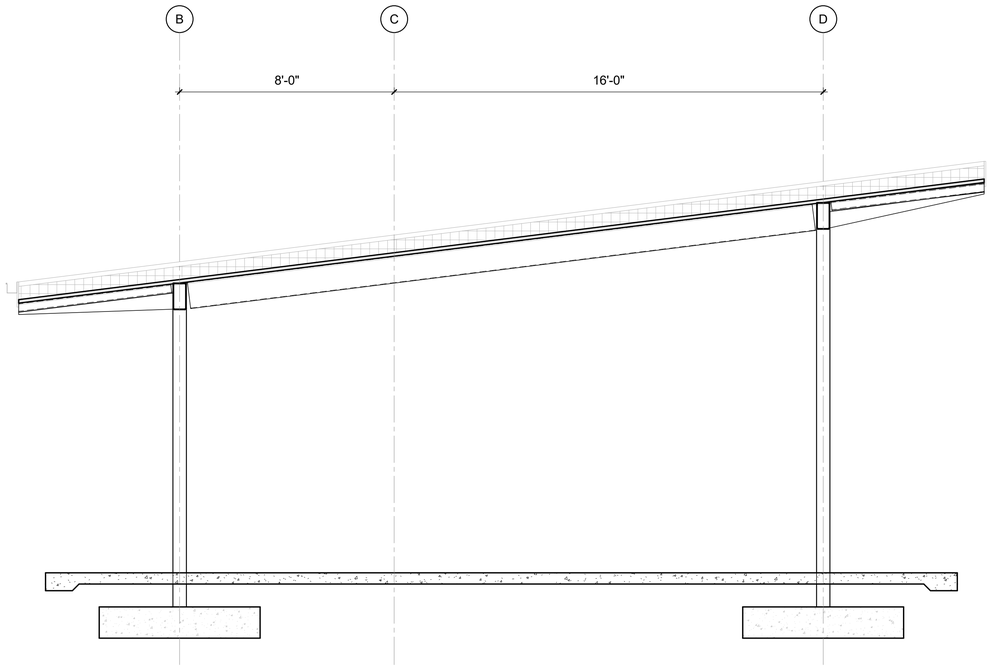

A2 SECTION
3/8" = 1'-0"

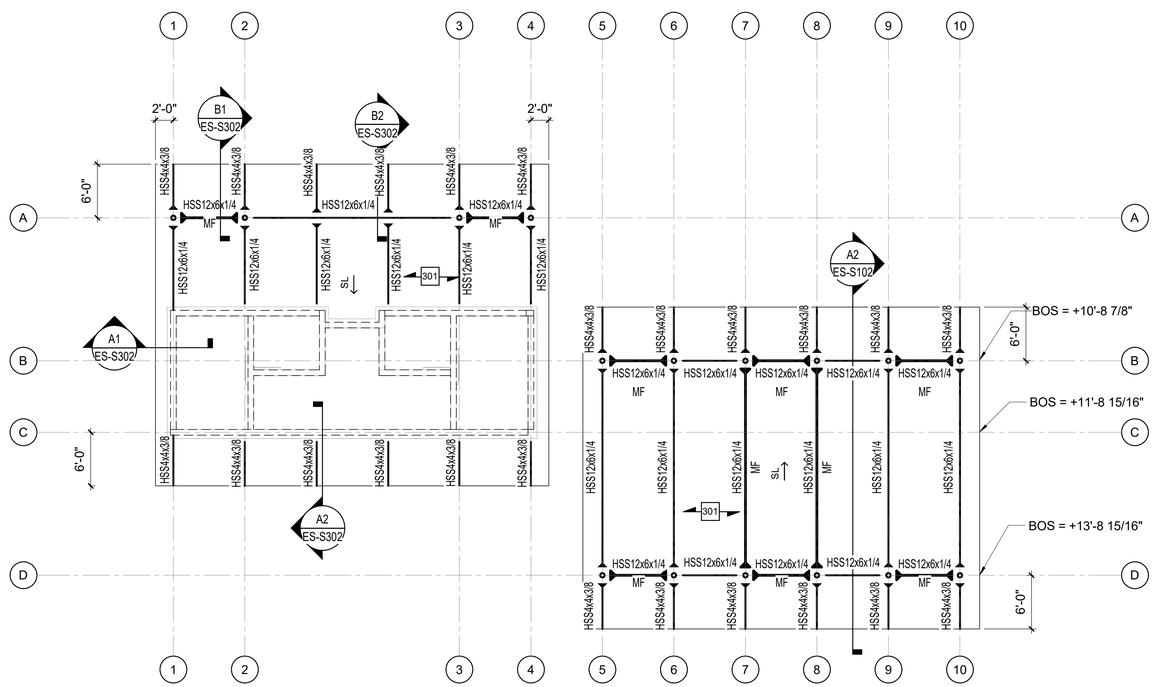

A1 SHELTER BLDG A ROOF PLAN
1/8" = 1'-0"

FRAMING PLAN NOTES

A. REFERENCE FOUNDATION PLAN AND ARCHITECTURAL DRAWINGS FOR DIMENSIONS NOT SHOWN.

B. TOP OF FINISHED FLOOR ELEVATION MUST BE AS NOTED ON SLAB PLANS.

C. COMPOSITE STEEL BEAM FRAMING MUST BE EQUALLY SPACED BETWEEN POINTS OF KNOWN DIMENSIONS (NOT TO EXCEED [10'-0"] ON-CENTER).

D. CONCRETE ON ELEVATED METAL DECKS MUST BE POURED TO THE THICKNESS INDICATED.

E. AT STEEL ROOF FRAMING, BOTTOM OF DECK ELEVATIONS ARE SHOWN ON PLAN. INTERMEDIATE ELEVATIONS MUST BE STRAIGHT LINES BETWEEN GIVEN ELEVATIONS. INTERPOLATE AS REQUIRED FOR INTERMEDIATE BEARING ELEVATIONS, UNLESS OTHERWISE NOTED.

F. COORDINATE AND VERIFY ALL MEMBER LOCATIONS, DIMENSIONS, WEIGHTS, OPENING SIZES, AND CURB DIMENSIONS FOR ALL MECHANICAL EQUIPMENT WITH THE ACTUAL EQUIPMENT FURNISHED. INCLUDE THIS INFORMATION ON THE JOIST AND STRUCTURAL STEEL SHOP DRAWINGS.

KEY NOTES

301 2x6 TONGUE AND GROOVE WOOD DECKING WITH 9/16" PLYWOOD.

Susan Hatchell
Landscape Architecture, PLLC
711 W. North Street, Raleigh, NC 27603
p: 919-838-9600 f: 919-838-9700

lynchmykins now IMEG
301 N WEST STREET, SUITE 105
RALEIGH, NC 27603
919.782.1833 www.imegcorp.com

SHELTER A AND B ROOF FRAMING PLAN

LAKE MYRA COUNTY PARK
Wake County, NC

NORTH CAROLINA PROFESSIONAL SEAL 044996 ENGINEER SCOTT M. FRANCIS
07/27/2026

REVISIONS

lynchmykins now IMEG
301 N WEST STREET, SUITE 105
RALEIGH, NC 27603
919.782.1833 www.imegcorp.com

IMEG RESERVES PROPRIETARY RIGHTS, INCLUDING COPYRIGHTS, TO THIS DRAWING AND THE DATA SHOWN THEREON. SAID DRAWING AND/OR DATA ARE THE EXCLUSIVE PROPERTY OF IMEG AND SHALL NOT BE USED OR REPRODUCED FOR ANY OTHER PROJECT WITHOUT THE EXPRESS WRITTEN APPROVAL AND PARTICIPATION OF IMEG. ©2025 IMEG CONSULTANTS CORP.
North Carolina Design Registration #F-1507

Date07/27/2026

ES-S102

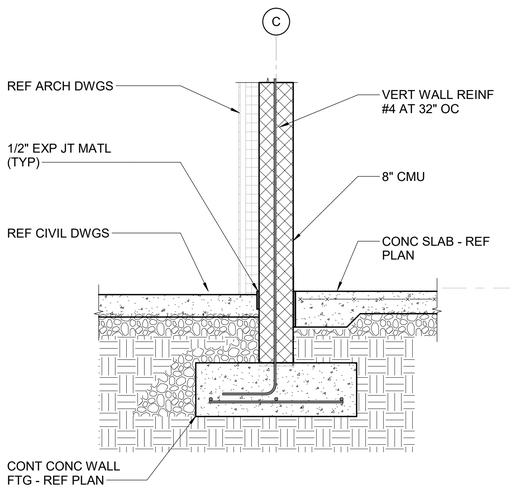

A1 SECTION
3/4" = 1'-0"

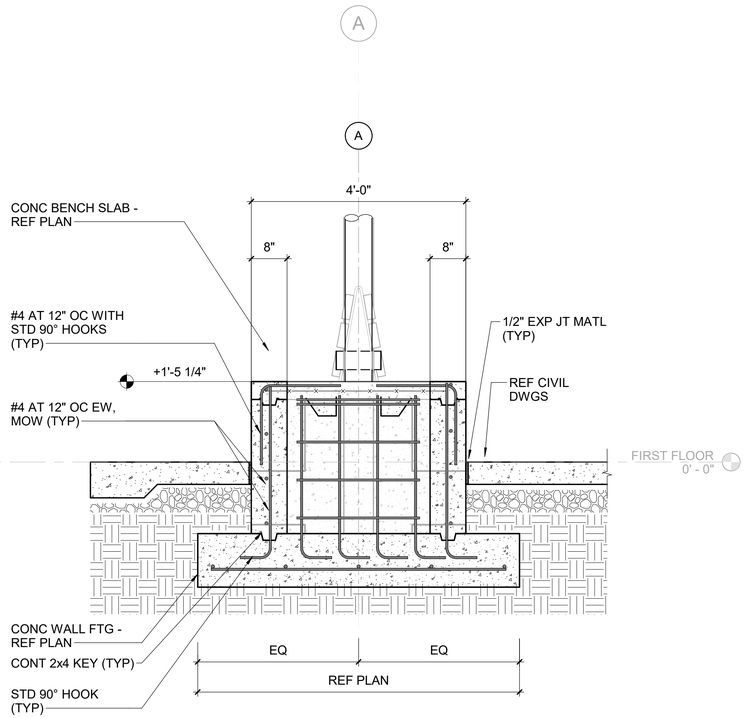

A2 SECTION
3/4" = 1'-0"

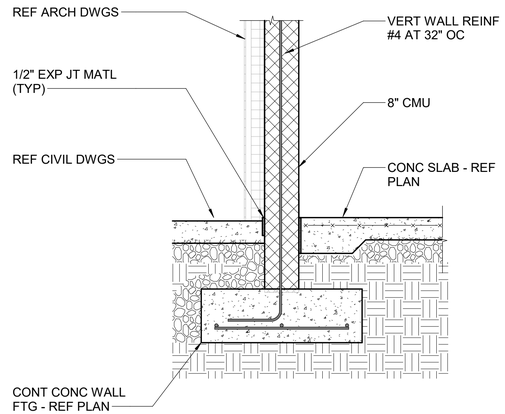

A3 SECTION
3/4" = 1'-0"

NORTH CAROLINA PROFESSIONAL SEAL 044996 ENGINEER SCOTT M. FRANCIS
07/27/2026

lynchmykins
now IMEG
301 N WEST STREET, SUITE 105
RALEIGH, NC 27603
919.782.1833 www.imegcorp.com

IMEG RESERVES PROPRIETARY RIGHTS, INCLUDING COPYRIGHTS, TO THIS DRAWING AND THE DATA SHOWN THEREON. SAID DRAWING AND/OR DATA ARE THE EXCLUSIVE PROPERTY OF IMEG AND SHALL NOT BE USED OR REPRODUCED FOR ANY OTHER PROJECT WITHOUT THE EXPRESS WRITTEN APPROVAL AND PARTICIPATION OF IMEG.
©2025 IMEG CONSULTANTS CORP.
North Carolina Design Registration #F-1507

Susan Hatchell
Landscape Architecture, PLLC
711 W. North Street, Raleigh, NC 27603
p: 919-838-9600 f: 919-838-9700

lynchmykins
now IMEG
301 N WEST STREET, SUITE 105
RALEIGH, NC 27603
919.782.1833 www.imegcorp.com

SECTIONS

LAKE MYRA COUNTY PARK
Wake County, NC

REVISIONS

Date07/27/2026

ES-S301

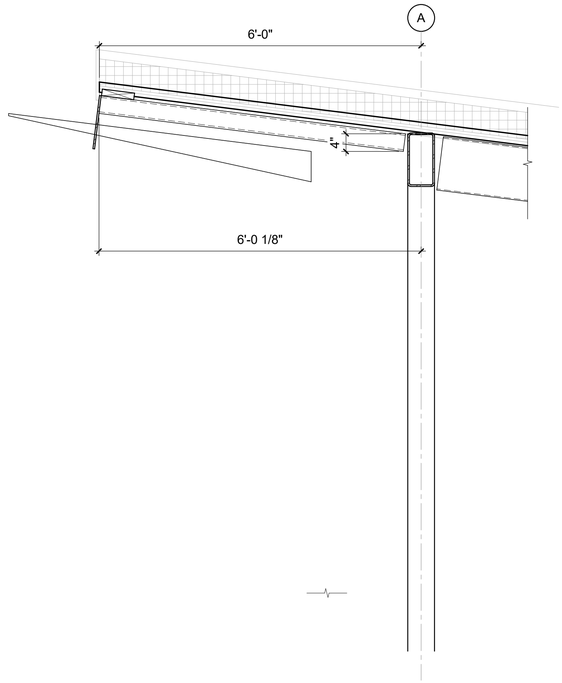

B1 SECTION
3/4" = 1'-0"

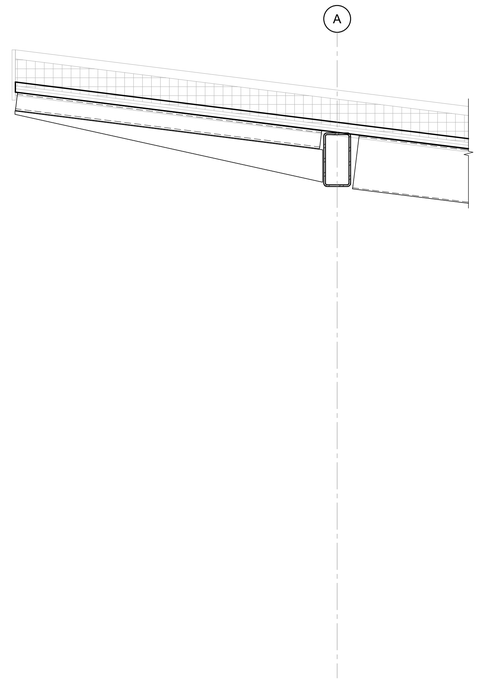

B2 SECTION
3/4" = 1'-0"

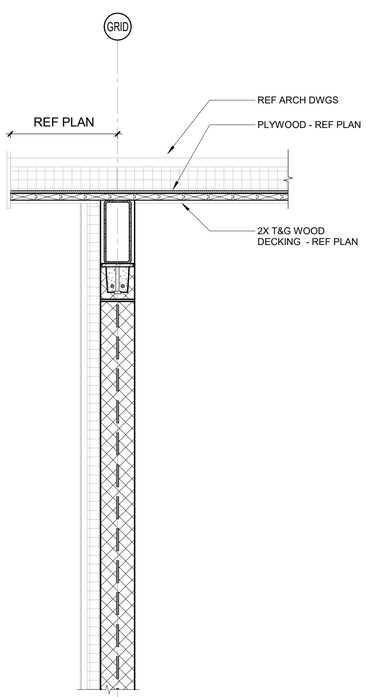

A1 SECTION
3/4" = 1'-0"

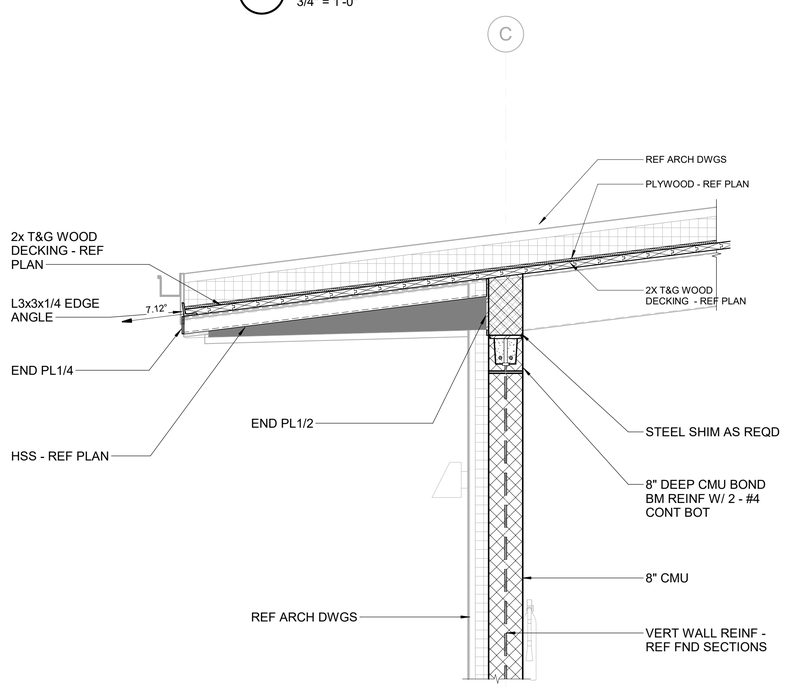

A2 SECTION
3/4" = 1'-0"

Susan Hatchell
Landscape Architecture, PLLC
711 W. North Street, Raleigh, NC 27603
p: 919-838-9600 f: 919-838-9700

lynchmykins now IMEG
301 N WEST STREET, SUITE 105
RALEIGH, NC 27603
919.782.1833 www.imegcorp.com

SECTIONS

LAKE MYRA COUNTY PARK
Wake County, NC

NORTH CAROLINA PROFESSIONAL SEAL 044996 ENGINEER SCOTT M. FRANCIS
07/27/2026

lynchmykins now IMEG
301 N WEST STREET, SUITE 105
RALEIGH, NC 27603
919.782.1833 www.imegcorp.com

IMEG RESERVES PROPRIETARY RIGHTS, INCLUDING COPYRIGHTS, TO THIS DRAWING AND THE DATA SHOWN THEREON. SAID DRAWING AND/OR DATA ARE THE EXCLUSIVE PROPERTY OF IMEG AND SHALL NOT BE USED OR REPRODUCED FOR ANY OTHER PROJECT WITHOUT THE EXPRESS WRITTEN APPROVAL AND PARTICIPATION OF IMEG. ©2025 IMEG CONSULTANTS CORP.

North Carolina Design Registration #F-1507

REVISIONS

Date07/27/2026

ES-S302

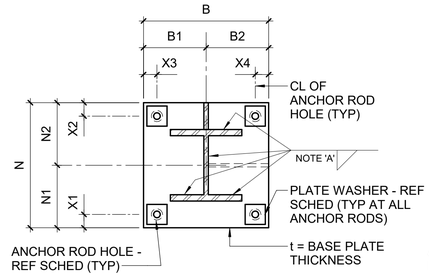

WF

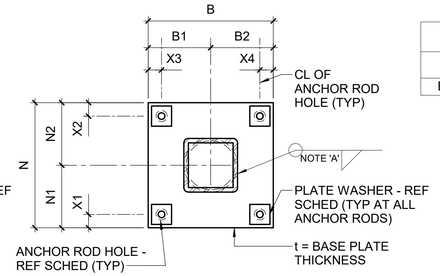

HSS

COLUMN BASE PLATE SCHEDULE - GRAVITY COLUMNS

MARK	BASE PLATE DIMENSIONS											ANCHOR RODS			REMARKS
	B	N	t	B1	B2	N1	N2	X1	X2	X3	X4	DIAMETER	QUANTITY	EMBED	
BPG-1	16"	16"	3/4"	8"	8"	8"	8"	1 1/2"	1 1/2"	1 1/2"	1 1/2"	3/4"	4	9"	

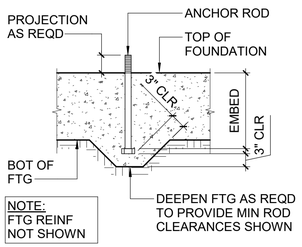

ANCHOR ROD
SHALLOW FOUNDATIONS

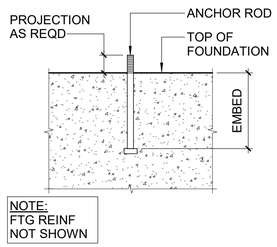

ANCHOR ROD
DEEP FOUNDATIONS

ANCHOR ROD HOLES AND WASHER SCHEDULE

ANCHOR ROD	OVERSIZED HOLE WITH PLATE WASHER				STANDARD HOLE	
	BASE PLATE HOLE	WASHER SIZE	WASHER HOLE	WASHER THICKNESS	BASE PLATE HOLE	WASHER
3/4"Ø	1 5/16"Ø	2" SQ	13/16"Ø	1/4"	1 1/16"Ø	ASTM F844
1"Ø	1 13/16"Ø	3" SQ	1 1/16"Ø	3/8"	1 1/2"Ø	ASTM F844

NOTE:
A. PROVIDE MINIMUM SIZE WELD PER AISC TABLE J2.4.

B. GENERAL CONTRACTOR'S OPTION TO USE STANDARD OR OVERSIZED HOLES IN GRAVITY COLUMN BASE PLATES. NO WELDING REQUIRED AT PLATE WASHERS USED WITH OVERSIZED HOLES.

C1 GRAVITY COLUMN BASE PLATE AND ANCHOR ROD DETAILS
NTS

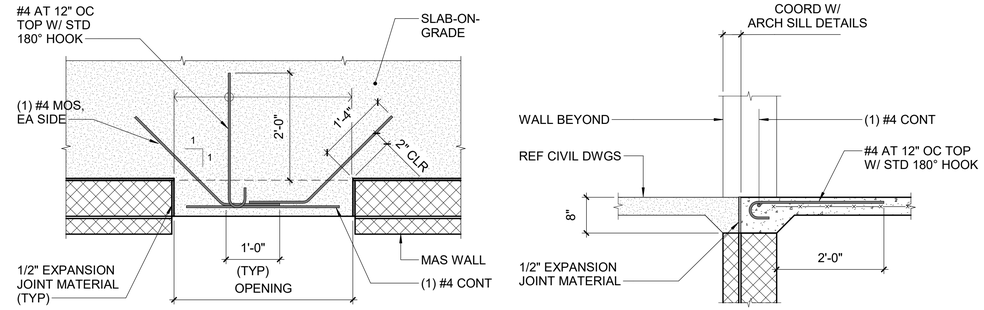

PLAN

SECTION

C2 TYPICAL EXTERIOR DOORS / OPENINGS DETAIL
NTS

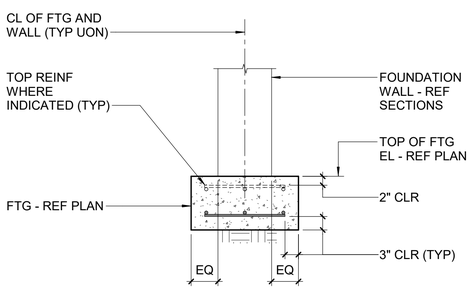

B1 TYPICAL WALL FOOTING DETAIL
NTS

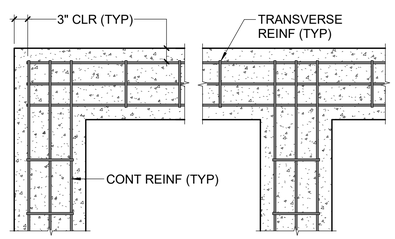

B2 TYPICAL WALL FOOTING CORNER & INTERSECTION DETAILS
NTS

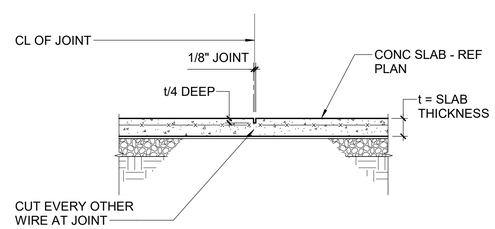

B3 TYPICAL SAWED JOINT DETAIL
NTS

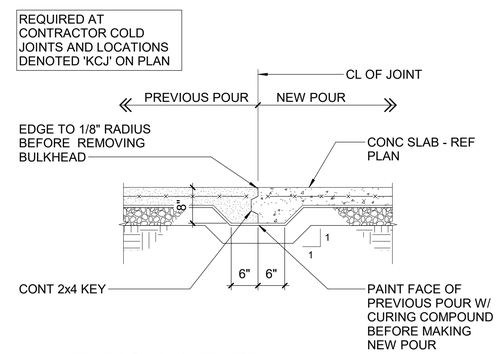

B4 TYPICAL KEYED CONSTRUCTION JOINT DETAIL
NTS

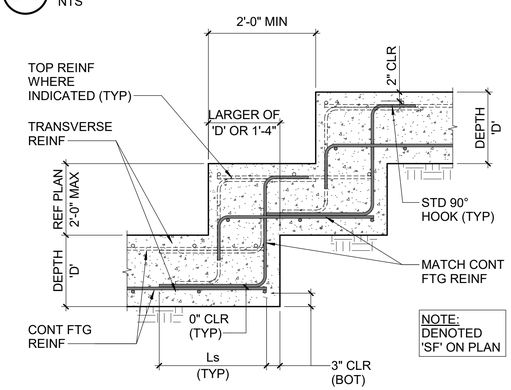

A1 TYPICAL STEPPED WALL FOOTING DETAIL
NTS

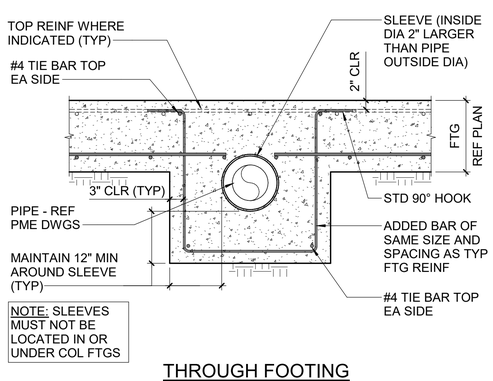

THROUGH FOOTING

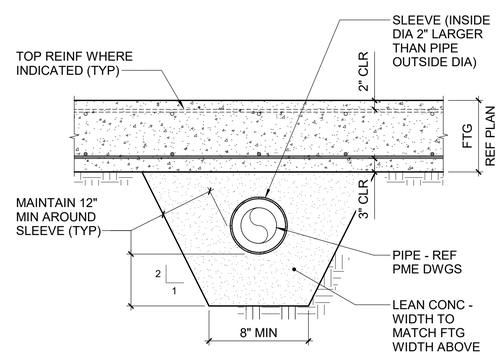

BELOW FOOTING

A2 TYPICAL PIPE SLEEVE AT WALL FOOTING DETAILS
NTS

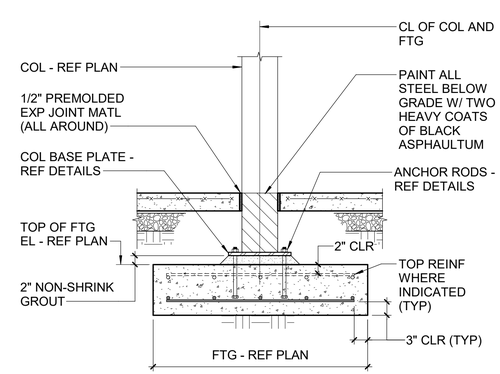

A3 TYPICAL COLUMN & FOOTING DETAIL
NTS

Susan Hatchell
Landscape Architecture, PLLC
711 W. North Street, Raleigh, NC 27603
p: 919-838-9600 f: 919-838-9700

lynch mykins now IMEG
301 N WEST STREET, SUITE 105
RALEIGH, NC 27603
919.782.1833 www.imegcorp.com

TYPICAL DETAILS

LAKE MYRA COUNTY PARK
Wake County, NC

NORTH CAROLINA PROFESSIONAL SEAL 044996 ENGINEER SCOTT M. FRANCIS
07/27/2026

REVISIONS

lynch mykins now IMEG
301 N WEST STREET, SUITE 105
RALEIGH, NC 27603
919.782.1833 www.imegcorp.com

IMEG RESERVES PROPRIETARY RIGHTS, INCLUDING COPYRIGHTS. TO THIS DRAWING AND THE DATA SHOWN THEREON. SAID DRAWING AND/OR DATA ARE THE EXCLUSIVE PROPERTY OF IMEG AND SHALL NOT BE USED OR REPRODUCED FOR ANY OTHER PROJECT WITHOUT THE EXPRESS WRITTEN APPROVAL AND PARTICIPATION OF IMEG. ©2025 IMEG CONSULTANTS CORP.
North Carolina Design Registration #F-1507

Date07/27/2026

ES-S501

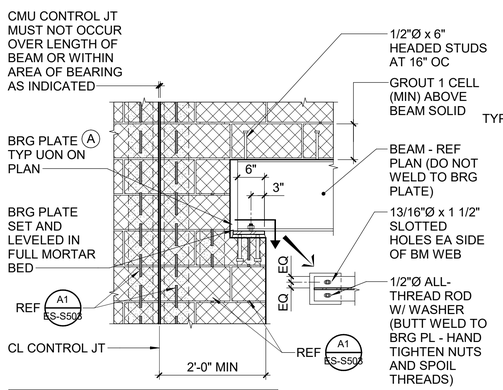

NOTE: REFER TO ARCHITECTURAL DRAWINGS FOR SIZE AND LOCATION OF OPENINGS AND FOR LINTEL ELEVATIONS.

PARALLEL TO WALL ELEVATION (TYPICAL WF)

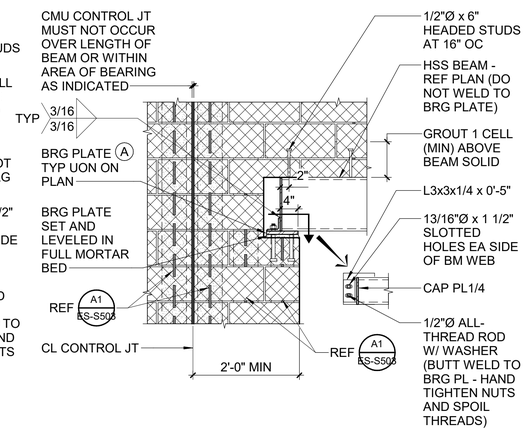

PARALLEL TO WALL ELEVATION (TYPICAL HSS)

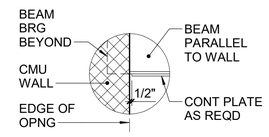

BOTTOM PLATE EXTENTS

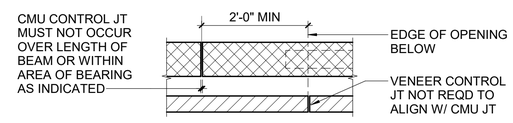

CMU vs VENEER CONTROL JOINTS

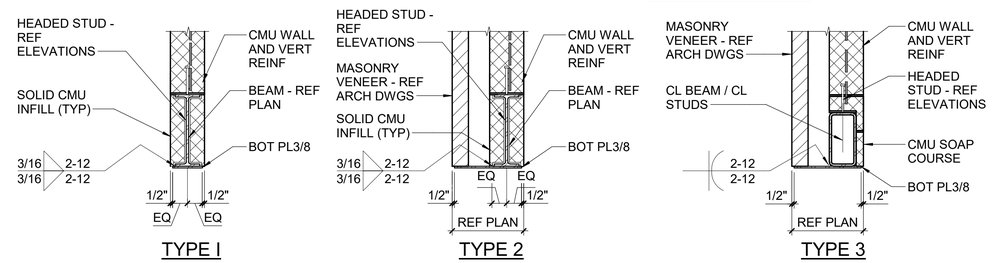

TYPICAL BOTTOM PLATE DETAILS

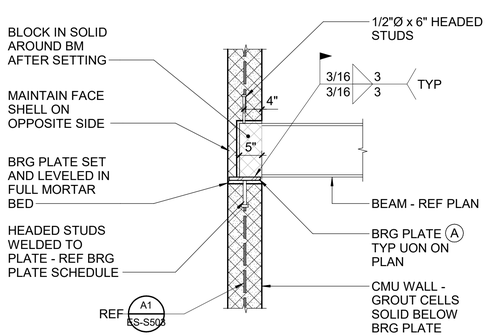

PERPENDICULAR TO WALL SECTION (TYPICAL)

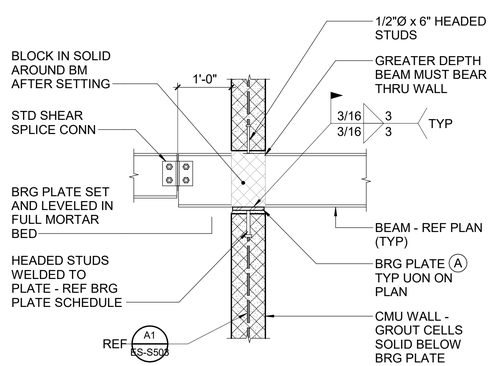

PERPENDICULAR TO WALL SECTION (COMMON BEARING)

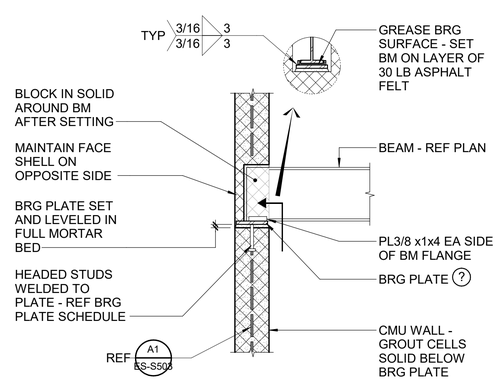

PERPENDICULAR TO WALL SECTION (SLIP CONNECTION)

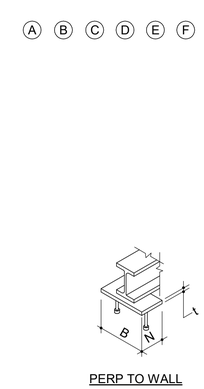

PERP TO WALL PARALLEL TO WALL

ISOMETRIC VIEW BEARING PLATES

(A1) TYPICAL STEEL BEAM BEARING ON MASONRY DETAILS

NTS

Susan Hatchell
Landscape Architecture, PLLC
711 W. North Street, Raleigh, NC 27603
p: 919-838-9600 f: 919-838-9700

lynchmykins now IMEG
301 N WEST STREET, SUITE 105
RALEIGH, NC 27603
919.782.1833 www.imegcorp.com

TYPICAL DETAILS

LAKE MYRA COUNTY PARK
Wake County, NC

NORTH CAROLINA PROFESSIONAL SEAL 044996 ENGINEER SCOTT M. FRANCIS
07/27/2026

REVISIONS

lynchmykins now IMEG
301 N WEST STREET, SUITE 105
RALEIGH, NC 27603
919.782.1833 www.imegcorp.com

IMEG RESERVES PROPRIETARY RIGHTS, INCLUDING COPYRIGHTS. TO THIS DRAWING AND THE DATA SHOWN THEREON. SAID DRAWING AND/OR DATA ARE THE EXCLUSIVE PROPERTY OF IMEG AND SHALL NOT BE USED OR REPRODUCED FOR ANY OTHER PROJECT WITHOUT THE EXPRESS WRITTEN APPROVAL AND PARTICIPATION OF IMEG. ©2025 IMEG CONSULTANTS CORP.
North Carolina Design Registration #F-1507

Date07/27/2026

ES-S502

BOND BEAM LINTEL SCHEDULE				
CLEAR SPAN	DEPTH 'D'	REINFORCING		
		6" CMU	8"&10" CMU	12" CMU
0" TO 3'-4"	8"	(1) #4 BOT	(2) #4 BOT	(2) #5 BOT
3'-5" TO 5'-4"	8"	(1) #5 BOT	(2) #5 BOT	(2) #5 BOT
5'-5" TO 6'-8"	16"	(1) #5 BOT	(2) #5 BOT	(2) #5 BOT
6'-9" TO 8'-0"	16"	(1) #5 T&B	(2) #5 T&B	(2) #5 T&B

NOTES:
1. REFER TO ARCHITECTURAL DRAWINGS FOR SIZE AND LOCATION OF OPENINGS; FOR DUCT OPENINGS REFER TO MECHANICAL DRAWINGS.
2. REFER TO ARCHITECTURAL DRAWINGS FOR WIDTH OF LINTEL.
3. SCHEDULE APPLIES ONLY TO LINTELS NOT OTHERWISE SHOWN ON THE DRAWINGS.

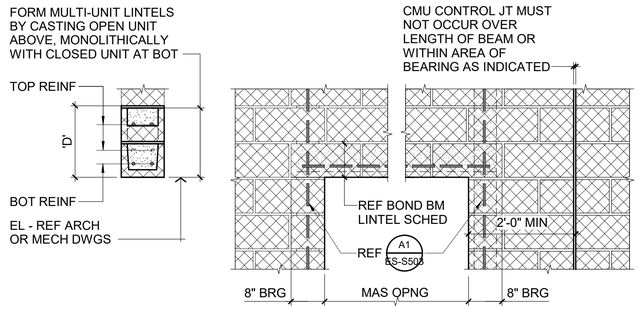

C1 BOND BEAM LINTEL DETAILS
NTS

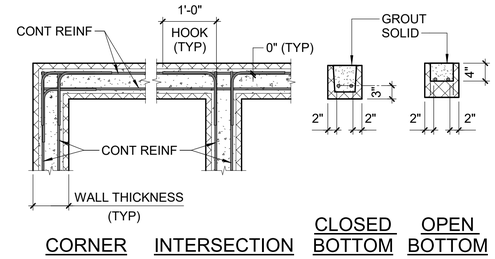

C2 TYPICAL BOND BEAM REINFORCING DETAILS
NTS

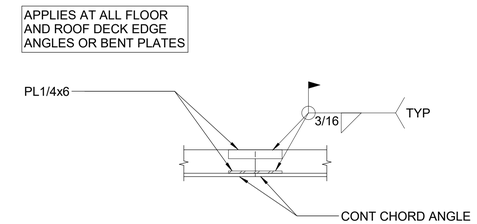

C3 TYPICAL ANGLE DIAPHRAGM CHORD SPLICE DETAIL
NTS

GROUT DIMENSION SCHEDULE		
DIM	FLOOR	ROOF
'A'	14" MIN	8" MIN
'B'	18" MIN	12" MIN

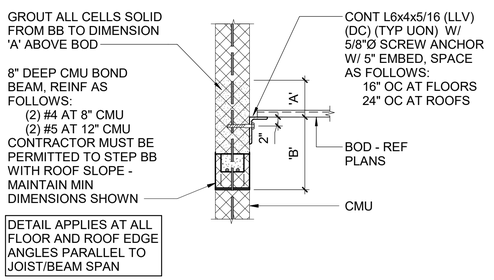

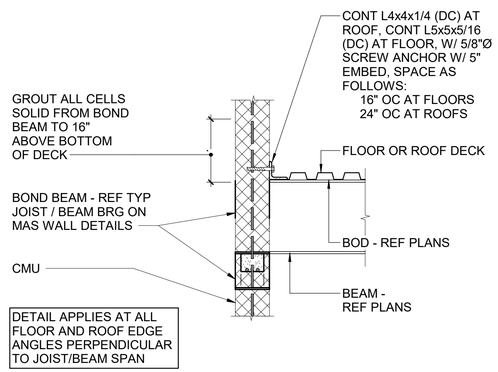

B1 TYPICAL MASONRY ANCHORAGE DETAILS
NTS

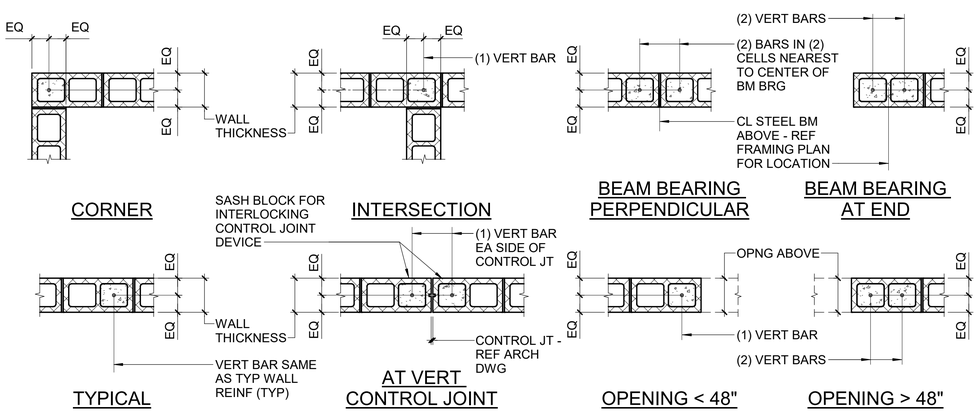

A1 TYPICAL CONCRETE MASONRY REINFORCING DETAILS
NTS

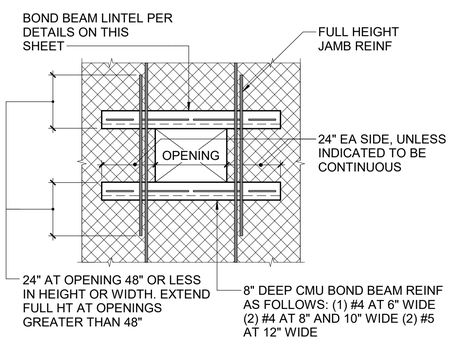

A2 TYPICAL MASONRY REINFORCING AT WALL OPENING DETAIL
NTS

Susan Hatchell
Landscape Architecture, PLLC
711 W. North Street, Raleigh, NC 27603
p: 919-838-9600 f: 919-838-9700

lynchmykins now IMEG
301 N WEST STREET, SUITE 105
RALEIGH, NC 27603
919.782.1833 www.imegcorp.com

TYPICAL DETAILS

LAKE MYRA COUNTY PARK
Wake County, NC

NORTH CAROLINA PROFESSIONAL SEAL 044996 ENGINEER SCOTT M. FRANCIS
07/27/2026

REVISIONS

lynchmykins now IMEG
301 N WEST STREET, SUITE 105
RALEIGH, NC 27603
919.782.1833 www.imegcorp.com

IMEG RESERVES PROPRIETARY RIGHTS, INCLUDING COPYRIGHTS. TO THIS DRAWING AND THE DATA SHOWN THEREON. SAID DRAWING AND/OR DATA ARE THE EXCLUSIVE PROPERTY OF IMEG AND SHALL NOT BE USED OR REPRODUCED FOR ANY OTHER PROJECT WITHOUT THE EXPRESS WRITTEN APPROVAL AND PARTICIPATION OF IMEG. ©2025 IMEG CONSULTANTS CORP.
North Carolina Design Registration #F-1507

Date07/27/2026

ES-S503

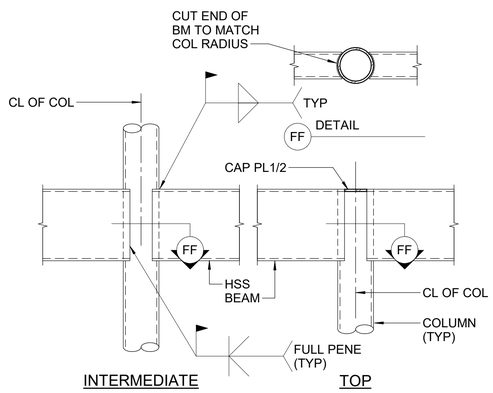

B1 TYPICAL HSS BEAM TO HSS ROUND COLUMN MOMENT CONNECTION DETAILS
NTS

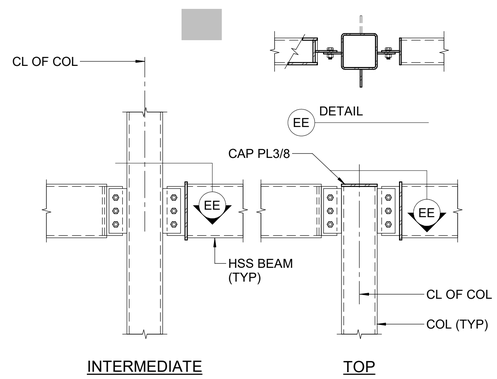

B2 TYPICAL HSS BEAM TO HSS COLUMN CONNECTION DETAILS
NTS

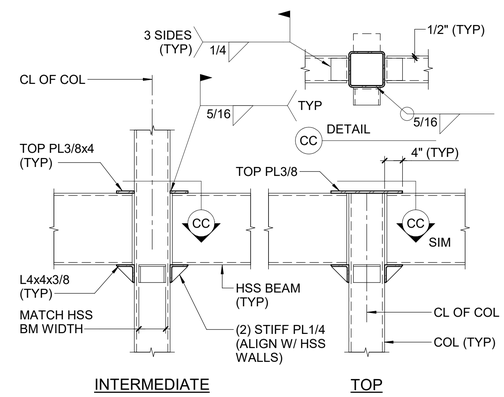

B3 TYPICAL HSS BEAM TO HSS COLUMN CONNECTION DETAILS
NTS

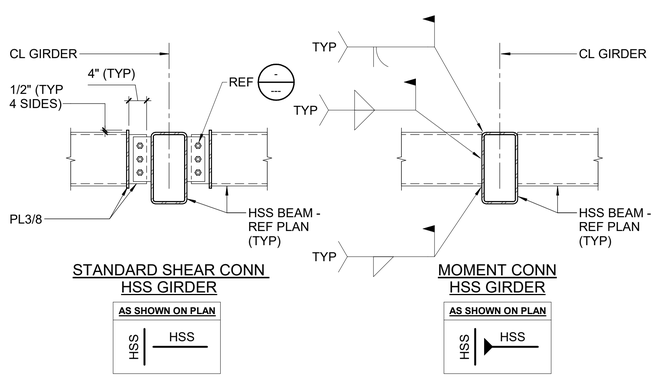

A1 TYPICAL HSS BEAM TO GIRDER CONNECTION DETAILS
NTS

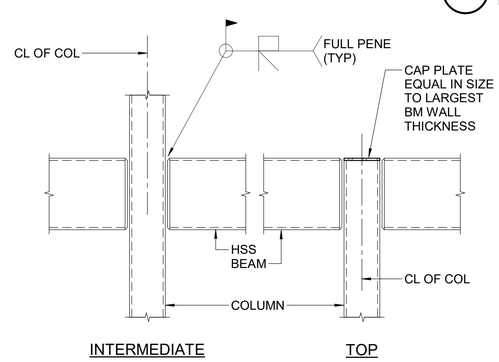

A2 TYPICAL HSS BEAM TO HSS COLUMN MOMENT CONNECTION DETAILS
NTS

Susan Hatchell
Landscape Architecture, PLLC
711 W. North Street, Raleigh, NC 27603
p: 919-838-9600 f: 919-838-9700

lynchmykins now IMEG
301 N WEST STREET, SUITE 105
RALEIGH, NC 27603
919.782.1833 www.imegcorp.com

TYPICAL DETAILS

LAKE MYRA COUNTY PARK
Wake County, NC

NORTH CAROLINA PROFESSIONAL SEAL 044996 ENGINEER SCOTT M. FRANCIS
07/27/2026

lynchmykins now IMEG
301 N WEST STREET, SUITE 105
RALEIGH, NC 27603
919.782.1833 www.imegcorp.com

IMEG RESERVES PROPRIETARY RIGHTS, INCLUDING COPYRIGHTS, TO THIS DRAWING AND THE DATA SHOWN THEREON. SAID DRAWING AND/OR DATA ARE THE EXCLUSIVE PROPERTY OF IMEG AND SHALL NOT BE USED OR REPRODUCED FOR ANY OTHER PROJECT WITHOUT THE EXPRESS WRITTEN APPROVAL AND PARTICIPATION OF IMEG. ©2025 IMEG CONSULTANTS CORP.
North Carolina Design Registration #F-1507

REVISIONS

Date07/27/2026

ES-S504

General Plan Symbols

- Plan Revision Number
- Detail Number on Sheet / Sheet Number Where Detail is Placed
- Keynote Symbol
- Continuation Symbol
- Point Where New Connects To Existing
- ROOM 1 — Room Name / Number
- Area Being Demolished
- Area Not In Contract

Abbreviations

Ø	ROUND	LVR	LOUVER
ABV	ABOVE	LWT	LEAVING WATER TEMPERATURE
AC	AIR CONDITIONING	M/A	MIXED AIR
AD	AREA DRAIN	MAX	MAXIMUM
ADD	ADDENDUM	MBH	ONE THOUSAND BTU PER HOUR
AFF	ABOVE FINISHED FLOOR	MCF	ONE THOUSAND CUBIC FEET
AFUE	ANNUAL FUEL UTILIZATION EFFICIENCY	MD	MOTORIZED DAMPER
ALT	ALTERNATE	MECH	MECHANICAL
AP	ACCESS PANEL	MFR	MANUFACTURER
ARCH	ARCHITECT/ARCHITECTURAL	MIN	MINIMUM
BFF	BELOW FINISHED FLOOR	MISC	MISCELLANEOUS
BLW	BELOW	MTR	MOTOR
BTU	BRITISH THERMAL UNITS	MU/A	MAKE-UP/AIR
BTUH	BRITISH THERMAL UNITS PER HOUR	NC	NOISE CRITERIA
CAP	CAPACITY	NC	NORMALLY CLOSED
CB	CATCH BASIN	NIC	NOT IN CONTRACT
CFM	CUBIC FEET PER MINUTE	NO	NUMBER
CLG	CEILING	NO	NORMALLY OPEN
CO	CLEAN OUT	NTS	NOT TO SCALE
CW	COLD WATER	O	OXYGEN
D	DEGREE	O/A	OUTSIDE AIR
DB	DRY BULB	ORD	OVERFLOW ROOF DRAIN
DIA	DIAMETER	PD	PRESSURE DROP
DN	DOWN	PIV	POST INDICATOR VALVE
DW	DISTILLED WATER	PLBG	PLUMBING
EA	EACH	PRESS	PRESSURE
EAT	ENTERING AIR TEMPERATURE	PRV	PRESSURE REDUCING VALVE
ELEC	ELECTRICAL	PSI	POUNDS PER SQUARE INCH
EQUIP	EQUIPMENT	PSIG	POUNDS PER SQUARE INCH GAUGE
EWC	ELECTRIC WATER COOLER	PWR	POWER
EWT	ENTERING WATER TEMPERATURE	R	DUCT RISER
E/A	EXHAUST AIR	R/A	RETURN AIR
EXIST	EXISTING	RCP	RADIANT CEILING PANEL
F	DEGREES FAHRENHEIT	RD	ROOF DRAIN
FCO	FLOOR CLEAN OUT	REC	RECESSED
FD	FLOOR DRAIN	RED	REDUCER
FDC	FIRE DEPARTMENT CONNECTION	RH	RELATIVE HUMIDITY
FL	FLOOR	RL/A	RELIEF AIR
FO	FUEL OIL	RM	ROOM
FOV	FUEL OIL VENT	RPM	REVOLUTIONS PER MINUTE
FOR	FUEL OIL RETURN	RW	RAIN WATER
FOS	FUEL OIL SUPPLY	SF	SQUARE FOOT
FPM	FEET PER MINUTE	S/A	SUPPLY AIR
FS	FLOOR SINK	SAN	SANITARY
FT	FOOT/FEET	SF	SQUARE FOOT
FTR	FIN TUBE RADIATION	SD	SMOKE DAMPER
GAL	GALLON	SM	SURFACE MOUNT
GF	GAS-FIRED	SP	STANDPIPE
GC	GENERAL CONTRACTOR	SP	STATIC PRESSURE
GPM	GALLONS PER MINUTE	STM	STEAM
GW	GREASE WASTE	T	THERMOSTAT
HB	HOSE BIB	TD	TEMPERATURE DROP
HP	HORSE POWER	TDR	TRENCH DRAIN
HTG	HEATING	TEMP	TEMPERATURE
HTR	HEATER	TYP	TYPICAL
HW	HOT WATER	UG	UNDERGROUND
HYD	HYDRANT	VAC	VACUUM
ID	INDIRECT	V	VENT
IN	INCH	VAV	VARIABLE AIR VOLUME
INV	INVERT	VENT	VENTILATION
LB	POUND	VTR	VENT THROUGH ROOF
LB/HR	POUNDS PER HOUR	W	WASTE
LAT	LEAVING AIR TEMPERATURE	WB	WET BULB
LP	LOW PRESSURE	WCO	WALL CLEAN OUT
LPG	LIQUEFIED PETROLEUM GAS	WH	WALL HYDRANT

Equipment Abbreviations

AC	AIR CONDITIONING UNIT	ET	EXPANSION TANK
ACCU	AIR COOLING CONDENSING UNIT	EWH	ELECTRIC WATER HEATER
AHU	AIR HANDLING UNIT	FCU	FAN COIL UNIT
AS	AIR SEPARATOR	FP	FIRE PUMP
B	BOILER	GI	GREASE INTERCEPTOR
CH	CHILLER	GRV	GRAVITY ROOF VENTILATOR
CT	COOLING TOWER	HWP	HEATING WATER PUMP
CUH	CABINET UNIT HEATER	HRU	HEAT RECOVERY UNIT
CHWP	CHILLED WATER PUMP	PRV	POWER ROOF VENTILATOR
DBP	DOMESTIC WATER BOOSTER PUMP	RE	RETURN/EXHAUST FAN
DC	DUCT MOUNTED COIL	RTU	ROOFTOP UNIT
DCP	DOMESTIC WATER CIRCULATING PUMP	SP	SUMP PUMP
EF	EXHAUST FAN	UH	UNIT HEATER
EDC	ELECTRIC DUCT COIL	WH	WATER HEATER

* NOTE *

ALL OF GENERAL NOTES ON THIS SHEET ARE TO BE APPLIED TO ALL OTHER DRAWINGS IN THIS SET.THE SYMBOLS AND ABBREVIATIONS SHOWN ON THIS SHEET MAY OR MAY NOT BE USED IN THIS SET OF DRAWINGS.

Plumbing Symbols

- 2" — Nominal Pipe Size
- Above Ground Piping
- Below Ground Piping
- 1/8" / 12" SLOPE — Pipe Slope (When Applicable)
- (E) — Existing Pipe To Remain
- Pipe To Be Demolished
- CW — Domestic Cold-Water
- NPW — Non-Potable Water
- S-CW — Soft Cold-Water
- F-CW — Filtered Cold-Water
- RO — Reverse Osmosis Water
- HW — Domestic Hot-Water
- HW 140° — Domestic Hot-Water 140°
- HW-R — Hot-Water Recirculation
- HW-R 140° — Hot-Water Recirculation 140°
- SS — Sanitary Drain
- V — Sanitary Vent
- WV — Sanitary Wet Vent
- CWV — Combination DWV
- CD — Condensate Drain
- ID — Indirect Drain
- GW — Grease Waste
- GV — Grease Vent
- OW — Oil Waste
- OV — Oil Vent
- PD — Pump Discharge
- SHWR — Solar Water Return
- SHWS — Solar Water Supply
- SD — Storm Drain
- OSD — Storm Overflow
- CA — Compressed Air
- G — Natural Gas
- LP — Liquid Propane
- Pipe Rise / Drop

Pipe Accessory Notes

- 4" FCO — Cleanout
- 2" BACKWATER — Swing Check
- 2" CHECK — Check Valve
- 2" CHECK — Alternate Check Valve
- 2" BALANCE — Balancing Valve
- 2" CIRC — Circuit Setter
- 2" GATE — Gate Valve
- 2" QUICK — Quick Opening Valve
- 2" S/O — Ball Valve
- 2" STRAIN — Fluid Strainer
- S — 1" GAS-CNTRL — Emergency Gas Shutoff
- 1" PLUG — Plug Valve
- 1" GAS COCK — Gas Shutoff Cock
- P — 1" REG — Gas Regulator
- T/P — 1" T/V — Thermostatic Valve
- T/P — PRIMER — Trap Primer
- M — 2" M-CNTRL — Elec. Control Valve
- T/P — TMV-XT/P — Mixing Valve
- EM — TMVEM — Emergency Mixer
- P — 2" PRV — Pressure Reducing Valve
- W — 2" METER — Water Meter
- IR — 1 1/2" METER — Irrigation Meter
- Double Check Valve
- Reduced Pressure Zone

Plumbing Fixture Notes

- Floor Drain — Design Size
- 0" FD-1 — Identity Type
- 2 DFU — Drainage Fixture Units
- 2" FD-3 — Floor Drain w/ Deep Seal Trap
- 2" FD-3P — Floor Drain w/ Trap Primer "P" Indicates Primer Connection
- 2" FD-7 — Floor Drain w/ Integral Cleanout
- 3" AD-1 — Area Drain (No Trap)
- 6" DD-1 — Deck Drain
- 3" HD-1 — Hub Drain (Funnel Type)
- 3" FS-4 — Floor Sink
- 8" SD-12 — Roof Drain
- 6" SD-1 — Combination Drain
- 2000 SF — Rainfall Surface Area

Plumbing General Notes

A PITCH UNDERFLOOR SANITARY WASTE PIPING AT 1/8" PER FOOT, UNLESS NOTED OTHERWISE.

B PITCH UNDERFLOOR STORM PIPING 3" AND GREATER AT 1/8" PER FOOT, UNLESS NOTED OTHERWISE. PITCH ALL OTHER STORM PIPING AT 1/4" PER FOOT UNLESS OTHERWISE NOTED.

C FIELD VERIFY LOCATION AND INVERTS OF SITE UTILITIES PRIOR TO INSTALLATION.

D ROUTE DOMESTIC WATER, SANITARY SEWER AND STORM SEWER SERVICES TO SITE UTILITIES 5'-0" FROM BUILDING UNLESS NOTED OTHERWISE. REFER TO CIVIL PLANS.

E WASTE AND VENT PIPING BELOW FLOOR AND THROUGH FLOOR SHALL BE 2" MINIMUM.

F PROVIDE CLEANOUT IN ACCESSIBLE LOCATION AT THE BASE OF ALL PLUMBING RISERS.

Plumbing Notes

1 BEFORE STARTING ANY WORK, VERIFY THE ADEQUACY, LOCATION, SIZE, AND AVAILABILITY OF ALL UTILITIES CONCERNED, INCLUDING SEWER INVERT ELEVATIONS, AND WATER PRESSURE.

2 THESE PLANS ARE DIAGRAMMATIC IN NATURE AND SHALL NOT BE SCALED TO DETERMINE THE EXACT LOCATION OR EXTENT OF THE WORK. CONTRACTOR SHALL VERIFY ALL DIMENSIONS IN THE FIELD PRIOR TO CONSTRUCTION.

3 THE CONTRACTOR SHALL COORDINATE WITH ALL OTHER TRADES FOR CLEARANCES AND WORK INCLUDED PRIOR TO START OF WORK.

4 ALL VENTS THRU ROOF SHALL BE MINIMUM OF TEN FEET FROM ANY FRESH AIR INTAKES.

5 CLEANOUTS SHALL BE INSTALLED PER CODE REQUIREMENTS.

6 PENETRATIONS OF RATED ASSEMBLIES SHALL BE FIRE STOPPED. FIRE STOPPING SHALL BE AN APPROVED MATERIAL AS PRESCRIBED IN STATE. FIRE MARSHALL STANDARD 43-1, AND SHALL BE U.L. LISTED.

7 COORDINATE WITH ELECTRICAL SECTION PRIOR TO ORDERING EQUIPMENT FOR AVAILABLE VOLTAGE AT EQUIPMENT LOCATIONS.

8 ALL FIXTURES SHALL BE PROTECTED DURING CONSTRUCTION FROM ANY DAMAGE. REFINISHED FIXTURES WILL NOT BE ACCEPTABLE UNDER ANY CONDITIONS.

9 HANDICAPPED USE PLUMBING FIXTURES SHALL BE MOUNTED AT REQUIRED HEIGHTS AND WITH ALL RELATED ACCESSORIES AS REQUIRED BY THE ADMINISTRATIVE AUTHORITIES.

10 ALL HOSE BIBBS SHALL HAVE AN APPROVED VACUUM BREAKER.

11 PROVIDE FLASHING AND/OR COUNTER FLASHING OF ALL EXTERIOR PENETRATIONS.

12 UNLESS SPECIFICALLY SHOWN ON THESE PLANS, NO STRUCTURAL MEMBER SHALL BE CUT, DRILLED, NOTCHED OR WELDED WITHOUT PRIOR WRITTEN AUTHORIZATION FROM THE STRUCTURAL ENGINEER.

13 WATER SUPPLY PIPING BELOW GRADE UNDER CONCRETE SLABS SHALL BE INSTALLED SUCH THAT NO JOINTS ARE LOCATED BENEATH THE SLAB. WHERE NECESSARY, PROVIDE OFFSET UP IN FINISHED WALL OR SIMILAR TO ACCOMMODATE JOINTS. PROVIDE LOCKING ACCESS PANEL UNLESS DIRECTED OTHERWISE. COORDINATE FINISH WITH ARCHITECT.

14.1 WATER CLOSET = 1.28 GPF MAX

14.2 URINAL = 0.125 GPF MAX

14.3 SHOWERHEAD = 1.8 GPM MAX

14.4 LAVATORY FAUCETS = 0.5 GPM MAX

14.5 SINK FAUCETS = 1.8 GPM MAX

15 HANGERS, CLAMPS AND GUIDES FURNISHED FOR SUPPORT OF NON-METALLIC PIPES SHALL BE PADDED WITH 1/8" THICK RUBBER, NEOPRENE, OR SOFT RESILIENT CLOTH.

16 COORDINATE WITH MECHANICAL AND ELECTRICAL CONTRACTORS TO ENSURE PROPER CLEARANCE ABOVE ELECTRICAL SWITCHBOARDS, SWITCHGEAR, PANELBOARDS, AND MOTOR CONTROL CENTERS WHERE REQUIRED BY CALIFORNIA ELECTRICAL CODE SECTION 110.26(E)(1) AND TO PROVIDE DRIP PANS OVER ELECTRICAL SERVICE EQUIPMENT, SWITCH GEAR, AND INDUSTRIAL CONTROL ASSEMBLIES WHERE REQUIRED BY CALIFORNIA ELECTRICAL CODE SECTION 110.34(F).

Project Requirements

A COORDINATE INSTALLATION OF PIPING, DUCTWORK, CONDUIT, LIGHTS, CABLE TRAY, STRUCTURE, AND EQUIPMENT TO PREVENT CONFLICTS.

B FINAL PRODUCT SHALL BE A COMPLETE AND FUNCTIONING SYSTEM, AND SHALL CONFORM TO ALL REQUIREMENTS OF APPLICABLE FEDERAL, STATE, AND LOCAL CODES, INCLUDING BUT NOT LIMITED TO THE INTERNATIONAL BUILDING CODE AND INTERNATIONAL MECHANICAL CODE.

C LOCATE EQUIPMENT REQUIRING ACCESS 2'-0" MAXIMUM ABOVE CEILING.

D PENETRATIONS OF RATED ASSEMBLIES SHALL BE FIRE STOPPED. FIRE STOPPING SHALL BE AN APPROVED MATERIAL AS PRESCRIBED IN CSFM STANDARD 43-1 AND SHALL BE U.L. LISTED.

E PROVIDE SLEEVES AND/OR OPENINGS TO RUN PIPES THROUGH FOUNDATIONS, FLOORS, WALLS, AND ROOF.

F MAINTAIN CLEAR ACCESS TO SERVICE EQUIPMENT AND OTHER ACCESSORIES REQUIRING SERVICE, VISUAL INSPECTION OR HAND OPERATION. WHERE INDICATED OR REQUIRED, PROVIDE ACCESS PANELS OF THE TYPE SELECTED TO SUIT MATERIALS IN WHICH INSTALLED.

G REFER TO HVAC SERIES DRAWINGS FOR GAS AND A.C. CONDENSATE DRAIN PIPING.

H PIPE SIZES SHOWN SHALL BE CONTINUED IN THE DIRECTION OF FLOW UNTIL ANOTHER SIZE IS SHOWN.

I FOR DETAILS, EQUIPMENT CONNECTIONS, AND PIPE SIZES NOT SHOWN ON THE SEGMENTS, REFER TO DETAILS, SCHEDULES, AND SPECIFICATIONS.

J INSTALL ALL EQUIPMENT IN ACCORDANCE WITH THE RESPECTIVE MANUFACTURER'S WRITTEN INSTALLATION INSTRUCTIONS, AT A LEVEL OF QUALITY AND WORKMANSHIP CONSISTENT WITH THE SPECIFICATIONS.

K LOCATIONS OF PIPING AND EQUIPMENT AS INDICATED ON THE DRAWING, ARE APPROXIMATE AND SUBJECT TO MINOR ADJUSTMENTS IN THE FIELD. WORK SHALL BE COORDINATED WITH ALL OTHER TRADES TO AVOID INTERFERENCE IN THE FIELD.

L INSTALL EXPOSED PIPING AS HIGH AS PRACTICAL IN ROOMS WITHOUT CEILINGS.

M THE CONTRACTOR'S WORK SCHEDULE SHALL BE SUBMITTED TO AND APPROVED BY THE OWNER.

N PRIOR TO STARTING WORK, SUBMIT SHOP DRAWINGS FOR ALL PLUMBING FIXTURES,

O CONTRACTOR SHALL OBTAIN AND PAY FOR ALL NECESSARY PERMITS AND SHALL ARRANGE FOR ALL INSPECTIONS AS REQUIRED.

P PROVIDE ONE YEAR WARRANTY FOR ALL WORKMANSHIP AND MATERIALS AFTER THE DATE OF FINAL ACCEPTANCE.

PLUMBING FIXTURE SCHEDULE

MARK	ITEM	DESCRIPTION	C.W.	H.W.	WASTE	VENT	REMARKS
EWC-1	ELECTRIC WATER COOLER	WALL MOUNTED, BI-LEVEL, 8 GPH CAPACITY WITH BOTTLE FILLER, FILTERED, REFRIGERATED AND FREEZE RESISTANT, STAINLESS STEEL TOP, ADA COMPLIANT.	1/2"	-	1 1/2"	1 1/2"	
EWC-2	ELECTRIC WATER COOLER	COMBINED BOTTLE FILLER AND SINGLE UNIT DRINKING FOUNTAIN, WALL MOUNTED, VANDAL RESISTANT BUBBLER, FREEZE RESISTANT, STAINLESS STEEL, FILTERLESS, NON-REFRIGERATED, ADA COMPLIANT. SINK SHALL BE WINTERIZED BY DRAINING SUPPLY LINES. COVER SINK TO PROTECT FROM ELEMENT DUE TO COLD CONDITIONS. WASTE PIPING SHALL BE DRAINED.	1/2"	-	1 1/2"	1 1/2"	WATER SUPPLY PIPING TO BE HEAT TRACED PROVIDE WITH DRAIN VALVE FOR WINTERIZING
EWH-1	ELECTRIC WATER HEATER	ELECTRIC WATER HEATER, 30 GAL. STORAGE CAPACITY, 4.5 KW, 208V / 3 PHASE, 25 GPH @ 100 DEGREES RISE. MAXIMUM SET POINT IS 110 DEGREES.	3/4"	3/4"	-	-	WATER SOURCE HEAT PUMP
EXP-1	EXPANSION TANK	EXPANSION TANK, IN-LINE DESIGN WITH 3/4" CONNECTION, DRAWN- STEEL TANK, BUTYL DIAPHRAGM, FIELD ADJUSTABLE 40 PSI AIR CHARGE, 1.95 GAL. CAPACITY.	3/4"	-	-	-	
FD-1	FLOOR DRAIN	CAST IRON BODY WITH ANCHOR FLANGE, WEEPHOLES, HEAVY DUTY STAINLESS STEEL STRAINER, AND MEMBRANE CLAMP.	-	-	4"	2"	
HB-1	HOSE BIBB	AUTOMATIC DRAINING WITHIN TAMPER RESISTANT BRASS BOX, WALL CLAMP, AND BACKFLOW PROTECTED.	3/4"	-	-	-	
LAV-1	LAVATORY (ADA)	WALL MOUNTED, VITREOUS CHINA, FRONT OVERFLOW, PROVIDE P-TRAP, SUPPLIES, GRID STRAINER AND SEAMLESS PIPING INSULATORS. PROVIDE & INSTALL SENSOR ACTIVATED BATTERY OPERATED FAUCET, 0.5 GPM, ADA COMPLIANT.	1/2"	1/2"	1 1/2"	1 1/2"	MOUNT 34" TO RIM.
MS-1	MOP SINK	TERRAZZO FLOOR MOUNTED MOP RECEPTOR, 24" X 24" X 12", INSTALL WITH SUPPLIES, HOSE CLAMP, MOP HANGER, CHROME STRAINER AND FAUCET WITH INTEGRAL VACUUM BREAKER, DOUBLE STOPS AND BUCKET HOOK WITH WALL BRACE, 2.2 GPM.	1/2"	1/2"	3"	2"	
WC-1	WATER CLOSET (ADA)	FLOOR MOUNTED, VITREOUS CHINA, ELONGATED BOWL, GRAVITY FED. PROVIDE AND INSTALL SENSOR ACTIVATED BATTERY OPERATED FLUSH VALVE, SUPPLIES AND OPEN SEAT, 1.28 GPF, ADA COMPLIANT.	1"	-	4"	2"	
WCO-1	WALL CLEANOUT	CAST IRON WITH 1/2" THICK DUCTILE IRON COMBINED COVER AND PLUG WITH 6" DIAMETER ACCESS COVER.	-	-	4"	-	
WH-1	WALL HYDRANT	CAST BRASS BOXED WALL MOUNTED HYDRANT, NON FREEZE, AUTOMATIC DRAINING, DUAL CHECK BACK FLOW PROTECTED AND SUPPLIED WITH OPERATING KEY.	3/4"	-	-	-	
WHA-1	WATER HAMMER ARRESTOR	PRE-CHARGED, PERMANENT SEALED AIR CHAMBER. NPT SOLID BRASS ADAPTER.	SEE PLANS	-	-	-	

EASTERN PARCEL PLUMBING SHEET INDEX

ES-P001 COVER SHEET
ES-P101 FLOOR PLANS
ES-P700 DETAILS

Susan Hatchell
Landscape Architecture, PLLC
711 W. North Street, Raleigh, NC 27603
p: 919-838-9600 f: 919-838-9700

Wooten
129 North Boylan Avenue • Raleigh, NC 27603-1423
(919) 828-0531 • thewootencompany.com
License Number : F-0115

COVER SHEET

NORTH CAROLINA PROFESSIONAL ENGINEER SEAL 027928 SCOTT L. ENNIS
DocSigned by: 1E0B95366ACF412...
7/24/2026

LAKE MYRA COUNTY PARK
Wake County, NC

REVISIONS

Date: 07/27/26

ES-P001

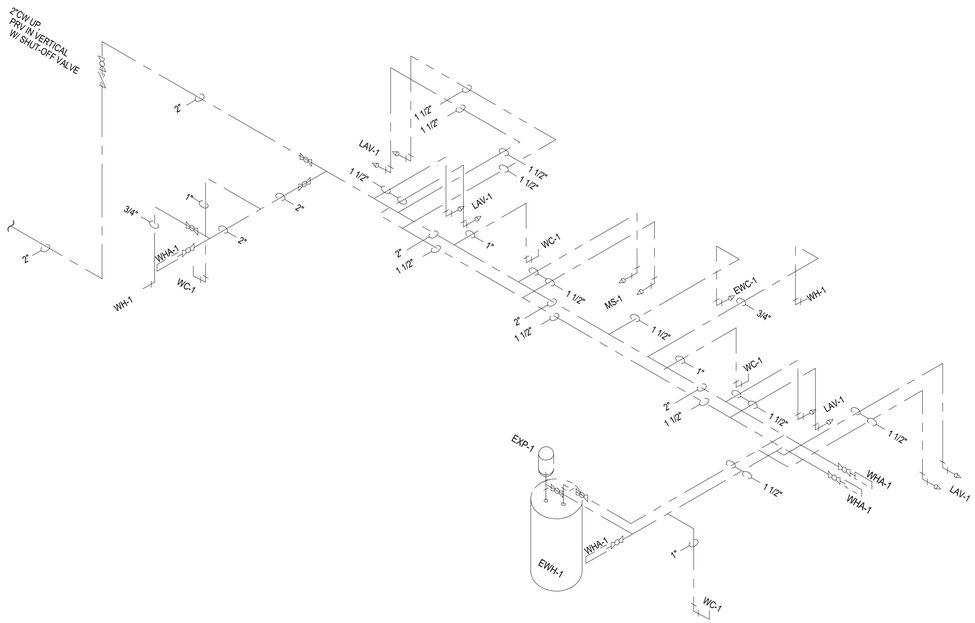

4 ES-P101 WATER SUPPLY RISER DIAGRAM
NOT TO SCALE

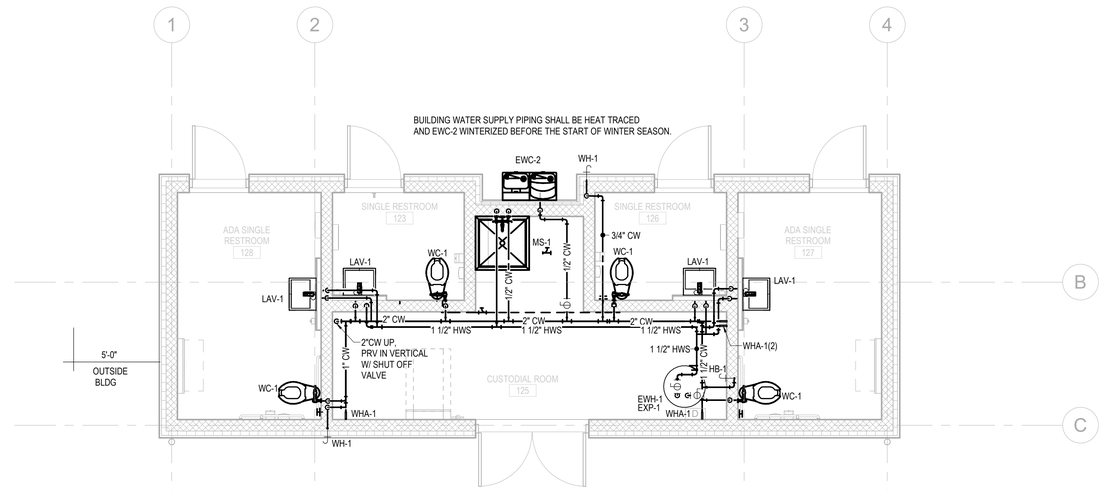

2 ES-P101 DOMESTIC WATER PLAN
1/4" = 1'-0"

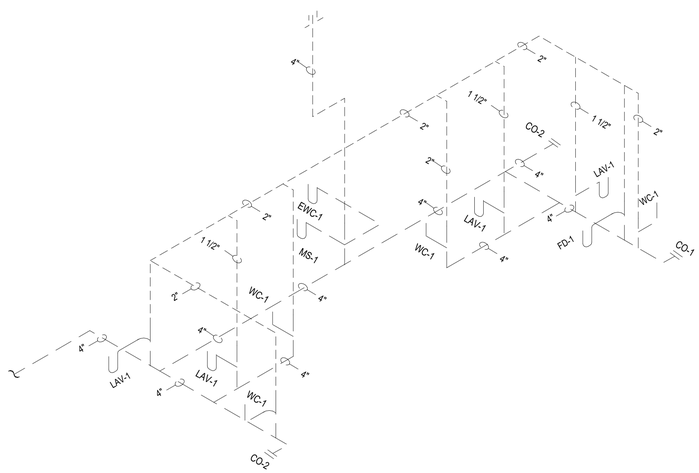

3 ES-P101 WASTE AND VENT RISER DIAGRAM
NOT TO SCALE

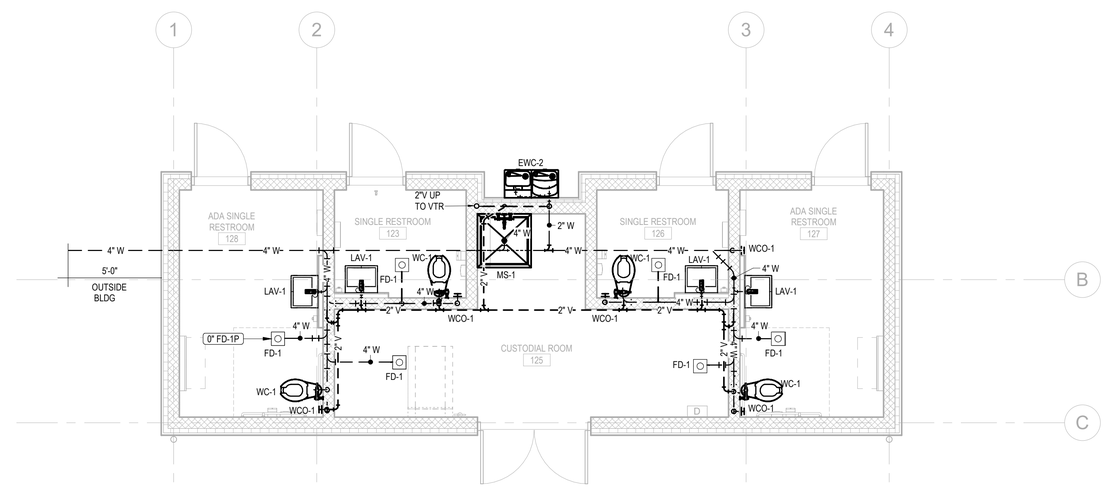

1 ES-P101 DWV PIPING PLAN
1/4" = 1'-0"

Susan Hatchell
Landscape Architecture, PLLC
711 W. North Street, Raleigh, NC 27603
p: 919-838-9600 f: 919-838-9700

Wooten
129 North Boylan Avenue • Raleigh, NC 27603-1423
(919) 828-0531 • thewootencompany.com
License Number : F-0115

FLOOR PLANS

NORTH CAROLINA PROFESSIONAL ENGINEER SEAL 027928 SCOTT L. ENNIS
Developed by:
18D8B5B6BACF412...
7/24/2026

LAKE MYRA COUNTY PARK
Wake County, NC

REVISIONS

Date: 07/27/26

ES-P101

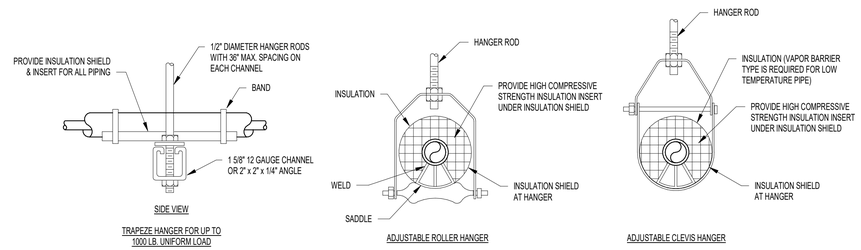

6 ES-P700 PIPE HANGER DETAIL - A
NOT TO SCALE

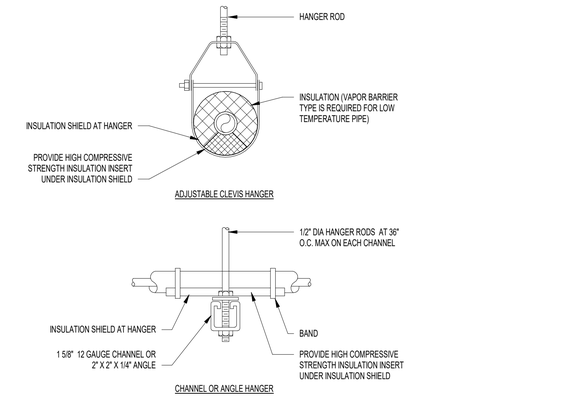

5 ES-P700 PIPE HANGER DETAIL
NOT TO SCALE

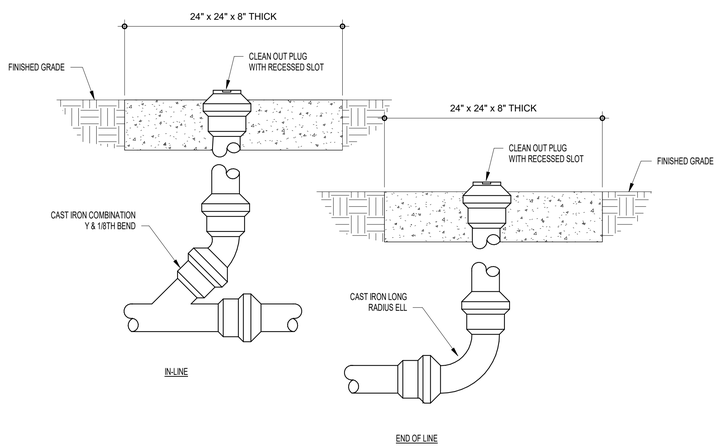

4 ES-P700 EXTERIOR CLEANOUT DETAIL
NOT TO SCALE

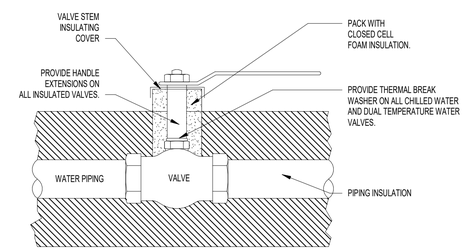

3 ES-P700 TYPICAL BALL VALVE INSTALLATION DETAIL
NOT TO SCALE

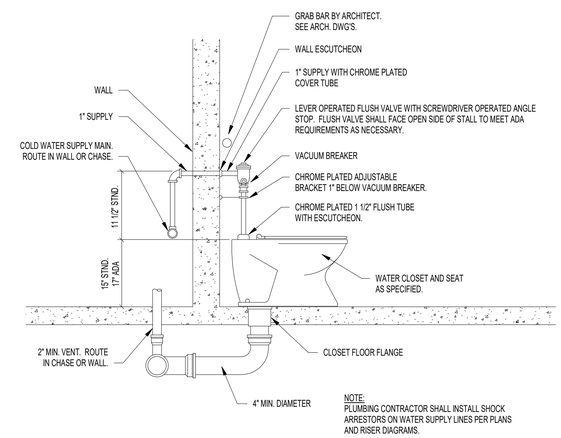

NOTE:
PLUMBING CONTRACTOR SHALL INSTALL SHOCK ARRESTORS ON WATER SUPPLY LINES PER PLANS AND RISER DIAGRAMS.

2 ES-P700 FLOOR MOUNTED WATER CLOSET DETAIL
NOT TO SCALE

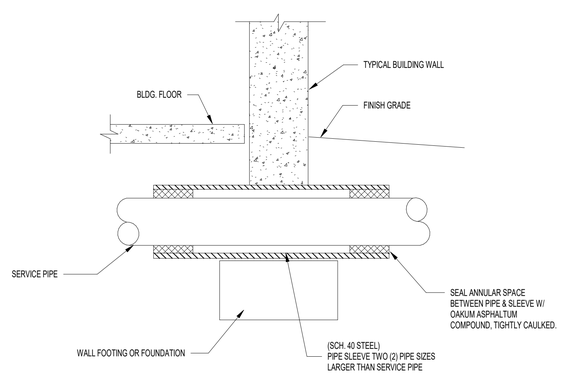

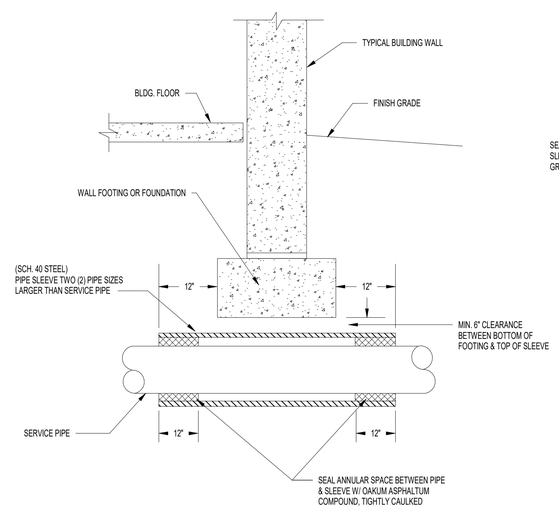

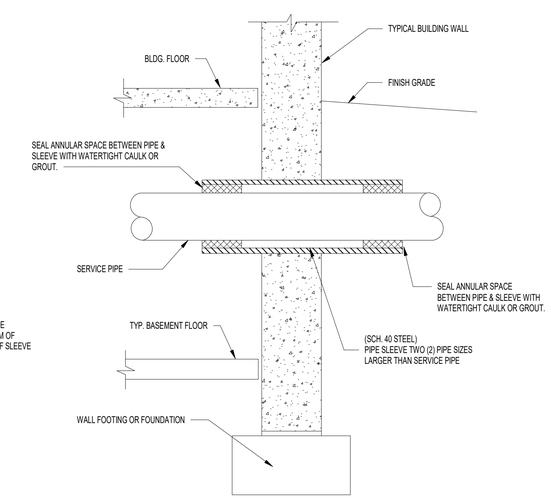

1 ES-P700 TYPICAL PIPE SLEEVE DETAIL - EASTERN PARCEL
NOT TO SCALE

Susan Hatchell
Landscape Architecture, PLLC
711 W. North Street, Raleigh, NC 27603
p: 919-838-9600 f: 919-838-9700

Wooten
129 North Boylan Avenue • Raleigh, NC 27603-1423
(919) 828-0531 • thewootencompany.com
License Number : F-0115

DETAILS

NORTH CAROLINA PROFESSIONAL ENGINEER SEAL 027928 SCOTT L. ENNIS
DocuSigned by: 1E2B9E566AC7412...
7/24/2026

LAKE MYRA COUNTY PARK
Wake County, NC

REVISIONS

Date: 07/27/26

ES-P700

General Plan Symbols

Symbol	Description
△	Plan Revision Number
⊖	Detail Number on Sheet / Sheet Number Where Detail is Placed
1	Keynote Symbol
≀	Continuation Symbol
●	Point Where New Connects To Existing
ROOM 1	Room Name / Number
(hatched)	Area Being Demolished
(crosshatched)	Area Not In Contract

HVAC Symbols

Symbol	Description
24"x12"	Sq. Duct Size (Width x Height)
24"/12"	Oval Duct Size (Width / Height)
18"Ø	Round Duct Size (Diameter)
(E)	Existing Duct To Remain
	Duct To Be Demolished
S/A	Supply Air
V/A	Ventilation Air
O/A	Outdoor Air
R/A	Return Air
T/A	Transfer Air
L/A	Building Relief Air
E/A	General Exhaust Air
KED	Kitchen Exhaust Duct
LH	Laboratory Hood
ETS	Env. Tobacco Smoke
FLUE	Flue Gas Vent
C/A	Combustion Air
	Rect. Supply Duct Rise / Drop
	Round Supply Duct Rise / Drop
	Rect. Return Duct Rise / Drop
	Round Return Duct Rise / Drop
	Rect. Exhaust Duct Rise / Drop
	Round Exhaust Duct Rise / Drop

Grille, Register, Diffusers

Square Ceiling Diffuser: Q 500 / 10"Ø/24x24 / 29 H6/9/17 — Type (See Schedule); Airflow; Neck Size / Module Size; Catalog Throw Performance; Throw Pattern; Max NC Rating

Round Ceiling Diffuser: CD11 100 / 6"Ø / TYP. X 4 — Airflow; Neck Size; Type Count for Space

Sidewall Supply Grille: F 500 / 18"x10" / AFF:9'-0" — Airflow; Nominal Duct Size; Mounting Elevation (Centerline)

Supply: G 200 — Airflow; Neck Size/ Slot(s)/ Active Length

Sidewall Return Grille: T 800 / 16"x0" / AFF:9'-0" — Airflow; Nominal Duct Size; Mounting Elevation (Centerline)

Ceiling Return: S 500 / 12"x0"/24x24 / 25 — Airflow; Neck Size / Module Size; Max NC Rating

Mechanical Equipment

Tag	Description
RTU-1	Unit Identity
10.0 ton	Nominal Cooling Capacity
RTU-1	
180000 Btu/h	Heating Capacity
180 CFH	Gas Supply Input Rate
ET-1 / 379 lb	Operating Weight
EF-XX / 500 CFM	Design Airflow Rate
VAV 1-2 / 3.7 GPM	Design Water Flow
AC-1 / AFF:7'-0"	Bottom of Equipment Height
(E)AHU-2	Existing to Remain Equipment
(R)AHU-3	Existing Relocated Equipment
	Equipment By Others (Refer To Other Disciplines)

Damper Types

Symbol	Description
B	Manual Damper
M	Motorized Damper
	Backdraft Damper
S	Smoke Damper
●	Fire Damper
● S	Comb. Fire/ Smoke Damper

Mechanical Piping Symbols

Symbol	Description
2"	Nominal Pipe Size
	Above Ground Piping
	Below Ground Piping
1/8" / 12" SLOPE	Pipe Slope (When Applicable)
(E)	Existing Pipe To Remain
	Pipe To Be Demolished
CHWR	Chilled-Water Return
CHWS	Chilled-Water Supply
CD	Condensate Drain
CWR	Condenser-Water Return
CWS	Condenser-Water Supply
GWR	Geothermal-Water Return
GWS	Geothermal-Water Supply
HWR	Hot-Water Return
HWS	Hot-Water Supply
G	Natural Gas
LP	Liquid Propane
RL	Refrigerant Liquid
RS	Refrigerant Gas
RD	Refrigerant Discharge
STM	Steam Supply
CDR	Steam Condensate Return
	Pipe Rise / Drop

Valve Types

Symbol	Description
2" SHUTOFF	Ball Valve
2" BAL	Balancing Valve
2" BFV	Butterfly Valve
2" CHECK	Check Valve
2" CHECK	Alternate Check Valve
3" CIRC	Circuit Setter
2" GATE	Gate Valve
2" GLOBE	Globe Valve
2" LOCK	Locked Shield Valve
2" PRV	Pressure Reducing Valve
2" QUICK	Quick Opening Valve
2" STRAIN	Fluid Strainer
2" M-CNTRL	Elec. Control Valve
4" 3-WAY CNTRL	3-Way Elec. Valve
1" GAS-CNTRL	Emergency Gas Shutoff
1" PLUG	Plug Valve
1" GAS COCK	Gas Shutoff Cock
1" REG	Gas Regulator

Mechanical Devices

Symbol	Description
AHU-1	Unit Identity
TS	Temperature Sensor
TH	Temp/ Humidity Sensor
TC	Temp/ CO2 Sensor
T	Thermostat
H	Humidistat
HS	Humidity Sensor
CO2	Carbon Dioxide Detector
CO	Carbon Monoxide Detector
H2	Hydrogen Gas Detector
HZG	Hazardous Gas Detector
NO2	Nitrogen Dioxide Detector
O2	Oxygen Gas Detector

Abbreviations

Ø	ROUND	LVR	LOUVER
ABV	ABOVE	LWT	LEAVING WATER TEMPERATURE
AC	AIR CONDITIONING	M/A	MIXED AIR
AD	AREA DRAIN	MAX	MAXIMUM
ADD	ADDENDUM	MBH	ONE THOUSAND BTU PER HOUR
AFF	ABOVE FINISHED FLOOR	MCF	ONE THOUSAND CUBIC FEET
AFUE	ANNUAL FUEL UTILIZATION EFFICIENCY	MD	MOTORIZED DAMPER
ALT	ALTERNATE	MECH	MECHANICAL
AP	ACCESS PANEL	MFR	MANUFACTURER
ARCH	ARCHITECT/ARCHITECTURAL	MIN	MINIMUM
BFF	BELOW FINISHED FLOOR	MISC	MISCELLANEOUS
BLW	BELOW	MTR	MOTOR
BTU	BRITISH THERMAL UNITS	MU/A	MAKE-UP/AIR
BTUH	BRITISH THERMAL UNITS PER HOUR	NC	NOISE CRITERIA
CAP	CAPACITY	NC	NORMALLY CLOSED
CB	CATCH BASIN	NIC	NOT IN CONTRACT
CFM	CUBIC FEET PER MINUTE	NO	NUMBER
CLG	CEILING	NO	NORMALLY OPEN
CO	CLEAN OUT	NTS	NOT TO SCALE
CW	COLD WATER	O	OXYGEN
D	DEGREE	O/A	OUTSIDE AIR
DB	DRY BULB	ORD	OVERFLOW ROOF DRAIN
DIA	DIAMETER	PD	PRESSURE DROP
DN	DOWN	PIV	POST INDICATOR VALVE
DW	DISTILLED WATER	PLBG	PLUMBING
EA	EACH	PRESS	PRESSURE
EAT	ENTERING AIR TEMPERATURE	PRV	PRESSURE REDUCING VALVE
ELEC	ELECTRICAL	PSI	POUNDS PER SQUARE INCH
EQUIP	EQUIPMENT	PSIG	POUNDS PER SQUARE INCH GAUGE
EWC	ELECTRIC WATER COOLER	PWR	POWER
EWT	ENTERING WATER TEMPERATURE	R	DUCT RISER
E/A	EXHAUST AIR	R/A	RETURN AIR
EXIST	EXISTING	RCP	RADIANT CEILING PANEL
F	DEGREES FAHRENHEIT	RD	ROOF DRAIN
FCO	FLOOR CLEAN OUT	REC	RECESSED
FD	FLOOR DRAIN	RED	REDUCER
FDC	FIRE DEPARTMENT CONNECTION	RH	RELATIVE HUMIDITY
FL	FLOOR	RL/A	RELIEF AIR
FO	FUEL OIL	RM	ROOM
FOV	FUEL OIL VENT	RPM	REVOLUTIONS PER MINUTE
FOR	FUEL OIL RETURN	RW	RAIN WATER
FOS	FUEL OIL SUPPLY	SF	SQUARE FOOT
FPM	FEET PER MINUTE	S/A	SUPPLY AIR
FS	FLOOR SINK	SAN	SANITARY
FT	FOOT/FEET	SF	SQUARE FOOT
FTR	FIN TUBE RADIATION	SD	SMOKE DAMPER
GAL	GALLON	SM	SURFACE MOUNT
GF	GAS-FIRED	SP	STANDPIPE
GC	GENERAL CONTRACTOR	SP	STATIC PRESSURE
GPM	GALLONS PER MINUTE	STM	STEAM
GW	GREASE WASTE	T	THERMOSTAT
HB	HOSE BIB	TD	TEMPERATURE DROP
HP	HORSE POWER	TDR	TRENCH DRAIN
HTG	HEATING	TEMP	TEMPERATURE
HTR	HEATER	TYP	TYPICAL
HW	HOT WATER	UG	UNDERGROUND
HYD	HYDRANT	VAC	VACUUM
ID	INDIRECT	V	VENT
IN	INCH	VAV	VARIABLE AIR VOLUME
INV	INVERT	VENT	VENTILATION
LB	POUND	VTR	VENT THROUGH ROOF
LB/HR	POUNDS PER HOUR	W	WASTE
LAT	LEAVING AIR TEMPERATURE	WB	WET BULB
LP	LOW PRESSURE	WCO	WALL CLEAN OUT
LPG	LIQUEFIED PETROLEUM GAS	WH	WALL HYDRANT

Equipment Abbreviations

AC	AIR CONDITIONING UNIT	ET	EXPANSION TANK
ACCU	AIR COOLING CONDENSING UNIT	EWH	ELECTRIC WATER HEATER
AHU	AIR HANDLING UNIT	FCU	FAN COIL UNIT
AS	AIR SEPARATOR	FP	FIRE PUMP
B	BOILER	GI	GREASE INTERCEPTOR
CH	CHILLER	GRV	GRAVITY ROOF VENTILATOR
CT	COOLING TOWER	HWP	HEATING WATER PUMP
CUH	CABINET UNIT HEATER	HRU	HEAT RECOVERY UNIT
CHWP	CHILLED WATER PUMP	PRV	POWER ROOF VENTILATOR
DBP	DOMESTIC WATER BOOSTER PUMP	RE	RETURN/EXHAUST FAN
DC	DUCT MOUNTED COIL	RTU	ROOFTOP UNIT
DCP	DOMESTIC WATER CIRCULATING PUMP	SP	SUMP PUMP
EF	EXHAUST FAN	UH	UNIT HEATER
EDC	ELECTRIC DUCT COIL	WH	WATER HEATER

* NOTE *

ALL OF GENERAL NOTES ON THIS SHEET ARE TO BE APPLIED TO ALL OTHER DRAWINGS IN THIS SET.THE SYMBOLS AND ABBREVIATIONS SHOWN ON THIS SHEET MAY OR MAY NOT BE USED IN THIS SET OF DRAWINGS.

Project Requirements

A COORDINATE INSTALLATION OF PIPING, DUCTWORK, CONDUIT, LIGHTS, CABLE TRAY, STRUCTURE, AND EQUIPMENT TO PREVENT CONFLICTS.

B FINAL PRODUCT SHALL BE A COMPLETE AND FUNCTIONING SYSTEM, AND SHALL CONFORM TO ALL REQUIREMENTS OF APPLICABLE FEDERAL, STATE, AND LOCAL CODES, INCLUDING BUT NOT LIMITED TO THE INTERNATIONAL BUILDING CODE AND INTERNATIONAL MECHANICAL CODE.

C LOCATE EQUIPMENT REQUIRING ACCESS 2'-0" MAXIMUM ABOVE CEILING.

D PENETRATIONS OF RATED ASSEMBLIES SHALL BE FIRE STOPPED. FIRE STOPPING SHALL BE AN APPROVED MATERIAL AS PRESCRIBED IN CSFM STANDARD 43-1 AND SHALL BE U.L. LISTED.

E PROVIDE SLEEVES AND/OR OPENINGS TO RUN PIPES THROUGH FOUNDATIONS, FLOORS, WALLS, AND ROOF.

F MAINTAIN CLEAR ACCESS TO SERVICE EQUIPMENT AND OTHER ACCESSORIES REQUIRING SERVICE, VISUAL INSPECTION OR HAND OPERATION. WHERE INDICATED OR REQUIRED, PROVIDE ACCESS PANELS OF THE TYPE SELECTED TO SUIT MATERIALS IN WHICH INSTALLED.

G REFER TO HVAC SERIES DRAWINGS FOR GAS AND A.C. CONDENSATE DRAIN PIPING.

H PIPE SIZES SHOWN SHALL BE CONTINUED IN THE DIRECTION OF FLOW UNTIL ANOTHER SIZE IS SHOWN.

I FOR DETAILS, EQUIPMENT CONNECTIONS, AND PIPE SIZES NOT SHOWN ON THE SEGMENTS, REFER TO DETAILS, SCHEDULES, AND SPECIFICATIONS.

J INSTALL ALL EQUIPMENT IN ACCORDANCE WITH THE RESPECTIVE MANUFACTURER'S WRITTEN INSTALLATION INSTRUCTIONS, AT A LEVEL OF QUALITY AND WORKMANSHIP CONSISTENT WITH THE SPECIFICATIONS.

K LOCATIONS OF PIPING AND EQUIPMENT AS INDICATED ON THE DRAWING, ARE APPROXIMATE AND SUBJECT TO MINOR ADJUSTMENTS IN THE FIELD. WORK SHALL BE COORDINATED WITH ALL OTHER TRADES TO AVOID INTERFERENCE IN THE FIELD.

L INSTALL EXPOSED PIPING AS HIGH AS PRACTICAL IN ROOMS WITHOUT CEILINGS.

M THE CONTRACTOR'S WORK SCHEDULE SHALL BE SUBMITTED TO AND APPROVED BY THE OWNER.

N PRIOR TO STARTING WORK, SUBMIT SHOP DRAWINGS FOR ALL PLUMBING FIXTURES,

O CONTRACTOR SHALL OBTAIN AND PAY FOR ALL NECESSARY PERMITS AND SHALL ARRANGE FOR ALL INSPECTIONS AS REQUIRED.

P PROVIDE ONE YEAR WARRANTY FOR ALL WORKMANSHIP AND MATERIALS AFTER THE DATE OF FINAL ACCEPTANCE.

MECHANICAL GENERAL NOTES:

1. THE CONTRACTOR SHALL COORDINATE WORK WITH THAT OF THE OTHER TRADES PRIOR TO INSTALLATION OF ANY DUCTWORK AND EQUIPMENT.

2. THE CONTRACTOR SHALL MAKE A COMPLETE REVIEW OF THE MECHANICAL PLANS, SCHEDULES, AND DETAILS PRIOR TO INSTALLATION OF THE MECHANICAL SYSTEMS AND REVIEW ANY CONFLICTS THAT ARE NOTED WITH THE ENGINEER.

3. THE MECHANICAL CONTRACTOR SHALL ENSURE THAT ITEMS TO BE FURNISHED UNDER THE CONTRACT WILL FIT THE SPACE AVAILABLE. THE CONTRACTOR SHALL MAKE NECESSARY FIELD MEASUREMENTS TO ASCERTAIN SPACE REQUIREMENTS, INCLUDING THOSE FOR CONNECTIONS, AND SHALL FURNISH AND INSTALL SUCH SIZES AND SHAPES OF EQUIPMENT AS NECESSARY.

4. ALL EQUIPMENT SHALL BE LOCATED AND INSTALLED TO PROVIDE MAXIMUM SPACE FOR PROPER MAINTENANCE AND SERVICE.

5. ALL POWER WIRING AND ASSOCIATED CONDUIT SHALL BE PROVIDED TO HVAC EQUIPMENT BY THE ELECTRICAL CONTRACTOR. THE HVAC CONTRACTOR SHALL FURNISH ALL MOTOR STARTERS, DISCONNECT SWITCHES, AND COMBINATION STARTERS FOR HVAC EQUIPMENT AND TURN THEM OVER TO THE ELECTRICAL CONTRACTOR FOR INSTALLATION. ALL FINAL POWER WIRING CONNECTIONS TO HVAC EQUIPMENT SHALL BE MADE BY THE HVAC CONTRACTOR FROM SLACK WIRE LEFT BY THE ELECTRICAL CONTRACTOR. REFER TO STANDARD ELECTRICAL CONNECTION DETAIL FOR DIVISION RESPONSIBILITY REGARDING ELECTRICAL REQUIREMENTS. MECHANICAL CONTRACTOR SHALL PROVIDE ALL CONTROL WIRING, IN CONDUIT, REQUIRED TO SATISFACTORILY CONTROL ALL EQUIPMENT INCLUDED IN THIS SECTION. FURNISH AND WIRE ALL CONTROL DEVICES SUCH AS THERMOSTATS, SWITCHES, RELAYS AND ANY OTHER DEVICES NECESSARY TO CONTROL THE EQUIPMENT FURNISHED IN THIS SECTION UNLESS NOTED OTHERWISE.

6. THE MECHANICAL CONTRACTOR SHALL PROVIDE AND INSTALL HIS OWN SUPPORT DEVICES. ALL LOCATIONS SHALL BE COORDINATED WITH THE GENERAL CONTRACTOR AND OTHER PRIME CONTRACTORS PRIOR TO INSTALLATION.

7. THE MECHANICAL CONTRACTOR SHALL REFER TO THE ARCHITECTURAL PLANS FOR FLOOR PLAN DIMENSIONS. DO NOT SCALE THESE DRAWINGS.

8. THE MECHANICAL CONTRACTOR SHALL BE RESPONSIBLE FOR ALL PENETRATIONS (PERTAINING TO HVAC WORK) THROUGH THE ROOF. THE MECHANICAL CONTRACTOR SHALL COORDINATE WITH THE ROOFING CONTRACTOR FOR WATER PROOFING AROUND THESE OPENINGS. ROOF CURBS FOR HVAC EQUIPMENT SHALL BE FURNISHED BY THE MECHANICAL CONTRACTOR AND INSTALLED BY THE ROOFING CONTRACTOR.

9. THE MECHANICAL CONTRACTOR SHALL COORDINATE SIZE AND LOCATION OF ALL PENETRATIONS THROUGH THE ROOF WITH THE GENERAL CONTRACTOR AND ROOFING SUB-CONTRACTOR.

10. ALL FIRE WALL DUCT PENETRATIONS SHALL BE FIRE SEALED IN ACCORDANCE WITH THE LATEST UL STANDARDS.

11. PROVIDE SHEET METAL COLLARS AT ALL LOCATIONS WHERE CUTS PENETRATE WALLS. COLLARS SHALL BE 14 GAUGE MINIMUM OR EQUIVALENT TO THE DUCTWORK IF DUCTWORK IS OF A HEAVIER GAUGE METAL.

12. INSTALL BALANCING DAMPERS IN ALL DUCTS SO AS THE LOCATION IS VISIBLE FROM THE FLOOR.

13. ALL ELBOWS IN DUCTWORK SHALL BE RADIUS ELBOWS, UNLESS OTHERWISE NOTED.

14. INSTALL TEMPERATURE SENSORS AND THERMOSTATS 48" ABOVE FINISHED FLOOR. COORDINATE WITH INSTALLATION OF LIGHT SWITCHES.

15. ALL DUCTWORK, PIPING, AND EQUIPMENT LAYOUTS AND LOCATIONS SHOWN ARE DIAGRAMMATIC. THE CONTRACTOR SHALL BECOME FAMILIAR WITH THE PROJECT AND COORDINATE THE DUCT LAYOUT WITH ALL CONTRACTORS PRIOR TO INSTALLATION. THIS CONTRACTOR SHALL PROVIDE, AT NO ADDITIONAL COST TO THE OWNER, ALL DUCT OFFSETS REQUIRED FOR THE SYSTEMS TO FIT THE SPACE PROVIDED WHETHER OR NOT THOSE OFFSETS ARE INDICATED ON THE PLANS.

16. ALL DUCTWORK AND EQUIPMENT SHALL BE SUPPORTED FROM THE BUILDING SUPPORT STRUCTURE AND NOT STRUCTURAL BRIDGING OR THE ROOF DECK. THE MECHANICAL CONTRACTOR SHALL COORDINATE THE ROUGH-IN OF DUCTWORK WITH THE GENERAL CONTRACTOR. ALL DUCT PENETRATIONS SHALL BE PROVIDED BY THE MECHANICAL CONTRACTOR.

17. ALL HYDRONIC PIPING SHALL BE PERMANENTLY IDENTIFIED BY THEIR CONTENT, FUNCTION, AND DIRECTION OF FLOW. ALL IDENTIFICATION MARKERS SHALL BE PERMANENTLY STENCILED ON THE PIPING IN A LEGIBLE MANNER AT NO GREATER DISTANCE THAN 10'-0" ON CENTER. ALL PIPING IN THE MECHANICAL ROOMS AND FINISHED AREAS ARE TO BE PAINTED AS FOLLOWS: CHILLED WATER- BLUE, HOT HEATING WATER- RED, DHW MAKEUP- GREEN.

18. A MANUAL AIR VENT SHALL BE INSTALLED AT EVERY HIGH POINT OF THE ENTIRE HYDRONIC PIPING SYSTEM.

19. DO NOT INSTALL HYDRONIC PIPING OR DUCTWORK OVER AND ELECTRICAL SWITCHGEAR OR PANEL BOARDS.

20. THE MECHANICAL CONTRACTOR SHALL PROVIDE ALL ACCESS DOORS AS REQUIRED FOR CODE COMPLIANCE AND TO ACCESS ANY INSTALLATION OF HIS WORK THAT WILL REQUIRE FUTURE MAINTENANCE. THESE DOORS SHALL BE 20"X20". THE DRYWALL CONTRACTOR WILL PROVIDE THE REQUIRED FRAMED OPENINGS AND INSTALL THE ACCESS DOORS. DOORS SHALL MATCH CEILING RATINGS.

21. FLEXIBLE PIPE CONNECTIONS SHALL BE PROVIDED AT ALL HYDRONIC PIPING CONNECTIONS AT CHILLERS.

22. ALL BELT DRIVEN EQUIPMENT SHALL BE PROVIDED WITH A NEW BELT AT FINAL COMPLETION AND A NEW SPARE BELT SHALL BE TURNED OVER TO MAINTENANCE STAFF.

23. PIPING SHALL BE COLOR CODED AS FOLLOWS WITH FLOW ARROWS AND LABELS AT 10 FOOT INTERVALS AND AT ALL TURNS AND EACH FLOOR AND WALL PENETRATIONS: SEE SPECIFICATIONS FOR COLORS.

24. ALL DETAILS CONTAINED IN SECTION 600 ARE APPLICABLE TO THE INSTALLATION OF THE MECHANICAL SYSTEMS ON THIS PROJECT.

EAST PARCEL MECHANICAL SHEET INDEX

ES-M001	COVER SHEET
ES-M101	DUCTWORK PLANS
ES-M601	DETAILS & SCHEDULES

ENERGY CODE CODE COMPLIANCE STATEMENT EASTERN SHELTER

MECHANICAL SYSTEM, SERVICE SYSTEM, AND EQUIPMENT METHOD OF COMPLIANCE

PRESCRIPTIVE ☒ ENERGY COST BUDGET ☐

THERMAL ZONE: 4A

EXTERIOR DESIGN CONDITIONS:

WINTER DRY BULB: 19.7°F
SUMMER DRY BULB: 95.0°F

INTERIOR DESIGN CONDITIONS:

WINTER DRY BULB: 40°F
SUMMER DRY BULB: N/A
RELATIVE HUMIDITY: N/A

BUILDING HEATING LOAD: 7.46 MBH

BUILDING COOLING LOAD: N/A

MECHANICAL SPACING CONDITIONS SYSTEM:
UNITARY - FREEZE PROTECTION HEATING ONLY PROVIDED BY ELECTRIC CABINET WALL HEATERS AND ELECTRIC UNIT HEATER.
BOILER - N/A
CHILLER - N/A

EQUIPMENT EFFICIENCIES:
SEE SCHEDULES

EQUIPMENT SCHEDULES WITH MOTORS:
SEE SCHEDULES

DESIGNER STATEMENT:
TO THE BEST OF MY KNOWLEDGE AND BELIEF, THE DESIGN OF THIS BUILDING COMPLIES WITH THE MECHANICAL SYSTEMS AND EQUIPMENT REQUIREMENTS OF THE CURRENT INTERNATIONAL MECHANICAL CODE
SCOTT L. ENNIS, P.E.

AN ONSITE SYSTEM INSTALLATION REVIEW SHALL BE CONDUCTED BY A DESIGN PROFESSIONAL PRIOR TO FINAL INSPECTION AND ISSUANCE OF CERTIFICATION OR OCCUPANCY. THE MECHANICAL CONTRACTOR SHALL MAKE APPROPRIATE PERSONNEL AVAILABLE DURING DESIGN PROFESSIONAL'S ONSITE INSPECTION TO ASSIST WITH REVIEW AND ADDITIONAL EQUIPMENT AND CONTROLS TESTING. CONTRACTOR SHALL SCHEDULE ONSITE INSPECTION WITH DESIGN PROFESSIONAL. A MINIMUM ONE WEEK PRIOR TO VISIT. AT THE TIME OF THE VISIT THE MECHANICAL CONTRACTOR SHALL PROVIDE THE FOLLOWING FOR REVIEW BY THE LOCAL AHJ AND DESIGN PROFESSIONAL:

- A COMPLETED TEST AND BALANCE REPORT
- A COPY OF ALL OPERATION AND MAINTENANCE MANUALS
- DOCUMENTATION THAT EQUIPMENT INSTALLER HAS FOLLOWED THE MANUFACTURER'S RECOMMENDATIONS FOR STARTUP AND TESTING OF ALL EQUIPMENT.

Susan Hatchell
Landscape Architecture, PLLC
711 W. North Street, Raleigh, NC 27603
p: 919-838-9600 f: 919-838-9700

Wooten
120 North Boylan Avenue • Raleigh, NC 27603-1423
(919) 828-0531 • thewootencompany.com
License Number : F-0115

COVER SHEET

NORTH CAROLINA PROFESSIONAL ENGINEER 027928 SCOTT L. ENNIS
DocuSigned by: 1E0B95366ACF412...
7/24/2026

LAKE MYRA COUNTY PARK
Wake County, NC

REVISIONS

Date: 07/27/26

ES-M001

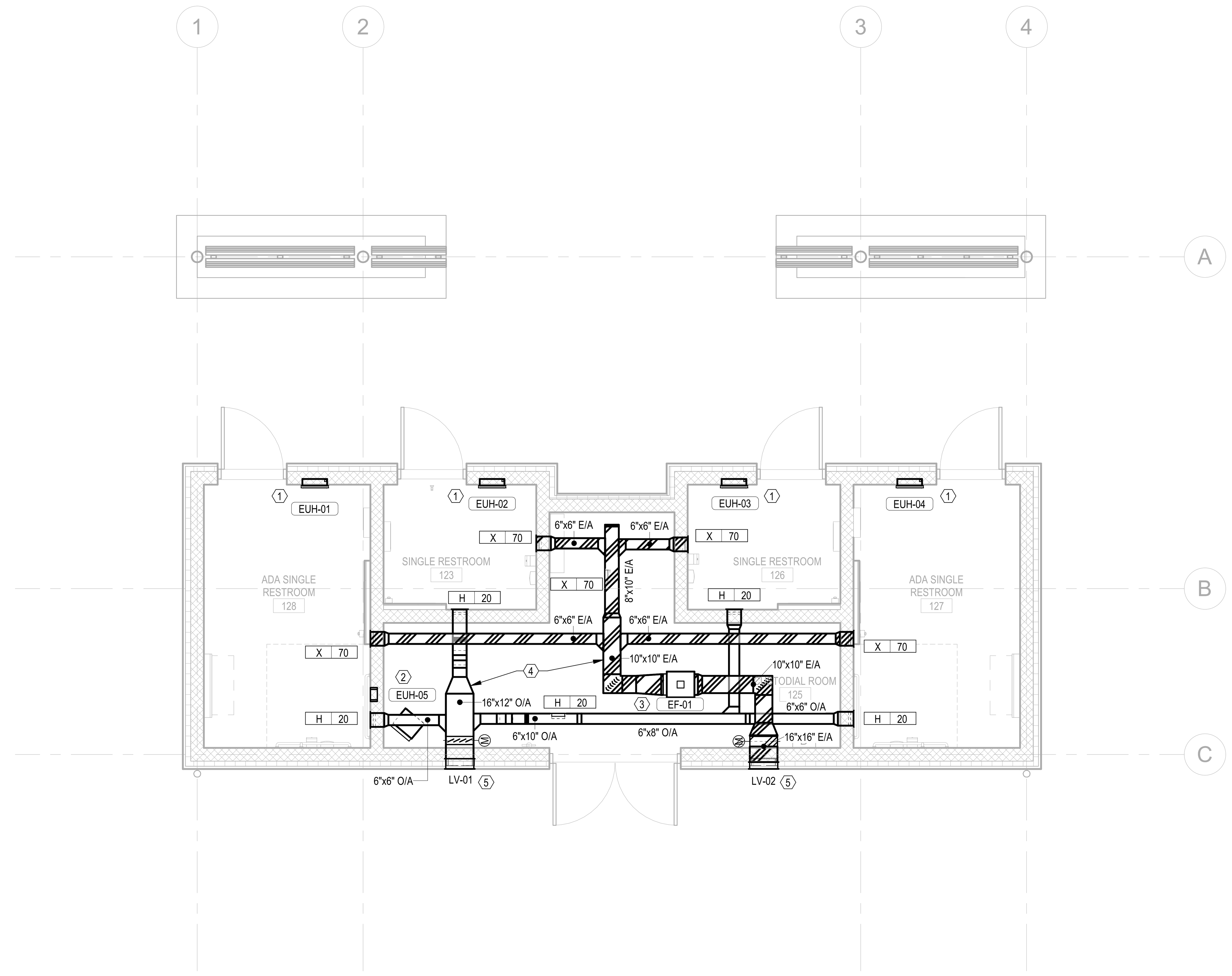

1 ES-M101 HVAC PLAN
1/4" = 1'-0"

KEY NOTES

1. INSTALL WALL HEATER PER MANUFACTURER'S INSTALLATION INSTRUCTIONS AND CLEARANCES. INSTALL AT 10" A.F.F. AS MEASURED TO BOTTOM OF UNIT.
2. INSTALL UNIT HEATER PER MANUFACTURER'S INSTALLATION INSTRUCTIONS AND CLEARANCES.
3. INSTALL EXHAUST FAN PER MANUFACTURER'S INSTALLATION INSTRUCTIONS AND CLEARANCES.
4. ROUTE EXHAUST AND OUTSIDE AIR DUCTWORK HIGH THROUGH CUSTODIAL ROOM SPACE. ENSURE MINIMUM 6'-8" CLEAR BELOW ALL DUCTWORK.
5. LOUVER TO BE MOUNTED AT 8'-6" A.F.F. AS MEASURED TO BOTTOM OF LOUVER. MAINTAIN 10' BETWEEN EXHAUST DISCHARGE AND OUTSIDE AIR INTAKE.

Susan Hatchell Landscape Architecture, PLLC
711 W. North Street, Raleigh, NC 27603
p: 919-838-9600 f: 919-838-9700

Wooten
120 North Boylan Avenue • Raleigh, NC 27603-1423
(919) 828-0531 • thewootencompany.com
License Number: F-0115

DUCTWORK PLANS

NORTH CAROLINA PROFESSIONAL ENGINEER 027928 SCOTT L. ENNIS
7/24/2026

LAKE MYRA COUNTY PARK
Wake County, NC

REVISIONS

Date: 07/27/26

ES-M101

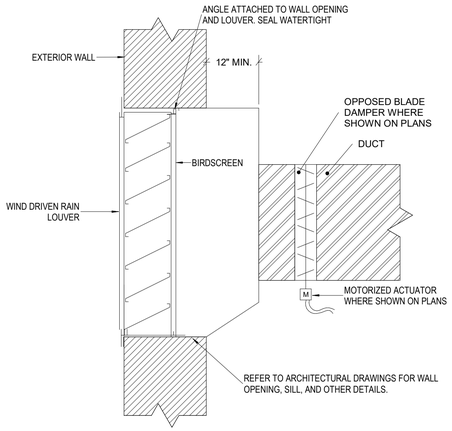

5 ES-M601 DETAIL - OUTSIDE AIR/EXHAUST LOUVER
1/8" = 1'-0"

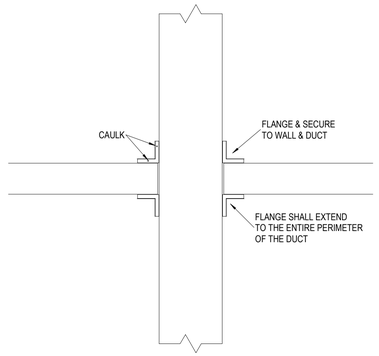

(PLAN VIEW)

4 ES-M601 DETAIL - NON-RATED DUCT PENETRATION
NOT TO SCALE

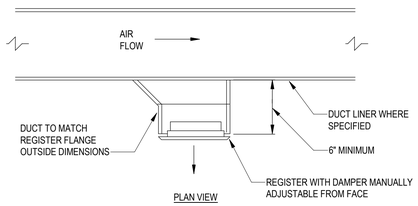

3 ES-M601 TYPICAL DUCT MOUNTED REGISTER (RECTANGULAR DUCT)
NOT TO SCALE

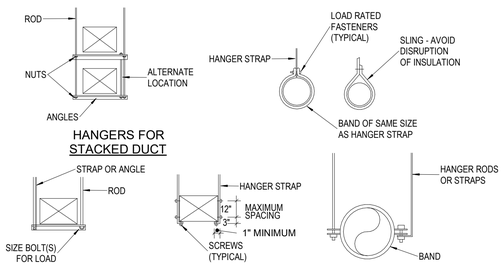

NOTES:

1. REINFORCEMENT MAY BE USED FOR ATTACHMENT IF IT QUALIFIES FOR BOTH DUTIES.
2. DO NOT EXCEED LOAD RATINGS FOR METHOD USED. FROM SMACNA DUCT STANDARDS

2 ES-M601 DETAIL - TYPICAL DUCT HANGERS
NOT TO SCALE

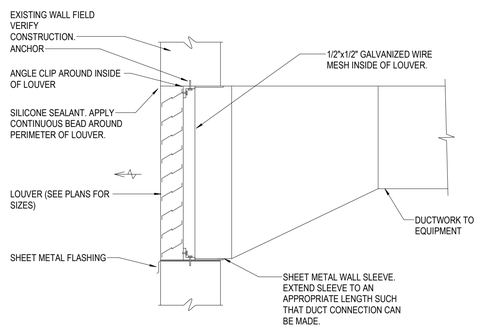

1 ES-M601 LOUVER ASSEMBLY DETAIL
NOT TO SCALE

Eastern Parcel Louver Schedule

Tag	Manf.	Model	Purpose	CFM	Size	Max APD	Minimum Free Area (Sq.ft.)	Max FPM	Remarks
LV-01	GREENHECK	EHH-601	INTAKE	100	16X12	0.1	0.16	600	1
LV-02	GREENHECK	ESD-435	EXHAUST	200	14X14	0.1	0.4	750	1

GENERAL NOTES:

A. PROVIDE FRAMED 1/2" x 1/2" ALUMINUM BIRD SCREEN FOR ALL LOUVERS
B. ALL LOUVERS SHALL BE RATED FOR THE PROJECT WIND ZONE. REFER TO STRUCTRAL DRAWINGS.
C. LOUVERS SHALL HAVE 3-COAT 70% PVDF FINISH (AAMA 2605) WITH A DRY FILM THICKNESS OF 2.0 mil MINIMUM. PROVIDE STANDARD AND CUSTOM COLOR CHARTS WITH SUBMITTAL. COLOR SHALL BE SELECTED BY ARCHITECT FROM THE FULL RANGE.
D. ALL LOUVERS SHALL BE AMCA 500-L CERTIFIED FOR AIR PERFORMANCE, WATER PENETRATION,, AND WIND DRIVEN RAIN AND BEAR APPROPRIATE SEAL. ALL LOUVERS SHALL BE RATED AS RAIN PENETRATION CLASS A FOR THE FACE VELOCITY AT THE CFM SCHEDULED.
E. EQUIVALENTS BY RUSKIN, ARROW, AIROLITE, NAILOR, RELIABLE, POTTORFF, OR AS LISTED IN THE SPECIFICATIONS

REMARKS:

1. PROVIDE MOTORIZED DAMPER TO OPEN WHEN ASSOCIATED FAN RUNS

Eastern Parcel Shelter Fan Schedule

Identity	Manufacturer	Model	Fan Design		Fan Arrangement	Fan Drive Type	Weight	Electrical		Remarks
			Capacity	ESP				Voltage	Phase	
EF-01	Greenheck	SQ 90-95	350 CFM	0.25 in-wg	Inline	Direct	34 lb	115 V	1	1

GENERAL NOTES:

A. PROVIDE ALL DUCT TRANSITIONS FOR FANS.
B. THE UNIT HOUSING SHALL BE CONSTRUCTED OF ALUMINUM.
C. ALL FANS TO BE U.L. LISTED.
D. PROVIDE WITH INTEGRAL DISCONNECT.
E. EXTERNALLY OR INTERNALLY MOUNTED DISCONNECT SWITCH FURNISHED BY DIVISION 23 AND INSTALLED BY DIVISION 26.
F. EXTERNALLY MOUNTED STARTER FURNISHED BY DIVISION 23 INSTALLED BY DIVISION 26.
G. PROVIDE OVERLOAD PROTECTION FOR ALL FANS. COORDINATE WITH DIVISION 26.
H. PROVIDE SPEED CONTROLLERS FOR ALL DIRECT DRIVE FANS.
I. ESP DOES NOT INCLUDE FACTORY BACKDRAFT DAMPER. THIS PRESSURE DROP SHALL BE ADDED BY THE MANUFACTURER TO THE ESP LISTED WHEN SELECTING FANS.

REMARKS:

1. PROVIDE HANGING VIBRATION ISOLATION KIT WITH NEOPRENE ISOLATORS.
2. FAN SHALL BE PROVIDED TIME CLOCK TO OPERATE DURING PARK OPEN HOURS.

Eastern Parcel Shelter Electric Unit Heater Schedule

Identity	Manufacturer	Model	Bottom Elevation	CFM Capacity	Size	Electric Heat	Electrical		Product Weight	Notes
					Size	Element(s)	Voltage	Phase		
EUH-01	Berko	FRC	1'-0"	100 CFM	1.00 kW	1	120 V	1	25 lb	1, 2, 3
EUH-02	Berko	FRC	1'-0"	100 CFM	1.00 kW	1	120 V	1	25 lb	1, 2, 3
EUH-03	Berko	FRC	1'-0"	100 CFM	1.00 kW	1	120 V	1	25 lb	1, 2, 3
EUH-04	Berko	FRC	1'-0"	100 CFM	1.00 kW	1	120 V	1	25 lb	1, 2, 3
EUH-05	Markel	F1FUH03003	7'-0"	400 CFM	3.30 kW	1	208 V	1	36 lb	1, 2, 3, 5

GENERAL NOTES:

A. UNITS BASED ON MARKEL 5100 AND 3420 SERIES.
B. EQUIVALENTS: REZNOR, BERKO, INDEECO OR AS LISTED IN SPECIFICATIONS.
C. WHERE A REMOTE WALL MOUNTED THERMOSTAT IS INDICATED, PROVIDE 24V THERMOSTAT AND CONTROLS TRANSFORMER.
D. MOUNTING HEIGHTS ARE TO BOTTOM OF UNIT.

REMARKS:

1. PROVIDE SEMI-RECESSED SLEEVE.
2. PROVIDE FACTORY CIRCUIT BREAKER.
3. PROVIDE BUILT-IN TAMPERPROOF THERMOSTAT.
4. PROVIDE WALL-MOUNTED 24V THERMOSTAT.
5. PROVIDE HANGING BRACKET.
6. PROVIDE FACTORY MOUNTED DISCONNECT SWITCH.
7. BAS CONTRACTOR TO PROVIDE T-STAT.

Eastern Parcel Shelters Grilles, Registers & Diffusers Schedule

ID Type	Description	Manf.	Type	Model	Border Application	Design Airflow Rate	Size	Remarks
H	Supply Grille	PRICE	Sidewall	620	Surface Mount	20 CFM	8"x8"	1, 2, 3
X	Exhaust	PRICE	Sidewall	530	Surface Mount	70 CFM	8"x8"	1, 5, 6

GENERAL NOTES:

A. BASIS OF DESIGN IS PRICE. EQUIVALENTS BY TITUS, KRUEGER, TUTTLE AND BAILEY, NAILOR, OR AS LISTED IN SPECIFICATIONS
B. PROVIDE VOLUME DAMPERS AT TAKE-OFF FOR EACH GRILLE
C. ALL AIR DISTRIBUTION DEVICES SHALL BE ALUMINUM
D. FOR SIDE WALL GRILLES, PROVIDE REMOTE CABLE OPERATED, GEAR DRIVEN BALANCING DAMPER OPERABLE FROM FACE OF DIFFUSER

REMARKS:

1. COLOR SHALL BE SELECTED BY THE ARCHITECT AT THE TIME OF SUBMITTAL REVIEW.
2. PROVIDE OPPOSED BLADE ALUMINUM DAMPER.
3. WHERE MOUNTED ON A WALL OR OTHER FINISHED ARCHITECTURAL SURFACE, PROVIDE CONCEALED MOUNTING BRACKET OPTION IN LIEU OF COUNTERSUNK SCREW TYPE.

Susan Hatchell
Landscape Architecture, PLLC
711 W. North Street, Raleigh, NC 27603
p: 919-838-9600 f: 919-838-9700

Wooten
129 North Boylan Avenue • Raleigh, NC 27603-1423
(919) 828-0531 • thewootencompany.com
License Number : F-0115

DETAILS & SCHEDULES

NORTH CAROLINA PROFESSIONAL ENGINEER SEAL 027928 SCOTT L. ENNIS
Docusigned by:
7/24/2026

LAKE MYRA COUNTY PARK
Wake County, NC

REVISIONS

Date: 07/27/26

ES-M601

Electrical Abbreviations

1P	1 Pole (2P, 3P, 4P, ETC.)
A, Amp	Ampere
AC	Above Counter
ACLG	Above Ceiling
ADO	Automatic Door Opener
AF	Amp Frame
AFF	Above Finished Floor
AFG	Above Finished Grade
AFI	Arc Fault Circuit Interrupter
AHU	Air Handling Unit
AL	Aluminum
ALT	Alternate
AMP	Ampere
AMPL	Amplifier
ANNUN	Annunciator
APPROX	Approximately
AQ-STAT	Aquastat
ARCH	Architect, Architectural
AS	Amp Switch
AT	Amp Trip
ATS	Automatic Transfer Switch
AUTO	Automatic
AUX	Auxiliary
AV	Audio Visual
AWG	American Wire Gauge
BATT	Battery
BD	Board
BLDG	Building
BMS	Building Management System
C	Conduit
CAB	Cabinet
CAT	Catalog
CATV	Cable Television
CB	Circuit Breaker
CCTV	Closed Circuit Television
CKT	Circuit
CLG	Ceiling
COMB	Combination
CMPR	Compressor
CONN	Connection
CONST	Construction
CONT	Continuation Or Continuous
CONTR	Contractor
CONV	Convector
CP	Circulating Pump
CRT	Cathode-Ray Tube
CT	Current Transformer
CTR	Center
CU	Copper
DCP	Domestic Water Circulating Pump
DEPT	Department
DET	Detail
DIA	Diameter
DISC	Disconnect
DIST	Distribution
DN	Down
DPR	Damper
DS	Safety Disconnect Switch
DT	Double Throw
DWG	Drawing
EC	Electrical Contractor
ELEC	Electric, Electrical
ELEV	Elevator
ELU	Emergency Lighting Unit
EM	Emergency
EMS	Energy Management System
EMT	Electrical Metallic Tubing
EP	Electric Pneumatic
EQUIP	Equipment
EWC	Electric Water Cooler
EXIST	Existing
EXH	Exhaust
EXP	Explosion Proof
FA	Fire Alarm
FABP	Fire Alarm Booster Power Supply Panel
FACP	Fire Alarm Control Panel
FCU	Fan Coil Unit
FIXT	Fixture
FLR	Floor
FLUOR	Fluorescent
FU	Fuse
FUDS	Fused Safety Disconnect Switch
GA	Gauge
GAL	Gallon
GALV	Galvanized
GC	General Contractor
GEN	Generator
GFI	Ground Fault Circuit Interrupter
GFP	Ground Fault Protector
GND	Ground
GRS	Galvanized Rigid Steel (Conduit)
GYP BD	Gypsum Board
HOA	Hands-Off-Automatic Switch
HORIZ	Horizontal
HP	Horsepower
HPF	High Power Factor
HT	Height
HTG	Heating
HTR	Heater
HV	High Voltage
HVAC	Heating, Ventilating And Air Conditioning
IC	Interrupting Capacity
IG	Isolated Ground
IMC	Intermediate Metal Conduit
INCAND	Incandescent
IR	Infrared
I/W	Interlock With
J-BOX	Junction Box
KV	Kilovolt
KVA	Kilovolt-Ampere
KVAR	Kilovolt-Ampere Reactive
KW	Kilowatt
KWH	Kilowatt Hour
LOC	Locate Or Location
LT	Light
LTG	Lighting
LTNG	Lightning
LV	Low Voltage
MAX	Maximum
MAG.S	Magnetic Starter
M/C	Momentary Contact
MC	Mechanical Contractor
MCB	Main Circuit Breaker
MCC	Motor Control Center
MDC	Main Distribution Center
MDP	Main Distribution Panel
MFR	Manufacturer
MFS	Main Fused Disconnect Switch
MH	Manhole
MIC	Microphone
MIN	Minimum
MISC	Miscellaneous
MLO	Main Lugs Only
MMS	Manual Motor Starter
MOA	Multioutlet Assembly
MSP	Motor Starter Panelboard
MSBD	Main Switchboard
MSS	Motor Starter Switch
MT	Mount
MT.C	Empty Conduit
MTS	Manual Transfer Switch
MTR	Motor, Motorized
N.C.	Normally Closed
NEC	National Electrical Code
NEMA	National Electrical Manufacturer's Association
NFDS	Non-Fused Safety Disconnect Switch
NIC	Not In Contract
NL	Night Light
N.O.	Normally Open
NPF	Normal Power Factor
NTS	Not To Scale
OC	On Center
OH	Overhead
OL	Overloads
PA	Public Address
PB	Pull Box Or Pushbutton
PE	Pneumatic Electric
PED	Pedestal
PF	Power Factor
PH	Phase
PIV	Post Indicating Valve
PNL	Panel
PP	Power Pole
PR	Pair
PRI	Primary
PROJ	Projection
PRV	Power Roof Ventilator
PT	Potential Transformer
PVC	Polyvinyl Chloride (Conduit)
PWR	Power
QUAN	Quantity
RCPT	Receptacle
REQD	Required
RM	Room
RSC	Rigid Steel Conduit
RTU	Roof Top Unit
SC	Surface Conduit
SEC	Secondary
SHT	Sheet
SIM	Similar
SLD	Single-Line Diagram
S/N	Solid Neutral
SPEC	Specification
SPKR	Speaker
SP	Spare
SPP	Single-Point Power
SR	Surface Raceway
SS	Stainless Steel
SSW	Selector Switch
S/S	Stop/Start Pushbuttons
STA	Station
STD	Standard
SURF	Surface Mounted
SW	Switch
SWBD	Switchboard
SYM	Symmetrical
SYS	System
TEL	Telephone
TERM	Terminal
TL	Twist Lock
TR	Tamper Resistant
T-STAT	Thermostat
TTC	Telephone Terminal Cabinet
TV	Television
TVTC	Television Terminal Cabinet
TYP	Typical
UC	Under Counter
UE	Underground Electrical
UG	Underground
UH	Unit Heater
UT	Underground Telephone
UTIL	Utility
UV	Ultraviolet
V	Volt
VA	Volt-Amperes
VDT	Video Display Terminal
VERT	Vertical
VFD	Variable Frequency Drive
VOL	Volume
W	Watt
W/	With
WG	Wire Guard
WH	Water Heater
W/O	Without
WP	Weatherproof
XFMR	Transformer
XFR	Transfer
∠	Angle
@	At
▲	Delta
'	Feet
"	Inches
#	Number
Ø	Phase
C	Center Line
P	Plate

ELECTRICAL SYMBOL LEGEND

- A — TYPICAL FIXTURE DESIGNATIONS. *"A" INDICATES FIXTURE TYPE, SEE LIGHT FIXTURE SCHEDULE FOR DESCRIPTION.
- E — "E" INDICATES EMERGENCY BATTERY W/ LIGHT FIXTURE
- LIGHT FIXTURES, WITH FIXTURE DESIGNATION
- WALL MOUNTED EXIT SIGN. SHADED AREAS INDICATE NUMBER OF FACES, DIRECTION ARROWS AS INDICATED.
- CEILING MOUNTED EXIT SIGN. SHADED AREAS INDICATE NUMBER OF FACES, DIRECTION ARROWS AS INDICATED.
- WALL MOUNTED EMERGENCY BATTERY UNIT.
- $ — TOGGLE SWITCH, MOUNT CENTER AT 46"AFF.
- $3 — THREE-WAY SWITCH, MOUNT CENTER AT 46"AFF.
- $D — DIMMING SWITCH 0-10V, MOUNT CENTER AT 46"AFF.
- $OC — OCCUPANCY SENSOR WALL SWITCH, MOUNT CENTER AT 46"AFF.
- OS — CEILING MOUNTED OCCUPANCY SENSOR
- SBPG-6 — HOME RUN TO PANEL WITH PANEL DESIGNATION (SBPG) & CIRCUIT NUMBER (6). 3/4"C UNLESS NOTED OTHERWISE, SEE RISER DIAGRAM & PANELBOARD SCHEDULES FOR WIRE & CONDUIT SIZES.
- WIRING IN CONDUIT CONCEALED IN WALLS AND ABOVE CEILING.
- WIRING IN CONDUIT UNDERFLOOR OR UNDERGROUND.
- 10'-0" DRIVEN GROUND ROD
- DUPLEX RECEPTACLE, MOUNT CENTER AT 18" AFF UNLESS NOTED OTHERWISE
- SINGLE RECEPTACLE, RATING SHALL MATCH BREAKER SIZE
- PANELBOARD, SEE SCHEDULES & DETAILS.
- DISCONNECT SWITCH
- JUNCTION BOX
- CONCEALED SERVICE FLOOR BOX WITH DUPLEX RECEPTACLE
- CONCEALED SERVICE FLOOR BOX WITH DUPLEX RJ45
- 15cd — DATA/DATA JACK, DATA JACK, CENTER AT 18" AFF.

Electrical General Notes

A Conductors operating at 50 volts or greater shall be in raceway. Raceway within the structure above the floor slab shall be metal. Raceway below the floor slab and underground raceway outside the structure shall be PVC.

B Low voltage cables or conductors operating at less than 50 volts shall be in metal raceway where installed within walls or inaccessible spaces. Low voltage cables may be run in cable tray where noted. Low voltage cables may be run in cable support hooks above accessible ceilings where noted. Low voltage cable shall be plenum rated in plenum spaces.

B Low voltage cables or conductors operating at less than 50 volts shall be in metal raceway. Low voltage cables may be run in cable tray where noted. Low voltage cable shall be plenum rated in plenum spaces.

C Coordinate locations of devices with architectural elevations and details. Architectural elevations and details take precedence over locations shown on electrical drawings.

D Provide cable or conduit and wire as required to achieve circuiting shown. Size conductors per NEC ampacity and wire fill criteria. Provide dedicated neutral and ground conductors for circuiting, unless noted otherwise. Increase branch circuit and/or feeder conductors including equipment grounding conductors proportionally for no more than 3% voltage drop on branch circuits and 2% on feeders per energy code.

E It is the responsibility of this contractor to coordinate installation of electrical systems and those requiring electrical connections to maintain NEC required clearances, included but not limited to areas above accessible ceilings.

F Coordinate with other trades for proper installation of equipment. Consult the drawings of other trades or crafts to avoid conflicts with equipment, etc. Conflicts shall be resolved prior to rough-in and at no additional cost to the owner.

G Leave the site clean and ready for occupancy. Remove dirt, debris, empty cartons, tools, conduit and wire scraps, and miscellaneous spare equipment and materials used in this division of the work during construction. Components shall be free of dust, grit, and foreign materials and left as new before final acceptance of work.

H The symbols and abbreviations shown on this sheet may or may not be used in this set of drawings.

I Perform work to comply with the standard practices for good workmanship published by National Electrical Contractors Association (NECA). Comply with the latest enforced edition of the National Electrical Code (NEC), local codes, amendments, and ordinances.

J Field coordinate final mechanical and equipment locations along with connection requirements and control wiring prior to rough-in. Adjust corresponding circuit breaker ratings and branch circuiting accordingly.

K Electrical work shall be performed under the supervision of a licensed master electrician. Procure permits and licenses and pay fees associated with this work.

L Materials furnished for this project shall be new, commercial grade, free of defects, and listed by a nationally recognized testing laboratory unless noted otherwise.

M Provide complete operation & maintenance manual including approved submittal drawings, warranty information for product supplied, and manufactures operation and maintenance instructions.

N The contractor is responsible for making final wiring terminations to pre-installed receptacles in office furniture. Contractor is responsible for wiring and installing voice/data devices in office furniture. Coordinate placement of devices with furniture lay-out.

O Security system to be provided under separate contract. It is the responsibility of this contractor to provide conduit provisions, back boxes, rough-ins, sleeves and power to head end equipment for exact requirements prior to start of work.

P Conduit and wire shall not be installed below floor slab unless indicated on plan by dashed conduit.

Q Contractor shall be responsible for wiring electrical items shown on drawings except for items listed in note 'R' below.

R TV outlets, volume controls, nurse call dome lights, nurse call devices, telephone outlets, data outlets, and fire alarm devices shall consist of a back box with conduit stubbed above the accessible ceiling, see stub up detail. Verify size of back box required with device to be installed. Locate back boxes 6" from adjacent power receptacle intended for computer use.

S Furnish and install conduit from back boxes for the following devices into the accessible ceiling space in the corridor, unless noted otherwise:
1/2"C TV outlets
1/2"C Volume controls
1/2"C Door security devices (card readers, door strikes etc..)
1/2"C Nurse call dome lights
3/4"C Nurse call devices
3/4"C Telephone outlets
3/4"C Information outlets
3/4"C Fire alarm devices

EAST PARCEL ELECTRICAL SHEET INDEX

ES-E001	COVER SHEET
ES-E101	POWER AND LIGHTING PLANS
ES-E301	RISERS
ES-E401	DETAILS

EAST SHELTER

ELECTRICAL SYSTEM AND EQUIPMENT

METHOD OF COMPLIANCE:

ENERGY CODE: PRESCRIPTIVE__X__ PERFORMANCE_____

ASHRAE 90.1: PRESCRIPTIVE_____ PERFORMANCE_____

LIGHTING SCHEDULE

Lamp type required in fixture - See Fixture Schedule.
Number of lamps in fixture - See Fixture Schedule.
Ballast type used in the fixture - See Specifications.
Number of ballasts in fixture - See Specifications.
Total wattage per fixture - Varies - See Fixture Schedule

Total interior wattage specified versus allowed: 309 watts versus 437 watts (whole building)
Total exterior wattage specified versus allowed: 314 watts versus 1747 watts

ADDITIONAL PRESCRIPTIVE COMPLIANCE

___ 406.2 More Efficient HVAC Performance
_X_ 406.3 Reduced Lighting Power Density
___ 406.4 Enhanced Lighting Controls
___ 406.5 On-Site Supply of Renewable Energy
___ 406.6 Provision of Dedicated Outdoor HVAC Air System
___ 406.7 High Efficiency Service Water Heating

DESIGNER STATEMENT:
To the best of my knowledge and belief, the design of this building complies with the electrical system and equipment requirements of the 2018 North Carolina State Building Code, Energy Conservation Code.

LIGHT FIXTURE SCHEDULE

MARK	FIXTURE DESCRIPTION	MOUNTING	TYPE	LUMENS	TOTAL WATTS	VOLTS	MODEL # (OR EQUAL)	NOTE NO.
A4P	4' X 2.5" RECTANGULAR LINEAR PENDANT FIXTURE	PENDANT	LED	2000	15	120	FOCAL POINT # FSM2LS-BW-500LF-935K-120LD1-C48-WH-4	1,7
A6P	6' X 2.5" RECTANGULAR LINEAR PENDANT FIXTURE	PENDANT	LED	3000	23	120	FOCAL POINT # FSM2LS-BW-500LF-935K-120LD1-C48-WH-6	1,7
A8P	8' X 2.5" RECTANGULAR LINEAR PENDANT FIXTURE	PENDANT	LED	4000	29	120	FOCAL POINT # FSM2LS-BW-500LF-935K-120LD1-C48-WH-8	1,7
A6F	8' X 2.5" RECTANGULAR LINEAR RECESSED FIXTURE	RECESSED IN GYP	LED	4000	29	120	FOCAL POINT # FSM2LS-BW-500LF-935K-120LD1-TF-WH-8	7
B2	2' X 2' LED LAY-IN FIXTURE	LAY-IN	LED	4000	51	120	FOCAL POINT # FEQ2-22-AC- 5000L-92765T-1C-UNV-LD1-G-WH	7
C6	6" ROUND RECESSED DOWNLIGHT	RECESSED	LED	2000	23	120	FOCAL POINT # FLC6D-RF-2000L-120-LD1-T-LC6-RD-935K-DN-CD-WH	7
D	8'X4' THREE GLOBE OVAL PENDANT	PENDANT	LED	4500	57	120	BUZZISURF #LED TRIO GLOBE120V 3500K	7
CP4	4.5" ROUND PENDANT CYLINDER FIXTURE	PENDANT	LED	2000	26	120	FOCAL POINT # FLCY4-RD-WHG- 2000L-935K-1C-120-SC-LH1-C72-G-WFL-CD-WH	
CX	6" ROUND RECESSED EXTERIOR DOWNLIGHT	RECESSED IN GYP	LED	2500	30	120	FOCAL POINT # FLC6D-RF-2500L-120-LD1-T-LC6-RD-935K-DN-CD-WH-WL	5
PF	15" ROUND PENDANT CANOPY FIXTURE	PENDANT TO 10'	LED	4087	50	120	LUMINIS #EG151-L2L40-SYM-35K-MVOLT-SPG-24-BZT	5
H1	22" ROUND PENDANT SHADE	PENDANT	LED	959	10	120	LIGHT ART # ACC-SHPE-EMP-22D-VL–ZN-STD-RWPC-WH-WPF-935CK-900LM-WFL-LV01	
H2	8'X4' RECTANGULAR PENDANT WING	PENDANT	LED	4400	46	120	LIGHT ART # ACC-SHPE-WING-96L-OCH–FELT-STD--935CK-550LM-PO1-STD -WPC-WH	
V1	24"W LINEAR VANITY FIXTURE	WALL	LED	1500	18	120	LITHONIA # FMVTSL 24IN MVOLT 30K 90CRI BN M4	3
V2	24"W VANDAL RESISTANT VANITY FIXTURE	WALL	LED	1500	18	120	LITHONIA # LVP524 2FT MIN1 15W 35K 120 CLP WHT	3
W2	6"X 10"X4" EXTERIOR WALL SCONCE	WALL	LED	465	12	120	LITHONIA # WDGE1 LED P2 35K 80CRI VF MVOLT SRM PE E4WH DDBXD	1,5
L2	POLE MOUNTED AREA DOWN LIGHT NEMA II DISTRIBUTION	POLE	LED	24500	194	208	LITHONIA #RSX3 LED P1 40K R3 MVOLT SPA PE DDBXD	2,6
L1	POLE MOUNTED AREA DOWN LIGHTS WITH NEMA II DISTRIBUTION	POLE	LED	6259	57	208	LUMINIS # BVA21-LIL60-LD2-35K-MVOLTNLTMSH-BKT	6
S4	4'X6" LED SERVICE LIGHT	SURFACE	LED	3000	25	120	LITHONIA #ZL1N L48 3000LM FST MVOLT 40K 80CRI	
S8	8'X6" LED SERVICE LIGHT	SURFACE	LED	3000	25	120	LITHONIA #ZL1N L96 6000LM FST MVOLT 40K 80CRI	
CR4	4'X5" LED CORROSION RESISTANT LIGHT	SURFACE	LED	5300	40	120	NUVO #65-821R1	
X	LED EGDE LIT EXIT SIGN	WALL- 8" ABOVE DOOR	LED	3000	25	120	LITHONIA #EDG-X-G-EL	

NOTES:
1 - SEE ARCHITECTURAL ELEVATIONS & COORD. W/ G.C. FOR MOUNTING HEIGHT.
2 - PROVIDE 16 ' 4" SQUARE ALUMINUM POLE, ASSOCIATED MOUNTING ARMS AND ACCESSORIES
3 - MOUNT FIXTURE ABOVE MIRROR
4 - PROVIDE INTEGRAL MOTION SENSING CONTROL
5 - WET LABEL
6 - PROVIDE PHOTCELL CONTROL
7 - 0-10V DIMMING

Susan Hatchell
Landscape Architecture, PLLC
711 W. North Street, Raleigh, NC 27603
p: 919-838-9600 f: 919-838-9700

Wooten
129 North Boylan Avenue • Raleigh, NC 27603-1423
(919) 828-0531 • thewootencompany.com
License Number : F-0115

COVER SHEET

NORTH CAROLINA PROFESSIONAL ENGINEER SEAL
Signed by: 16765
ROBERT E. EGAN
7/24/2026

LAKE MYRA COUNTY PARK
Wake County, NC

REVISIONS

Date: 07/27/26

ES-E001

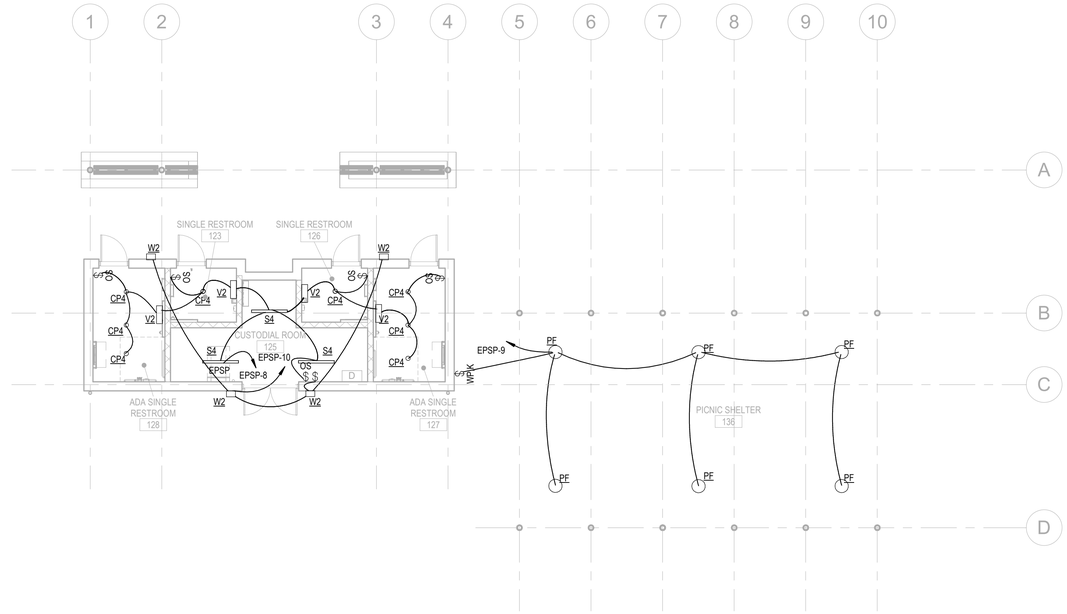

2 ES-E101 LIGHTING PLAN
1/8" = 1'-0"

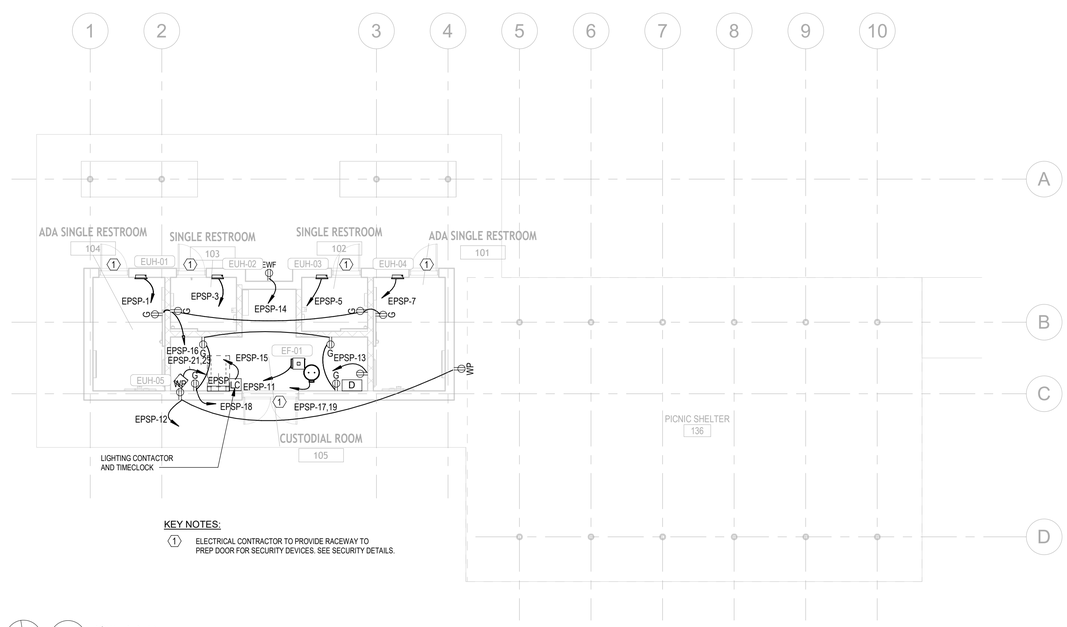

KEY NOTES:

1. ELECTRICAL CONTRACTOR TO PROVIDE RACEWAY TO PREP DOOR FOR SECURITY DEVICES. SEE SECURITY DETAILS.

1 ES-E101 POWER PLAN
1/8" = 1'-0"

Susan Hatchell
Landscape Architecture, PLLC
711 W. North Street, Raleigh, NC 27603
p: 919-838-9600 f: 919-838-9700

Wooten
120 North Boylan Avenue • Raleigh, NC 27603-1423
(919) 828-0531 • thewootencompany.com
License Number : F-0115

POWER AND LIGHTING PLANS

NORTH CAROLINA PROFESSIONAL ENGINEER SEAL
Signed by: 16765
ROBERT E. EGAN
7/24/2026

LAKE MYRA COUNTY PARK
Wake County, NC

REVISIONS

Date: 07/27/26

ES-E101

Panel Name: EPSP
Location: CUSTODIAL ROOM 125
Supply: MFP1
Mounting Surface
Enclosure: NEMA 1

Voltage: 208Y/120/3ø, 4W

Mains Type: MCB
Mains Rating: 150 A

SCCR: 10000

Ckt	Description	Rating	Poles	Wire Size	A		B		C		Wire Size	Poles	Rating	Description	Ckt
1	UNIT HEATER RESTROOM 128	20	1	2#12, #12G, 3/4"C	1000	180					5#10, #12G, 3/4"C	2	20	SITE LIGHTS	2
3	UNIT HEATER RESTROOM 123	20	1	2#12, #12G, 3/4"C			1000	180							4
5	UNIT HEATER RESTROOM 126	20	1	2#12, #12G, 3/4"C					1000	360	WITH CIRCUIT ABOVE	1	20	POLE CAMERAS	6
7	UNIT HEATER RESTROOM 127	20	1	2#12, #12G, 3/4"C	1000	309					2#12, #12G, 3/4"C	1	20	LTS -125, 127, 128, 123, 126	8
9	LTS PICNIC SHELTER 136	20	1	2#12, #12G, 3/4"C			333	67			2#12, #12G, 3/4"C	1	20	WALL PACK LTS	10
11	EF CUSTODIAL ROOM 125	20	1	2#12, #12G, 3/4"C					85	360	2#12, #12G, 3/4"C	1	20	REC - EXT	12
13	DATA CABINET 125	20	1	2#12, #12G, 3/4"C	180	350					2#12, #12G, 3/4"C	1	20	REC - EWC	14
15	TIME CLOCK/CONTACTOR	20	1	2#12, #12G, 3/4"C			150	720			2#12, #12G, 3/4"C	1	20	REC -CUST 105	16
17	WATER HEATER 125	30	2	2#10, #10G, 3/4"C					2250	720	2#12, #12G, 3/4"C	1	20	REC-RESTROOMS	18
19					2250	3600					2#6, #10G, 1"C	2	50	FOOD TRUCK PEDESTAL	20
21	UNIT HEATER	60	2	2#4, #10G, 1"C			1650	3600							22
23									1650	0	--	1	20	SPARE	24
25	SPARE	20	1	--	0	0					--	1	20	SPARE	26
27	SPARE	20	1	--			0	0			--	1	20	SPARE	28
29	SPACE	--	1	--					--	--	--	1	--	SPACE	30
				Connected Load:	9 kVA		8 kVA		6 kVA						
				Connected Current:	76 A		66 A		54 A						

Load Classification	Connected	Factor	Demand
Motor	85 VA	125.00%	106 VA
Other	8070 VA	100.00%	8070 VA
Lighting - Interior	709 VA	125.00%	886 VA
Receptacle - General	2330 VA	100.00%	2330 VA
Electric Water Heating	4500 VA	125.00%	5625 VA
Electric Heat	7300 VA	125.00%	9125 VA

Panel Totals	
Connected Load:	23 kVA
Connected Current:	64 A
Demand Load:	26 kVA
Demand Current:	73 A

Notes: Provide GFI breaker for circuits 14 and 20.

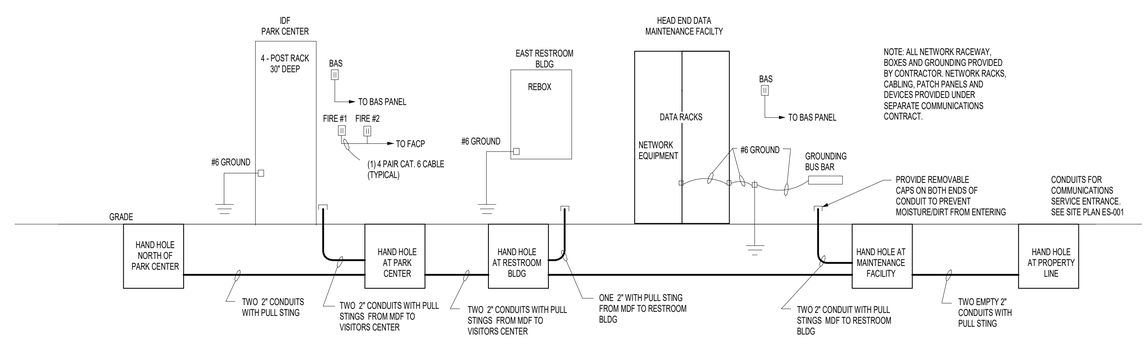

1 / ES-E301 COMMUNICATION NETWORK RISER EAST
NOT TO SCALE

Susan Hatchell
Landscape Architecture, PLLC
711 W. North Street, Raleigh, NC 27603
p: 919-838-9600 f: 919-838-9700

Wooten
129 North Boylan Avenue • Raleigh, NC 27603-1423
(919) 828-0531 • thewootencompany.com
License Number : F-0115

RISERS

NORTH CAROLINA PROFESSIONAL ENGINEER SEAL 16765 ROBERT E. EGAN
Signed
7/24/2026

LAKE MYRA COUNTY PARK
Wake County, NC

REVISIONS

Date: 07/27/26

ES-E301

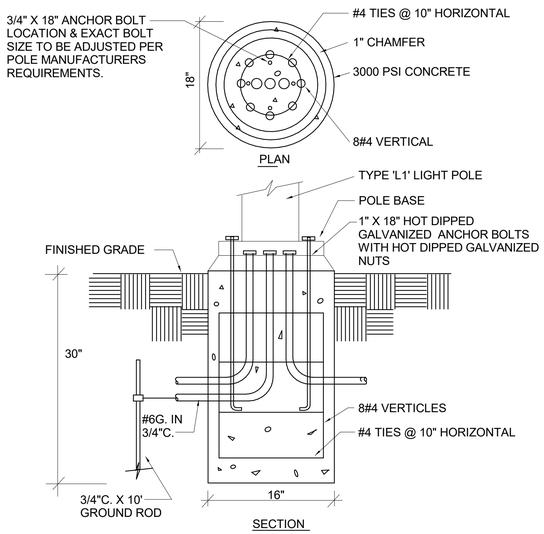

1 ES-E401 FLUSH POLE BASE DETAIL
NOT TO SCALE:

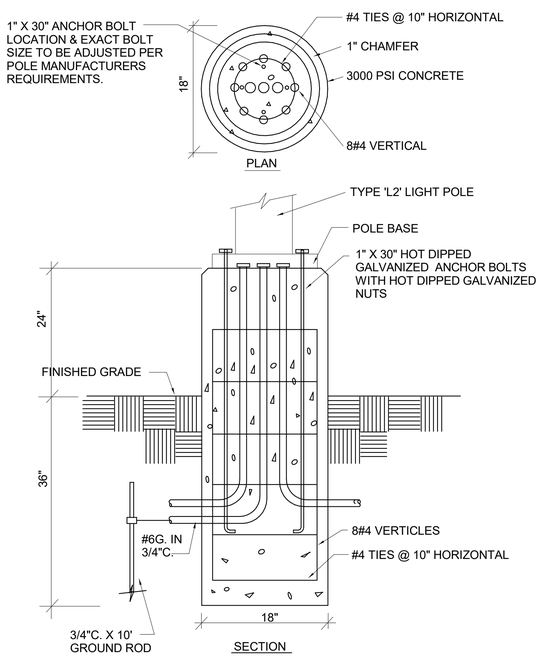

2 ES-E401 RAISED POLE BASE DETAIL
NOT TO SCALE:

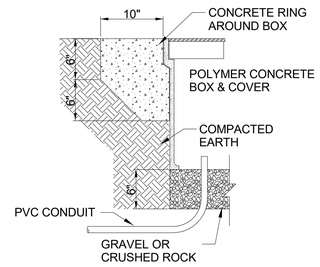

3 ES-E401 HANDHOLE INSTALLATION DETAIL
NOT TO SCALE:

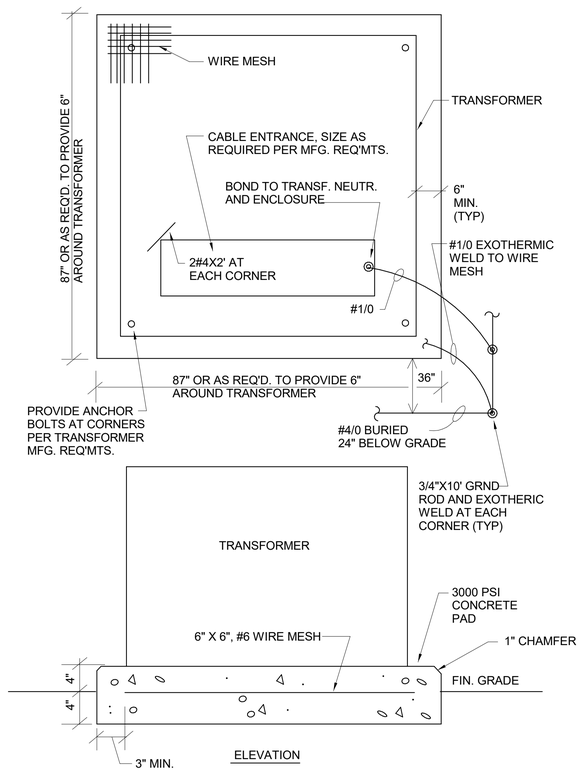

4 ES-E401 TRANSFORMER PAD DETAILDUCT BANK SECTION
NOT TO SCALE:

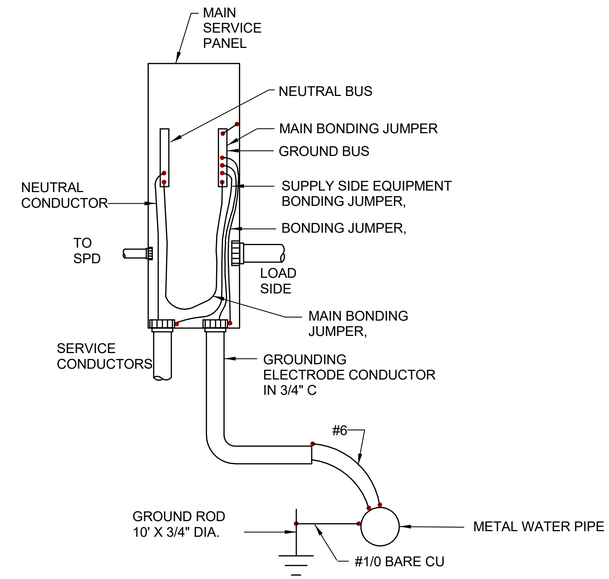

5 ES-E401 SERVICE GROUNDING DETAIL
NOT TO SCALE:

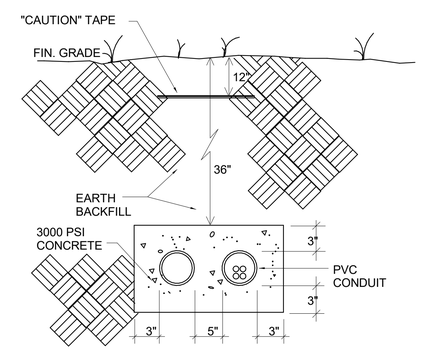

6 ES-E401 DUCT BANK SECTION
NOT TO SCALE:

Susan Hatchell
Landscape Architecture, PLLC
711 W. North Street, Raleigh, NC 27603
p: 919-838-9600 f: 919-838-9700

Wooten
128 North Boylan Avenue • Raleigh, NC 27603-1423
(919) 828-0531 • thewootencompany.com
License Number: F-0115

DETAILS

NORTH CAROLINA PROFESSIONAL ENGINEER SEAL 16765 ROBERT E. EGAN
Signed by:
7/24/2026

LAKE MYRA COUNTY PARK
Wake County, NC

REVISIONS

Date: 07/27/26

ES-E401