Craven Community College
Public Safety Training Center

525 Executive Parkway New Bern, NC 28562

SCO# 24-27879-01A

VICINITY MAP

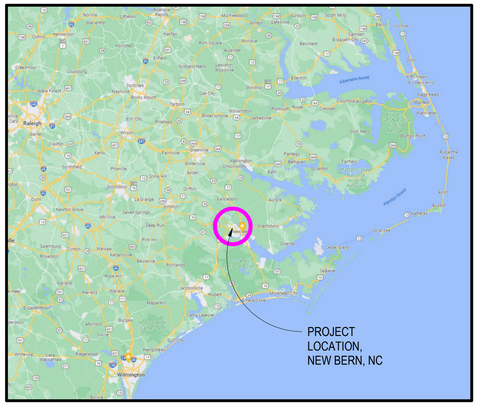

LOCATION MAP

ADDITIVE BID ALTERNATES

BID ALTERNATE 01:
PROVIDE BURN DRILL TOWER. INCLUDING CONCRETE FOUNDATION, AND CONCRETE FLOOR SYSTEMS.

BID ALTERNATE 02:
PROVIDE MODULAR CLASSROOM BUILDING, INCLUDING ACCESSIBLE STAIRS/RAMP AND FOUNDATION.

BID ALTERNATE 03:
PROVIDE (2) REHAB SHELTERS. INCLUDING LIGHTING AND FOUNDATION/SLAB FOR OWNER PROVIDED AND INSTALLED METAL CANOPIES.

BID ALTERNATE 04:
PROVIDE FLOOD LIGHTING FOR DRIVER TRAINING PAD. (4) FIXTURES, POLES, FOUNDATIONS, ASSOCIATED POWER AND CONTROLS.

BID ALTERNATE 05:
PROVIDE CONCRETE FOUNDATION AND SLAB FOR GATEHOUSE BUILDING. PROVIDE MECHANICAL SYSTEM, POWER AND LIGHTING FOR OWNER PROVIDED AND INSTALLED GATEHOUSE STRUCTURE.

BID ALTERNATE 06:
OWNER PREFERRED ALTERNATE FOR INDOOR RANGE EQUIPMENT. INCLUDING RANGE MECHANICAL SYSTEM, RANGE STALLS, CEILING BAFFLES, WALL BAFFLES, TARGET RETRIEVAL SYSTEM & TARGETS, STEEL CONTAINMENT TRAP AND COLLECTION SYSTEM, AND RANGE CONTROL SYSTEM.

BID ALTERNATE 07:
PROVIDE OWNER PREFERRED ALTERNATE FOR BUILDING MECHANICAL SYSTEM CONTROLS. SEE MECHANICAL DRAWINGS.

GOVERNING REGULATIONS

BUILDING CODE:
NORTH CAROLINA STATE BUILDING CODE (2018)

ACCESSIBILITY CODE:
ACCESSIBLE AND USABLE BUILDINGS & FACILITIES- ICC A117.1 2009

MECHANICAL CODE:
NORTH CAROLINA STATE MECHANICAL CODE (2018)
NORTH CAROLINA FUEL GAS CODE. (2018)

ELECTRICAL CODE:
NFPA 70, NATIONAL ELECTRIC CODE (2020 WITH NC AMENDMENTS)

PLUMBING CODE:
NORTH CAROLINA STATE PLUMBING CODE (2018)

FIRE PREVENTION & LIFE SAFETY CODE:
NORTH CAROLINA STATE FIRE PREVENTION CODE (2018)

WALKER the GROUP ARCHITECTURE incorporated
PO BOX 541, NEW BERN, NC 28563
252-636-8778

Christopher B. Walker REGISTERED SEAL 15616 07/28/25 ARCHITECT NORTH CAROLINA

THE WALKER GROUP ARCHITECTURE INCORPORATED REGISTERED ARCHITECTURAL CORPORATION CERT. NO. 51132 NORTH CAROLINA NEW BERN, NC

CRAVEN COMMUNITY COLLEGE- PUBLIC SAFETY TRAINING CENTER

525 Executive Pkwy
New Bern, NC 28562

Bid Documents

SCO # 24-27879-01A

No.	Date	Revisions

Project Number: 2407.SAFE
Date: 07/28/25
Drawn: EC
Checked: CBW
Scale: AS NOTED

Drawing Title

TITLE SHEET & LOCATION MAPS

Sheet Number
1 Of 158

Drawing Number
GI001

INDEX OF DRAWINGS

SHEET NO.		
NO.	SHEET	SHEET TITLE
GENERAL		
1	GI001	TITLE SHEET & LOCATION MAPS
2	GI002	INDEX OF DRAWINGS
3	GI003	INDOOR RANGE - CODE ANALYSIS
4	GI004	REHAB BLDG - CODE ANALYSIS
5	GI005	MODULAR CLASSROOM BLDG - CODE ANALYSIS
6	GI006	GATEHOUSE - CODE ANALYSIS
7	GI007	DRILL/BURN TOWER - CODE ANALYSIS
8	GI008	RANGE BLDG - LIFE SAFETY PLAN
9	GI009	REHAB BLDG - LIFE SAFETY PLAN
10	GI010	MOD. CLASS BLDG & GATEHOUSE - LIFE SAFETY PLAN
CIVIL		
11	C-001	CIVIL NOTES, LEGEND AND ABBREVIATIONS
12	C-100	OVERALL SITE PLAN- EXISTING CONDITIONS
13	CD101	ENLARGED SITE PLAN- EXISTING CONDITIONS
14	CD102	ENLARGED SITE PLAN- EXISTING CONDITIONS
15	CD103	ENLARGED SITE PLAN- EXISTING CONDITIONS
16	CD104	ENLARGED SITE PLAN- EXISTING CONDITIONS
17	CD105	ENLARGED SITE PLAN- EXISTING CONDITIONS
18	CD106	ENLARGED SITE PLAN- EXISTING CONDITIONS
19	CD107	ENLARGED SITE PLAN- EXISTING CONDITIONS
20	CD108	ENLARGED SITE PLAN- EXISTING CONDITIONS
21	CD109	ENLARGED SITE PLAN- EXISTING CONDITIONS
22	CD110	ENLARGED SITE PLAN- EXISTING CONDITIONS
23	CD111	ENLARGED SITE PLAN- EXISTING CONDITIONS
24	CD112	ENLARGED SITE PLAN- EXISTING CONDITIONS
25	CS100	OVERALL SITE PLAN - PROPOSED CONDITIONS
26	CS101	ENLARGED SITE LAYOUT PLAN
27	CS102	ENLARGED SITE LAYOUT PLAN
28	CS103	ENLARGED SITE LAYOUT PLAN
29	CS104	ENLARGED SITE LAYOUT PLAN
30	CS105	ENLARGED SITE LAYOUT PLAN
31	CS106	ENLARGED SITE LAYOUT PLAN
32	CS107	ENLARGED SITE LAYOUT PLAN
33	CS108	ENLARGED SITE LAYOUT PLAN
34	CS109	ENLARGED SITE LAYOUT PLAN
35	CS110	ENLARGED SITE LAYOUT PLAN
36	CS111	ENLARGED SITE LAYOUT PLAN
37	CS112	ENLARGED SITE LAYOUT PLAN
38	CG100	OVERALL SITE GRADING PLAN & EROSION CONTROL PLAN
39	CG101	ENLARGED SITE GRADING PLAN & EROSION CONTROL PLAN
40	CG102	ENLARGED SITE GRADING PLAN & EROSION CONTROL PLAN
41	CG103	ENLARGED SITE GRADING PLAN & EROSION CONTROL PLAN
42	CG104	ENLARGED SITE GRADING PLAN & EROSION CONTROL PLAN
43	CG105	ENLARGED SITE GRADING PLAN & EROSION CONTROL PLAN
44	CG106	ENLARGED SITE GRADING PLAN & EROSION CONTROL PLAN
45	CG107	ENLARGED SITE GRADING PLAN & EROSION CONTROL PLAN
46	CG108	ENLARGED SITE GRADING PLAN & EROSION CONTROL PLAN
47	CG109	ENLARGED SITE GRADING PLAN & EROSION CONTROL PLAN
48	CG110	ENLARGED SITE GRADING PLAN & EROSION CONTROL PLAN
49	CG111	ENLARGED SITE GRADING PLAN & EROSION CONTROL PLAN
50	CG112	ENLARGED SITE GRADING PLAN & EROSION CONTROL PLAN
51	CG301	STORMWATER RETENTION POND #1
52	CG302	STORMWATER RETENTION POND #1 SECTION AND DETAILS
53	CG303	STORMWATER RETENTION POND #2

SHEET NO.		
NO.	SHEET	SHEET TITLE
54	CG304	STORMWATER RETENTION POND #2 SECTION AND DETAILS
55	CG305	STORMWATER RETENTION POND #3
56	CG306	STORMWATER RETENTION POND #3 SECTIONS AND DETAILS
57	CG307	ENLARGED SITE GRADING PLAN WETLAND IMPACTS
58	CU100	OVERALL SITE UTILITY PLAN
59	CU101	ENLARGED SITE UTILITY PLAN
60	CU102	ENLARGED SITE UTILITY PLAN
61	CU103	ENLARGED SITE UTILITY PLAN
62	CU104	ENLARGED SITE UTILITY PLAN
63	CU105	ENLARGED SITE UTILITY PLAN
64	CU106	ENLARGED SITE UTILITY PLAN
65	CU107	ENLARGED SITE UTILITY PLAN
66	CU108	ENLARGED SITE UTILITY PLAN
67	CU109	ENLARGED SITE UTILITY PLAN
68	CU110	ENLARGED SITE UTILITY PLAN
69	CU111	ENLARGED SITE UTILITY PLAN
70	CU112	ENLARGED SITE UTILITY PLAN
71	CS501	DETAILS
72	CS502	DETAILS
73	CS503	DETAILS
74	CS504	DETAILS
75	CS505	DETAILS
76	CG501	DETAILS
77	CG502	DETAILS
78	CG503	DETAILS
79	CG504	DETAILS
80	CU501	DETAILS
81	CU502	DETAILS
82	CU503	DETAILS
83	CU504	DETAILS
ARCHITECTURE		
84	A-001	ARCHITECTURAL NOTES & SYMBOLS
85	A-002	ACCESSIBLE MOUNTING HEIGHTS & DETAILS
86	A-003	WALL & ROOF TYPE ASSEMBLIES
87	A-100	ARCHITECTURAL SITE PLAN
88	A-101	INDOOR RANGE FLOOR PLAN
89	A-102	REHAB SHELTER FLOOR PLAN
90	A-103	DRILL/BURN TOWER FLOOR PLANS
91	A-104	DRILL/BURN TOWER FLOOR PLANS
92	A-105	MODULAR CLASSROOM FLOOR PLAN
93	A-106	GATEHOUSE BUILDING FLOOR PLANS
94	A-107	INDOOR RANGE REFLECTED CEILING PLAN
95	A-108	REHAB SHELTER REFLECTED CEILING PLAN
96	A-109	INDOOR RANGE ROOF PLAN
97	A-110	REHAB SHELTER ROOF PLAN
98	A-201	INDOOR RANGE ELEVATIONS
99	A-202	REHAB SHELTER ELEVATIONS
100	A-203	DRILL/BURN TOWER ELEVATIONS
101	A-204	DRILL/BURN TOWER ELEVATIONS
102	A-205	MODULAR CLASSROOM ELEVATIONS
103	A-206	GATEHOUSE ELEVATIONS
104	A-301	INDOOR RANGE BUILDING SECTIONS
105	A-302	REHAB SHELTER BUILDING SECTION
106	A-303	DRILL/BURN TOWER BUILDING SECTION
107	A-304	BUILDINGS SECTIONS

SHEET NO.		
NO.	SHEET	SHEET TITLE
108	A-305	INDOOR RANGE WALL SECTIONS
109	A-401	INDOOR RANGE ENLARGED PLAN & INT. ELEVATIONS
110	A-402	REHAB SHELTER ENLARGED PLAN & INT. ELEVATIONS
111	A-403	ENLARGED DECK & RAMP FRAMING PLAN
112	A-501	CANOPY DETAILS
113	A-502	ROOF DETAILS
114	A-503	INTERIOR DETAILS
115	A-504	METAL STUD FRAMING DETAILS
116	A-601	SCHEDULES & DETAILS
117	A-602	DETAILS
STRUCTURAL		
118	S001	GENERAL NOTES
119	S002	GENERAL NOTES AND ABBREVIATIONS
120	S101	INDOOR RANGE FOUNDATION PLAN AND SECTIONS
121	S102	WHP DRILL/BURN BUILDING FOUNDATION PLAN AND SECTIONS
122	S103	REHAB SHELTER FOUNDATION PLAN AND SECTIONS
123	S104	STORAGE BUILDING FOUNDATION PLAN AND SECTIONS
124	S105	GATEHOUSE FOUNDATION PLAN AND SECTIONS
125	S110	INDOOR RANGE ROOF FRAMING PLAN AND SECTIONS
126	S111	INDOOR RANGE BOTTOM CHORD PLAN
127	S112	REHAB SHELTER ROOF FRAMING PLAN AND SECTIONS
128	S501	TYPICAL DETAILS
129	S502	TYPICAL DETAILS
PLUMBING		
130	P-001	LEGEND, NOTES AND ABBREVIATIONS
131	P-002	FIXTURE PLATES
132	P-101	INDOOR RANGE DOMESTIC WATER PLAN
133	P-102	REHAB SHELTER DOMESTIC WATER PLAN
134	P-201	INDOOR RANGE SANITARY PLAN
135	P-202	REHAB SHELTER SANITARY PLAN
136	P-501	DETAILS
137	P-601	RISER DIAGRAM
MECHANICAL		
138	M-001	LEGEND, NOTES AND ABBREVIATIONS
139	M-101	INDOOR RANGE FLOOR PLAN
140	M-102	REHAB SHELTER AND GATEHOUSE PLAN
141	M-501	DETAILS
142	M-502	DETAILS
143	M-601	SCHEDULES
144	M-701	CONTROLS
ELECTRICAL		
145	E-001	LEGEND, NOTES AND ABBREVIATIONS
146	E-002	SITE PLAN
147	E-101	INDOOR RANGE LIGHTING PLAN
148	E-102	LIGHTING FLOOR PLANS
149	E-201	POWER FLOOR PLAN & SCHEDULES
150	E-202	POWER FLOOR PLAN & SCHEDULES
151	E-203	MODULAR CLASSROOM POWER PLAN
152	E-501	DETAILS
153	E-502	DETAILS
154	E-503	DETAILS
155	E-504	DETAILS
156	E-601	RISER DIAGRAM
157	E-602	RISER DIAGRAM
158	E-901	OVERALL SITE PLAN - PHOTOMETRICS

WALKER the GROUP ARCHITECTURE incorporated
PO BOX 541, NEW BERN, NC 28563
252-636-8778

Christopher B. Walker REGISTERED SEAL 15616 07/28/25 ARCHITECT NORTH CAROLINA

THE WALKER GROUP ARCHITECTURE INCORPORATED REGISTERED ARCHITECTURAL CORPORATION CERT. NO. 51132 NORTH CAROLINA NEW BERN, NC

CRAVEN COMMUNITY COLLEGE- PUBLIC SAFETY TRAINING CENTER

525 Executive Pkwy
New Bern, NC 28562

Bid Documents

SCO # 24-27879-01A

Revisions

No.	Date

Project Number: 2407.SAFE
Date: 07/28/25
Drawn: EC
Checked: CBW
Scale: AS NOTED

Drawing Title

INDEX OF DRAWINGS

Sheet Number
2 Of 158

Drawing Number
GI002

2018 APPENDIX B
BUILDING CODE SUMMARY FOR ALL COMMERCIAL PROJECTS
INDOOR RANGE BUILDING

Name of Project:- Craven Community College Public Safety Training Center - Indoor Range

Address:- 525 Executive Parkway New Bern, NC Zip Code: 28562

Owner or Authorized Agent:_ Chris Walker Phone # : 252-636-8778 Email : chris@wgarc.com

Owned By: [ ] City/County [X] Private [ ] State

Code Enforcement Jurisdiction [ ] City [X] County _Craven County [ ] State

CONTACT

DESIGNER	FIRM	NAME	LICENSE #	TELEPHONE #	EMAIL
Architectural	The Walker Group Architecture, Inc.	Chris Walker	15616	252-636-8778	chris@wgarc.com
Civil	Avolis Engineering	John Kevin Avolis	15738	252-633-0068	avolisengineering@embarqmail.com
Electrical	PACE Collaborative	Keyen Mears	053623	757-499-4223	keyen@pace-pme.com
Fire Alarm					
Plumbing	PACE Collaborative	Tim Hahn	046553	757-499-4223	tim@pace-pme.com
Mechanical	PACE Collaborative	Tim Hahn	046553	757-499-4223	tim@pace-pme.com
Sprinkler-Standpipe					
Structural	NRW Engineering	Kevin Roomsburg	022830	757-474-0612	kmr@nrwengineering.com
Retaining Walls > 5' High					
Other					

("Other" should include firms and individuals such as truss, precast, pre-engineered, interior designers, etc.)

2018 NC BUILDING CODE: [X] New Building [ ] Addition [ ] Renovation
[ ] 1st Time Interior Completion
[ ] Shell/Core - Contact the local inspection jurisdiction for possible additional procedures and requirements
[ ] Phased Construction- Shell/Core - Contact the local inspection jurisdiction for possible additional procedures and requirements

2015 NC EXISTING BUILDING CODE: [ ] Prescriptive [ ] Repair [ ] Chapter 14
[ ] Level I [ ] Level II [ ] Level III
[ ] Historic Property [ ] Change of Use

CONSTRUCTED: (date)_____ **CURRENT OCCUPANCY(S): (Ch.3):**_____

RENOVATED: (date)_____ **PROPOSED OCCUPANCY(S): (Ch.3):** _(B) Business , (A-3) Assembly

RISK CATEGORY: (Table 1604.5) Current: [ ] I [X] II [ ] III [ ] IV
Proposed: [ ] I [X] II [ ] III [ ] IV

BASIC BUILDING DATA

Construction Type: (Check all that apply) [ ] I-A [ ] II-A [ ] III-A [ ] IV [ ] V-A
[ ] I-B [X] II-B [ ] III-B [ ] V-B

Sprinkler: [X] No [ ] Partial [ ] Yes [ ] NFPA 13 [ ] NFPA 13R [ ] NFPA 13D

Standpipes: [X] No [ ] Yes Class [ ] I [ ] II [ ] III [ ] Wet [ ] Dry

Fire District: [X] No [ ] Yes **Flood Hazard Area:** [X] No [ ] Yes

Special Inspections Required: [X] No [ ] Yes (Contact the local inspection jurisdiction for additional peroedures and requirements.)

Gross Building Area Table

FLOOR	EXISTING (SQ.FT)	NEW (SQ.FT)	SUBTOTAL
Roof			
4th Floor			
3rd Floor/Attic			
2nd Floor			
1st Floor		8023 SF	8023 SF
TOTAL			

ALLOWABLE AREA

Primary Occupancy Classifications(s):

Assembly [ ] A-1 [ ] A-2 [X] A-3 [ ] A-4 [ ] A-5
Business [X]
Educational [ ]
Factory [ ] F-1 Moderate [ ] F-1 Low
Hazardous [ ] H-1 Detonate [ ] H-2 Deflagrate [ ] H-3 Combust [ ] H-4 Health [ ] H-5 HPM
Institutional [ ] I-1 Condition [ ] 1 [ ] 2
[ ] I-2 Condition [ ] 1 [ ] 2
[ ] I-3 Condition [ ] 1 [ ] 2
[ ] I-4
Mercantile [ ]
Residential [ ] R-1 [ ] R-2 [ ] R-3 [ ] R-4
Storage [X] S-1 Moderate [ ] S-2 Low [ ] High-Piled
[ ] Parking Garage [ ] Open [ ] Enclosed [ ] Repair Garage
Utility & Miscellaneous [ ]

Accessory Occupancy Classifications(s):_____

Incidental Uses (Table 509):_____

Special Uses (Chapter 4- List Code Sections):_____

Special Provisions (Chapter 5- List Code Sections):_____

Mixed Occupancy: [ ] No [X] Yes Separation_0_ Hr. Exception:_____

[X] Non-Separated Use (508.3) - The required type of construction for the building shall be determined by applying the height and area limitations for each of the applicable occupancies to the entire building. The most restrictive type of construction, so determined, shall apply to the entire building.

[ ] Separated Use (302.3.2) - See below for area calculations for each story, the area of the occupancy shall be such that the sum of the ratios of the actual floor area of each use divided by the allowable floor area for each use shall not exceed 1.

Actual Area of Occupancy A / *Allowable Area of Occupancy A* + *Actual Area of Occupancy B* / *Allowable Area of Occupancy B* ≤1
_____ + _____ = _____ ≤1.00

STORY NO.	DESCRIP. & USE	(A) BLDG. AREA PER STORY (ACTUAL)	(B) TABLE 506.2[2] AREA	(C) AREA FOR FRONTAGE INCREASE[1,2]	(D) ALLOWABLE AREA PER STORY OR UNLIMITED[2,3]
1st Floor	Assembly (A-3)	8,023 SF	9,500 SF	7,125 SF	16,625 SF

[1] Frontage area increases from Section 506.3 are computed thus:
a. Perimeter which fronts a public way or open space having 20 feet minimum width = 450' (F)
b. Total Building Perimeter = 450' (P)
c. Ratio (F/P) = 1 (F/P)
d. W = Minimum width of public way = 30' (W)
e. Percent of frontage increase I = 100 [F/P-0.25] x W/30= 75 (%)
[2] Unlimited area applicable under conditions of Section 507.
[3] Maximum Building Area = total number of stories in the building x D (maximum 3 stories) (506.2).
[4] The maximum area of parking garages must comply with Table 406.5.4.
[5] Frontage increase is based on the unsprinklered area value in Table 506.2.

ALLOWABLE HEIGHT

	ALLOWABLE	SHOWN ON PLAN	CODE REFERENCE[1]
Building Height in Feet (Table 504.3)[2]	55'	20'-4"	503
Building Height in Stories (Table 504.4)	2	1	503

[1] Provide code reference if the "Shown on Plans" quantity is not based on Table 504.3 or 504.4.
[2] The maximum height of air traffic control towers must comply with Table 412.3.1.
[3] The maximum height of open parking garages must comply with Table 406.5.4.

FIRE PROTECTION REQUIREMENTS

Life Safety Plan Sheet #, if Provided:_ GI004 _

BUILDING ELEMENT	FIRE SEPARATION DISTANCE (FEET)	RATING REQ'D	RATING PROVIDED (W/_____ REDUCTION)	DETAIL # AND SHEET #	DESIGN # FOR RATED ASSEMBLY	DESIGN # FOR RATED PENETRATION	DESIGN # FOR RATED JOINTS
Structural Frame including columns, girders, trusses	>30 Ft	0	0	N/A	N/A	N/A	N/A
Bearing walls		0	0	N/A	N/A	N/A	N/A
Exterior		0	0	N/A	N/A	N/A	N/A
North	>30 Ft	0	0	N/A	N/A	N/A	N/A
East	>30 Ft	0	0	N/A	N/A	N/A	N/A
West	>30 Ft	0	0	N/A	N/A	N/A	N/A
South	>30 Ft	0	0	N/A	N/A	N/A	N/A
Interior	>30 Ft	0	0	N/A	N/A	N/A	N/A
Nonbearing walls and partitions							
Exterior							
North	>30 Ft	0	0	N/A	N/A	N/A	N/A
East	>30 Ft	0	0	N/A	N/A	N/A	N/A
West	>30 Ft	0	0	N/A	N/A	N/A	N/A
South	>30 Ft	0	0	N/A	N/A	N/A	N/A
Interior							
Floor construction Including supporting beams and joists	N/A	N/A	N/A	N/A	N/A	N/A	N/A
Floor Ceiling Assembly	N/A	N/A	N/A	N/A	N/A	N/A	N/A
Columns Supporting Floors	N/A	N/A	N/A	N/A	N/A	N/A	N/A
Roof Construction Including supporting beams and joists	N/A	N/A	N/A	N/A	N/A	N/A	N/A
Roof Ceiling Assembly	N/A	N/A	N/A	N/A	N/A	N/A	N/A
Columns Supporting Roof	N/A	N/A	N/A	N/A	N/A	N/A	N/A
Shaft Enclosures- Exit	N/A	N/A	N/A	N/A	N/A	N/A	N/A
Shaft Enclosures- Other	N/A	N/A	N/A	N/A	N/A	N/A	N/A
Corridor Separation	N/A	N/A	N/A	N/A	N/A	N/A	N/A
Occupancy/Fire Barrier Separation	N/A	N/A	N/A	N/A	N/A	N/A	N/A
Fire Area Separation	N/A	N/A	N/A	N/A	N/A	N/A	N/A
Smoke Barrier Separation	N/A	N/A	N/A	N/A	N/A	N/A	N/A
Smoke Partition	N/A	N/A	N/A	N/A	N/A	N/A	N/A
Tenant/Dwell. Unit/ Sleeping Unit Separation	N/A	N/A	N/A	N/A	N/A	N/A	N/A
Incidental Use Separation	N/A	N/A	N/A	N/A	N/A	N/A	N/A

PERCENTAGE OF WALL OPENING CALCULATIONS

FIRE SEPARATION DISTANCE (FEET FROM PROPERTY LINES)	DEGREE OF OPENINGS PROTECTION (TABLE 705.8)	ALLOWABLE AREA (%)	ACTUAL SHOWN ON PLANS (%)
N/A	N/A	N/A	N/A

LIFE SAFETY SYSTEM REQUIREMENTS

Emergency Lighting: [ ] No [X] Yes
Exit Signs: [ ] No [X] Yes
Fire Alarm system: [X] No [ ] Yes
Smoke Detection Systems: [X] No [ ] Yes [ ] Partial _____
Carbon Monoxide Detection: [X] No [ ] Yes

LIFE SAFETY PLAN REQUIREMENTS

Life Safety Plan Sheet # _GI004_

[ ] Fire and/or smoke rated wall locations (Chapter 7)
[ ] Assumed and real property line locations (if not on the site plan)
[ ] Exterior wall opening area with respect to distance to assumed property lines (705.8)
[X] Occupancy Use for each area as it relates to occupant load calculations (Table 1004.1.2)
[X] Occupant loads for each area
[X] Exit access travel distances (1017)
[X] Common path of travel distances (Tables 1006.2.1 and 1006.3.2(1))
[X] Dead-end lengths (1020.4)
[X] Clear exit widths for each exit door
[X] Maximum calculated occupant load capacity each exit door can accommodate based on egress width (1005.3)
[X] Actual occupant load for each exit door
[ ] A separate schematic plan indicating where fire rated floor/ceiling and/or roof structure is provided for purposes of occupancy separation
[X] Location of doors with panic hardware (1010.1.10)
[ ] Location of doors with delayed egress locks and the amount of delay (1010.1.9.7)
[ ] Location of doors with electromagnetic egress locks (1010.1.9.9)
[ ] Location of doors equipped with hold-open devices
[ ] Location of emergency escape windows (1030)
[ ] The square footage of each fire area (202)
[ ] The square footage of each smoke compartment for Occupancy Classification I-2 (407.5)
[ ] Note any code exceptions or table notes that may have been utilized regarding the items above

ACCESSIBLE DWELLING UNITS (SECTION 1107) (NOT APPLICABLE)

TOTAL UNITS	ACCESSIBLE UNITS REQUIRED	ACCESSIBLE UNITS PROVIDED	TYPE A UNITS REQUIRED	TYPE A UNITS PROVIDED	TYPE B UNITS REQUIRED	TYPE B UNITS PROVIDED	TOTAL ACCESSIBLE UNITS PROVIDED

ACCESSIBLE PARKING (SECTION 1106)

LOT OR PARKING AREA	TOTAL # OF PARKING SPACES		# OF ACCESSIBLE SPACES PROVIDED			TOTAL # ACCESSIBLE PROVIDED
	REQUIRED	PROVIDED	REGULAR WITH 5' ACCESS AISLE	VAN SPACES WITH 132" ACCESS AISLE	VAN SPACES WITH 8' ACCESS AISLE	
TOTAL	53	58	2			2

PLUMBING FIXTURE REQUIREMENT (TABLE 2902.1) (86 TOTAL BUILDING OCCUPANTS)

USE		WATERCLOSETS			URINALS	LAVATORIES			SHOWERS/ TUBS	DRINKING FOUNTAINS	
		MALE	FEMALE	UNISEX		MALE	FEMALE	UNISEX		REGULAR	ACCESSIBLE
SPACE	EXISTING										
	NEW	1	1			1	1				1
	REQUIRED	1	1			1	1				1

SPECIAL APPROVALS

Special Approval: (Local Jurisdiction, Department of Insurance, OSC, DPI, DHHS, etc., describe below)
STATE CONSTRUCTION OFFICE ELECTRICAL AND FINAL INSPECTIONS

ENERGY SUMMARY

Energy Requirements:
The following data shall be considered minimum and any special attribute required to meet the energy code shall also be provided. Each Designer shall furnish the required portions of the project information for the plan data sheet. If performance method, state the annual energy cost for the standard reference design vs annual energy cost for the proposed design.

Existing building envelope complies with code: [ ] No [ ] Yes (The remainder of this section is not applicable)

Exempt Building: [X] No [ ] Yes (Provide code or statutory reference):_____

Climate Zone: [X] 3A [ ] 4A [ ] 5A

Method of Compliance:
Energy Code [ ] Performance [X] Prescriptive
ASHRAE 90.1 [ ] Performance [X] Prescriptive
(If "other" specify source here)_____

THERMAL ENVELOPE (Prescriptive method only)

Roof/ceiling Assembly (each assembly) PVC ROOOFING, VAPOR BARRIER, 1/2" RECOVERY BOARD, 4" POLYISOCYANURATE INSULATION,
Description of assembly METAL DECKING.
U-Value of total assembly 0.037
R-Value of insulation 26
Skylights in each assembly N/A
U-Value of skylight
Total square footage of skylights in each assembly

Exterior Walls (each assembly) EXTERIOR METAL SIDING, VAPOR BARRIER, 2" POLYISOCYANURATE INSULATION, 8" REINFORCED CMU MASONRY.
Description of assembly:
U-Value of total assembly: 0.07
R-Value of insulation 13
Openings (windows or doors with glazing)
U-Value of assembly: 0.60
Solar heat gain coefficient: 0.25
Projection factor: 0.15
Door R-Values: 1.3

Walls below grade (each assembly)
Description of assembly: N/A
U-Value of total assembly:
R-Value of insulation

Floors over unconditioned space (each assembly)
Description of assembly:
U-Value of total assembly: N/A
R-Value of insulation

Floors slab on grade (each assembly)
Description of assembly: LVT FLOORING, 4" CONCRETE SLAB
U-Value of total assembly: 1.19
R-Value of insulation N/A
Horizontal/vertical requirement N/A
Slab heated N/A

STRUCTURAL DESIGN

DESIGN LOADS:

Importance Factors: Snow (I_s) 1 ; Seismic (I_E) 1

Live Loads: Roof 20 psf; Mezzanine _____ psf; Floor 100 psf

Ground Snow Load: 10 psf

Wind Load: Ultimate Wind Speed 132 mph (ASCE-7-10); Exposure Catgory C

SEISMIC DESIGN CATEGORY: [ ] A [X] B [ ] C [ ] D
Provide the following Seismic Design Parameters:
Risk Category (Table 1604.5) [ ] I [X] II [ ] III [ ] IV
Spectral Response Acceleration S_S 12.9 %g S_1 6.4 %g
Site Classification (ASCE 7) [ ] A [ ] B [ ] C [X] D [ ] E [ ] F
Date Source: [X] Field Test [ ] Presumptive [ ] Historical Data
Basic Structural System [X] Bearing Wall [ ] Dual w/Special Moment Frame
[ ] Building Frame [ ] Dual w/Intermediate R/C or Special Steel
[ ] Moment Frame [ ] Inverted Pendulum
Analysis Procedure: [ ] Simplified [X] Equivalent Lateral Force [ ] Dynamic
Architectural,Mechanical,Components anchored? [ ] Yes [X] No

LATERAL DESIGN CONTROL: [ ] Earthquake [X] Wind

SOIL BEARING CAPACITY:
Field Test (provide copy of test report) 1500 psf
Presumitve Bearing capacity _____ psf
Pile size, type and capacity _____

MECHANICAL DESIGN

MECHANICAL SUMMARY

MECHANICAL SYSTEMS, SERVICE SYSTEMS AND EQUIPMENT

Thermal Zone 3A
winter dry bulb 22 degrees
summer dry bulb 92 degrees

Interior Design Conditions
winter dry bulb 68 degrees
summer dry bulb 78 degrees
relative humidity 50%

Building Heating Load 34 MBH

Building Cooling Load 71.1 MBH

Mechanical Spacing Conditioning System
Unitary (2) package rooftop units with DX coils and gas heating. Hot gas reheat
description of unit will be provided for active humidity control.
heating efficiency 81%
cooling efficiency 15.4 SEER2
size category of unit
Boiler N/A
size category. If oversized, state reason.
Chiller N/A
size category. If oversized, state reason.

List Equipment efficiencies

ELECTRICAL DESIGN

ELECTRICAL SUMMARY

ELECTRICAL SYSTEM AND EQUIPMENT

Method of Compliance:
Energy Code [X] Prescriptive [ ] Performance
ASHRAE 90.1 [ ] Prescriptive [ ] Performance

Lighting Schedule (each fixture type)
lamp type required in fixture
number of lamps in fixture
ballast type used in fixture
number of ballast in fixture
total wattage per fixture
See Fixture Schedule
total interior wattage specified vs. allowed (whole building or space by sqaure) 5239W ALLOWED / 2679W USED
total exterior wattage specified vs. allowed 29069W ALLOWED / 6134W USED (TOTAL SITE)

Additional Efficiency Package Options
When using the 2018 NCECC; not required for ASHRAE 90.1)

[ ] C406.2 More Efficient HVAC Equipment Performance
[X] C406.3 Reduced Lighting Power Density
[ ] C406.4 Enhanced Digital Lighting Controls
[ ] C406.5 On-Site Renewable Energy
[ ] C406.6 Dedicated Outdoor Air System
[ ] C406.7 Reduced Energy Use in Service Water Heating

WALKER the GROUP ARCHITECTURE incorporated
PO BOX 541, NEW BERN, NC 28563
252-636-8778

Christopher B. Walker REGISTERED SEAL 15616 07/28/25 ARCHITECT NORTH CAROLINA

THE WALKER GROUP ARCHITECTURE, INCORPORATED REGISTERED ARCHITECTURAL CORPORATION CERT. NO. 51132 NORTH CAROLINA NEW BERN, NC

CRAVEN COMMUNITY COLLEGE- PUBLIC SAFETY TRAINING CENTER

525 Executive Pkwy
New Bern, NC 28562

Bid Documents

SCO # 24-27879-01A

No.	Date	Revisions

Project Number: 2407.SAFE
Date: 07/28/25
Drawn: EC
Checked: CBW
Scale: AS NOTED

Drawing Title
INDOOR RANGE - CODE ANALYSIS

Sheet Number
3 Of 158

Drawing Number
GI003

2018 APPENDIX B
BUILDING CODE SUMMARY FOR ALL COMMERCIAL PROJECTS
REHAB BUILDING

Name of Project:- Craven Community College Public Safety Training Center - Rehab Building

Address:- 525 Executive Parkway New Bern, NC Zip Code: 28562

Owner or Authorized Agent:- Chris Walker Phone # : 252-636-8778 Email : chris@wgarc.com

Owned By: [ ] City/County [X] Private [ ] State

Code Enforcement Jurisdiction [ ] City_____ [X] County - Craven County [X] State

CONTACT

DESIGNER	FIRM	NAME	LICENSE #	TELEPHONE #	EMAIL
Architectural	The Walker Group Architecture, Inc.	Chris Walker	15616	252-636-8778	chris@wgarc.com
Civil	Avolis Engineering	John Kevin Avolis	15738	252-633-0068	avolisengineering@embarqmail.com
Electrical	PACE Collaborative	Keyen Mears	053623	757-499-4223	keyen@pace-pme.com
Fire Alarm					
Plumbing	PACE Collaborative	Tim Hahn	046553	757-499-4223	tim@pace-pme.com
Mechanical	PACE Collaborative	Tim Hahn	046553	757-499-4223	tim@pace-pme.com
Sprinkler-Standpipe					
Structural	NRW Engineering	Kevin Roomsburg	022830	757-474-0612	knr@nrwengineering.com
Retaining Walls > 5' High					
Other					

("Other" should include firms and individuals such as truss, precast, pre-engineered, interior designers, etc.)

2018 NC BUILDING CODE: [X] New Building [ ] Addition [ ] Renovation
[ ] 1st Time Interior Completion
[ ] Shell/Core - Contact the local inspection jurisdiction for possible additional procedures and requirements
[ ] Phased Construction- Shell/Core - Contact the local inspection jurisdiction for possible additional procedures and requirements

2015 NC EXISTING BUILDING CODE: [ ] Prescriptive [ ] Repair [ ] Chapter 14
[ ] Level I [ ] Level II [ ] Level III
[ ] Historic Property [ ] Change of Use

CONSTRUCTED: (date)_____ **CURRENT OCCUPANCY(S): (Ch.3):**_____

RENOVATED: (date)_____ **PROPOSED OCCUPANCY(S): (Ch.3):** A-5 Assembly

RISK CATEGORY: (Table 1604.5) Current: [ ] I [ ] II [ ] III [ ] IV
Proposed: [ ] I [X] II [ ] III [ ] IV

BASIC BUILDING DATA

Construction Type: (Check all that apply) [ ] I-A [ ] II-A [ ] III-A [ ] IV [ ] V-A
[ ] I-B [ ] II-B [ ] III-B [X] V-B

Sprinkler: [X] No [ ] Partial [ ] Yes [ ] NFPA 13 [ ] NFPA 13R [ ] NFPA 13D

Standpipes: [X] No [ ] Yes Class [ ] I [ ] II [ ] III [ ] Wet [ ] Dry

Fire District: [X] No [ ] Yes **Flood Hazard Area:** [X] No [ ] Yes

Special Inspections Required: [X] No [ ] Yes (Contact the local inspection jurisdiction for additional peocedures and requirements.)

Gross Building Area Table

FLOOR	EXISTING (SQ.FT)	NEW (SQ.FT)	SUBTOTAL
Roof			
4th Floor			
3rd Floor/Attic			
2nd Floor			
1st Floor		1200 SF	1200 SF
TOTAL			1200 SF

ALLOWABLE AREA

Primary Occupancy Classifications(s):

Assembly [ ] A-1 [ ] A-2 [ ] A-3 [ ] A-4 [X] A-5
Business [ ]
Educational [ ]
Factory [ ] F-1 Moderate [ ] F-1 Low
Hazardous [ ] H-1 Detonate [ ] H-2 Deflagrate [ ] H-3 Combust [ ] H-4 Health [ ] H-5 HPM
Institutional [ ] I-1 Condition [ ] 1 [ ] 2
[ ] I-2 Condition [ ] 1 [ ] 2
[ ] I-3 Condition [ ] 1 [ ] 2
[ ] I-4
Mercantile [ ]
Residential [ ] R-1 [ ] R-2 [ ] R-3 [ ] R-4
Storage [ ] S-1 Moderate [ ] S-2 Low [ ] High-Piled
[ ] Parking Garage [ ] Open [ ] Enclosed [ ] Repair Garage
Utility & Miscellaneous [ ]

Accessory Occupancy Classifications(s):_____

Incidental Uses (Table 509):_____

Special Uses (Chapter 4- List Code Sections):_____

Special Provisions (Chapter 5- List Code Sections):_____

Mixed Occupancy: [X] No [ ] Yes Separation 0 Hr. Exception:_____

[ ] Non-Separated Use (508.3) - The required type of construction for the building shall be determined by applying the height and area limitations for each of the applicable occupancies to the entire building. The most restrictive type of construction, so determined, shall apply to the entire building.

[ ] Separated Use (302.3.2) - See below for area calculations for each story, the area of the occupancy shall be such that the sum of the ratios of the actual floor area of each use divided by the allowable floor area for each use shall not exceed 1.

$$\frac{\text{Actual Area of Occupancy A}}{\text{Allowable Area of Occupancy A}} + \frac{\text{Actual Area of Occupancy B}}{\text{Allowable Area of Occupancy B}} \leq 1$$

$$____ + ____ = ____ \leq 1.00$$

STORY NO.	DESCRIP. & USE	(A) BLDG. AREA PER STORY (ACTUAL)	(B) TABLE 506.2[1] AREA	(C) AREA FOR FRONTAGE INCREASE[1,2]	(D) ALLOWABLE AREA PER STORY OR UNLIMITED[3,4,5]
1st Floor	Assembly (A-5)	1200 SF	UL	N/A	UL

[1] Frontage area increases from Section 506.3 are computed thus:
a. Perimeter which fronts a public way or open space having 20 feet minimum width= 140' (F)
b. Total Building Perimeter = 140' (P)
c. Ratio (F/P) = 1 (F/P)
d. W = Minimum width of public way = 30' (W)
e. Percent of frontage increase I = 100 [F/P-0.25] x W/30= 75 (%)

[2] Unlimited area applicable under conditions of Section 507.
[3] Maximum Building Area = total number of stories in the building x D (maximum 3 stories) (506.2).
[4] The maximum area of parking garages must comply with Table 406.5.4.
[5] Frontage increase is based on the unsprinklered area value in Table 506.2.

ALLOWABLE HEIGHT

	ALLOWABLE	SHOWN ON PLAN	CODE REFERENCE[1]
Building Height in Feet (Table 504.3)[2]	40'	12'-3"	503
Building Height in Stories (Table 504.4)	UL	1	503

[1] Provide code reference if the "Shown on Plans" quantity is not based on Table 504.3 or 504.4.
[2] The maximum height of air traffic control towers must comply with Table 412.3.1.
[3] The maximum height of open parking garages must comply with Table 406.5.4.

FIRE PROTECTION REQUIREMENTS

Life Safety Plan Sheet #, if Provided GI005

BUILDING ELEMENT	FIRE SEPARATION DISTANCE (FEET)	RATING REQ'D	RATING PROVIDED (W/_____ REDUCTION)	DETAIL # AND SHEET #	DESIGN # FOR RATED ASSEMBLY	DESIGN # FOR RATED PENETRATION	DESIGN # FOR RATED JOINTS
Structural Frame including columns, girders, trusses	>30 Ft	0	0	N/A	N/A	N/A	N/A
Bearing walls		0	0	N/A	N/A	N/A	N/A
Exterior		0	0	N/A	N/A	N/A	N/A
North	>30 Ft	0	0	N/A	N/A	N/A	N/A
East	>30 Ft	0	0	N/A	N/A	N/A	N/A
West	>30 Ft	0	0	N/A	N/A	N/A	N/A
South	>30 Ft	0	0	N/A	N/A	N/A	N/A
Interior	>30 Ft	0	0	N/A	N/A	N/A	N/A
Nonbearing walls and partitions							
Exterior							
North	>30 Ft	0	0	N/A	N/A	N/A	N/A
East	>30 Ft	0	0	N/A	N/A	N/A	N/A
West	>30 Ft	0	0	N/A	N/A	N/A	N/A
South	>30 Ft	0	0	N/A	N/A	N/A	N/A
Interior							
Floor construction Including supporting beams and joists	N/A	N/A	N/A	N/A	N/A	N/A	N/A
Floor Ceiling Assembly	N/A	N/A	N/A	N/A	N/A	N/A	N/A
Columns Supporting Floors	N/A	N/A	N/A	N/A	N/A	N/A	N/A
Roof Construction Including supporting beams and joists	N/A	N/A	N/A	N/A	N/A	N/A	N/A
Roof Ceiling Assembly	N/A	N/A	N/A	N/A	N/A	N/A	N/A
Columns Supporting Roof	N/A	N/A	N/A	N/A	N/A	N/A	N/A
Shaft Enclosures- Exit	N/A	N/A	N/A	N/A	N/A	N/A	N/A
Shaft Enclosures- Other	N/A	N/A	N/A	N/A	N/A	N/A	N/A
Corridor Separation	N/A	N/A	N/A	N/A	N/A	N/A	N/A
Occupancy/Fire Barrier Separation	N/A	N/A	N/A	N/A	N/A	N/A	N/A
Fire Area Separation	N/A	N/A	N/A	N/A	N/A	N/A	N/A
Smoke Barrier Separation	N/A	N/A	N/A	N/A	N/A	N/A	N/A
Smoke Partition	N/A	N/A	N/A	N/A	N/A	N/A	N/A
Tenant/Dwell. Unit/ Sleeping Unit Separation	N/A	N/A	N/A	N/A	N/A	N/A	N/A
Incidental Use Separation	N/A	N/A	N/A	N/A	N/A	N/A	N/A

PERCENTAGE OF WALL OPENING CALCULATIONS

FIRE SEPARATION DISTANCE (FEET FROM PROPERTY LINES)	DEGREE OF OPENINGS PROTECTION (TABLE 705.8)	ALLOWABLE AREA (%)	ACTUAL SHOWN ON PLANS (%)

LIFE SAFETY SYSTEM REQUIREMENTS

Emergency Lighting: [ ] No [X] Yes
Exit Signs: [ ] No [X] Yes
Fire Alarm system: [X] No [ ] Yes
Smoke Detection Systems: [X] No [ ] Yes [ ] Partial
Carbon Monoxide Detection: [X] No [ ] Yes

LIFE SAFETY PLAN REQUIREMENTS

Life Safety Plan Sheet # GI005

[ ] Fire and/or smoke rated wall locations (Chapter 7)
[ ] Assumed and real property line locations (if not on the site plan)
[ ] Exterior wall opening area with respect to distance to assumed property lines (705.8)
[X] Occupancy Use for each area as it relates to occupant load calculations (Table 1004.1.2)
[X] Occupant loads for each area
[X] Exit access travel distances (1017)
[X] Common path of travel distances (Tables 1006.2.1 and 1006.3.2(1))
[X] Dead-end lengths (1020.4)
[X] Clear exit widths for each exit door
[X] Maximum calculated occupant load capacity each exit door can accommodate based on egress width (1005.3)
[X] Actual occupant load for each exit door
[ ] A separate schematic plan indicating where fire rated floor/ceiling and/or roof structure is provided for purposes of occupancy separation
[ ] Location of doors with panic hardware (1010.1.10)
[ ] Location of doors with delayed egress locks and the amount of delay (1010.1.9.7)
[ ] Location of doors with electromagnetic egress locks (1010.1.9.9)
[ ] Location of doors equipped with hold-open devices
[ ] Location of emergency escape windows (1030)
[ ] The square footage of each fire area (202)
[ ] The square footage of each smoke compartment for Occupancy Classification I-2 (407.5)
[ ] Note any code exceptions or table notes that may have been utilized regarding the items above

ACCESSIBLE DWELLING UNITS (SECTION 1107) (NOT APPLICABLE)

TOTAL UNITS	ACCESSIBLE UNITS REQUIRED	ACCESSIBLE UNITS PROVIDED	TYPE A UNITS REQUIRED	TYPE A UNITS PROVIDED	TYPE B UNITS REQUIRED	TYPE B UNITS PROVIDED	TOTAL ACCESSIBLE UNITS PROVIDED

ACCESSIBLE PARKING (SECTION 1106) (NOT APPLICABLE)

LOT OR PARKING AREA	TOTAL # OF PARKING SPACES		# OF ACCESSIBLE SPACES PROVIDED			TOTAL # ACCESSIBLE PROVIDED
	REQUIRED	PROVIDED	REGULAR WITH 5' ACCESS AISLE	VAN SPACES WITH 132" ACCESS AISLE	VAN SPACES WITH 8' ACCESS AISLE	
TOTAL						

PLUMBING FIXTURE REQUIREMENT (TABLE 2902.1) (61 TOTAL BUILDING OCCUPANTS)

USE		WATERCLOSETS			URINALS	LAVATORIES			SHOWERS/ TUBS	DRINKING FOUNTAINS	
		MALE	FEMALE	UNISEX		MALE	FEMALE	UNISEX		REGULAR	ACCESSIBLE
SPACE	EXISTING										
	NEW	1	1			1	1				1
	REQUIRED	1	1			1	1				1

SPECIAL APPROVALS (NOT APPLICABLE)

Special Approval: (Local Jurisdiction, Department of Insurance, OSC, DPI, DHHS, etc., describe below)

ENERGY SUMMARY

Energy Requirements:
The following data shall be considered minimum and any special attribute required to meet the energy code shall also be provided. Each Designer shall furnish the required portions of the project information for the plan data sheet. If performance method, state the annual energy cost for the standard reference design vs annual energy cost for the proposed design.

Existing building envelope complies with code: [ ] No [ ] Yes (The remainder of this section is not applicable)

Exempt Building: [X] No [ ] Yes (Provide code or statutory reference):_____

Climate Zone: [X] 3A [ ] 4A [ ] 5A

Method of Compliance: Energy Code [ ] Performance [X] Prescriptive
ASHRAE 90.1 [ ] Performance [X] Prescriptive
(If "other" specify source here)_____

THERMAL ENVELOPE (Prescriptive method only)

Roof/ceiling Assembly (each assembly) STANDING SEAM METAL ROOF, VAPOR BARRIER, 1/2" SHEATHING, R-38 BATT INSULATION. WOOD FRAMING, GYPSUM BOARD CEILING.
Description of assembly
U-Value of total assembly 0.026
R-Value of insulation 38
Skylights in each assembly N/A
U-Value of skylight
Total square footage of skylights in each assembly

Exterior Walls (each assembly) EXTERIOR METAL SIDING, VAPOR BARRIER, 2" POLYISOCYANURATE INSULATION, 8" REINFORCED CMU MASONRY.
Description of assembly:
U-Value of total assembly: 0.07
R-Value of insulation 13
Openings (windows or doors with glazing)
U-Value of assembly: 0.60
Solar heat gain coefficient: 0.25
Projection factor: 0.15
Door R-Values: 1.3

Walls below grade (each assembly)
Description of assembly:
U-Value of total assembly: N/A
R-Value of insulation

Floors over unconditioned space (each assembly)
Description of assembly:
U-Value of total assembly: N/A
R-Value of insulation

Floors slab on grade (each assembly)
Description of assembly: TILE FLOORING, 4" CONCRETE SLAB
U-Value of total assembly: 1.19
R-Value of insulation N/A
Horizontal/vertical requirement N/A
Slab heated N/A

STRUCTURAL DESIGN

DESIGN LOADS:

Importance Factors: Snow (I_s) 1
Seismic (I_e) 1

Live Loads: Roof 20 psf
Mezzanine _____ psf
Floor 100 psf

Ground Snow Load: 10 psf

Wind Load: Ultimate Wind Speed 132 mph (ASCE-7-10)
Exposure Catgory C

SEISMIC DESIGN CATEGORY: [ ] A [X] B [ ] C [ ] D
Provide the following Seismic Design Parameters:
Risk Category (Table 1604.5) [ ] I [X] II [ ] III [ ] IV
Spectral Response Acceleration S_S 12.9 %g S_1 6.4 %g
Site Classification (ASCE 7) [ ] A [ ] B [ ] C [X] D [ ] E [ ] F
Date Source: [X] Field Test [ ] Presumptive [ ] Historical Data
Basic Structural System [X] Bearing Wall [ ] Dual w/Special Moment Frame
[ ] Building Frame [ ] Dual w/Intermediate R/C or Special Steel
[ ] Moment Frame [ ] Inverted Pendulum
Analysis Procedure: [ ] Simplified [X] Equivalent Lateral Force [ ] Dynamic
Architectural,Mechanical,Components anchored? [ ] Yes [X] No

LATERAL DESIGN CONTROL: [ ] Earthquake [X] Wind

SOIL BEARING CAPACITY:
Field Test (provide copy of test report) 1500 psf
Presumtive Bearing capacity _____ psf
Pile size, type and capacity _____

MECHANICAL DESIGN

MECHANICAL SUMMARY

MECHANICAL SYSTEMS, SERVICE SYSTEMS AND EQUIPMENT

Thermal Zone 3A
winter dry bulb 22 degrees
summer dry bulb 92 degrees

Interior Design Conditions
winter dry bulb 65 degrees
summer dry bulb -
relative humidity -

Building Heating Load 1.2 MBH

Building Cooling Load -

Mechanical Spacing Conditioning System
Unitary Heated and ventilated spaces. Spaces are heated by electric unit heaters
description of unit
heating efficiency 100%
cooling efficiency -
size category of unit
Boiler N/A
size category. If oversized, state reason.
Chiller N/A
size category. If oversized, state reason.

List Equipment efficiencies

ELECTRICAL DESIGN

ELECTRICAL SUMMARY

ELECTRICAL SYSTEM AND EQUIPMENT

Method of Compliance: Energy Code [X] Prescriptive [ ] Performance
ASHRAE 90.1 [ ] Prescriptive [ ] Performance

Lighting Schedule (each fixture type)
lamp type required in fixture
number of lamps in fixture
ballast type used in fixture
number of ballast in fixture
total wattage per fixture
See Fixture Schedule
total interior wattage specified vs. allowed (whole building or space by space) 216 ALLOWED / 138.2 USED
total exterior wattage specified vs. allowed SEE GI003 FOR ENTIRE SITE USAGE

Additional Efficiency Package Options
When using the 2018 NCECC; not required for ASHRAE 90.1)

[ ] C406.2 More Efficient HVAC Equipment Performance
[X] C406.3 Reduced Lighting Power Density
[ ] C406.4 Enhanced Digital Lighting Controls
[ ] C406.5 On-Site Renewable Energy
[ ] C406.6 Dedicated Outdoor Air System
[ ] C406.7 Reduced Energy Use in Service Water Heating

WALKER the GROUP ARCHITECTURE incorporated
PO BOX 541, NEW BERN, NC 28563
252-636-8778

Christopher B. Walker REGISTERED SEAL 15616 07/28/25 ARCHITECT NORTH CAROLINA

THE WALKER GROUP ARCHITECTURE, INCORPORATED REGISTERED ARCHITECTURAL CORPORATION CERT. NO. 51132 NORTH CAROLINA NEW BERN, NC

CRAVEN COMMUNITY COLLEGE- PUBLIC SAFETY TRAINING CENTER

525 Executive Pkwy
New Bern, NC 28562

Bid Documents

SCO # 24-27879-01A

No.	Date	Revisions

Project Number 2407.SAFE
Date 07/28/25
Drawn Author
Checked Checker
Scale AS NOTED
Drawing Title

REHAB BLDG - CODE ANALYSIS

Sheet Number
4 Of 158

Drawing Number
GI004

2018 APPENDIX B
BUILDING CODE SUMMARY FOR ALL COMMERCIAL PROJECTS
MODULAR CLASSROOM BUILDING

Name of Project:_ Craven Community College Public Safety Training Center - Modular Classroom Building

Address:_525 Executive Parkway New Bern, NC_ Zip Code: _28562

Owner or Authorized Agent:_ Chris Walker_ Phone # : 252-636-8778 Email : chris@wgarc.com

Owned By: [ ] City/County [X] Private [ ] State

Code Enforcement Jurisdiction [ ] City_____ [X] County _Craven County_ [ ] State

CONTACT

DESIGNER	FIRM	NAME	LICENSE #	TELEPHONE #	EMAIL
Architectural	The Walker Group Architecture, Inc.	Chris Walker	15616	252-636-8778	chris@wgarc.com
Civil	Avolis Engineering	John Kevin Avolis	15738	252-633-0068	avolisengineering@embarqmail.com
Electrical	PACE Collaborative	Keyen Mears	053623	757-499-4223	keyen@pace-pme.com
Fire Alarm					
Plumbing	PACE Collaborative	Tim Hahn	046553	757-499-4223	tim@pace-pme.com
Mechanical	PACE Collaborative	Tim Hahn	046553	757-499-4223	tim@pace-pme.com
Sprinkler-Standpipe:					
Structural	NRW Engineering	Kevin Roomsburg	022830	757-474-0612	kmr@nrwengineering.com
Retaining Walls > 5' High					
Other					

("Other" should include firms and individuals such as truss, precast, pre-engineered, interior designers, etc.)

2018 NC BUILDING CODE: [X] New Building [ ] Addition [ ] Renovation
[ ] 1st Time Interior Completion
[ ] Shell/Core - Contact the local inspection jurisdiction for possible additional procedures and requirements.
[ ] Phased Construction- Shell/Core - Contact the local inspection jurisdiction for possible additional procedures and requirements

2015 NC EXISTING BUILDING CODE: [ ] Prescriptive [ ] Repair [ ] Chapter 14
[ ] Level I [ ] Level II [ ] Level III
[ ] Historic Property [ ] Change of Use

CONSTRUCTED: (date)_____ **CURRENT OCCUPANCY(S): (Ch.3):**_____

RENOVATED: (date)_____ **PROPOSED OCCUPANCY(S): (Ch.3):** (B) Business

RISK CATEGORY: **(Table 1604.5)** Current: [ ] I [ ] II [ ] III [ ] IV
Proposed: [ ] I [X] II [ ] III [ ] IV

BASIC BUILDING DATA

Construction Type: (Check all that apply) [ ] I-A [ ] II-A [ ] III-A [ ] IV [ ] V-A
[ ] I-B [ ] II-B [ ] III-B [X] V-B

Sprinkler: [X] No [ ] Partial [ ] Yes [ ] NFPA 13 [ ] NFPA 13R [ ] NFPA 13D

Standpipes: [X] No [ ] Yes Class [ ] I [ ] II [ ] III [ ] Wet [ ] Dry

Fire District: [X] No [ ] Yes **Flood Hazard Area:** [X] No [ ] Yes

Special Inspections Required: [X] No [ ] Yes (Contact the local inspection jurisdiction for additional peocedures and requirements.)

Gross Building Area Table

FLOOR	EXISTING (SQ.FT)	NEW (SQ.FT)	SUBTOTAL
Roof			
4th Floor			
3rd Floor/Attic			
2nd Floor			
1st Floor		2460 SF	2460 SF
TOTAL			2460 SF

ALLOWABLE AREA

Primary Occupancy Classifications(s):

Assembly [ ] A-1 [ ] A-2 [ ] A-3 [ ] A-4 [ ] A-5
Business [X]
Educational [ ]
Factory [ ] F-1 Moderate [ ] F-1 Low
Hazardous [ ] H-1 Detonate [ ] H-2 Deflagrate [ ] H-3 Combust [ ] H-4 Health [ ] H-5 HPM
Institutional [ ] I-1 Condition [ ] 1 [ ] 2
[ ] I-2 Condition [ ] 1 [ ] 2
[ ] I-3 Condition [ ] 1 [ ] 2
[ ] I-4
Mercantile [ ]
Residential [ ] R-1 [ ] R-2 [ ] R-3 [ ] R-4
Storage [ ] S-1 Moderate [ ] S-2 Low [ ] High-Piled
[ ] Parking Garage [ ] Open [ ] Enclosed [ ] Repair Garage
Utility & Miscellaneous [ ]

Accessory Occupancy Classifications(s):_____

Incidental Uses (Table 509):_____

Special Uses (Chapter 4- List Code Sections):_____

Special Provisions (Chapter 5- List Code Sections):_____

Mixed Occupancy: [X] No [ ] Yes Separation_____0_____ Hr. Exception:_____

[ ] Non-Separated Use (508.3) - The required type of construction for the building shall be determined by applying the height and area limitations for each of the applicable occupancies to the entire building. The most restrictive type of construction, so determined, shall apply to the entire building.

[ ] Separated Use (302.3.2) - See below for area calculations for each story, the area of the occupancy shall be such that the sum of the ratios of the actual floor area of each use divided by the allowable floor area for each use shall not exceed 1.

$$\frac{\text{Actual Area of Occupancy A}}{\text{Allowable Area of Occupancy A}} + \frac{\text{Actual Area of Occupancy B}}{\text{Allowable Area of Occupancy B}} \leq 1$$

_____ + _____ = _____ ≤1.00

STORY NO.	DESCRIP. & USE	(A) BLDG. AREA PER STORY (ACTUAL)	(B) TABLE 506.2[4] AREA	(C) AREA FOR FRONTAGE INCREASE[1,2]	(D) ALLOWABLE AREA PER STORY OR UNLIMITED[3,5]
1st Floor	Business (B)	2460 SF	9000 SF	6750 SF	15,750 SF

[1] Frontage area increases from Section 506.3 are computed thus:
a. Perimeter which fronts a public way or open space having 20 feet minimum width= 147' (F)
b. Total Building Perimeter = 147' (P)
c. Ratio (F/P) = 1 (F/P)
d. W = Minimum width of public way = 30' (W)
e. Percent of frontage increase I = 100 [F/P-0.25] x W/30= 75 (%)
[2] Unlimited area applicable under conditions of Section 507.
[3] Maximum Building Area = total number of stories in the building x D (maximum 3 stories) (506.2).
[4] The maximum area of parking garages must comply with Table 406.5.4.
[5] Frontage increase is based on the unsprinklered area value in Table 506.2.

ALLOWABLE HEIGHT

	ALLOWABLE	SHOWN ON PLAN	CODE REFERENCE[1]
Building Height in Feet (Table 504.3)[2]	40'	15'-0"	503
Building Height in Stories (Table 504.4)	UL	1	503

[1] Provide code reference if the "Shown on Plans" quantity is not based on Table 504.3 or 504.4.
[2] The maximum height of air traffic control towers must comply with Table 412.3.1.
[3] The maximum height of open parking garages must comply with Table 406.5.4.

FIRE PROTECTION REQUIREMENTS

Life Safety Plan Sheet #, if Provided GI009

BUILDING ELEMENT	FIRE SEPARATION DISTANCE (FEET)	RATING REQ'D	RATING PROVIDED (W/_____ REDUCTION)	DETAIL # AND SHEET #	DESIGN # FOR RATED ASSEMBLY	DESIGN # FOR RATED PENETRATION	DESIGN # FOR RATED JOINTS
Structural Frame including columns, girders, trusses	>30 Ft	0	0	N/A	N/A	N/A	N/A
Bearing walls		0	0	N/A	N/A	N/A	N/A
Exterior		0	0	N/A	N/A	N/A	N/A
North	>30 Ft	0	0	N/A	N/A	N/A	N/A
East	>30 Ft	0	0	N/A	N/A	N/A	N/A
West	>30 Ft	0	0	N/A	N/A	N/A	N/A
South	>30 Ft	0	0	N/A	N/A	N/A	N/A
Interior	>30 Ft	0	0	N/A	N/A	N/A	N/A
Nonbearing walls and partitions							
Exterior							
North	>30 Ft	0	0	N/A	N/A	N/A	N/A
East	>30 Ft	0	0	N/A	N/A	N/A	N/A
West	>30 Ft	0	0	N/A	N/A	N/A	N/A
South	>30 Ft	0	0	N/A	N/A	N/A	N/A
Interior							
Floor construction Including supporting beams and joists	N/A	N/A	N/A	N/A	N/A	N/A	N/A
Floor Ceiling Assembly	N/A	N/A	N/A	N/A	N/A	N/A	N/A
Columns Supporting Floors	N/A	N/A	N/A	N/A	N/A	N/A	N/A
Roof Construction Including supporting beams and joists	N/A	N/A	N/A	N/A	N/A	N/A	N/A
Roof Ceiling Assembly	N/A	N/A	N/A	N/A	N/A	N/A	N/A
Columns Supporting Roof	N/A	N/A	N/A	N/A	N/A	N/A	N/A
Shaft Enclosures- Exit	N/A	N/A	N/A	N/A	N/A	N/A	N/A
Shaft Enclosures- Other	N/A	N/A	N/A	N/A	N/A	N/A	N/A
Corridor Separation	N/A	N/A	N/A	N/A	N/A	N/A	N/A
Occupancy/Fire Barrier Separation	N/A	N/A	N/A	N/A	N/A	N/A	N/A
Fire Area Separation	N/A	N/A	N/A	N/A	N/A	N/A	N/A
Smoke Barrier Separation	N/A	N/A	N/A	N/A	N/A	N/A	N/A
Smoke Partition	N/A	N/A	N/A	N/A	N/A	N/A	N/A
Tenant/Dwell. Unit/ Sleeping Unit Separation	N/A	N/A	N/A	N/A	N/A	N/A	N/A
Incidental Use Separation	N/A	N/A	N/A	N/A	N/A	N/A	N/A

PERCENTAGE OF WALL OPENING CALCULATIONS

FIRE SEPARATION DISTANCE (FEET FROM PROPERTY LINES)	DEGREE OF OPENINGS PROTECTION (TABLE 705.8)	ALLOWABLE AREA (%)	ACTUAL SHOWN ON PLANS (%)

LIFE SAFETY SYSTEM REQUIREMENTS

Emergency Lighting: [ ] No [X] Yes
Exit Signs: [ ] No [X] Yes
Fire Alarm system: [X] No [ ] Yes
Smoke Detection Systems: [X] No [ ] Yes [ ] Partial_____
Carbon Monoxide Detection: [X] No [ ] Yes

LIFE SAFETY PLAN REQUIREMENTS

Life Safety Plan Sheet # GI009

[ ] Fire and/or smoke rated wall locations (Chapter 7)
[ ] Assumed and real property line locations (if not on the site plan)
[ ] Exterior wall opening area with respect to distance to assumed property lines (705.8)
[X] Occupancy Use for each area as it relates to occupant load calculations (Table 1004.1.2)
[X] Occupant loads for each area
[X] Exit access travel distances (1017)
[X] Common path of travel distances (Tables 1006.2.1 and 1006.3.2(1))
[X] Dead-end lengths (1020.4)
[X] Clear exit widths for each exit door
[X] Maximum calculated occupant load capacity each exit door can accommodate based on egress width (1005.3)
[X] Actual occupant load for each exit door
[ ] A separate schematic plan indicating where fire rated floor/ceiling and/or roof structure is provided for purposes of occupancy separation
[ ] Location of doors with panic hardware (1010.1.10)
[ ] Location of doors with delayed egress locks and the amount of delay (1010.1.9.7)
[ ] Location of doors with electromagnetic egress locks (1010.1.9.9)
[ ] Location of doors equipped with hold-open devices
[ ] Location of emergency escape windows (1030)
[ ] The square footage of each fire area (202)
[ ] The square footage of each smoke compartment for Occupancy Classification I-2 (407.5)
[ ] Note any code exceptions or table notes that may have been utilized regarding the items above

ACCESSIBLE DWELLING UNITS (SECTION 1107) (NOT APPLICABLE)

TOTAL UNITS	ACCESSIBLE UNITS REQUIRED	ACCESSIBLE UNITS PROVIDED	TYPE A UNITS REQUIRED	TYPE A UNITS PROVIDED	TYPE B UNITS REQUIRED	TYPE B UNITS PROVIDED	TOTAL ACCESSIBLE UNITS PROVIDED

ACCESSIBLE PARKING (SECTION 1106)

LOT OR PARKING AREA	TOTAL # OF PARKING SPACES		# OF ACCESSIBLE SPACES PROVIDED			TOTAL # ACCESSIBLE PROVIDED
	REQUIRED	PROVIDED	REGULAR WITH 5' ACCESS AISLE	VAN SPACES WITH 132" ACCESS AISLE	VAN SPACES WITH 8' ACCESS AISLE	
TOTAL	53	58	2			2

PLUMBING FIXTURE REQUIREMENT (TABLE 2902.1) (77 TOTAL BUILDING OCCUPANTS)

USE		WATERCLOSETS			URINALS	LAVATORIES			SHOWERS/ TUBS	DRINKING FOUNTAINS	
		MALE	FEMALE	UNISEX		MALE	FEMALE	UNISEX		REGULAR	ACCESSIBLE
SPACE	EXISTING										
	NEW	1	2	1	1	1	1	1			1
	REQUIRED	1	1			1	1				1

SPECIAL APPROVALS

Special Approval: (Local Jurisdiction, Department of Insurance, OSC, DPI, DHHS, etc., describe below)

STATE CONSTRUCTION OFFICE ELECTRICAL AND FINAL INSPECTIONS

ENERGY SUMMARY (MODULAR ENVELOPE AND ENERGY DESIGN BY MANUFACTURER)

Energy Requirements:
The following data shall be considered minimum and any special attribute required to meet the energy code shall also be provided. Each Designer shall furnish the required portions of the project information for the plan data sheet. If performance method, state the annual energy cost for the standard reference design vs annual energy cost for the proposed design.

Existing building envelope complies with code: [ ] No [ ] Yes (The remainder of this section is not applicable)

Excempt Building: [ ] No [ ] Yes (Provide code or statutory reference):_____

Climate Zone: [ ] 3A [ ] 4A [ ] 5A

Method of Compliance:
Energy Code [ ] Performance [ ] Prescriptive
ASHRAE 90.1 [ ] Performance [ ] Prescriptive
(If "other" specify source here)_____

THERMAL ENVELOPE (Prescriptive method only)

Roof/ceiling Assembly (each assembly)
Description of assembly
U-Value of total assembly
R-Value of insulation
Skylights in each assembly
U-Value of skylight
Total square footage of skylights in each assembly

Exterior Walls (each assembly)
Description of assembly:
U-Value of total assembly:
R-Value of insulation
Openings (windows or doors with glazing)
U-Value of assembly:
Solar heat gain coefficient:
Projection factor:
Door R-Values:

Walls below grade (each assembly)
Description of assembly:
U-Value of total assembly:
R-Value of insulation

Floors over unconditioned space (each assembly)
Description of assembly:
U-Value of total assembly:
R-Value of insulation

Floors slab on grade (each assembly)
Description of assembly:
U-Value of total assembly:
R-Value of insulation
Horizontal/vertical requirement
Slab heated

STRUCTURAL DESIGN (MODULAR STRUCTURAL DESIGN BY MANUFACTURER)

DESIGN LOADS:

Importance Factors: Snow (I_s) _____ Seismic (I_e) _____

Live Loads: Roof _____ psf
Mezzanine _____ psf
Floor _____ psf

Ground Snow Load: _____ psf

Wind Load: Ultimate Wind Speed 132 mph (ASCE-7-10)
Exposure Catgory C

SEISMIC DESIGN CATEGORY: [ ] A [ ] B [ ] C [ ] D
Provide the following Seismic Design Parameters:
Risk Category (Table 1604.5) [ ] I [ ] II [ ] III [ ] IV
Spectral Response Acceleration S_S _____%g S_1 _____%g
Site Classification (ASCE 7) [ ] A [ ] B [ ] C [ ] D [ ] E [ ] F
Date Source: [ ] Field Test [ ] Presumptive [ ] Historical Data
Basic Structural System [ ] Bearing Wall [ ] Building Frame [ ] Moment Frame [ ] Dual w/Special Moment Frame [ ] Dual w/Intermediate R/C or Special Steel [ ] Inverted Pendulum
Analysis Procedure: [ ] Simplified [ ] Equivalent Lateral Force [ ] Dynamic
Architectural,Mechanical,Components anchored? [ ] Yes [ ] No

LATERAL DESIGN CONTROL: [ ] Earthquake [ ] Wind

SOIL BEARING CAPACITY:
Field Test (provide copy of test report) 1500 psf
Presumitve Bearing capacity _____ psf
Pile size, type and capacity _____

MECHANICAL DESIGN (MODULAR MECHANICAL DESIGN BY MANUFACTURER)

MECHANICAL SUMMARY

MECHANICAL SYSTEMS, SERVICE SYSTEMS AND EQUIPMENT

Thermal Zone
winter dry bulb
summer dry bulb

Interior Design Conditions
winter dry bulb
summer dry bulb
relative humidity

Building Heating Load

Building Cooling Load

Mechanical Spacing Conditioning System
Unitary
description of unit
heating efficiency
cooling efficiency
size category of unit
Boiler
size category. If oversized, state reason.
Chiller
size category. If oversized, state reason.

List Equipment efficiencies

ELECTRICAL DESIGN (MODULAR ELECTRICAL DESIGN BY MANUFACTURER)

ELECTRICAL SUMMARY

ELECTRICAL SYSTEM AND EQUIPMENT

Method of Compliance:
Energy Code [ ] Prescriptive [ ] Performance
ASHRAE 90.1 [ ] Prescriptive [ ] Performance

Lighting Schedule (each fixture type)
lamp type required in fixture
number of lamps in fixture
ballast type used in fixture
number of ballast in fixture
total wattage per fixture
total interior wattage specified vs. allowed (whole building or space by space)
total exterior wattage specified vs. allowed

Additional Efficiency Package Options
When using the 2018 NCECC; not required for ASHRAE 90.1)
[ ] C406.2 More Efficient HVAC Equipment Performance
[ ] C406.3 Reduced Lighting Power Density
[ ] C406.4 Enhanced Digital Lighting Controls
[ ] C406.5 On-Site Renewable Energy
[ ] C406.6 Dedicated Outdoor Air System
[ ] C406.7 Reduced Energy Use in Service Water Heating

WALKER the GROUP ARCHITECTURE incorporated
PO BOX 541, NEW BERN, NC 28563
252-636-8778

Christopher B. Walker REGISTERED SEAL 15616 07/28/25 ARCHITECT NORTH CAROLINA

THE WALKER GROUP ARCHITECTURE, INCORPORATED REGISTERED ARCHITECTURAL CORPORATION CERT. NO. 51132 NORTH CAROLINA NEW BERN, NC

CRAVEN COMMUNITY COLLEGE- PUBLIC SAFETY TRAINING CENTER

525 Executive Pkwy New Bern, NC 28562

Bid Documents

SCO # 24-27879-01A

No.	Date	Revisions

Project Number: 2407.SAFE
Date: 07/28/25
Drawn: Author
Checked: Checker
Scale: AS NOTED

Drawing Title
MODULAR CLASSROOM BLDG - CODE ANALYSIS

Sheet Number
5 Of 158

Drawing Number
GI005

2018 APPENDIX B
BUILDING CODE SUMMARY FOR ALL COMMERCIAL PROJECTS
GATEHOUSE

Name of Project:- Craven Community College Public Safety Training Center - Gatehouse

Address:- 525 Executive Parkway New Bern, NC — Zip Code: 28562

Owner or Authorized Agent:- Chris Walker — Phone # : 252-636-8778 — Email : chris@wgarc.com

Owned By: [ ] City/County [X] Private [ ] State

Code Enforcement Jurisdiction [ ] City_____ [X] County - Craven County [X] State

CONTACT

DESIGNER	FIRM	NAME	LICENSE #	TELEPHONE #	EMAIL
Architectural	The Walker Group Architecture, Inc.	Chris Walker	15616	252-636-8778	chris@wgarc.com
Civil	Avolis Engineering	John Kevin Avolis	15738	252-633-0068	avolisengineering@embarqmail.com
Electrical	PACE Collaborative	Keyen Mears	053623	757-499-4223	keyen@pace-pme.com
Fire Alarm					
Plumbing	PACE Collaborative	Tim Hahn	046553	757-499-4223	tim@pace-pme.com
Mechanical	PACE Collaborative	Tim Hahn	046553	757-499-4223	tim@pace-pme.com
Sprinkler-Standpipe					
Structural	NRW Engineering	Kevin Roomsburg	022830	757-474-0612	kmr@nrwengineering.com
Retaining Walls > 5' High					
Other					

("Other" should include firms and individuals such as truss, precast, pre-engineered, interior designers, etc.)

2018 NC BUILDING CODE: [X] New Building [ ] Addition [ ] Renovation
[ ] 1st Time Interior Completion
[ ] Shell/Core - Contact the local inspection jurisdiction for possible additional procedures and requirements
[ ] Phased Construction- Shell/Core - Contact the local inspection jurisdiction for possible additional procedures and requirements

2015 NC EXISTING BUILDING CODE: [ ] Prescriptive [ ] Repair [ ] Chapter 14
[ ] Level I [ ] Level II [ ] Level III
[ ] Historic Property [ ] Change of Use

CONSTRUCTED: (date)_____ **CURRENT OCCUPANCY(S): (Ch.3):**_____

RENOVATED: (date)_____ **PROPOSED OCCUPANCY(S): (Ch.3):** (B) Business

RISK CATEGORY: (Table 1604.5) Current: [ ] I [ ] II [ ] III [ ] IV
Proposed: [ ] I [X] II [ ] III [ ] IV

BASIC BUILDING DATA

Construction Type: (Check all that apply) [ ] I-A [ ] II-A [ ] III-A [ ] IV [ ] V-A
[ ] I-B [ ] II-B [ ] III-B [X] V-B

Sprinkler: [X] No [ ] Partial [ ] Yes [ ] NFPA 13 [ ] NFPA 13R [ ] NFPA 13D

Standpipes: [X] No [ ] Yes Class [ ] I [ ] II [ ] III [ ] Wet [ ] Dry

Fire District: [X] No [ ] Yes **Flood Hazard Area:** [X] No [ ] Yes

Special Inspections Required: [X] No [ ] Yes (Contact the local inspection jurisdiction for additional peocedures and requirements.)

Gross Building Area Table

FLOOR	EXISTING (SQ.FT)	NEW (SQ.FT)	SUBTOTAL
Roof			
4th Floor			
3rd Floor/Attic			
2nd Floor			
1st Floor		96 SF	96 SF
TOTAL			96 SF

ALLOWABLE AREA

Primary Occupancy Classifications(s):

Assembly [ ] A-1 [ ] A-2 [ ] A-3 [ ] A-4 [ ] A-5
Business [X]
Educational [ ]
Factory [ ] F-1 Moderate [ ] F-1 Low
Hazardous [ ] H-1 Detonate [ ] H-2 Deflagrate [ ] H-3 Combust [ ] H-4 Health [ ] H-5 HPM
Institutional [ ] I-1 Condition [ ] 1 [ ] 2
[ ] I-2 Condition [ ] 1 [ ] 2
[ ] I-3 Condition [ ] 1 [ ] 2
[ ] I-4
Mercantile [ ]
Residential [ ] R-1 [ ] R-2 [ ] R-3 [ ] R-4
Storage [ ] S-1 Moderate [ ] S-2 Low [ ] High-Piled
[ ] Parking Garage [ ] Open [ ] Enclosed [ ] Repair Garage
Utility & Miscellaneous [ ]

Accessory Occupancy Classifications(s):_____

Incidental Uses (Table 509):_____

Special Uses (Chapter 4- List Code Sections):_____

Special Provisions (Chapter 5- List Code Sections):_____

Mixed Occupancy: [X] No [ ] Yes Separation 0 Hr. Exception:_____

[ ] Non-Separated Use (508.3) - The required type of construction for the building shall be determined by applying the height and area limitations for each of the applicable occupancies to the entire building. The most restrictive type of construction, so determined, shall apply to the entire building.

[ ] Separated Use (302.3.2) - See below for area calculations for each story, the area of the occupancy shall be such that the sum of the ratios of the actual floor area of each use divided by the allowable floor area for each use shall not exceed 1.

$$\frac{\text{Actual Area of Occupancy A}}{\text{Allowable Area of Occupancy A}} + \frac{\text{Actual Area of Occupancy B}}{\text{Allowable Area of Occupancy B}} \leq 1$$

$$____ + ____ = ____ \leq 1.00$$

STORY NO.	DESCRIP. & USE	(A) BLDG. AREA PER STORY (ACTUAL)	(B) TABLE 506.2[2] AREA	(C) AREA FOR FRONTAGE INCREASE[1,2]	(D) ALLOWABLE AREA PER STORY OR UNLIMITED[2,3]
1st Floor	Business (B)	96 SF	9,000 SF	6,750 SF	15,750 SF

[1] Frontage area increases from Section 506.3 are computed thus:
a. Perimeter which fronts a public way or open space having 20 feet minimum width= 40' (F)
b. Total Building Perimeter = 40' (P)
c. Ratio (F/P) = 1 (F/P)
d. W = Minimum width of public way = 30' (W)
e. Percent of frontage increase I = 100 [F/P-0.25] x W/30= 75 (%)

[2] Unlimited area applicable under conditions of Section 507.
[3] Maximum Building Area = total number of stories in the building x D (maximum 3 stories) (506.2).
[4] The maximum area of parking garages must comply with Table 406.5.4.
[5] Frontage increase is based on the unsprinklered area value in Table 506.2.

ALLOWABLE HEIGHT

	ALLOWABLE	SHOWN ON PLAN	CODE REFERENCE[1]
Building Height in Feet (Table 504.3)[2]	40'	9'-0"	503
Building Height in Stories (Table 504.4)	2	1	503

[1] Provide code reference if the "Shown on Plans" quantity is not based on Table 504.3 or 504.4.
[2] The maximum height of air traffic control towers must comply with Table 412.3.1.
[3] The maximum height of open parking garages must comply with Table 406.5.4.

FIRE PROTECTION REQUIREMENTS

Life Safety Plan Sheet #, if Provided GI005

BUILDING ELEMENT	FIRE SEPARATION DISTANCE (FEET)	RATING REQ'D	RATING PROVIDED (W/_____ REDUCTION)	DETAIL # AND SHEET #	DESIGN # FOR RATED ASSEMBLY	DESIGN # FOR RATED PENETRATION	DESIGN # FOR RATED JOINTS
Structural Frame including columns, girders, trusses	>30 Ft	0	0	N/A	N/A	N/A	N/A
Bearing walls		0	0	N/A	N/A	N/A	N/A
Exterior		0	0	N/A	N/A	N/A	N/A
North	>30 Ft	0	0	N/A	N/A	N/A	N/A
East	>30 Ft	0	0	N/A	N/A	N/A	N/A
West	>30 Ft	0	0	N/A	N/A	N/A	N/A
South	>30 Ft	0	0	N/A	N/A	N/A	N/A
Interior	>30 Ft	0	0	N/A	N/A	N/A	N/A
Nonbearing walls and partitions							
Exterior							
North	>30 Ft	0	0	N/A	N/A	N/A	N/A
East	>30 Ft	0	0	N/A	N/A	N/A	N/A
West	>30 Ft	0	0	N/A	N/A	N/A	N/A
South	>30 Ft	0	0	N/A	N/A	N/A	N/A
Interior							
Floor construction Including supporting beams and joists	N/A	N/A	N/A	N/A	N/A	N/A	N/A
Floor Ceiling Assembly	N/A	N/A	N/A	N/A	N/A	N/A	N/A
Columns Supporting Floors	N/A	N/A	N/A	N/A	N/A	N/A	N/A
Roof Construction Including supporting beams and joists	N/A	N/A	N/A	N/A	N/A	N/A	N/A
Roof Ceiling Assembly	N/A	N/A	N/A	N/A	N/A	N/A	N/A
Columns Supporting Roof	N/A	N/A	N/A	N/A	N/A	N/A	N/A
Shaft Enclosures- Exit	N/A	N/A	N/A	N/A	N/A	N/A	N/A
Shaft Enclosures- Other	N/A	N/A	N/A	N/A	N/A	N/A	N/A
Corridor Separation	N/A	N/A	N/A	N/A	N/A	N/A	N/A
Occupancy/Fire Barrier Separation	N/A	N/A	N/A	N/A	N/A	N/A	N/A
Fire Area Separation	N/A	N/A	N/A	N/A	N/A	N/A	N/A
Smoke Barrier Separation	N/A	N/A	N/A	N/A	N/A	N/A	N/A
Smoke Partition	N/A	N/A	N/A	N/A	N/A	N/A	N/A
Tenant/Dwell. Unit/ Sleeping Unit Separation	N/A	N/A	N/A	N/A	N/A	N/A	N/A
Incidental Use Separation	N/A	N/A	N/A	N/A	N/A	N/A	N/A

PERCENTAGE OF WALL OPENING CALCULATIONS

FIRE SEPARATION DISTANCE (FEET FROM PROPERTY LINES)	DEGREE OF OPENINGS PROTECTION (TABLE 705.8)	ALLOWABLE AREA (%)	ACTUAL SHOWN ON PLANS (%)

LIFE SAFETY SYSTEM REQUIREMENTS

Emergency Lighting: [ ] No [X] Yes
Exit Signs: [ ] No [X] Yes
Fire Alarm system: [X] No [ ] Yes
Smoke Detection Systems: [X] No [ ] Yes [ ] Partial_____
Carbon Monoxide Detection: [X] No [ ] Yes

LIFE SAFETY PLAN REQUIREMENTS

Life Safety Plan Sheet # GI005

[ ] Fire and/or smoke rated wall locations (Chapter 7)
[ ] Assumed and real property line locations (if not on the site plan)
[ ] Exterior wall opening area with respect to distance to assumed property lines (705.8)
[X] Occupancy Use for each area as it relates to occupant load calculations (Table 1004.1.2)
[X] Occupant loads for each area
[X] Exit access travel distances (1017)
[X] Common path of travel distances (Tables 1006.2.1 and 1006.3.2(1))
[X] Dead-end lengths (1020.4)
[X] Clear exit widths for each exit door
[X] Maximum calculated occupant load capacity each exit door can accommodate based on egress width (1005.3)
[X] Actual occupant load for each exit door
[ ] A separate schematic plan indicating where fire rated floor/ceiling and/or roof structure is provided for purposes of occupancy separation
[ ] Location of doors with panic hardware (1010.1.10)
[ ] Location of doors with delayed egress locks and the amount of delay (1010.1.9.7)
[ ] Location of doors with electromagnetic egress locks (1010.1.9.9)
[ ] Location of doors equipped with hold-open devices
[ ] Location of emergency escape windows (1030)
[ ] The square footage of each fire area (202)
[ ] The square footage of each smoke compartment for Occupancy Classification I-2 (407.5)
[ ] Note any code exceptions or table notes that may have been utilized regarding the items above

ACCESSIBLE DWELLING UNITS (SECTION 1107) (NOT APPLICABLE)

TOTAL UNITS	ACCESSIBLE UNITS REQUIRED	ACCESSIBLE UNITS PROVIDED	TYPE A UNITS REQUIRED	TYPE A UNITS PROVIDED	TYPE B UNITS REQUIRED	TYPE B UNITS PROVIDED	TOTAL ACCESSIBLE UNITS PROVIDED

ACCESSIBLE PARKING (SECTION 1106)

(ACCESSIBLE PARKING IN NEARBY PARKING LOT USED FOR MODULAR CLASSROOM & INDOOR RANGE)

LOT OR PARKING AREA	TOTAL # OF PARKING SPACES		# OF ACCESSIBLE SPACES PROVIDED			TOTAL # ACCESSIBLE PROVIDED
	REQUIRED	PROVIDED	REGULAR WITH 5' ACCESS AISLE	VAN SPACES WITH 132" ACCESS AISLE	VAN SPACES WITH 8' ACCESS AISLE	
TOTAL						

PLUMBING FIXTURE REQUIREMENT (TABLE 2902.1)

(1 OCCUPANT- NO PLUMBING IN BUILDING- NEARBY BUILDINGS HAVE BATHROOMS)

USE		WATERCLOSETS			URINALS	LAVATORIES			SHOWERS/ TUBS	DRINKING FOUNTAINS	
		MALE	FEMALE	UNISEX		MALE	FEMALE	UNISEX		REGULAR	ACCESSIBLE
SPACE	EXISTING										
	NEW										
	REQUIRED										

SPECIAL APPROVALS (NOT APPLICABLE)

Special Approval: (Local Jurisdiction, Department of Insurance, OSC, DPI, DHHS, etc., describe below)

ENERGY SUMMARY

Energy Requirements:
The following data shall be considered minimum and any special attribute required to meet the energy code shall also be provided. Each Designer shall furnish the required portions of the project information for the plan data sheet. If performance method, state the annual energy cost for the standard reference design vs annual energy cost for the proposed design.

Existing building envelope complies with code: [ ] No [ ] Yes (The remainder of this section is not applicable)

Excempt Building: [X] No [ ] Yes (Provide code or statutory reference):_____

Climate Zone: [X] 3A [ ] 4A [ ] 5A

Method of Compliance: Energy Code [ ] Performance [X] Prescriptive
ASHRAE 90.1 [ ] Performance [X] Prescriptive
(If "other" specify source here)_____

THERMAL ENVELOPE (Prescriptive method only)

Roof/ceiling Assembly (each assembly) ASPHALT SHINGLE ROOF, VAPOR BARRIER, 1/2" SHEATHING, R-38 BATT INSULATION. WOOD FRAMING, GYPSUM BOARD CEILING.
Description of assembly
U-Value of total assembly 0.026
R-Value of insulation 38
Skylights in each assembly N/A
U-Value of skylight
Total square footage of skylights in each assembly

Exterior Walls (each assembly) EXTERIOR VINYL SIDING, VAPOR BARRIER, WOOD STUDS, R-19 BATT INSULATION
Description of assembly:
U-Value of total assembly: 0.05
R-Value of insulation 19
Openings (windows or doors with glazing)
U-Value of assembly: 0.60
Solar heat gain coefficient: 0.25
Projection factor: 0.15
Door R-Values: 1.3

Walls below grade (each assembly)
Description of assembly: N/A
U-Value of total assembly:
R-Value of insulation

Floors over unconditioned space (each assembly)
Description of assembly:
U-Value of total assembly: N/A
R-Value of insulation

Floors slab on grade (each assembly)
Description of assembly: TILE FLOORING, WOOD JOIST, R-19 INSULATION, 4" CONCRETE SLAB
U-Value of total assembly: 0.05
R-Value of insulation N/A
Horizontal/vertical requirement N/A
Slab heated N/A

STRUCTURAL DESIGN

DESIGN LOADS:

Importance Factors: Snow (I_s) 1 Seismic (I_E) 1

Live Loads: Roof 20 psf
Mezzanine _____ psf
Floor 100 psf

Ground Snow Load: 10 psf

Wind Load: Ultimate Wind Speed 132 mph (ASCE-7-10)
Exposure Catgory C

SEISMIC DESIGN CATEGORY: [ ] A [X] B [ ] C [ ] D
Provide the following Seismic Design Parameters:
Risk Category (Table 1604.5) [ ] I [X] II [ ] III [ ] IV
Spectral Response Acceleration S_S 12.9 %g S_1 6.4 %g
Site Classification (ASCE 7) [ ] A [ ] B [ ] C [X] D [ ] E [ ] F
Date Source: [X] Field Test [ ] Presumptive [ ] Historical Data
Basic Structural System [X] Bearing Wall [ ] Dual w/Special Moment Frame
[ ] Building Frame [ ] Dual w/Intermediate R/C or Special Steel
[ ] Moment Frame [ ] Inverted Pendulum
Analysis Procedure: [ ] Simplified [X] Equivalent Lateral Force [ ] Dynamic
Architectural,Mechanical,Components anchored? [ ] Yes [X] No

LATERAL DESIGN CONTROL: [ ] Earthquake [X] Wind

SOIL BEARING CAPACITY:
Field Test (provide copy of test report) 1500 psf
Presumtive Bearing capacity _____ psf
Pile size, type and capacity _____

MECHANICAL DESIGN

MECHANICAL SUMMARY

MECHANICAL SYSTEMS, SERVICE SYSTEMS AND EQUIPMENT

Thermal Zone 3A
winter dry bulb 22 degrees
summer dry bulb 92 degrees

Interior Design Conditions
winter dry bulb 70 degrees
summer dry bulb 75 degrees
relative humidity 50%

Building Heating Load 2.9 MBH

Building Cooling Load 7.2 MBH

Mechanical Spacing Conditioning System
Unitary Ductless split system heat pump
description of unit
heating efficiency 9.2 HSPF2
cooling efficiency 20.2 SEER 2
size category of unit 18 MBH
Boiler N/A
size category. If oversized, state reason.
Chiller N/A
size category. If oversized, state reason.

List Equipment efficiencies

ELECTRICAL DESIGN

ELECTRICAL SUMMARY

ELECTRICAL SYSTEM AND EQUIPMENT

Method of Compliance: Energy Code [X] Prescriptive [ ] Performance
ASHRAE 90.1 [ ] Prescriptive [ ] Performance

Lighting Schedule (each fixture type)
lamp type required in fixture
number of lamps in fixture
ballast type used in fixture
number of ballast in fixture
total wattage per fixture
See Fixture Schedule
total interior wattage specified vs. allowed (whole building or space by space) 70 ALLOWED / 18 USED
total exterior wattage specified vs. allowed

Additional Efficiency Package Options
When using the 2018 NCECC; not required for ASHRAE 90.1)

[ ] C406.2 More Efficient HVAC Equipment Performance
[X] C406.3 Reduced Lighting Power Density
[ ] C406.4 Enhanced Digital Lighting Controls
[ ] C406.5 On-Site Renewable Energy
[ ] C406.6 Dedicated Outdoor Air System
[ ] C406.7 Reduced Energy Use in Service Water Heating

the WALKER GROUP ARCHITECTURE incorporated
PO BOX 541, NEW BERN, NC 28563
252-636-8778

Christopher B. Walker REGISTERED SEAL 15616 07/28/25 ARCHITECT NORTH CAROLINA

THE WALKER GROUP ARCHITECTURE, INCORPORATED REGISTERED ARCHITECTURAL CORPORATION CERT. NO. 51132 NORTH CAROLINA NEW BERN, NC

CRAVEN COMMUNITY COLLEGE- PUBLIC SAFETY TRAINING CENTER

525 Executive Pkwy
New Bern, NC 28562

Bid Documents

SCO # 24-27879-01A

No.	Date	Revisions

Project Number: 2407.SAFE
Date: 07/28/25
Drawn: Author
Checked: Checker
Scale: AS NOTED
Drawing Title: GATEHOUSE - CODE ANALYSIS

Sheet Number: 6 Of 158
Drawing Number: GI006

2018 APPENDIX B
BUILDING CODE SUMMARY FOR ALL COMMERCIAL PROJECTS
DRILL/BURN TOWER

Name of Project:- Craven Community College Public Safety Training Center - Drill/Burn Tower

Address:- 525 Executive Parkway New Bern, NC — Zip Code: 28562

Owner or Authorized Agent:- Chris Walker — Phone # : 252-636-8778 — Email : chris@wgarc.com

Owned By: [ ] City/County [X] Private [ ] State

Code Enforcement Jurisdiction: [ ] City_____ [X] County - Craven County [X] State

CONTACT

DESIGNER	FIRM	NAME	LICENSE #	TELEPHONE #	EMAIL
Architectural	The Walker Group Architecture, Inc.	Chris Walker	15616	252-636-8778	chris@wgarc.com
Civil	Avolis Engineering	John Kevin Avolis	15738	252-633-0068	avolisengineering@embarqmail.com
Electrical	PACE Collaborative	Keyen Mears	053623	757-499-4223	keyen@pace-pme.com
Fire Alarm					
Plumbing	PACE Collaborative	Tim Hahn	046553	757-499-4223	tim@pace-pme.com
Mechanical	PACE Collaborative	Tim Hahn	046553	757-499-4223	tim@pace-pme.com
Sprinkler-Standpipe:-					
Structural	NRW Engineering	Kevin Roomsburg	022830	757-474-0612	kmr@nrwengineering.com
Retaining Walls > 5' High					
Other					

("Other" should include firms and individuals such as truss, precast, pre-engineered, interior designers, etc.)

2018 NC BUILDING CODE: [X] New Building [ ] Addition [ ] Renovation
[ ] 1st Time Interior Completion
[ ] Shell/Core - Contact the local inspection jurisdiction for possible additional procedures and requirements.
[ ] Phased Construction- Shell/Core - Contact the local inspection jurisdiction for possible additional procedures and requirements

2015 NC EXISTING BUILDING CODE: [ ] Prescriptive [ ] Repair [ ] Chapter 14
[ ] Level I [ ] Level II [ ] Level III
[ ] Historic Property [ ] Change of Use

CONSTRUCTED: (date)_____ **CURRENT OCCUPANCY(S): (Ch.3):**_____

RENOVATED: (date)_____ **PROPOSED OCCUPANCY(S): (Ch.3):** (U) Utility

RISK CATEGORY: **(Table 1604.5)** Current: [ ] I [ ] II [ ] III [ ] IV
Proposed: [ ] I [X] II [ ] III [ ] IV

BASIC BUILDING DATA

Construction Type: (Check all that apply) [ ] I-A [ ] II-A [ ] III-A [ ] IV [ ] V-A
[ ] I-B [X] II-B [ ] III-B [ ] V-B

Sprinkler: [X] No [ ] Partial [ ] Yes [ ] NFPA 13 [ ] NFPA 13R [ ] NFPA 13D

Standpipes: [X] No [ ] Yes Class [ ] I [ ] II [ ] III [ ] Wet [ ] Dry

Fire District: [X] No [ ] Yes **Flood Hazard Area:** [X] No [ ] Yes

Special Inspections Required: [X] No [ ] Yes (Contact the local inspection jurisdiction for additional peocedures and requirements.)

Gross Building Area Table

FLOOR	EXISTING (SQ.FT)	NEW (SQ.FT)	SUBTOTAL
Roof			
4th Floor		480 SF	480 SF
3rd Floor/Attic		480 SF	480 SF
2nd Floor		1565 SF	1565 SF
1st Floor		1565 SF	1565 SF
TOTAL			4,090 SF

ALLOWABLE AREA

Primary Occupancy Classifications(s):

Assembly [ ] A-1 [ ] A-2 [ ] A-3 [ ] A-4 [ ] A-5
Business [ ]
Educational [ ]
Factory [ ] F-1 Moderate [ ] F-1 Low
Hazardous [ ] H-1 Detonate [ ] H-2 Deflagrate [ ] H-3 Combust [ ] H-4 Health [ ] H-5 HPM
Institutional [ ] I-1 Condition [ ] 1 [ ] 2
[ ] I-2 Condition [ ] 1 [ ] 2
[ ] I-3 Condition [ ] 1 [ ] 2
[ ] I-4
Mercantile [ ]
Residential [ ] R-1 [ ] R-2 [ ] R-3 [ ] R-4
Storage [ ] S-1 Moderate [ ] S-2 Low [ ] High-Piled
[ ] Parking Garage [ ] Open [ ] Enclosed [ ] Repair Garage
Utility & Miscellaneous [X]

Accessory Occupancy Classifications(s):_____

Incidental Uses (Table 509):_____

Special Uses (Chapter 4- List Code Sections):_____

Special Provisions (Chapter 5- List Code Sections):_____

Mixed Occupancy: [X] No [ ] Yes Separation 0 Hr. Exception:_____

[ ] Non-Separated Use (508.3) - The required type of construction for the building shall be determined by applying the height and area limitations for each of the applicable occupancies to the entire building. The most restrictive type of construction, so determined, shall apply to the entire building.

[ ] Separated Use (302.3.2) - See below for area calculations for each story, the area of the occupancy shall be such that the sum of the ratios of the actual floor area of each use divided by the allowable floor area for each use shall not exceed 1.

Actual Area of Occupancy A / *Allowable Area of Occupancy A* + *Actual Area of Occupancy B* / *Allowable Area of Occupancy B* ≤1
_____ + _____ = _____ ≤1.00

STORY NO.	DESCRIP. & USE	(A) BLDG. AREA PER STORY (ACTUAL)	(B) TABLE 506.2[4] AREA	(C) AREA FOR FRONTAGE INCREASE[1,2]	(D) ALLOWABLE AREA PER STORY OR UNLIMITED[2,3]
1st Floor	Utility (U)	1,565 SF	8,500	6,375 SF	14,875 SF
2nd Floor	Utility (U)	1,565 SF	8,500	6,375 SF	14,875 SF
3rd Floor	Utility (U)	480 SF	8,500	6,375 SF	14,875 SF
4th Floor	Utility (U)	480 SF	8,500	6,375 SF	14,875 SF

[1] Frontage area increases from Section 506.3 are computed thus:
a. Perimeter which fronts a public way or open space having 20 feet minimum width = 180' (F)
b. Total Building Perimeter = 180' (P)
c. Ratio (F/P) = 1 (F/P)
d. W = Minimum width of public way = 30' (W)
e. Percent of frontage increase I = 100 [F/P-0.25] x W/30 = 75 (%)
[2] Unlimited area applicable under conditions of Section 507.
[3] Maximum Building Area = total number of stories in the building x D (maximum 3 stories) (506.2).
[4] The maximum area of parking garages must comply with Table 406.5.4.
[5] Frontage increase is based on the unsprinklered area value in Table 506.2.

ALLOWABLE HEIGHT

	ALLOWABLE	SHOWN ON PLAN	CODE REFERENCE[1]
Building Height in Feet (Table 504.3)[2]	UL	43'-0"	503
Building Height in Stories (Table 504.4)[3]	UL	4	503

[1] Provide code reference if the "Shown on Plans" quantity is not based on Table 504.3 or 504.4.
[2] The maximum height of air traffic control towers must comply with Table 412.3.1.
[3] The maximum height of open parking garages must comply with Table 406.5.4.

FIRE PROTECTION REQUIREMENTS

Life Safety Plan Sheet #, if Provided:_ GI005

BUILDING ELEMENT	FIRE SEPARATION DISTANCE (FEET)	RATING REQ'D	RATING PROVIDED (W/_____ REDUCTION)	DETAIL # AND SHEET #	DESIGN # FOR RATED ASSEMBLY	DESIGN # FOR RATED PENETRATION	DESIGN # FOR RATED JOINTS
Structural Frame including columns, girders, trusses	>30 Ft	0	0	N/A	N/A	N/A	N/A
Bearing walls		0	0	N/A	N/A	N/A	N/A
Exterior		0	0	N/A	N/A	N/A	N/A
North	>30 Ft	0	0	N/A	N/A	N/A	N/A
East	>30 Ft	0	0	N/A	N/A	N/A	N/A
West	>30 Ft	0	0	N/A	N/A	N/A	N/A
South	>30 Ft	0	0	N/A	N/A	N/A	N/A
Interior	>30 Ft	0	0	N/A	N/A	N/A	N/A
Nonbearing walls and partitions							
Exterior							
North	>30 Ft	0	0	N/A	N/A	N/A	N/A
East	>30 Ft	0	0	N/A	N/A	N/A	N/A
West	>30 Ft	0	0	N/A	N/A	N/A	N/A
South	>30 Ft	0	0	N/A	N/A	N/A	N/A
Interior							
Floor construction Including supporting beams and joists	N/A	N/A	N/A	N/A	N/A	N/A	N/A
Floor Ceiling Assembly	N/A	N/A	N/A	N/A	N/A	N/A	N/A
Columns Supporting Floors	N/A	N/A	N/A	N/A	N/A	N/A	N/A
Roof Construction Including supporting beams and joists	N/A	N/A	N/A	N/A	N/A	N/A	N/A
Roof Ceiling Assembly	N/A	N/A	N/A	N/A	N/A	N/A	N/A
Columns Supporting Roof	N/A	N/A	N/A	N/A	N/A	N/A	N/A
Shaft Enclosures- Exit	N/A	N/A	N/A	N/A	N/A	N/A	N/A
Shaft Enclosures- Other	N/A	N/A	N/A	N/A	N/A	N/A	N/A
Corridor Separation	N/A	N/A	N/A	N/A	N/A	N/A	N/A
Occupancy/Fire Barrier Separation	N/A	N/A	N/A	N/A	N/A	N/A	N/A
Fire Area Separation	N/A	N/A	N/A	N/A	N/A	N/A	N/A
Smoke Barrier Separation	N/A	N/A	N/A	N/A	N/A	N/A	N/A
Smoke Partition	N/A	N/A	N/A	N/A	N/A	N/A	N/A
Tenant/Dwell. Unit/ Sleeping Unit Separation	N/A	N/A	N/A	N/A	N/A	N/A	N/A
Incidental Use Separation	N/A	N/A	N/A	N/A	N/A	N/A	N/A

PERCENTAGE OF WALL OPENING CALCULATIONS

FIRE SEPARATION DISTANCE (FEET FROM PROPERTY LINES)	DEGREE OF OPENINGS PROTECTION (TABLE 705.8)	ALLOWABLE AREA (%)	ACTUAL SHOWN ON PLANS (%)

LIFE SAFETY SYSTEM REQUIREMENTS

Emergency Lighting: [X] No [ ] Yes
Exit Signs: [X] No [ ] Yes
Fire Alarm system: [X] No [ ] Yes
Smoke Detection Systems: [X] No [ ] Yes [ ] Partial_____
Carbon Monoxide Detection: [X] No [ ] Yes

LIFE SAFETY PLAN REQUIREMENTS

(NOT APPLICABLE- TRAINING TOWER)

Life Safety Plan Sheet # _____

[ ] Fire and/or smoke rated wall locations (Chapter 7)
[ ] Assumed and real property line locations (if not on the site plan)
[ ] Exterior wall opening area with respect to distance to assumed property lines (705.8)
[ ] Occupancy Use for each area as it relates to occupant load calculations (Table 1004.1.2)
[ ] Occupant loads for each area
[ ] Exit access travel distances (1017)
[ ] Common path of travel distances (Tables 1006.2.1 and 1006.3.2(1))
[ ] Dead-end lengths (1020.4)
[ ] Clear exit widths for each exit door
[ ] Maximum calculated occupant load capacity each exit door can accommodate based on egress width (1005.3)
[ ] Actual occupant load for each exit door
[ ] A separate schematic plan indicating where fire rated floor/ceiling and/or roof structure is provided for purposes of occupancy separation
[ ] Location of doors with panic hardware (1010.1.10)
[ ] Location of doors with delayed egress locks and the amount of delay (1010.1.9.7)
[ ] Location of doors with electromagnetic egress locks (1010.1.9.9)
[ ] Location of doors equipped with hold-open devices
[ ] Location of emergency escape windows (1030)
[ ] The square footage of each fire area (202)
[ ] The square footage of each smoke compartment for Occupancy Classification I-2 (407.5)
[ ] Note any code exceptions or table notes that may have been utilized regarding the items above

ACCESSIBLE DWELLING UNITS (SECTION 1107)

(NOT APPLICABLE)

TOTAL UNITS	ACCESSIBLE UNITS REQUIRED	ACCESSIBLE UNITS PROVIDED	TYPE A UNITS REQUIRED	TYPE A UNITS PROVIDED	TYPE B UNITS REQUIRED	TYPE B UNITS PROVIDED	TOTAL ACCESSIBLE UNITS PROVIDED

ACCESSIBLE PARKING (SECTION 1106)

(NOT APPLICABLE)

LOT OR PARKING AREA	TOTAL # OF PARKING SPACES		# OF ACCESSIBLE SPACES PROVIDED			TOTAL # ACCESSIBLE PROVIDED
	REQUIRED	PROVIDED	REGULAR WITH 5' ACCESS AISLE	VAN SPACES WITH		
				132" ACCESS AISLE	8' ACCESS AISLE	
TOTAL						

PLUMBING FIXTURE REQUIREMENT (TABLE 2902.1)

(NOT APPLICABLE)

USE		WATERCLOSETS			URINALS	LAVATORIES			SHOWERS/ TUBS	DRINKING FOUNTAINS	
		MALE	FEMALE	UNISEX		MALE	FEMALE	UNISEX		REGULAR	ACCESSIBLE
SPACE	EXISTING										
	NEW										
	REQUIRED										

SPECIAL APPROVALS

(NOT APPLICABLE)

Special Approval: (Local Jurisdiction, Department of Insurance, OSC, DPI, DHHS, etc., describe below)

ENERGY SUMMARY

Energy Requirements:
The following data shall be considered minimum and any special attribute required to meet the energy code shall also be provided. Each Designer shall furnish the required portions of the project information for the plan data sheet. If performance method, state the annual energy cost for the standard reference design vs annual energy cost for the proposed design.

Existing building envelope complies with code: [ ] No [ ] Yes (The remainder of this section is not applicable)

Exempt Building: [ ] No [X] Yes (Provide code or statutory reference): IECC C402.1.1 (2) Low Energy Buildings- (No conditioned space)

Climate Zone: [ ] 3A [ ] 4A [ ] 5A

Method of Compliance: Energy Code [ ] Performance [ ] Prescriptive
ASHRAE 90.1 [ ] Performance [ ] Prescriptive
(If "other" specify source here)_____

THERMAL ENVELOPE (Prescriptive method only)

Roof/ceiling Assembly (each assembly)
Description of assembly
U-Value of total assembly
R-Value of insulation
Skylights in each assembly
U-Value of skylight
Total square footage of skylights in each assembly

Exterior Walls (each assembly)
Description of assembly:
U-Value of total assembly:
R-Value of insulation
Openings (windows or doors with glazing)
U-Value of assembly:
Solar heat gain coefficient:
Projection factor:
Door R-Values:

Walls below grade (each assembly)
Description of assembly:
U-Value of total assembly:
R-Value of insulation

Floors over unconditioned space (each assembly)
Description of assembly:
U-Value of total assembly:
R-Value of insulation

Floors slab on grade (each assembly)
Description of assembly:
U-Value of total assembly:
R-Value of insulation
Horizontal/vertical requirement
Slab heated

STRUCTURAL DESIGN

(BURN /DRILL TOWER STRUCTURAL DESIGN BY MANUFACTURER)

DESIGN LOADS:

Importance Factors: Snow (I_s) _____ Seismic (I_E) _____

Live Loads: Roof _____ psf
Mezzanine _____ psf
Floor _____ psf

Ground Snow Load: _____ psf

Wind Load: Ultimate Wind Speed _____ mph (ASCE-7-10)
Exposure Catgory _____

SEISMIC DESIGN CATEGORY: [ ] A [ ] B [ ] C [ ] D
Provide the following Seismic Design Parameters:
Risk Category (Table 1604.5) [ ] I [ ] II [ ] III [ ] IV
Spectral Response Acceleration S_S _____ %g S_1 _____ %g
Site Classification (ASCE 7) [ ] A [ ] B [ ] C [ ] D [ ] E [ ] F
Date Source: [ ] Field Test [ ] Presumptive [ ] Historical Data
Basic Structural System [ ] Bearing Wall [ ] Building Frame [ ] Moment Frame [ ] Dual w/Special Moment Frame [ ] Dual w/Intermediate R/C or Special Steel [ ] Inverted Pendulum
Analysis Procedure: [ ] Simplified [ ] Equivalent Lateral Force [ ] Dynamic
Architectural,Mechanical,Components anchored? [ ] Yes [ ] No

LATERAL DESIGN CONTROL: [ ] Earthquake [ ] Wind

SOIL BEARING CAPACITY:
Field Test (provide copy of test report)_____ psf
Presumtive Bearing capacity _____ psf
Pile size, type and capacity _____

MECHANICAL DESIGN

(NO MECHANICAL SYSTEMS)

MECHANICAL SUMMARY

MECHANICAL SYSTEMS, SERVICE SYSTEMS AND EQUIPMENT

Thermal Zone
winter dry bulb
summer dry bulb

Interior Design Conditions
winter dry bulb
summer dry bulb
relative humidity

Building Heating Load

Building Cooling Load

Mechanical Spacing Conditioning System
Unitary
description of unit
heating efficiency
cooling efficiency
size category of unit
Boiler
size category. If oversized, state reason.
Chiller
size category. If oversized, state reason.

List Equipment efficiencies

ELECTRICAL DESIGN

(NO ELECTRICAL SYSTEMS)

ELECTRICAL SUMMARY

ELECTRICAL SYSTEM AND EQUIPMENT

Method of Compliance: Energy Code [ ] Prescriptive [ ] Performance
ASHRAE 90.1 [ ] Prescriptive [ ] Performance

Lighting Schedule (each fixture type)
lamp type required in fixture
number of lamps in fixture
ballast type used in fixture
number of ballast in fixture
total wattage per fixture
total interior wattage specified vs. allowed (whole building or space by space)
total exterior wattage specified vs. allowed

Additional Efficiency Package Options
When using the 2018 NCECC; not required for ASHRAE 90.1)

[ ] C406.2 More Efficient HVAC Equipment Performance
[ ] C406.3 Reduced Lighting Power Density
[ ] C406.4 Enhanced Digital Lighting Controls
[ ] C406.5 On-Site Renewable Energy
[ ] C406.6 Dedicated Outdoor Air System
[ ] C406.7 Reduced Energy Use in Service Water Heating

WALKER the GROUP ARCHITECTURE incorporated
PO BOX 541, NEW BERN, NC 28563
252-636-8778

Christopher B. Walker REGISTERED SEAL 15616 07/28/25 ARCHITECT NORTH CAROLINA

THE WALKER GROUP ARCHITECTURE, INCORPORATED REGISTERED ARCHITECTURAL CORPORATION CERT. NO. 51132 NORTH CAROLINA NEW BERN, NC

CRAVEN COMMUNITY COLLEGE- PUBLIC SAFETY TRAINING CENTER

525 Executive Pkwy
New Bern, NC 28562

Bid Documents

SCO # 24-27879-01A

Revisions

No.	Date

Project Number: 2407.SAFE
Date: 07/28/25
Drawn: Author
Checked: Checker
Scale: AS NOTED
Drawing Title

DRILL/BURN TOWER - CODE ANALYSIS

Sheet Number
7 Of 158

Drawing Number
GI007

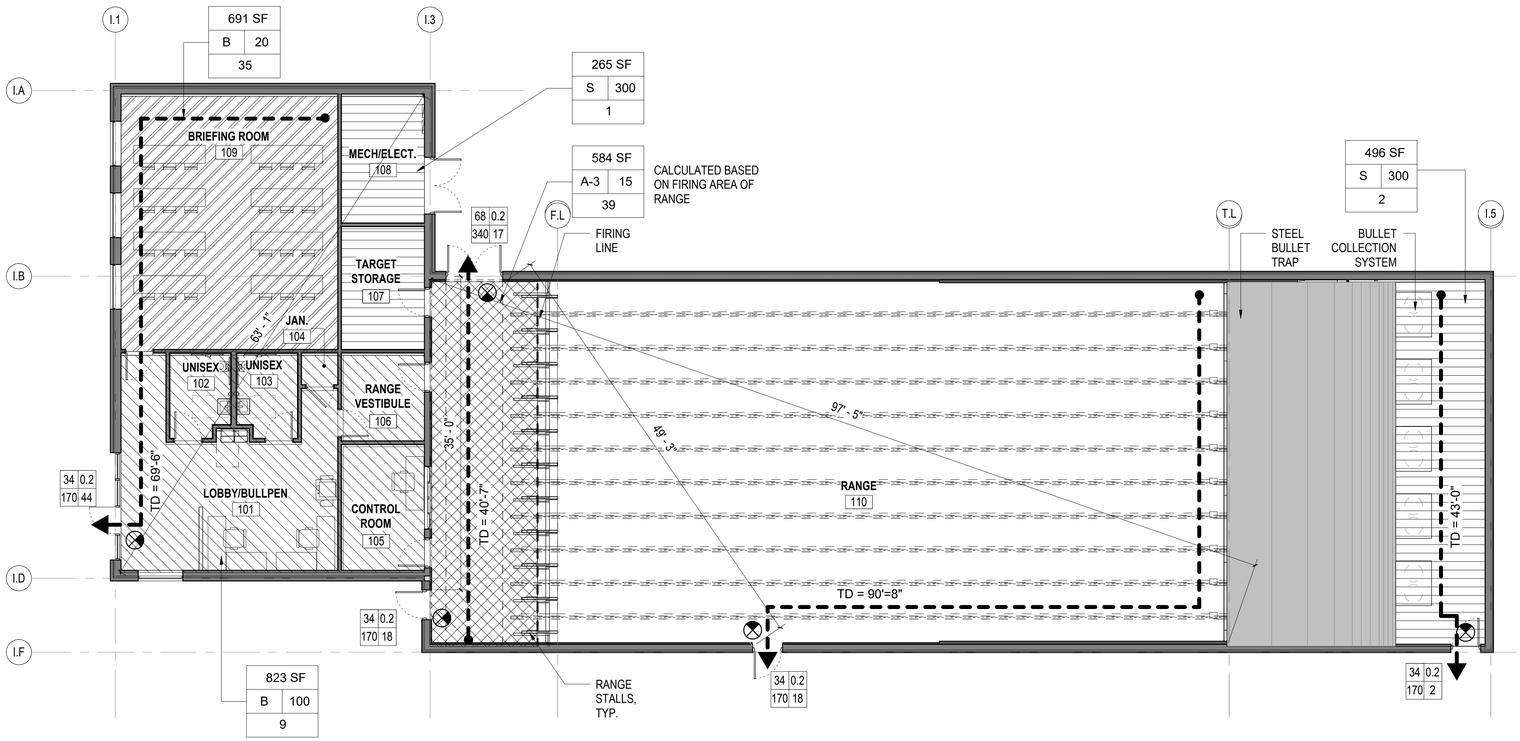

INDOOR RANGE- LIFE SAFETY PLAN

SCALE: 1/8" = 1'-0"

PLAN NORTH

LIFE SAFETY PLAN LEGEND

SYMBOL	DESCRIPTION
CPT = X'-XX"	COMMON PATH OF TRAVEL
TD = X'-XX"	TRAVEL DISTANCE
W P / C A	W: NET EXIT WIDTH (INCHES) C: CAPACITY (PEOPLE) P: EXIT WIDTH PER PERSON A: ACTUAL EGRESS (PEOPLE)
OCCUPANCY, TYPE A - ASSEMBLY B - BUSINESS S - STORAGE 1500 SF / B 150 / 10	ROOM / ZONE AREA OCCUPANCY, ALLOWABLE AREA PER OCCUPANT OCCUPANCY LOAD (PEOPLE)
	(B) BUSINESS (100 OCCUPANTS PER SF)
	(B) CLASSROOM (20 OCCUPANTS PER SF)

TOTAL OCCUPANT LOAD: 86 OCCUPANTS

1/8" =1'-0" 0' 4' 8' 16'

WALKER the GROUP ARCHITECTURE incorporated
PO BOX 541, NEW BERN, NC 28563
252-636-8778

Christopher B. Walker REGISTERED SEAL 15616 07/28/25 ARCHITECT NORTH CAROLINA

THE WALKER GROUP ARCHITECTURE INCORPORATED REGISTERED ARCHITECTURAL CORPORATION CERT. NO. 51132 NORTH CAROLINA NEW BERN, NC

CRAVEN COMMUNITY COLLEGE- PUBLIC SAFETY TRAINING CENTER

525 Executive Pkwy
New Bern, NC 28562

Bid Documents

SCO # 24-27879-01A

Revisions

No.	Date

Project Number 2407.SAFE
Date 07/28/25
Drawn Author
Checked Checker
Scale AS NOTED

Drawing Title

RANGE BLDG - LIFE SAFETY PLAN

Sheet Number 8 Of 158

Drawing Number

GI008

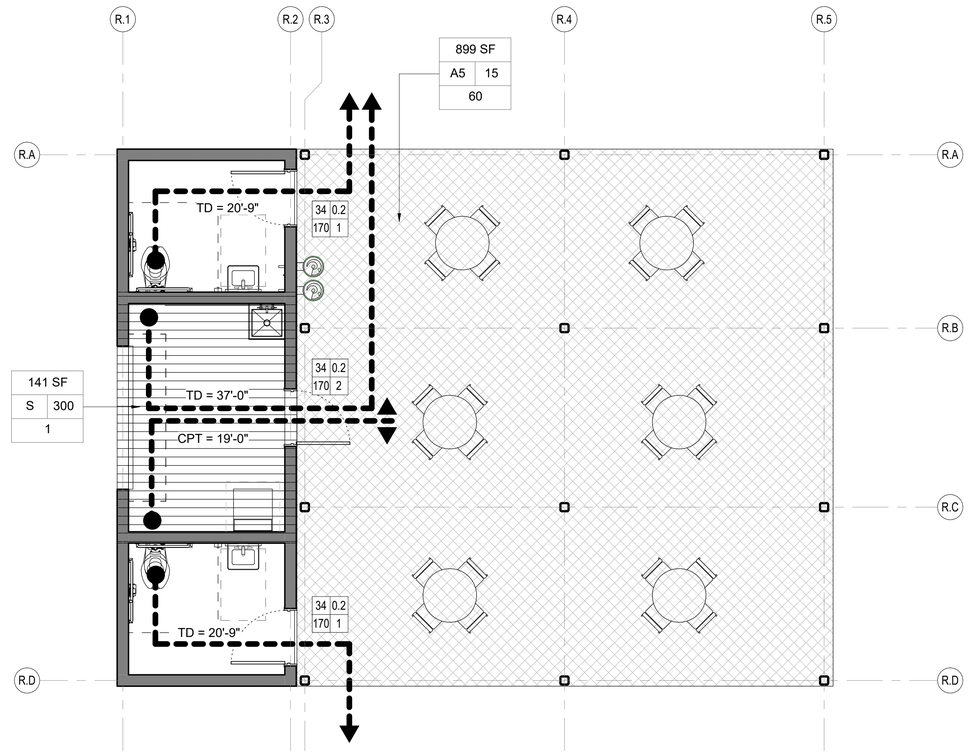

REHAB SHELTER - LIFE SAFETY PLAN

SCALE: 1/4" = 1'-0"

LIFE SAFETY PLAN LEGEND

SYMBOL	DESCRIPTION
CPT = X'-XX"	COMMON PATH OF TRAVEL
TD = X'-XX"	TRAVEL DISTANCE
W P / C A	W: NET EXIT WIDTH (INCHES) C: CAPACITY (PEOPLE) P: EXIT WIDTH PER PERSON A: ACTUAL EGRESS (PEOPLE)
OCCUPANCY, TYPE A - ASSEMBLY B - BUSINESS S - STORAGE 1500 SF / B 150 / 10	ROOM / ZONE AREA OCCUPANCY, ALLOWABLE AREA PER OCCUPANT OCCUPANCY LOAD (PEOPLE)
	(B) BUSINESS (100 OCCUPANTS PER SF)
	(B) CLASSROOM (20 OCCUPANTS PER SF)

1/4" =1'-0" 0' 2' 4' 8'

WALKER the GROUP ARCHITECTURE incorporated
PO BOX 541, NEW BERN, NC 28563
252-636-8778

Christopher B. Walker REGISTERED SEAL 15616 07/28/25 ARCHITECT NORTH CAROLINA

THE WALKER GROUP ARCHITECTURE INCORPORATED REGISTERED ARCHITECTURAL CORPORATION CERT. NO. 51132 NORTH CAROLINA NEW BERN, NC

CRAVEN COMMUNITY COLLEGE- PUBLIC SAFETY TRAINING CENTER

525 Executive Pkwy
New Bern, NC 28562

Bid Documents

SCO # 24-27879-01A

Revisions

No.	Date

Project Number: 2407.SAFE
Date: 07/28/25
Drawn: Author
Checked: Checker
Scale: AS NOTED

Drawing Title

REHAB BLDG - LIFE SAFETY PLAN

Sheet Number
9 of 158

Drawing Number
GI009

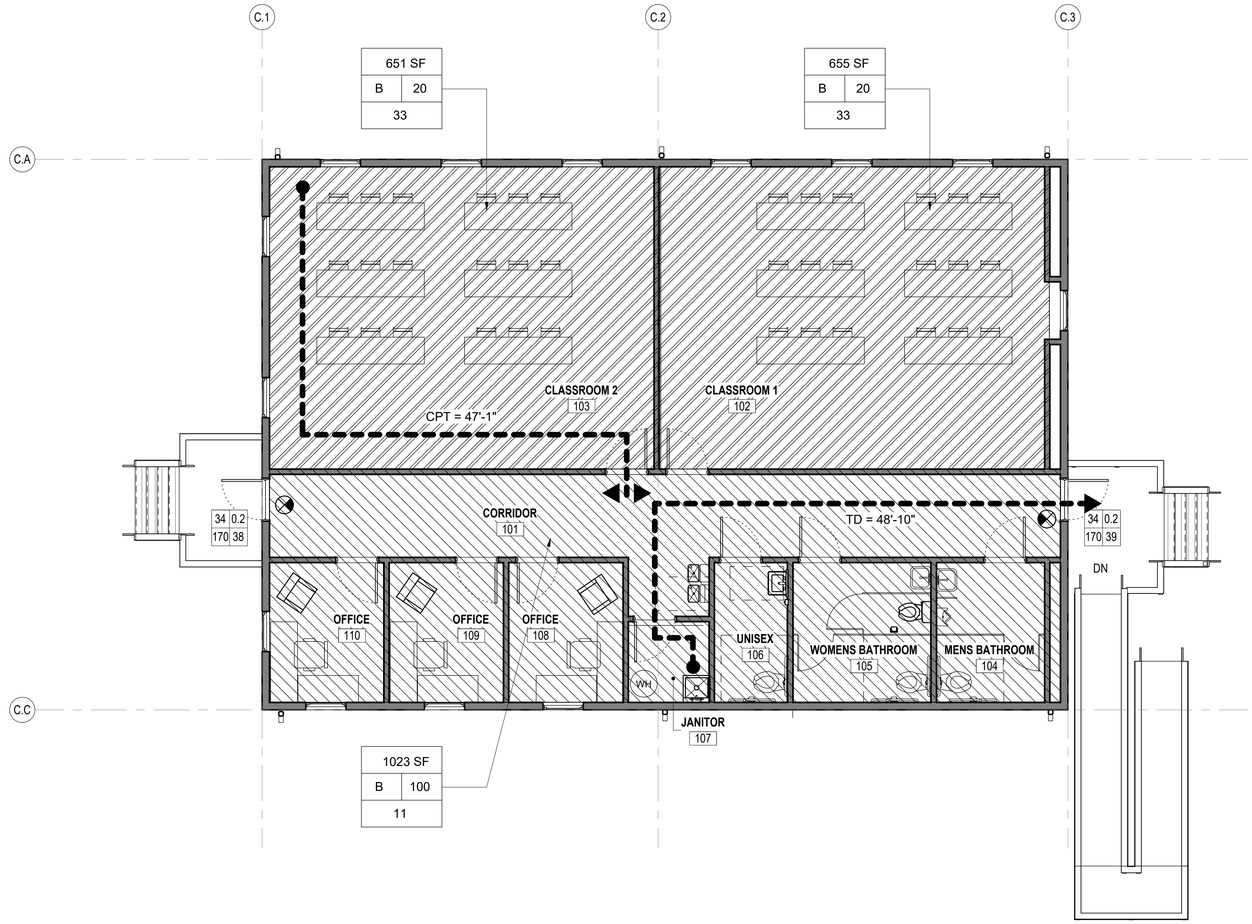

MODULAR CLASSROOM LIFE SAFETY PLAN

SCALE: 3/16" = 1'-0"

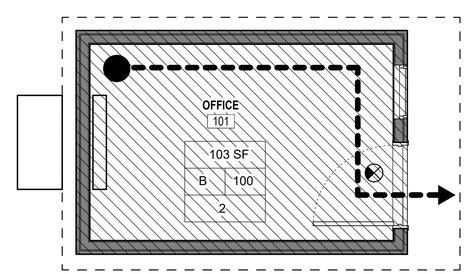

GATEHOUSE LIFE SAFETY PLAN

SCALE: 3/8" = 1'-0"

LIFE SAFETY PLAN LEGEND

SYMBOL	DESCRIPTION
CPT = X'-XX"	COMMON PATH OF TRAVEL
TD = X'-XX"	TRAVEL DISTANCE
W P / C A	W: NET EXIT WIDTH (INCHES) C: CAPACITY (PEOPLE) P: EXIT WIDTH PER PERSON A: ACTUAL EGRESS (PEOPLE)
OCCUPANCY, TYPE A - ASSEMBLY B - BUSINESS S - STORAGE	1500 SF — ROOM / ZONE AREA B 150 — OCCUPANCY, ALLOWABLE AREA PER OCCUPANT 10 — OCCUPANCY LOAD (PEOPLE)
	(B) BUSINESS (100 OCCUPANTS PER SF)
	(B) CLASSROOM (20 OCCUPANTS PER SF)

3/16" =1'-0" 0' 4' 8' 12'

3/8" =1'-0" 0' 2' 4' 6'

WALKER the GROUP ARCHITECTURE incorporated
PO BOX 541, NEW BERN, NC 28563
252-636-8778

Christopher B. Walker REGISTERED SEAL 15616 07/28/25 ARCHITECT NORTH CAROLINA

THE WALKER GROUP ARCHITECTURE INCORPORATED REGISTERED ARCHITECTURAL CORPORATION CERT. NO. 51132 NORTH CAROLINA NEW BERN, NC

CRAVEN COMMUNITY COLLEGE- PUBLIC SAFETY TRAINING CENTER

525 Executive Pkwy
New Bern, NC 28562

Bid Documents

SCO # 24-27879-01A

Revisions

No.	Date

Project Number: 2407.SAFE
Date: 07/28/25
Drawn: Author
Checked: Checker
Scale: AS NOTED

Drawing Title

MOD. CLASS BLDG & GATEHOUSE - LIFE SAFETY PLAN

Sheet Number
10 Of 158

Drawing Number
GI010

CIVIL LEGEND

DESCRIPTION	EXISTING / DEMO	NEW
WATER VALVE/POST INDICATOR VALVE	PIV	
TELECOMMUNICATIONS MANHOLE	C	
SANITARY SEWER MANHOLE	S	S
STORM DRAIN MANHOLE	D	
CLEANOUT	CO	CO
STORM DRAIN INLET		
FIRE HYDRANT		
TELECOMMUNICATIONS PEDESTAL	TPED	
UTILITY POLE/POLE WITH LIGHT		
GUY WIRE		
DITCH/SWALE CENTERLINE		
SANITARY SEWER (GRAVITY)	S	S
SANITARY SEWER (FORCE MAIN)	FM	
STORM SEWER	D	D
DOMESTIC/FIRE WATER	W FW	W FW
FIRE DEPARTMENT CONNECTION (LINE)	FDC	FDC
UNDERGROUND NATURAL GAS	G	G
OVERHEAD ELECTRICAL	OHE	
UNDERGROUND ELECTRICAL	UGE	UGE
UNDERGROUND FIBER OPTIC	FO	FO
DUAL TEMPERATURE THERMAL	HCW	
UNDERGROUND COMMUNICATIONS	UGC	UGC
OVERHEAD COMMUNICATIONS	OHC	
FENCE	x	x
CONCRETE		
ASPHALT		
GRAVEL		
SURVEY CONTROL POINT		
SPOT ELEVATIONS	× 5.00	+ XX.XX
CONTOUR LINES	25	25
TREE LINE		CL
SOURCE/DESTINATION UNKNOWN	?	
SIGN		
DEMOLITION ITEMS		

EROSION CONTROL SYMBOL LEGEND:

SLT SLT = SILT FENCE, SEE DETAIL A, SHEET CG503.

= GRAVEL CONTROL ENTRANCE, SEE DETAIL B, SHEET CG503.

= CHECK DAM, SEE DETAIL C, SHEET CG503.

= INLET/OUTLET PROTECTION, SEE DETAIL D, SHEET CG503.

= DROP INLET PROTECTION, SEE DETAIL E, SHEET CG503.

CIVIL ABBREVIATIONS

AC, A/C	AIR CONDITIONING EQUIPMENT
APPROX.	APPROXIMATE/APPROXIMATELY
AST	ABOVE-GROUND STORAGE TANK
AT	ANTI-TERRORISM
BLDG	BUILDING
BOL	BOLLARD
CI	CAST IRON (PIPE)
CJ	CONTRACTION JOINT
CMH	COMMUNICATIONS MANHOLE
CMP	CORRUGATED METAL PIPE
CMU	CONCRETE MASONRY UNIT
CO	CLEANOUT
CONC	CONCRETE
DIA, ø	DIAMETER
DI	(STORM DRAIN) DROP INLET
DI	DUCTILE IRON (PIPE)
DMH	DRAINAGE MANHOLE
EJ	EXPANSION JOINT
EL/ELEV	ELEVATION
EMH	ELECTRIC MANHOLE
EOP	EDGE OF PAVEMENT
EX, EXIST	EXISTING
FDC	FIRE DEPARTMENT CONNECTION
FES	FLARED END SECTION
FFE	FINISH FLOOR ELEVATION
FH	FIRE HYDRANT
FM	SANITARY SEWER FORCE MAIN
FO	FIBER OPTIC
GV	GATE VALVE
HOR	HORIZONTAL
HVAC	HEATING, VENTILATION AND AIR CONDITIONING
INV	INVERT
JBOX	ELECTRIC JUNCTION BOX
LF	LINEAR FOOT/FEET
MAG	MAG NAIL (SURVEY CONTROL)
MAX	MAXIMUM
MH	MANHOLE
MIN	MINIMUM
NTS	NOT TO SCALE
OHE	OVERHEAD ELECTRIC
OC	ON CENTER
OD	OUTSIDE DIAMETER
OWS	OIL/WATER SEPARATOR
PIV	POST INDICATOR VALVE
R	RADIUS
RCP	REINFORCED CONCRETE PIPE
STA	STATION
SMH	SANITARY SEWER MANHOLE
TBM	TEMPORARY SITE BENCHMARK
TC	TOP OF CURB
TEMP	TEMPORARY
TMH	TELEPHONE MANHOLE
TOB	TOP OF BANK
TON	TOP OF (VALVE) NUT
TYP	TYPICAL
UGC	UNDERGROUND COMMUNICATIONS
UGE	UNDERGROUND ELECTRIC
UON	UNLESS OTHERWISE NOTED
WV	WATER VALVE
XFMR	PAD-MOUNTED ELECTRIC TRANSFORMER
YH	YARD HYDRANT

GENERAL CONSTRUCTION NOTES

1. COMPLETE CONSTRUCTION OPERATIONS IN COMPLIANCE WITH ALL STATE AND FEDERAL REGULATIONS AND AS SPECIFIED.
2. THE PLANS DEPICT THE GENERAL INTENT OF CONSTRUCTION. THE CONTRACTOR SHALL PROTECT ALL EXISTING FEATURES THAT ARE NOT SLATED FOR DEMOLITION. ANY ITEM DAMAGED AS A RESULT OF THE CONTRACTOR'S OPERATIONS SHALL BE RESTORED TO ITS ORIGINAL CONDITION OR REPLACED WITH NEW.
3. DIMENSIONS AND CONDITIONS SHOWN ARE APPROXIMATE AND ARE ACCURATE AS OF THE TIME OF SITE INSPECTION. THE CONTRACTOR SHALL CONFIRM TO HIS OWN SATISFACTION SITE CONDITIONS INCLUDING A VERIFICATION OF CONDITIONS SHOWN AND NOT SHOWN.
4. ADJACENT STRUCTURES AND UTILITIES MUST REMAIN IN OPERATION DURING CONSTRUCTION ACTIVITIES. EXISTING ROADS SHALL REMAIN OPEN AND ACCESSIBLE BY VEHICULAR AND PEDESTRIAN TRAFFIC. IF ROADWAY CLOSURE IS REQUIRED, APPROVAL SHALL BE SECURED FROM THE CONTRACTING OFFICER. THE CONTRACTOR SHALL PROVIDE BARRICADES, LIGHTS, SIGNAGE AND OTHER PROTECTIVE DEVICES IN ACCORDANCE WITH THE MANUAL OF UNIFORM TRAFFIC CONTROL DEVICES (MUTCD).
5. THE CONTRACTOR SHALL PROVIDE FENCING, BARRICADES OR OTHER PROTECTIVE DEVICES TO MAINTAIN A SECURED WORK AREA AT ALL TIMES.
6. PRIOR TO STARTING CONSTRUCTION ON ANY STRUCTURES OR UTILITIES, THE CONTRACTOR SHALL FAMILIARIZE HIMSELF WITH THE EXISTING CONDITIONS OF ANY STRUCTURES AND UTILITIES. THE CONTRACTOR SHALL DEVELOP A PLAN OF CONSTRUCTION THAT ENSURES ALL ACTIVITIES ARE COMPLETED IN A SAFE MANNER. PROVIDE ANY TEMPORARY SHORING, SHEETING OR SUPPORT REQUIRED TO COMPLETE WORK IN A SAFE MANNER.
7. COMPLETELY REMOVE ALL STRUCTURE AND UTILITIES INDICATED, BOTH ABOVE GROUND AND BELOW GROUND.
8. ALL EXCAVATIONS CREATED BY CONSTRUCTION OR DEMOLITION ACTIVITIES, INCLUDING PAVEMENT AND STONE BASE REMOVAL, SHALL BE BACKFILLED WITH COMMON FILL, SHALL BE GRADED TO CREATE POSITIVE DRAINAGE, AND SHALL BE VEGETATED IN ACCORDANCE WITH THE PROJECT VEGETATION PLAN, UNLESS DEPICTED OTHERWISE. GRAVEL AND PAVED SURFACES SHALL BE RESTORED TO THEIR ORIGINAL CONDITION. SEE PROJECT SPECIFICATION FOR SPECIFIC COMPACTION REQUIREMENTS.
9. ALL EROSION CONTROL FEATURES SHOWN SHALL BE INSTALLED PRIOR TO CONSTRUCTION ACTIVITIES STARTING.
10. THE CONTRACTOR SHALL MINIMIZE DUST GENERATED FROM CONSTRUCTION ACTIVITIES BY WET METHODS OR OTHER APPROVED METHODS.
11. WHERE ROADS, SIDEWALKS, ETC ARE INDICATED TO BE CUT AND PATCHED, EACH SHALL BE REMOVED AND REPLACED ALONG NEAT SAW CUT LINES, AND TO THE NEAREST JOINT WHERE IT EXISTS.
12. ANY FILL MATERIAL REQUIRED TO ESTABLISH THE FINISH GRADES SHOWN SHALL BE OBTAINED FROM A PROPERLY PERMITTED BORROW PIT. ANY EXCESS SOIL MATERIAL GENERATED FROM DEMOLITION ACTIVITIES SHALL BE DISPOSED OF OFF OF THE PROPERTY.
13. ALL EXISTING VEGETATED AREAS DISTURBED DURING CONSTRUCTION SHALL BE REVEGETATED IN ACCORDANCE WITH THE PROJECT VEGETATION PLAN, SEE SHEET CG501.
14. GRADE EVENLY BETWEAN ALL SPOT ELEVATIONS SHOWN.

UTILITY NOTES

1. THE LOCATION AND DEPTHS OF EXISTING UTILITIES SHOWN ARE APPROXIMATE. THE CONTRACTOR SHALL SECURE THE SERVICES OF A PROFESSIONAL UTILITY LOCATE CONTRACTOR TO MARK ALL EXISTING UTILITIES IN THE AREA OF WORK. UTILITY MARKINGS SHALL BE MAINTAINED FOR THE DURATION OF DEMOLITION ACTIVITIES. THE CONTRACTOR SHALL NOTIFY 811 SERVICE TO LOCATE ALL PRIVATE UTILITIES IN THE WORK AREA PRIOR TO STARTING DEMOLITION.
2. ALL UTILITY LINES TO REMAIN SHALL REMAIN ACTIVE AND SHALL BE PROTECTED DURING DEMOLITION ACTIVITIES.
3. EXISTING UTILITIES SHALL NOT BE INTERRUPTED WITHOUT THE APPROVAL OF THE CONTRACTING OFFICER.
4. THE CONTRACTOR SHALL BE RESPONSIBLE TO REPAIR OR REPLACE, TO ORIGINAL CONDITION, ANY UTILITIES DAMAGED DURING DEMOLITION ACTIVITIES FROM THE CONTRACTOR'S OPERATIONS.
5. ALL COSTS ASSOCIATED WITH LOCATING, DISCONNECTING ABANDONING AND CAPPING OF UTILITY LINES SHALL BE THE RESPONSIBILITY OF THE CONTRACTOR.
6. THE CONTRACTOR SHALL BE RESPONSIBLE TO COORDINATE THE REMOVAL OF ALL UTILITIES INDICATED WITH THEIR RESPECTIVE UTILITY PURVEYORS.
7. ALL PIPES AND CONDUITS THAT ARE TO BE ABANDONED IN PLACE, SHALL BE CAPPED OR PLUGGED TO SECURE ALL OPEN ENDS TO FORM A WATERTIGHT SEAL.
8. ALL ELECTRICAL WORK SHALL BE COMPLETED IN ACCORDANCE WITH THE NATIONAL ELECTRIC CODE.
9. ALL COMMUNICATION SYSTEM WORK SHALL BE COORDINATED WITH BASE TELEPHONE THROUGH THE CONTRACTING OFFICER.
10. ALL WORK ASSOCIATED WITH THE NATURAL GAS SERVICES TO ANY STRUCTURE SHALL BE COORDINATED WITH PIEDMONT NATURAL GAS, THROUGH THE CONTRACTING OFFICER. NO WORK SHALL BE PERFORMED TO THE NATURAL GAS LINES OR SERVICES WITHOUT THE EXPRESS CONSENT OF PIEDMONT NATURAL GAS.

SURVEY NOTES:

1. TOPOGRAPHIC AND PHYSICAL SURVEY WAS PERFORMED BY AVOLIS ENGINEERING, P.A. IN MAY 2024.
2. UTILITIES SHOWN ARE BASED UPON ABOVE GROUND FEATURES, AVAILABLE UTILITY PLANS, GIS INFORMATION, AS-BUILT DRAWINGS AND UTILITY LOCATE SERVICES BY GEOPHYSICAL METHODS (LEVEL B PER ASCE 30-02 STANDARDS) COMPLETING BY PROFESSIONAL LOCATING SERVICES, LLC OF JACKSONVILLE, NC. MARKED UTILITIES WERE SURVEYED TO DOCUMENT LOCATIONS.
3. ELEVATIONS SHOWN ARE IN FEET AND REFER TO NORTH AMERICAN VERTICAL DATUM (NAVD) 1988 AND ARE BASED UPON CAMP LEJEUNE CONTROL AS SHOWN.
4. COORDINATES SHOWN REFER TO NORTH CAROLINA STATE PLANE COORDINATES SYSTEM, NAD 1983/2011.
5. TEMPORARY BENCHMARKS WHERE PLACED AT OR ADJACENT TO THE CONSTRUCTION SITE AS INDICATED.

FLOOD MAP SUMMARY

THE SUBJECT PROPERTY IS LOCATED IN A ZONE X (AREA OF MINIMAL RISK) ACCORDING TO FLOOD MAP 3720678600K, PANEL 6786 EFFECTIVE MARCH 18, 2008.

A CIVIL NOTES, LEGEND AND ABBREVIATIONS

SCALE: 1" = 40'

TN
PN

AVOLIS ENGINEERING, P.A.
P.O. BOX 15564
NEW BERN, NC 28561
PH. (252) 633-0068
kevin@avoliseng.com
LICENSE NO. C-0706
A/E PROJECT #23020

WALKER the GROUP ARCHITECTURE incorporated
PO BOX 541, NEW BERN, NC 28563
2526366778

Digitally signed by John K. Avolis
NORTH CAROLINA PROFESSIONAL SEAL 15738 ENGINEER JOHN K. AVOLIS
JULY 28, 2025

PUBLIC SAFETY TRAINING CENTER

525 Executive Pkwy
New Bern, NC 28562

BID DOCUMENTS

SCO # 24-27879-01A

No.	Date	Revisions

Project Number

Date **7-28-2025**

Drawn **MSP**

Checked **JKA**

Scale **AS NOTED**

Drawing Title

CIVIL NOTES, LEGEND AND ABBREVIATIONS

Sheet Number **11** of **158**

Drawing Number

C-001

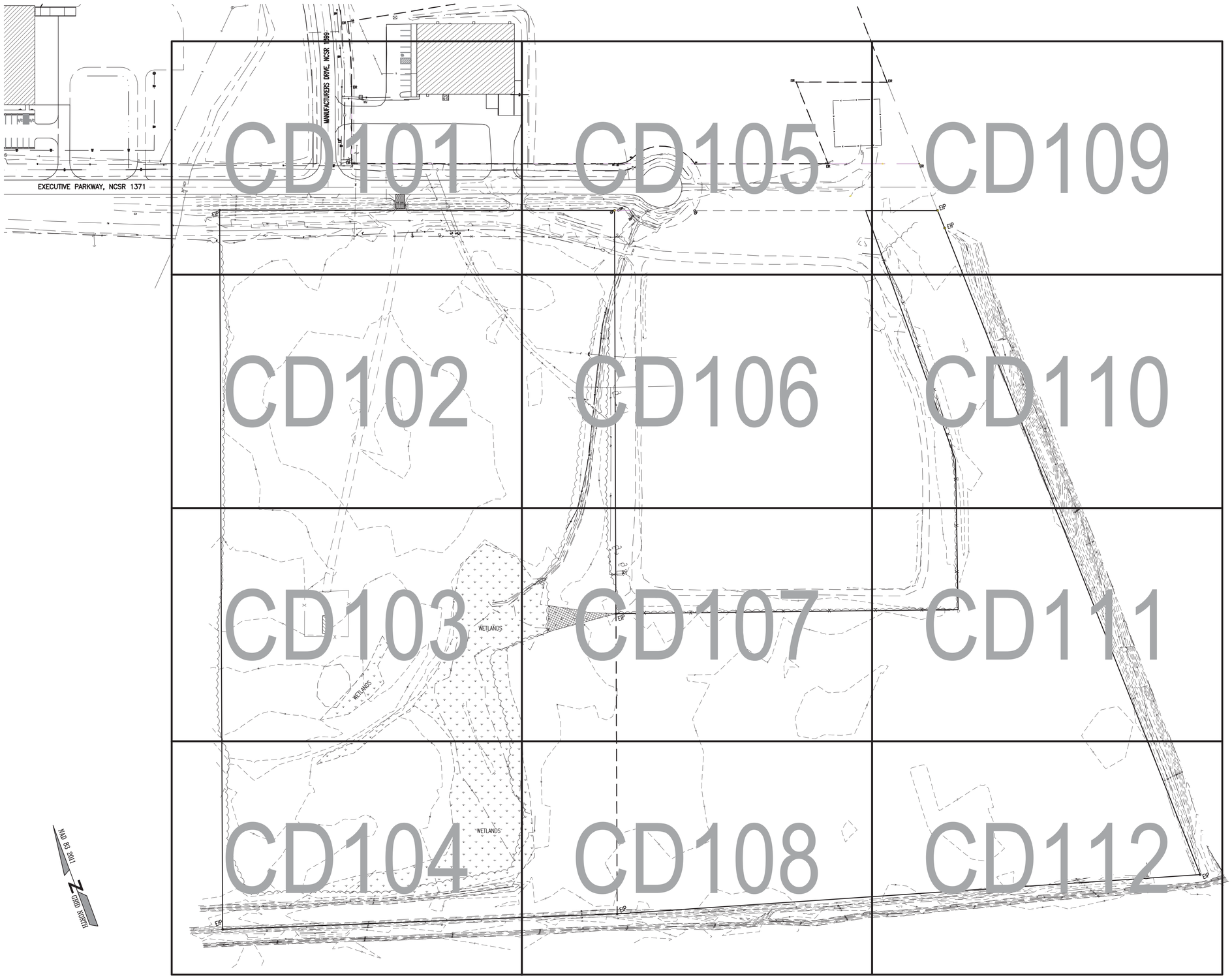

A OVERALL SITE PLAN-EXISTING CONDITIONS
SCALE: 1" = 80'

TN PN

80 0 40 80 160
GRAPHIC SCALE: 1" = 80'

AVOLIS ENGINEERING, P.A.
P.O. BOX 15564
NEW BERN, NC 28561
PH. (252) 633-0068
kevin@avoliseng.com
LICENSE NO. C-0706
A/E PROJECT #23020

WALKER the GROUP ARCHITECTURE incorporated
PO BOX 541, NEW BERN, NC 28563
2526366778

Digitally signed by John K. Avolis
NORTH CAROLINA PROFESSIONAL SEAL 15738 ENGINEER JOHN K. AVOLIS
JULY 28, 2025

PUBLIC SAFETY TRAINING CENTER

525 Executive Pkwy
New Bern, NC 28562

BID DOCUMENTS
SCO # 24-27879-01A

No.	Date	Revisions

Project Number

Date **7-28-2025**

Drawn **MSP**

Checked **JKA**

Scale **AS NOTED**

Drawing Title

OVERALL SITE PLAN-EXISTING CONDITIONS

Sheet Number **12** of **158**

Drawing Number

C-100

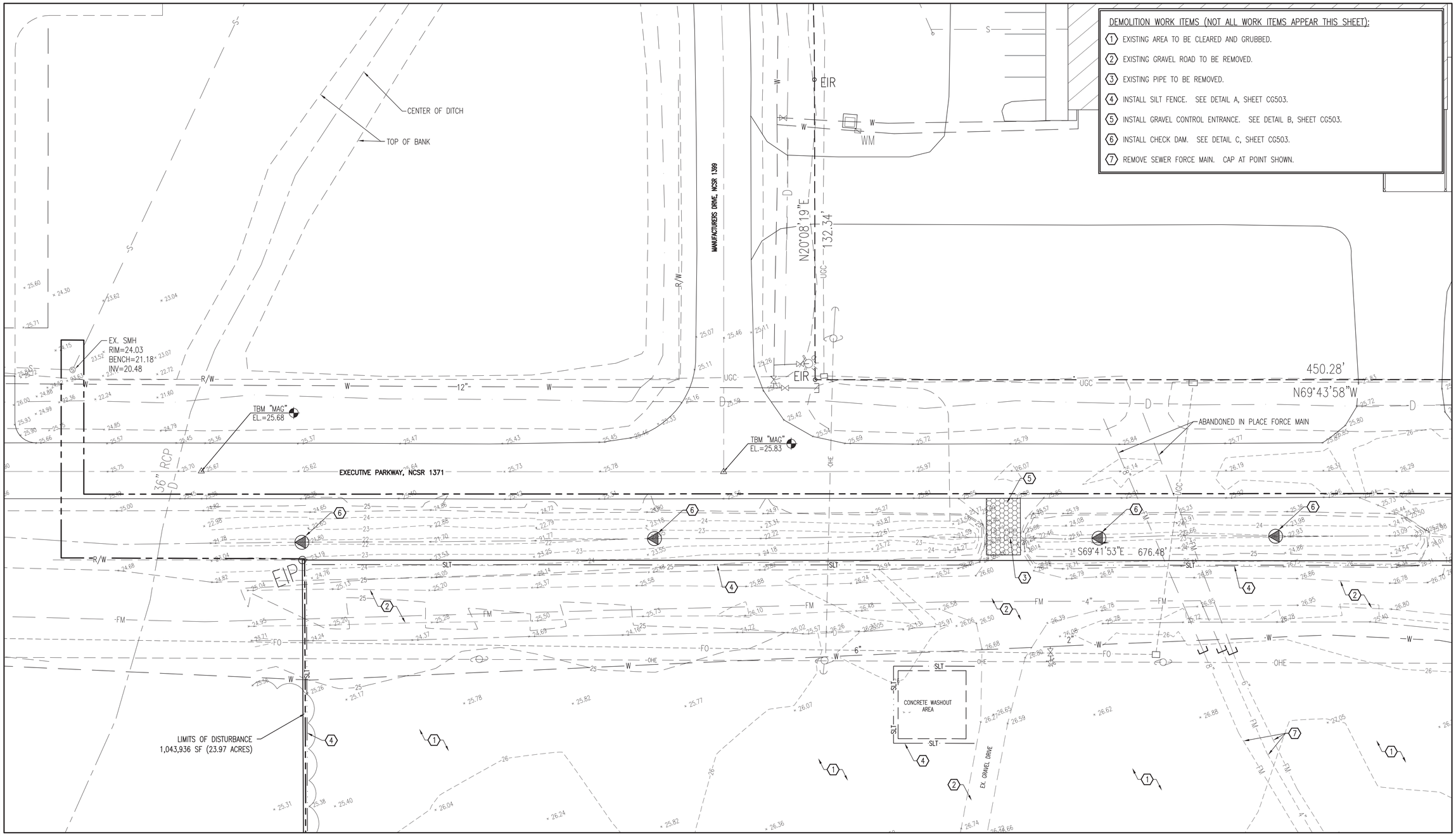

DEMOLITION WORK ITEMS (NOT ALL WORK ITEMS APPEAR THIS SHEET):

1. EXISTING AREA TO BE CLEARED AND GRUBBED.
2. EXISTING GRAVEL ROAD TO BE REMOVED.
3. EXISTING PIPE TO BE REMOVED.
4. INSTALL SILT FENCE. SEE DETAIL A, SHEET CG503.
5. INSTALL GRAVEL CONTROL ENTRANCE. SEE DETAIL B, SHEET CG503.
6. INSTALL CHECK DAM. SEE DETAIL C, SHEET CG503.
7. REMOVE SEWER FORCE MAIN. CAP AT POINT SHOWN.

A ENLARGED SITE PLAN-EXISTING CONDITIONS

SCALE: 1" = 20'

TN PN

NOTE:
SEE SHEET GI001 FOR BID ALTERNATE INFORMATION. ALL CIVIL WORK DEPICTED THIS SHEET IS BASE BID WORK UNLESS SPECIFICALLY DESIGNATED AS BID ALTERNATE WORK.

CD101	CD105	CD109
CD102	CD106	CD110
CD103	CD107	CD111
CD104	CD108	CD112

SHEET INDEX

20 0 10 20 40
GRAPHIC SCALE: 1" = 20'

AVOLIS ENGINEERING, P.A.
P.O. BOX 15564
NEW BERN, NC 28561
PH. (252) 633-0068
kevin@avoliseng.com
LICENSE NO. C-0706
A/E PROJECT #23020

WALKER the GROUP ARCHITECTURE incorporated
PO BOX 541, NEW BERN, NC 28563
2526366778

Digitally signed by John K. Avolis
NORTH CAROLINA PROFESSIONAL SEAL 15738 ENGINEER JOHN K. AVOLIS
JULY 28, 2025

PUBLIC SAFETY TRAINING CENTER

525 Executive Pkwy
New Bern, NC 28562

BID DOCUMENTS

SCO # 24-27879-01A

No.	Date	Revisions

Project Number

Date **7-28-2025**

Drawn **MSP**

Checked **JKA**

Scale **AS NOTED**

Drawing Title

ENLARGED SITE PLAN-EXISTING CONDITIONS

Sheet Number **13** of **158**

Drawing Number

CD101

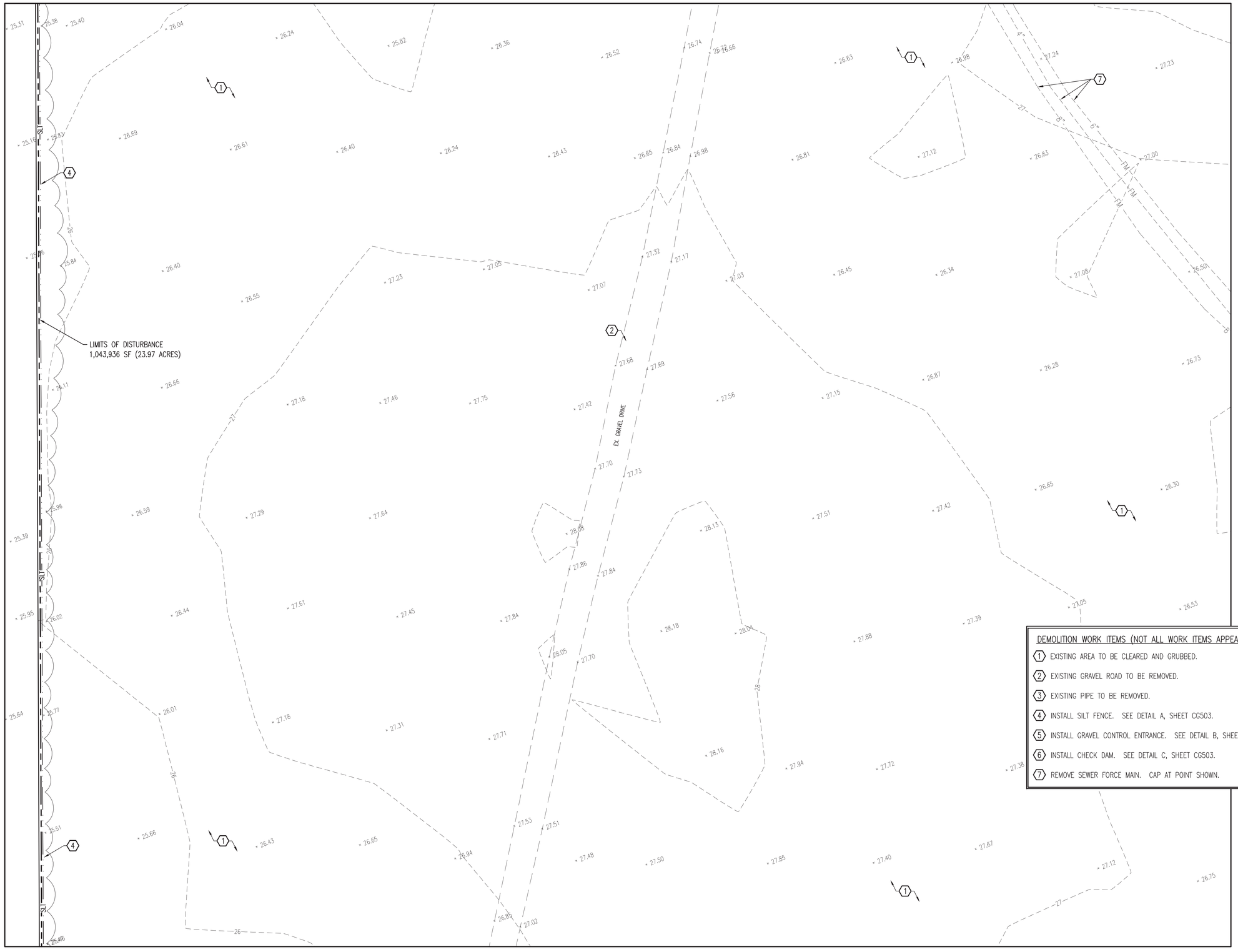

CD101	CD105	CD109
CD102	CD106	CD110
CD103	CD107	CD111
CD104	CD108	CD112

SHEET INDEX

DEMOLITION WORK ITEMS (NOT ALL WORK ITEMS APPEAR THIS SHEET):

1. EXISTING AREA TO BE CLEARED AND GRUBBED.
2. EXISTING GRAVEL ROAD TO BE REMOVED.
3. EXISTING PIPE TO BE REMOVED.
4. INSTALL SILT FENCE. SEE DETAIL A, SHEET CG503.
5. INSTALL GRAVEL CONTROL ENTRANCE. SEE DETAIL B, SHEET CG503.
6. INSTALL CHECK DAM. SEE DETAIL C, SHEET CG503.
7. REMOVE SEWER FORCE MAIN. CAP AT POINT SHOWN.

A ENLARGED SITE PLAN-EXISTING CONDITIONS

SCALE: 1" = 20'

TN PN

NOTE:
SEE SHEET GI001 FOR BID ALTERNATE INFORMATION. ALL CIVIL WORK DEPICTED THIS SHEET IS BASE BID WORK UNLESS SPECIFICALLY DESIGNATED AS BID ALTERNATE WORK.

20 0 10 20 40
GRAPHIC SCALE: 1" = 20'

LICENSE NO. C-0706
A/E PROJECT #23020
AVOLIS ENGINEERING, P.A.
P.O. BOX 15564
NEW BERN, NC 28561
PH. (252) 633-0068
kevin@avoliseng.com

WALKER the GROUP ARCHITECTURE incorporated
PO BOX 541, NEW BERN, NC 28563
2526366778

Digitally signed by John K. Avolis
NORTH CAROLINA PROFESSIONAL SEAL 15738 ENGINEER JOHN K. AVOLIS
JULY 28, 2025

PUBLIC SAFETY TRAINING CENTER

525 Executive Pkwy
New Bern, NC 28562

BID DOCUMENTS
SCO # 24-27879-01A

No.	Date	Revisions

Project Number

Date **7-28-2025**

Drawn **MSP**

Checked **JKA**

Scale **AS NOTED**

Drawing Title

ENLARGED SITE PLAN-EXISTING CONDITIONS

Sheet Number **14** of **158**

Drawing Number

CD102

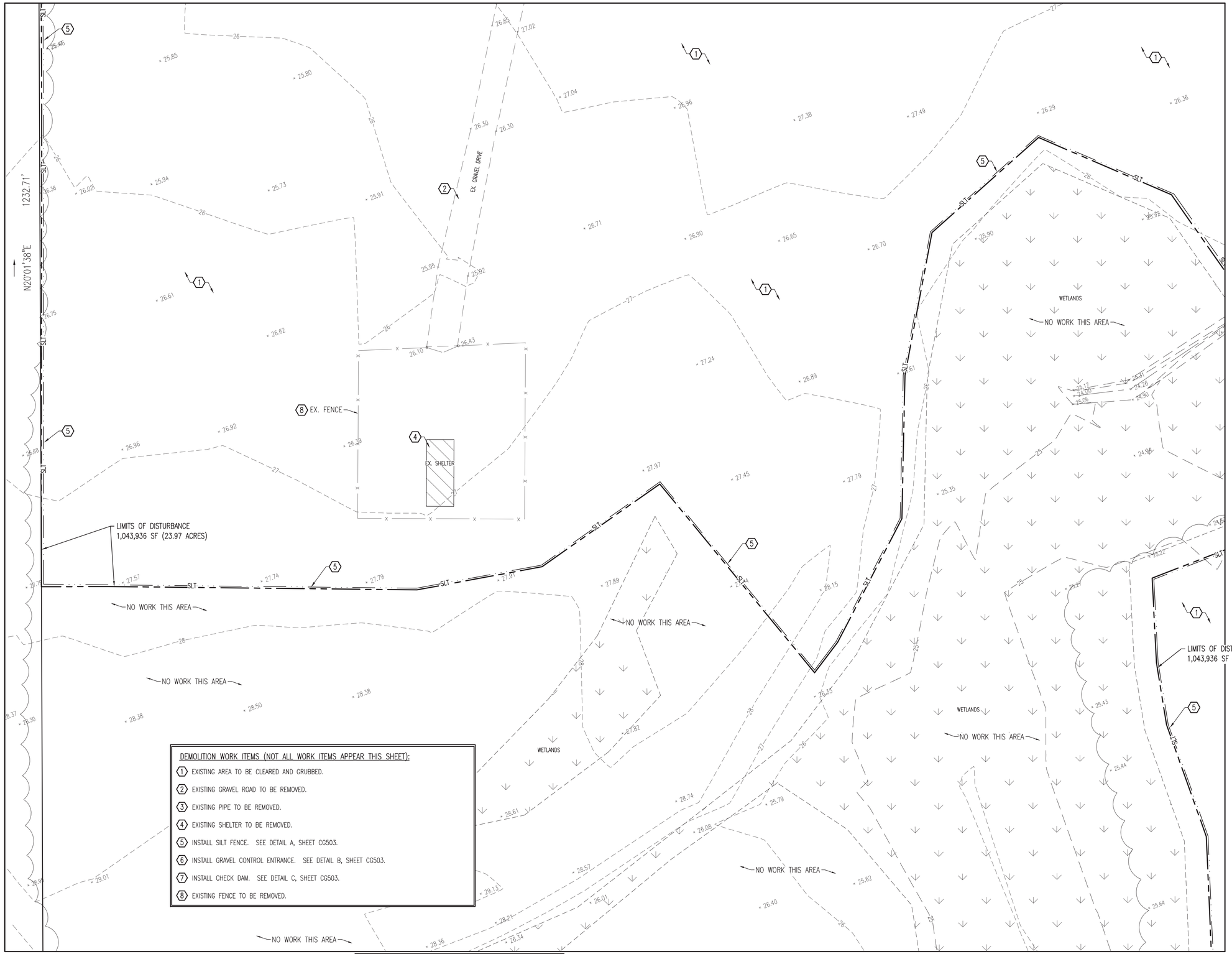

DEMOLITION WORK ITEMS (NOT ALL WORK ITEMS APPEAR THIS SHEET):

1. EXISTING AREA TO BE CLEARED AND GRUBBED.
2. EXISTING GRAVEL ROAD TO BE REMOVED.
3. EXISTING PIPE TO BE REMOVED.
4. EXISTING SHELTER TO BE REMOVED.
5. INSTALL SILT FENCE. SEE DETAIL A, SHEET CG503.
6. INSTALL GRAVEL CONTROL ENTRANCE. SEE DETAIL B, SHEET CG503.
7. INSTALL CHECK DAM. SEE DETAIL C, SHEET CG503.
8. EXISTING FENCE TO BE REMOVED.

A ENLARGED SITE PLAN-EXISTING CONDITIONS

SCALE: 1" = 20'

TN PN

NOTE:
SEE SHEET GI001 FOR BID ALTERNATE INFORMATION. ALL CIVIL WORK DEPICTED THIS SHEET IS BASE BID WORK UNLESS SPECIFICALLY DESIGNATED AS BID ALTERNATE WORK.

20 0 10 20 40
GRAPHIC SCALE: 1" = 20'

LICENSE NO. C-0706
A/E PROJECT #23020
AVOLIS ENGINEERING, P.A.
P.O. BOX 15564
NEW BERN, NC 28561
PH. (252) 633-0068
kevin@avoliseng.com

CD101	CD105	CD109
CD102	CD106	CD110
CD103	CD107	CD111
CD104	CD108	CD112

SHEET INDEX

WALKER the GROUP ARCHITECTURE incorporated
PO BOX 541, NEW BERN, NC 28563
2526366778

Digitally signed by John K. Avolis
NORTH CAROLINA PROFESSIONAL SEAL 15738 ENGINEER JOHN K. AVOLIS
JULY 28, 2025

PUBLIC SAFETY TRAINING CENTER

525 Executive Pkwy
New Bern, NC 28562

BID DOCUMENTS
SCO # 24-27879-01A

No.	Date	Revisions

Project Number

Date **7-28-2025**

Drawn **MSP**

Checked **JKA**

Scale **AS NOTED**

Drawing Title

ENLARGED SITE PLAN-EXISTING CONDITIONS

Sheet Number **15** of **158**

Drawing Number

CD103

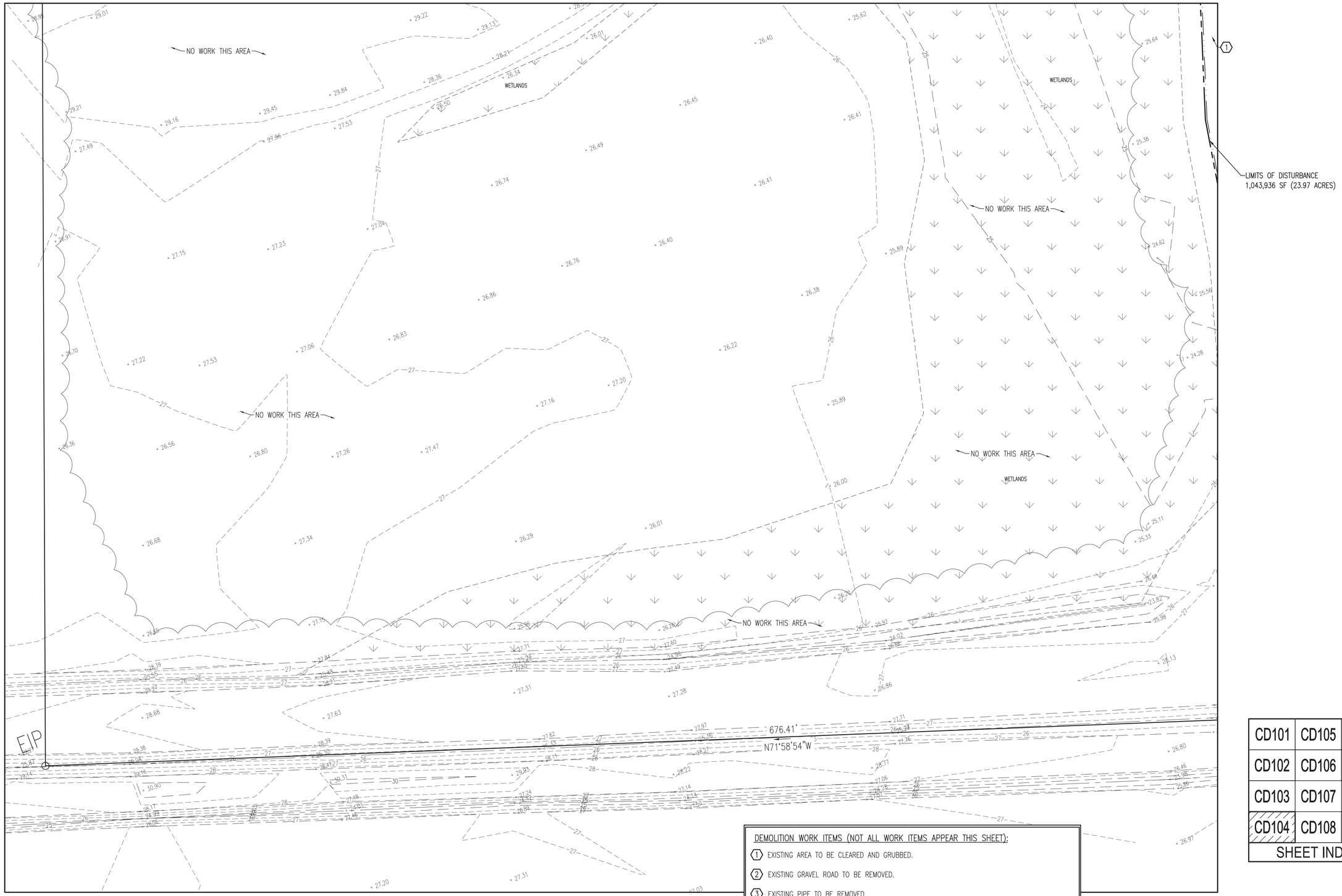

A ENLARGED SITE PLAN-EXISTING CONDITIONS

SCALE: 1" = 20'

TN PN

NOTE:
SEE SHEET GI001 FOR BID ALTERNATE INFORMATION.
ALL CIVIL WORK DEPICTED THIS SHEET IS BASE BID WORK UNLESS SPECIFICALLY DESIGNATED AS BID ALTERNATE WORK.

DEMOLITION WORK ITEMS (NOT ALL WORK ITEMS APPEAR THIS SHEET):

1. EXISTING AREA TO BE CLEARED AND GRUBBED.
2. EXISTING GRAVEL ROAD TO BE REMOVED.
3. EXISTING PIPE TO BE REMOVED.
4. INSTALL SILT FENCE. SEE DETAIL A, SHEET CC503.
5. INSTALL GRAVEL CONTROL ENTRANCE. SEE DETAIL B, SHEET CC503.
6. INSTALL CHECK DAM. SEE DETAIL C, SHEET CC503.
7. REMOVE SEWER FORCE MAIN. CAP AT POINT SHOWN.

CD101	CD105	CD109
CD102	CD106	CD110
CD103	CD107	CD111
CD104	CD108	CD112

SHEET INDEX

20 0 10 20 40
GRAPHIC SCALE: 1" = 20'

LICENSE NO. C-0706
A/E PROJECT #23020
AVOLIS ENGINEERING, P.A.
P.O. BOX 15564
NEW BERN, NC 28561
PH. (252) 633-0068
kevin@avoliseng.com

WALKER the GROUP ARCHITECTURE incorporated
PO BOX 541, NEW BERN, NC 28563
2526366778

Digitally signed by John K. Avolis
NORTH CAROLINA PROFESSIONAL SEAL 15738 ENGINEER JOHN K. AVOLIS
JULY 28, 2025

PUBLIC SAFETY TRAINING CENTER

525 Executive Pkwy
New Bern, NC 28562

BID DOCUMENTS
SCO # 24-27879-01A

Revisions
No. Date

Project Number
Date **7-28-2025**
Drawn **MSP**
Checked **JKA**
Scale **AS NOTED**
Drawing Title

ENLARGED SITE PLAN-EXISTING CONDITIONS

Sheet Number **16** of **158**
Drawing Number
CD104

CD101	CD105	CD109
CD102	CD106	CD110
CD103	CD107	CD111
CD104	CD108	CD112

SHEET INDEX

DEMOLITION WORK ITEMS (NOT ALL WORK ITEMS APPEAR THIS SHEET):

1. EXISTING AREA TO BE CLEARED AND GRUBBED.
2. EXISTING GRAVEL ROAD TO BE REMOVED.
3. EXISTING PIPE TO BE REMOVED.
4. INSTALL SILT FENCE. SEE DETAIL A, SHEET CG503.
5. INSTALL GRAVEL CONTROL ENTRANCE. SEE DETAIL B, SHEET CG503.
6. INSTALL CHECK DAM. SEE DETAIL C, SHEET CG503.
7. REMOVE SEWER FORCE MAIN. CAP AT POINT SHOWN.

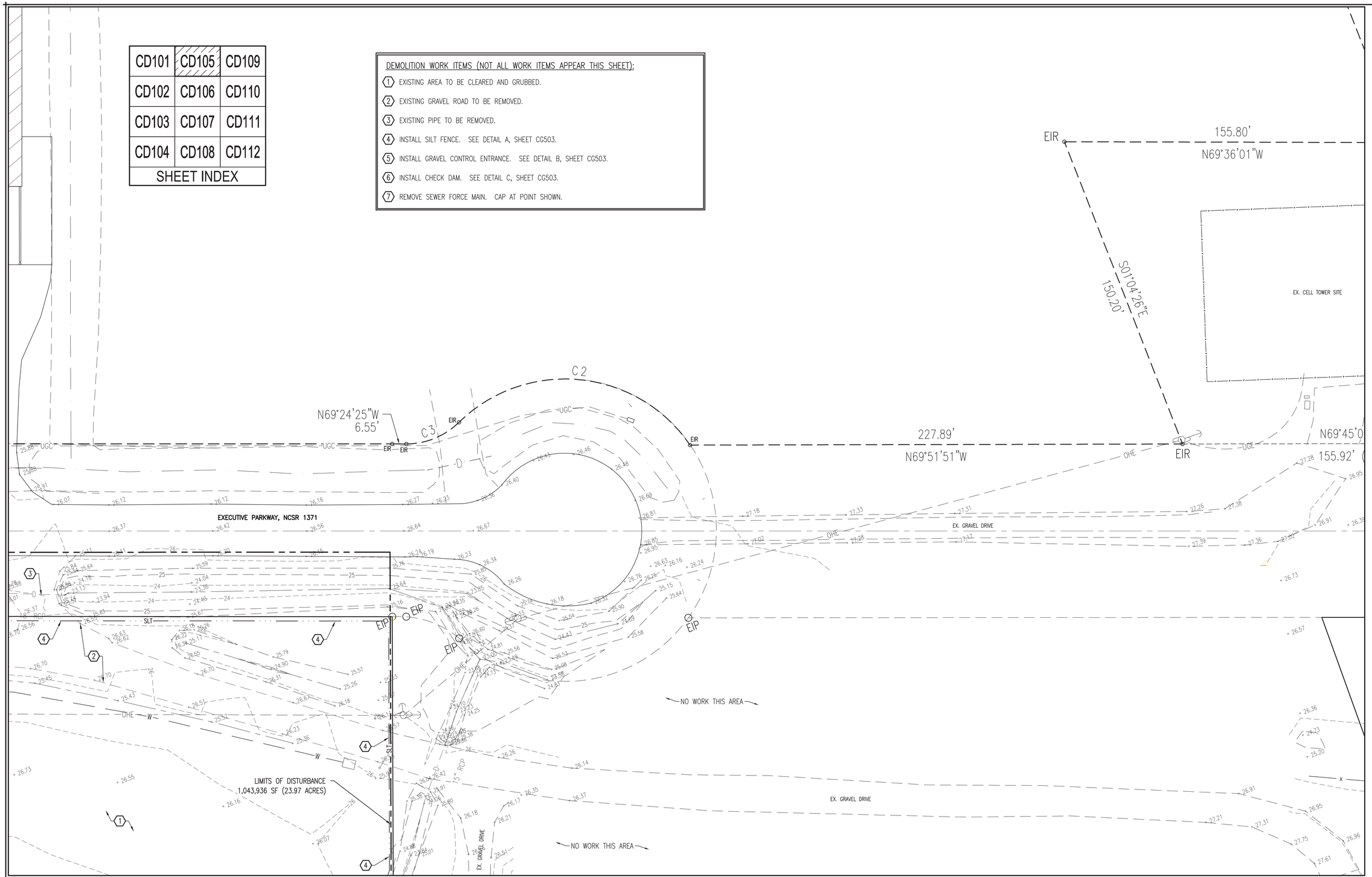

A ENLARGED SITE PLAN-EXISTING CONDITIONS

SCALE: 1" = 20'

TN PN

NOTE:
SEE SHEET GI001 FOR BID ALTERNATE INFORMATION. ALL CIVIL WORK DEPICTED THIS SHEET IS BASE BID WORK UNLESS SPECIFICALLY DESIGNATED AS BID ALTERNATE WORK.

20 0 10 20 40

GRAPHIC SCALE: 1" = 20'

AVOLIS ENGINEERING, P.A.
P.O. BOX 15564
NEW BERN, NC 28561
PH. (252) 633-0068
kevin@avoliseng.com
LICENSE NO. C-0706
A/E PROJECT #23020

WALKER the GROUP ARCHITECTURE incorporated
PO BOX 541, NEW BERN, NC 28563
2526366778

Digitally signed by John K. Avolis
NORTH CAROLINA PROFESSIONAL SEAL 15738 ENGINEER JOHN K. AVOLIS
JULY 28, 2025

PUBLIC SAFETY TRAINING CENTER

525 Executive Pkwy
New Bern, NC 28562

BID DOCUMENTS

SCO # 24-27879-01A

No.	Date	Revisions

Project Number

Date **7-28-2025**

Drawn **MSP**

Checked **JKA**

Scale **AS NOTED**

Drawing Title

ENLARGED SITE PLAN-EXISTING CONDITIONS

Sheet Number **17** of **158**

Drawing Number

CD105

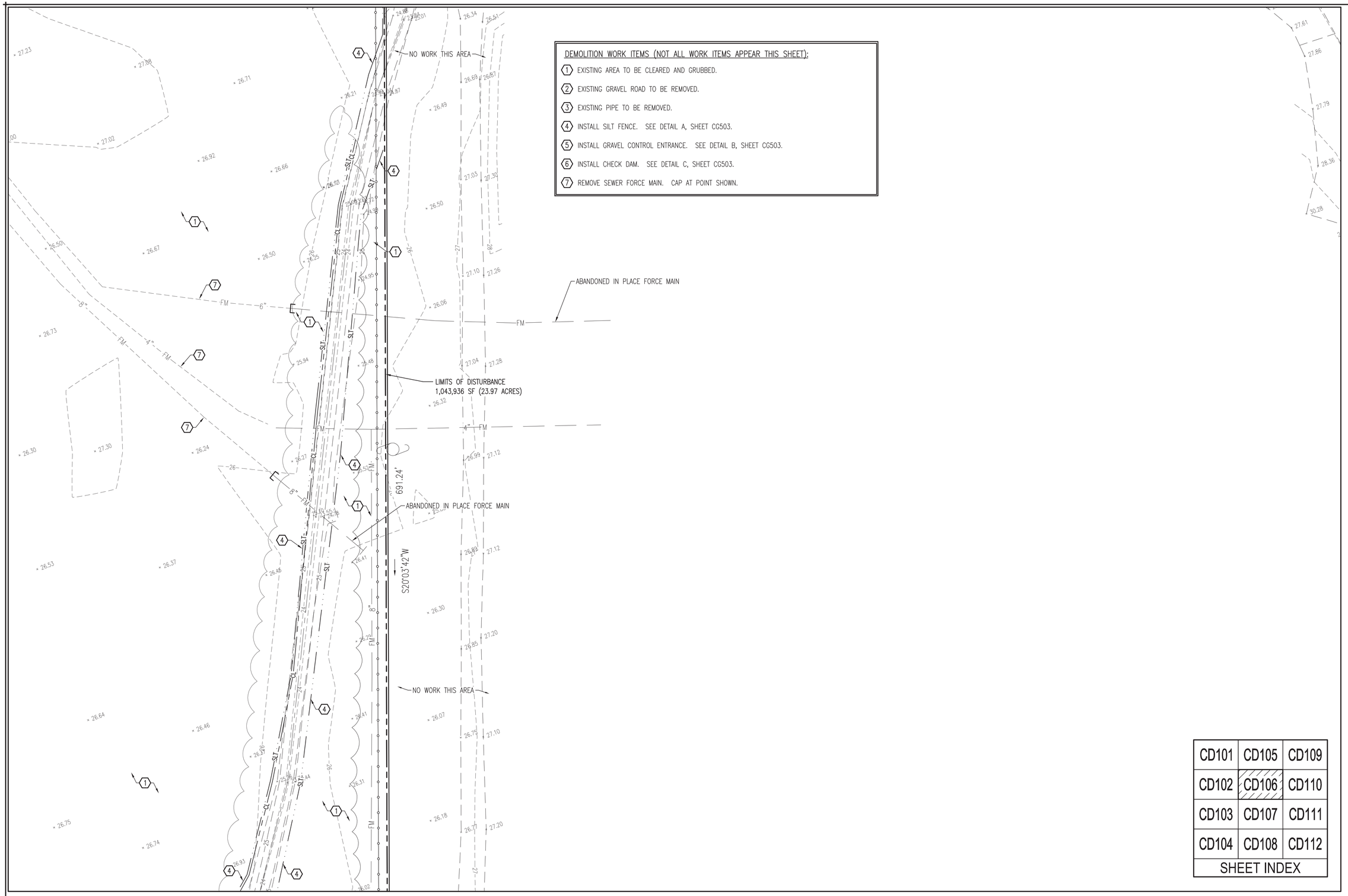

DEMOLITION WORK ITEMS (NOT ALL WORK ITEMS APPEAR THIS SHEET):

1. EXISTING AREA TO BE CLEARED AND GRUBBED.
2. EXISTING GRAVEL ROAD TO BE REMOVED.
3. EXISTING PIPE TO BE REMOVED.
4. INSTALL SILT FENCE. SEE DETAIL A, SHEET CG503.
5. INSTALL GRAVEL CONTROL ENTRANCE. SEE DETAIL B, SHEET CG503.
6. INSTALL CHECK DAM. SEE DETAIL C, SHEET CG503.
7. REMOVE SEWER FORCE MAIN. CAP AT POINT SHOWN.

CD101	CD105	CD109
CD102	CD106	CD110
CD103	CD107	CD111
CD104	CD108	CD112

SHEET INDEX

A ENLARGED SITE PLAN-EXISTING CONDITIONS
SCALE: 1" = 20'

TN PN

NOTE:
SEE SHEET GI001 FOR BID ALTERNATE INFORMATION.
ALL CIVIL WORK DEPICTED THIS SHEET IS BASE BID WORK UNLESS SPECIFICALLY DESIGNATED AS BID ALTERNATE WORK.

20 0 10 20 40
GRAPHIC SCALE: 1" = 20'

AVOLIS ENGINEERING, P.A.
P.O. BOX 15564
NEW BERN, NC 28561
PH. (252) 633-0068
kevin@avoliseng.com
LICENSE NO. C-0706
A/E PROJECT #23020

WALKER the GROUP ARCHITECTURE incorporated
PO BOX 541, NEW BERN, NC 28563
2526366778

Digitally signed by John K. Avolis
NORTH CAROLINA PROFESSIONAL SEAL 15738 ENGINEER JOHN K. AVOLIS
JULY 28, 2025

PUBLIC SAFETY TRAINING CENTER

525 Executive Pkwy
New Bern, NC 28562

BID DOCUMENTS
SCO # 24-27879-01A

No.	Date	Revisions

Project Number
Date **7-28-2025**
Drawn **MSP**
Checked **JKA**
Scale **AS NOTED**
Drawing Title
ENLARGED SITE PLAN-EXISTING CONDITIONS

Sheet Number **18** of **158**
Drawing Number
CD106

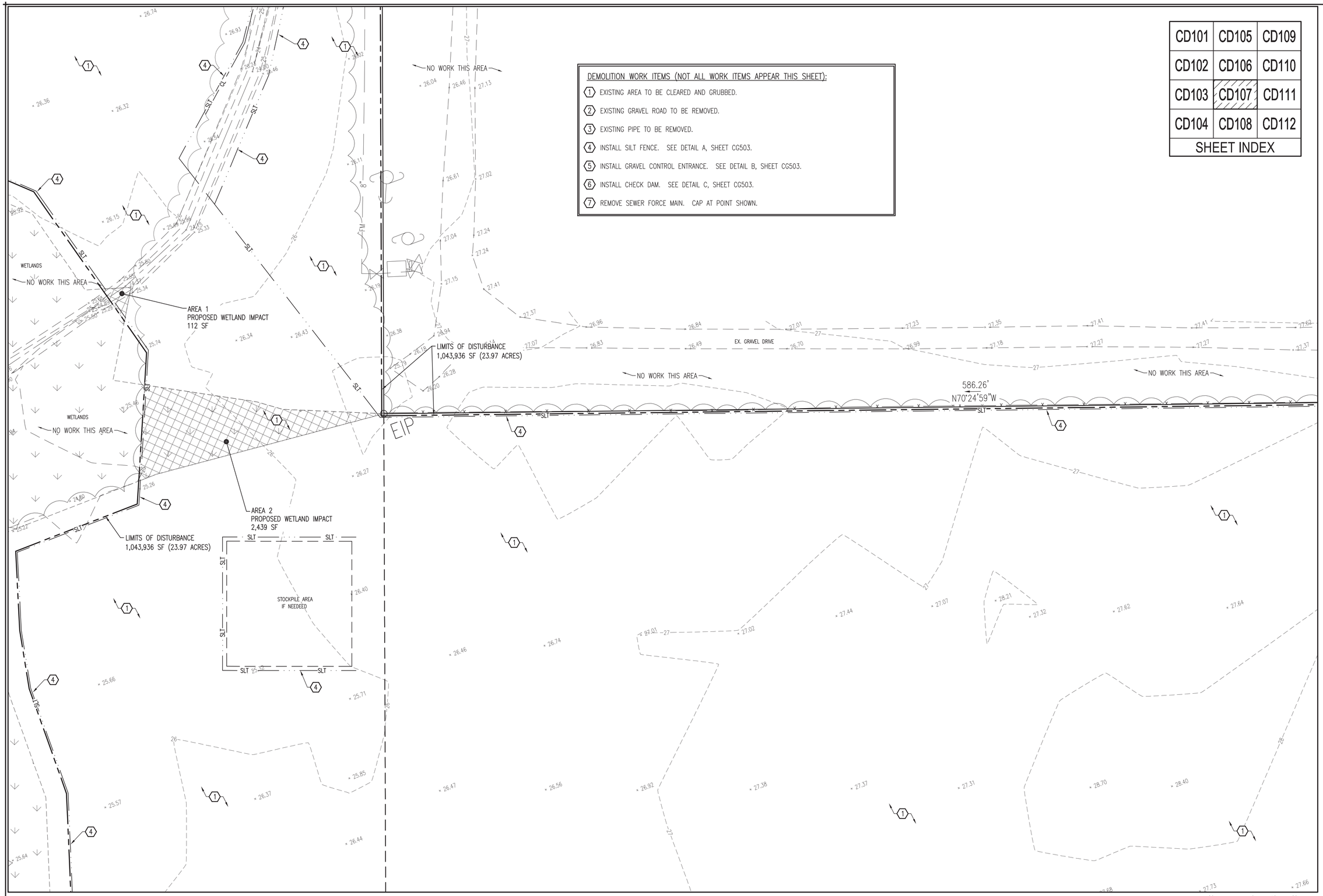

DEMOLITION WORK ITEMS (NOT ALL WORK ITEMS APPEAR THIS SHEET):

1. EXISTING AREA TO BE CLEARED AND GRUBBED.
2. EXISTING GRAVEL ROAD TO BE REMOVED.
3. EXISTING PIPE TO BE REMOVED.
4. INSTALL SILT FENCE. SEE DETAIL A, SHEET CG503.
5. INSTALL GRAVEL CONTROL ENTRANCE. SEE DETAIL B, SHEET CG503.
6. INSTALL CHECK DAM. SEE DETAIL C, SHEET CG503.
7. REMOVE SEWER FORCE MAIN. CAP AT POINT SHOWN.

CD101	CD105	CD109
CD102	CD106	CD110
CD103	CD107	CD111
CD104	CD108	CD112

SHEET INDEX

A ENLARGED SITE PLAN-EXISTING CONDITIONS

SCALE: 1" = 20'

TN PN

NOTE:
SEE SHEET GI001 FOR BID ALTERNATE INFORMATION. ALL CIVIL WORK DEPICTED THIS SHEET IS BASE BID WORK UNLESS SPECIFICALLY DESIGNATED AS BID ALTERNATE WORK.

20 0 10 20 40
GRAPHIC SCALE: 1" = 20'

LICENSE NO. C-0706
A/E PROJECT #23020
AVOLIS ENGINEERING, P.A.
P.O. BOX 15564
NEW BERN, NC 28561
PH. (252) 633-0068
kevin@avoliseng.com

WALKER the GROUP ARCHITECTURE incorporated
PO BOX 541, NEW BERN, NC 28563
2526366778

Digitally signed by John K. Avolis
NORTH CAROLINA PROFESSIONAL SEAL 15738 ENGINEER JOHN K. AVOLIS
JULY 28, 2025

PUBLIC SAFETY TRAINING CENTER

525 Executive Pkwy
New Bern, NC 28562

BID DOCUMENTS
SCO # 24-27879-01A

No.	Date	Revisions

Project Number

Date **7-28-2025**

Drawn **MSP**

Checked **JKA**

Scale **AS NOTED**

Drawing Title

ENLARGED SITE PLAN-EXISTING CONDITIONS

Sheet Number **19** of **158**

Drawing Number

CD107

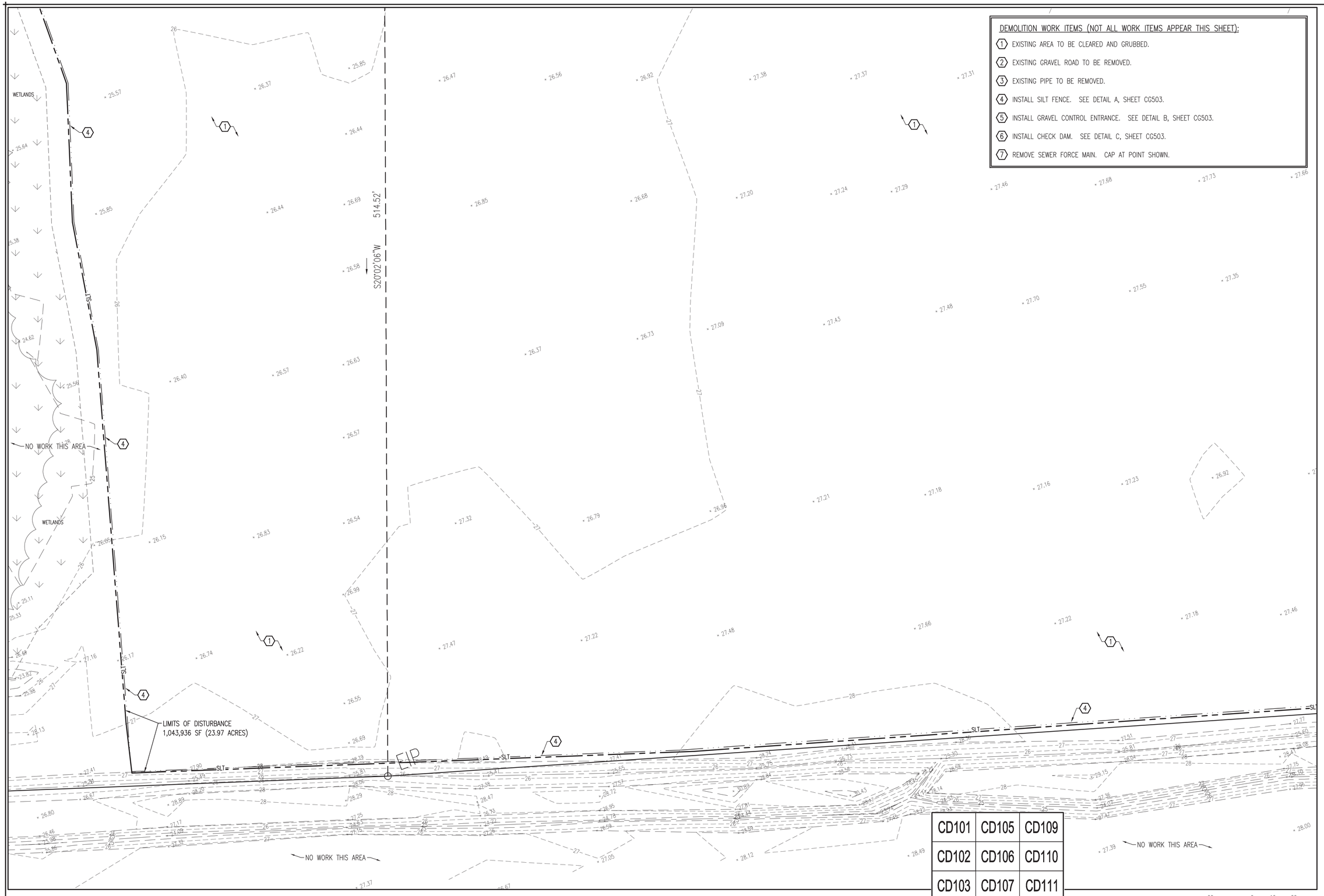

DEMOLITION WORK ITEMS (NOT ALL WORK ITEMS APPEAR THIS SHEET):

1. EXISTING AREA TO BE CLEARED AND GRUBBED.
2. EXISTING GRAVEL ROAD TO BE REMOVED.
3. EXISTING PIPE TO BE REMOVED.
4. INSTALL SILT FENCE. SEE DETAIL A, SHEET CG503.
5. INSTALL GRAVEL CONTROL ENTRANCE. SEE DETAIL B, SHEET CG503.
6. INSTALL CHECK DAM. SEE DETAIL C, SHEET CG503.
7. REMOVE SEWER FORCE MAIN. CAP AT POINT SHOWN.

CD101	CD105	CD109
CD102	CD106	CD110
CD103	CD107	CD111
CD104	CD108	CD112

SHEET INDEX

A ENLARGED SITE PLAN-EXISTING CONDITIONS

SCALE: 1" = 20'

TN PN

NOTE:
SEE SHEET GI001 FOR BID ALTERNATE INFORMATION. ALL CIVIL WORK DEPICTED THIS SHEET IS BASE BID WORK UNLESS SPECIFICALLY DESIGNATED AS BID ALTERNATE WORK.

20 0 10 20 40
GRAPHIC SCALE: 1" = 20'

LICENSE NO. C-0706
A/E PROJECT #23020
AVOLIS ENGINEERING, P.A.
P.O. BOX 15564
NEW BERN, NC 28561
PH. (252) 633-0068
kevin@avoliseng.com

WALKER the GROUP ARCHITECTURE incorporated
PO BOX 541, NEW BERN, NC 28563
2526366778

Digitally signed by John K Avolis
NORTH CAROLINA PROFESSIONAL SEAL 15738 ENGINEER JOHN K AVOLIS
JULY 28, 2025

PUBLIC SAFETY TRAINING CENTER

525 Executive Pkwy
New Bern, NC 28562

BID DOCUMENTS
SCO # 24-27879-01A

No.	Date	Revisions

Project Number

Date **7-28-2025**

Drawn **MSP**

Checked **JKA**

Scale **AS NOTED**

Drawing Title

ENLARGED SITE PLAN-EXISTING CONDITIONS

Sheet Number **20** Of **158**

Drawing Number

CD108

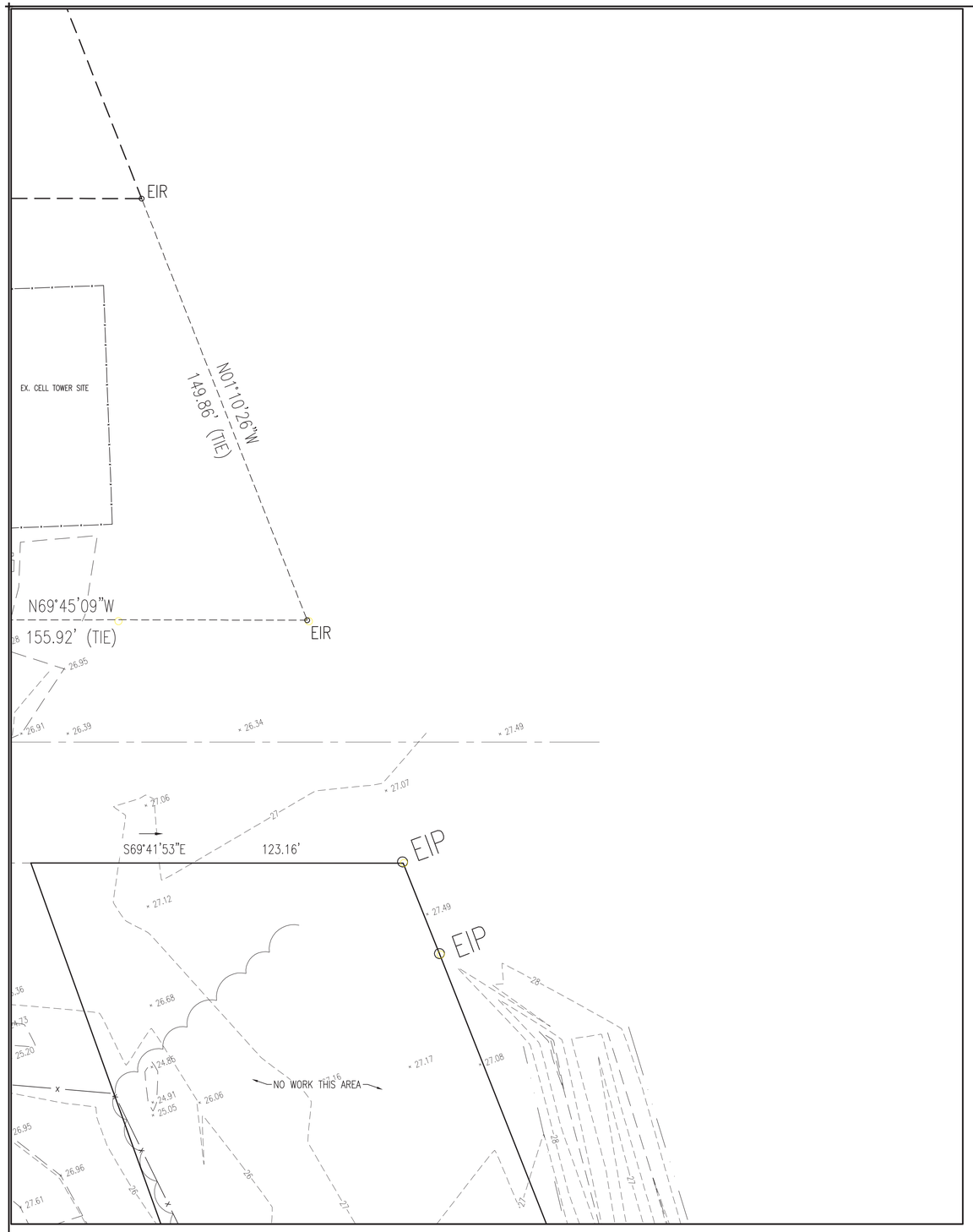

A ENLARGED SITE PLAN-EXISTING CONDITIONS

SCALE: 1" = 20'

TN PN

NOTE:
SEE SHEET GI001 FOR BID ALTERNATE INFORMATION. ALL CIVIL WORK DEPICTED THIS SHEET IS BASE BID WORK UNLESS SPECIFICALLY DESIGNATED AS BID ALTERNATE WORK.

DEMOLITION WORK ITEMS (NOT ALL WORK ITEMS APPEAR THIS SHEET):

1. EXISTING AREA TO BE CLEARED AND GRUBBED.
2. EXISTING GRAVEL ROAD TO BE REMOVED.
3. EXISTING PIPE TO BE REMOVED.
4. INSTALL SILT FENCE. SEE DETAIL A, SHEET CG503.
5. INSTALL GRAVEL CONTROL ENTRANCE. SEE DETAIL B, SHEET CG503.
6. INSTALL CHECK DAM. SEE DETAIL C, SHEET CG503.
7. REMOVE SEWER FORCE MAIN. CAP AT POINT SHOWN.

CD101	CD105	CD109
CD102	CD106	CD110
CD103	CD107	CD111
CD104	CD108	CD112

SHEET INDEX

20 0 10 20 40
GRAPHIC SCALE: 1" = 20'

LICENSE NO. C-0706
A/E PROJECT #23020
AVOLIS ENGINEERING, P.A.
P.O. BOX 15564
NEW BERN, NC 28561
PH. (252) 633-0068
kevin@avoliseng.com

WALKER the GROUP ARCHITECTURE incorporated
PO BOX 541, NEW BERN, NC 28563
2526366778

Digitally signed by John K. Avolis
NORTH CAROLINA PROFESSIONAL SEAL 15738 ENGINEER JOHN K. AVOLIS
JULY 28, 2025

PUBLIC SAFETY TRAINING CENTER

525 Executive Pkwy
New Bern, NC 28562

BID DOCUMENTS
SCO # 24-27879-01A

No.	Date	Revisions

Project Number

Date **7-28-2025**

Drawn **MSP**

Checked **JKA**

Scale **AS NOTED**

Drawing Title

ENLARGED SITE PLAN-EXISTING CONDITIONS

Sheet Number **21** of **158**

Drawing Number

CD109

CD101	CD105	CD109
CD102	CD106	CD110
CD103	CD107	CD111
CD104	CD108	CD112

SHEET INDEX

DEMOLITION WORK ITEMS (NOT ALL WORK ITEMS APPEAR THIS SHEET):

1. EXISTING AREA TO BE CLEARED AND GRUBBED.
2. EXISTING GRAVEL ROAD TO BE REMOVED.
3. EXISTING PIPE TO BE REMOVED.
4. INSTALL SILT FENCE. SEE DETAIL A, SHEET CG503.
5. INSTALL GRAVEL CONTROL ENTRANCE. SEE DETAIL B, SHEET CG503.
6. INSTALL CHECK DAM. SEE DETAIL C, SHEET CG503.
7. REMOVE SEWER FORCE MAIN. CAP AT POINT SHOWN.

A ENLARGED SITE PLAN-EXISTING CONDITIONS

SCALE: 1" = 20'

TN PN

NOTE:
SEE SHEET GI001 FOR BID ALTERNATE INFORMATION. ALL CIVIL WORK DEPICTED THIS SHEET IS BASE BID WORK UNLESS SPECIFICALLY DESIGNATED AS BID ALTERNATE WORK.

20 0 10 20 40

GRAPHIC SCALE: 1" = 20'

LICENSE NO. C-0706
A/E PROJECT #23020

AVOLIS ENGINEERING, P.A.
P.O. BOX 15564
NEW BERN, NC 28561
PH. (252) 633-0068
kevin@avoliseng.com

WALKER the GROUP ARCHITECTURE incorporated
PO BOX 541, NEW BERN, NC 28563
2526366778

Digitally signed by John K. Avolis

NORTH CAROLINA PROFESSIONAL SEAL 15738 ENGINEER JOHN K. AVOLIS

JULY 28, 2025

PUBLIC SAFETY TRAINING CENTER

525 Executive Pkwy
New Bern, NC 28562

BID DOCUMENTS

SCO # 24-27879-01A

No.	Date	Revisions

Project Number

Date **7-28-2025**

Drawn **MSP**

Checked **JKA**

Scale **AS NOTED**

Drawing Title

ENLARGED SITE PLAN-EXISTING CONDITIONS

Sheet Number **22** of **158**

Drawing Number

CD110

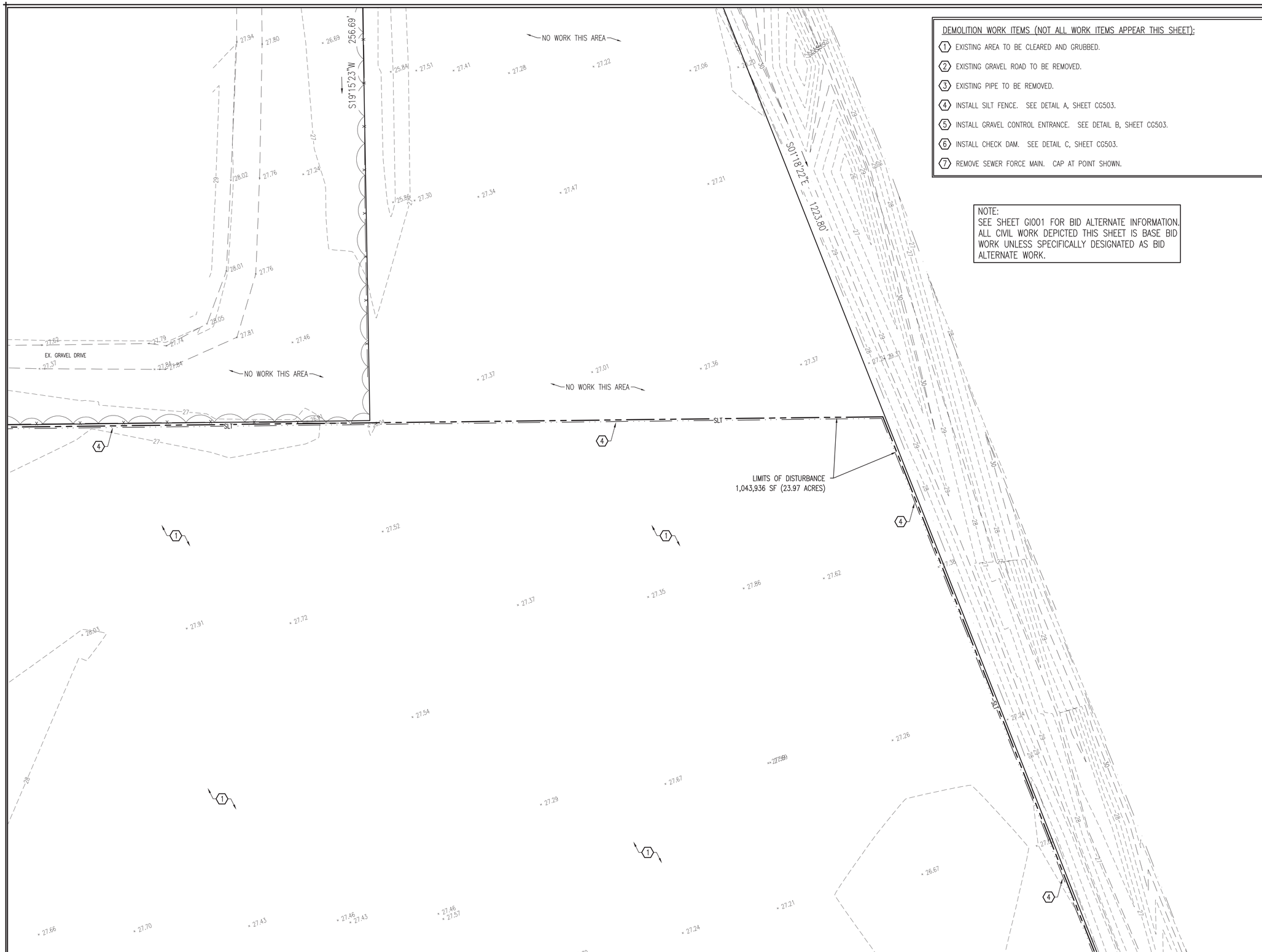

DEMOLITION WORK ITEMS (NOT ALL WORK ITEMS APPEAR THIS SHEET):

1. EXISTING AREA TO BE CLEARED AND GRUBBED.
2. EXISTING GRAVEL ROAD TO BE REMOVED.
3. EXISTING PIPE TO BE REMOVED.
4. INSTALL SILT FENCE. SEE DETAIL A, SHEET CG503.
5. INSTALL GRAVEL CONTROL ENTRANCE. SEE DETAIL B, SHEET CG503.
6. INSTALL CHECK DAM. SEE DETAIL C, SHEET CG503.
7. REMOVE SEWER FORCE MAIN. CAP AT POINT SHOWN.

NOTE:
SEE SHEET GI001 FOR BID ALTERNATE INFORMATION. ALL CIVIL WORK DEPICTED THIS SHEET IS BASE BID WORK UNLESS SPECIFICALLY DESIGNATED AS BID ALTERNATE WORK.

CD101	CD105	CD109
CD102	CD106	CD110
CD103	CD107	CD111
CD104	CD108	CD112

SHEET INDEX

A ENLARGED SITE PLAN-EXISTING CONDITIONS
SCALE: 1" = 20'

TN PN

GRAPHIC SCALE: 1" = 20'

AVOLIS ENGINEERING, P.A.
P.O. BOX 15564
NEW BERN, NC 28561
PH. (252) 633-0068
kevin@avoliseng.com
LICENSE NO. C-0706
A/E PROJECT #23020

WALKER the GROUP ARCHITECTURE incorporated
PO BOX 541, NEW BERN, NC 28563
2526366778

Digitally signed by John K. Avolis
NORTH CAROLINA PROFESSIONAL SEAL 15738 ENGINEER JOHN K. AVOLIS
JULY 28, 2025

PUBLIC SAFETY TRAINING CENTER

525 Executive Pkwy
New Bern, NC 28562

BID DOCUMENTS
SCO # 24-27879-01A

No.	Date	Revisions

Project Number

Date **7-28-2025**

Drawn **MSP**

Checked **JKA**

Scale **AS NOTED**

Drawing Title

ENLARGED SITE PLAN-EXISTING CONDITIONS

Sheet Number **23** of **158**

Drawing Number

CD111

NOTE:
SEE SHEET GI001 FOR BID ALTERNATE INFORMATION. ALL CIVIL WORK DEPICTED THIS SHEET IS BASE BID WORK UNLESS SPECIFICALLY DESIGNATED AS BID ALTERNATE WORK.

A ENLARGED SITE PLAN-EXISTING CONDITIONS

SCALE: 1" = 20'

TN PN

DEMOLITION WORK ITEMS (NOT ALL WORK ITEMS APPEAR THIS SHEET):

1. EXISTING AREA TO BE CLEARED AND GRUBBED.
2. EXISTING GRAVEL ROAD TO BE REMOVED.
3. EXISTING PIPE TO BE REMOVED.
4. INSTALL SILT FENCE. SEE DETAIL A, SHEET CG503.
5. INSTALL GRAVEL CONTROL ENTRANCE. SEE DETAIL B, SHEET CG503.
6. INSTALL CHECK DAM. SEE DETAIL C, SHEET CG503.
7. REMOVE SEWER FORCE MAIN. CAP AT POINT SHOWN.

CD101	CD105	CD109
CD102	CD106	CD110
CD103	CD107	CD111
CD104	CD108	CD112

SHEET INDEX

20 0 10 20 40
GRAPHIC SCALE: 1" = 20'

AVOLIS ENGINEERING, P.A.
P.O. BOX 15564
NEW BERN, NC 28561
PH. (252) 633-0068
kevin@avoliseng.com
LICENSE NO. C-0706
A/E PROJECT #23020

WALKER the GROUP ARCHITECTURE incorporated
PO BOX 541, NEW BERN, NC 28563
2526366778

Digitally signed by John K. Avolis
NORTH CAROLINA PROFESSIONAL SEAL 15738 ENGINEER JOHN K. AVOLIS
JULY 28, 2025

PUBLIC SAFETY TRAINING CENTER

525 Executive Pkwy
New Bern, NC 28562

BID DOCUMENTS

SCO # 24-27879-01A

No.	Date	Revisions

Project Number

Date **7-28-2025**

Drawn **MSP**

Checked **JKA**

Scale **AS NOTED**

Drawing Title

ENLARGED SITE PLAN-EXISTING CONDITIONS

Sheet Number **24** of **158**

Drawing Number

CD112

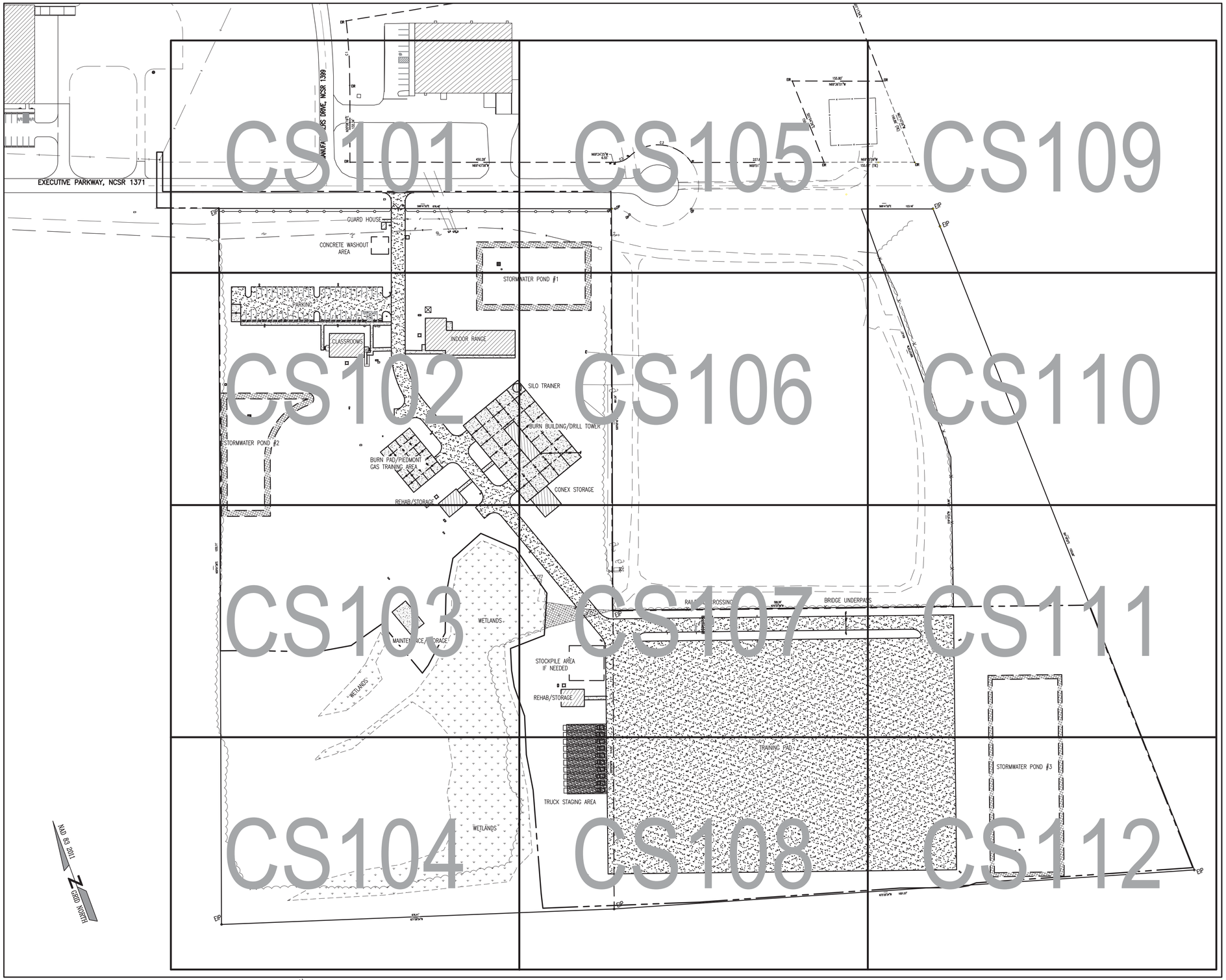

A OVERALL SITE PLAN-PROPOSED CONDITIONS
SCALE: 1" = 80'

TN PN

80 0 40 80 160
GRAPHIC SCALE: 1" = 80'

AVOLIS ENGINEERING, P.A.
P.O. BOX 15564
NEW BERN, NC 28561
PH. (252) 633-0068
kevin@avoliseng.com
LICENSE NO. C-0706
A/E PROJECT #23020

WALKER the GROUP ARCHITECTURE incorporated
PO BOX 541, NEW BERN, NC 28563
2526366778

Digitally signed by John K. Avolis
NORTH CAROLINA PROFESSIONAL SEAL 15738 ENGINEER JOHN K. AVOLIS
JULY 28, 2025

PUBLIC SAFETY TRAINING CENTER

525 Executive Pkwy
New Bern, NC 28562

BID DOCUMENTS
SCO # 24-27879-01A

Revisions

No.	Date

Project Number

Date
7-28-2025

Drawn
MSP

Checked
JKA

Scale
AS NOTED

Drawing Title
OVERALL SITE PLAN-PROPOSED CONDITIONS

Sheet Number
25 of **158**

Drawing Number
CS100

SPECIFIC WORK ITEMS (NOT ALL WORK ITEMS APPEAR ON EACH SHEET):

1. ASPHALT ROADWAY – SEE DETAIL A AND B, SHEET CS501. PROVIDE HEAVY DUTY PAVEMENT SECTION.
2. ASPHALT PAVEMENT – SEE DETAIL B, SHEET CS501. PROVIDE STANDARD DUTY PAVEMENT SECTION.
3. GRAVEL SURFACING – SEE DETAIL C, SHEET CS501.
4. PROVIDE WHEEL STOP – SEE DETAIL C, SHEET CS502.
5. PROVIDE ACCESSIBLE MARKINGS AND SIGNAGE – SEE DETAIL B, SHEET CS502.
6. PROVIDE STEEL BOLLARD – SEE DETAIL A, SHEET CS503.
7. CONCRETE SIDEWALK – SEE DETAIL B, SHEET CS503.
8. CONCRETE APRON – SEE DETAIL C, SHEET CS503.
9. SECURITY CHAIN LINK FENCE – SEE DETAIL A, SHEET CS504.
10. SIMULATED RAILROAD CROSSING – SEE DETAIL A, SHEET CS505.
11. SIMULATED BRIDGE OVERPASS – SEE DETAIL B, SHEET CS505.
12. SIGN TYPE AS INDICATED – SEE DETAIL D, SHEET CS502.
13. PAVEMENT MARKING, TYPE AS INDICATED – SEE DETAIL C, SHEET CS502.

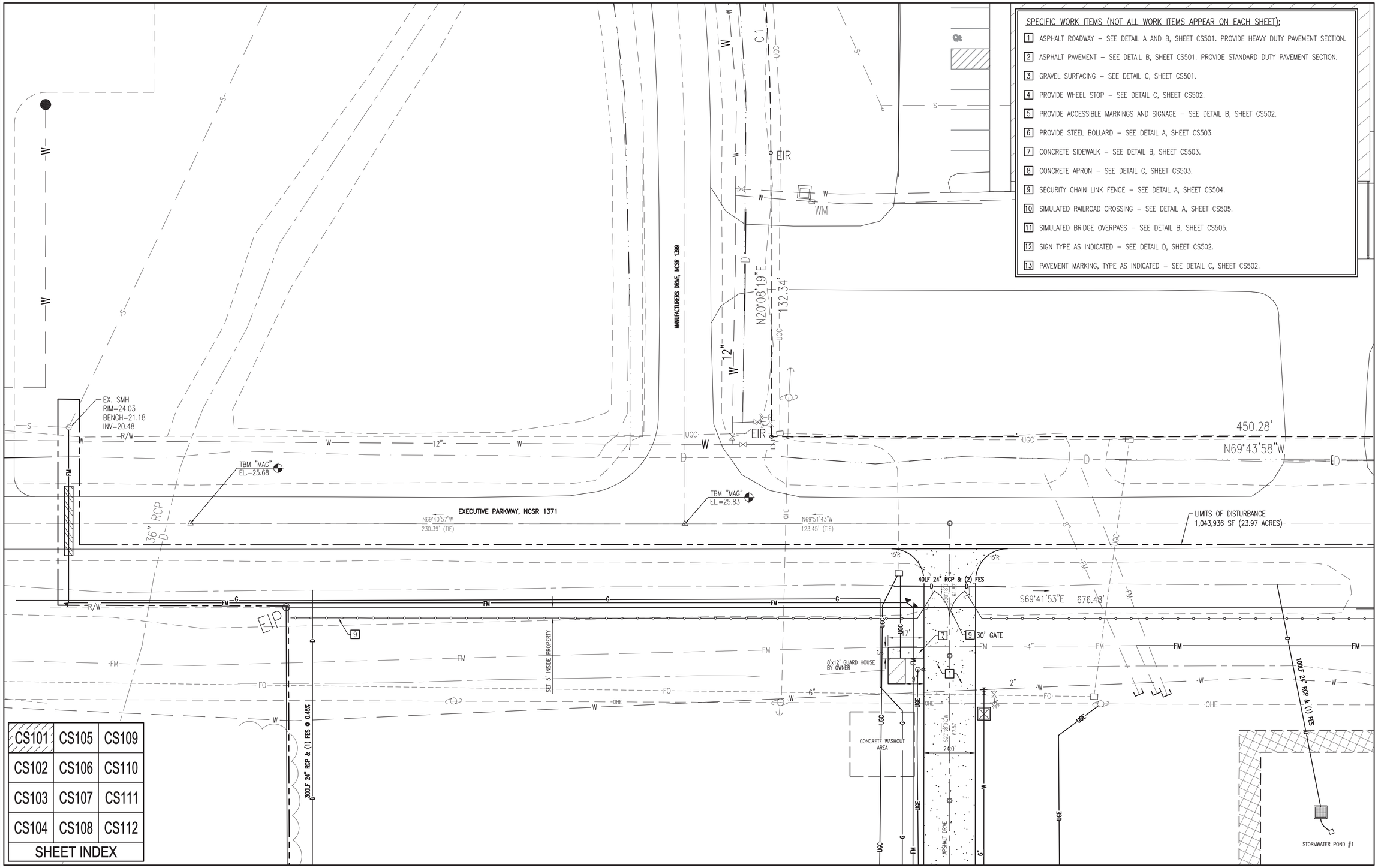

CS101	CS105	CS109
CS102	CS106	CS110
CS103	CS107	CS111
CS104	CS108	CS112
SHEET INDEX		

A ENLARGED SITE LAYOUT PLAN
SCALE: 1" = 20'

NOTE:
SEE SHEET GI001 FOR BID ALTERNATE INFORMATION. ALL CIVIL WORK DEPICTED THIS SHEET IS BASE BID WORK UNLESS SPECIFICALLY DESIGNATED AS BID ALTERNATE WORK.

20 0 10 20 40
GRAPHIC SCALE: 1" = 20'

LICENSE NO. C-0706
A/E PROJECT #23020
AVOLIS ENGINEERING, P.A.
P.O. BOX 15564
NEW BERN, NC 28561
PH. (252) 633-0068
kevin@avoliseng.com

WALKER the GROUP ARCHITECTURE incorporated
PO BOX 541, NEW BERN, NC 28563
2526366778

Digitally signed by John K. Avolis
NORTH CAROLINA PROFESSIONAL SEAL 15738 ENGINEER JOHN K. AVOLIS
JULY 28, 2025

PUBLIC SAFETY TRAINING CENTER

525 Executive Pkwy
New Bern, NC 28562

BID DOCUMENTS
SCO # 24-27879-01A

No.	Date	Revisions

Project Number
Date **7-28-2025**
Drawn **MSP**
Checked **JKA**
Scale **AS NOTED**
Drawing Title

ENLARGED SITE LAYOUT PLAN

Sheet Number **26** of **158**
Drawing Number
CS101

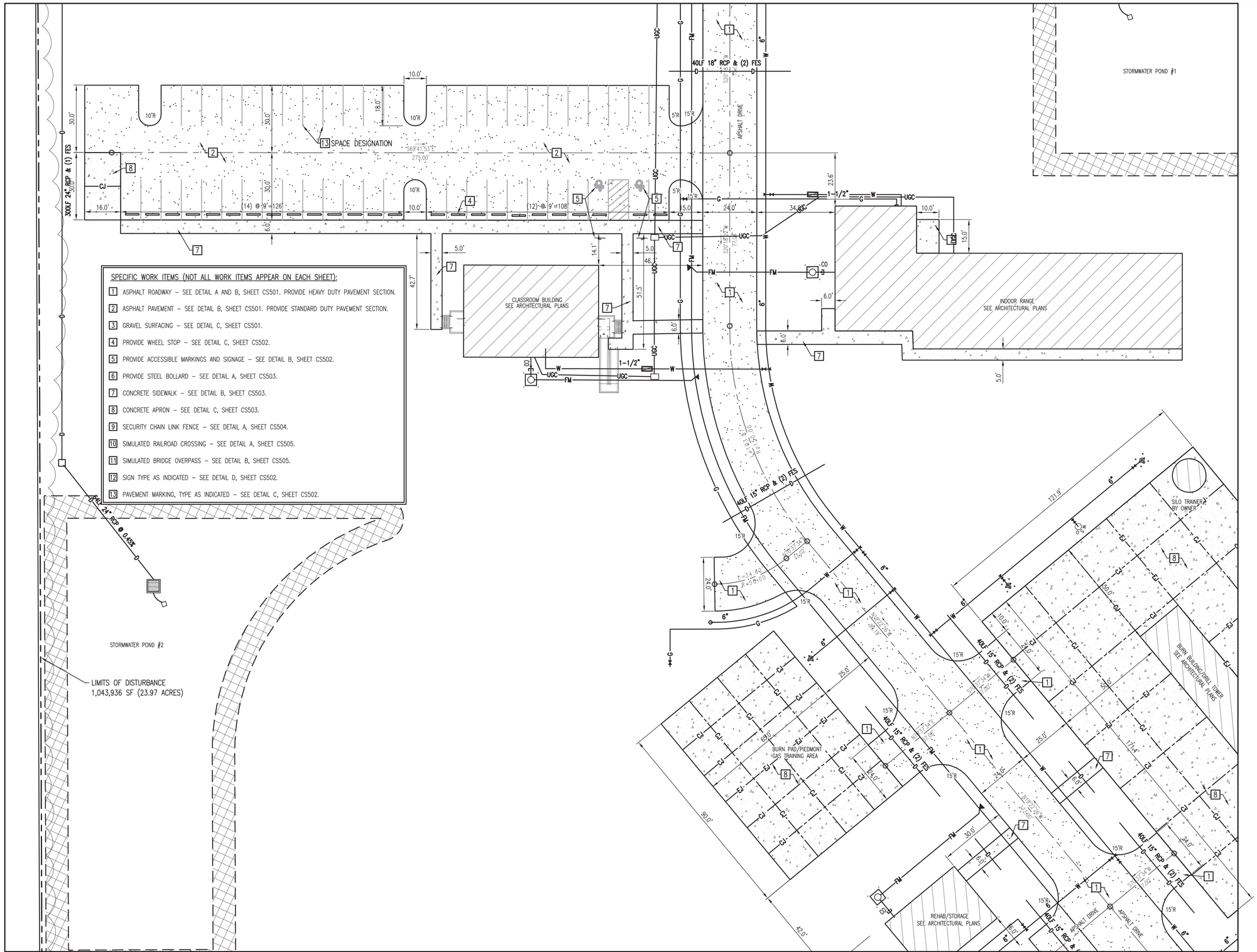

CS101	CS105	CS109
CS102	CS106	CS110
CS103	CS107	CS111
CS104	CS108	CS112

SHEET INDEX

A ENLARGED SITE LAYOUT PLAN

SCALE: 1" = 20'

TN PN

NOTE:
SEE SHEET GI001 FOR BID ALTERNATE INFORMATION. ALL CIVIL WORK DEPICTED THIS SHEET IS BASE BID WORK UNLESS SPECIFICALLY DESIGNATED AS BID ALTERNATE WORK.

20 0 10 20 40
GRAPHIC SCALE: 1" = 20'

LICENSE NO. C-0706
A/E PROJECT #23020
AVOLIS ENGINEERING, P.A.
P.O. BOX 15564
NEW BERN, NC 28561
PH. (252) 633-0068
kevin@avoliseng.com

WALKER the GROUP ARCHITECTURE incorporated
PO BOX 541, NEW BERN, NC 28563
2526366778

Digitally signed by John K. Avolis
NORTH CAROLINA PROFESSIONAL SEAL 15738 ENGINEER JOHN K. AVOLIS
JULY 28, 2025

PUBLIC SAFETY TRAINING CENTER

525 Executive Pkwy
New Bern, NC 28562

BID DOCUMENTS

SCO # 24-27879-01A

No.	Date	Revisions

Project Number

Date **7-28-2025**

Drawn **MSP**

Checked **JKA**

Scale **AS NOTED**

Drawing Title

ENLARGED SITE LAYOUT PLAN

Sheet Number **27** of **158**

Drawing Number

CS102

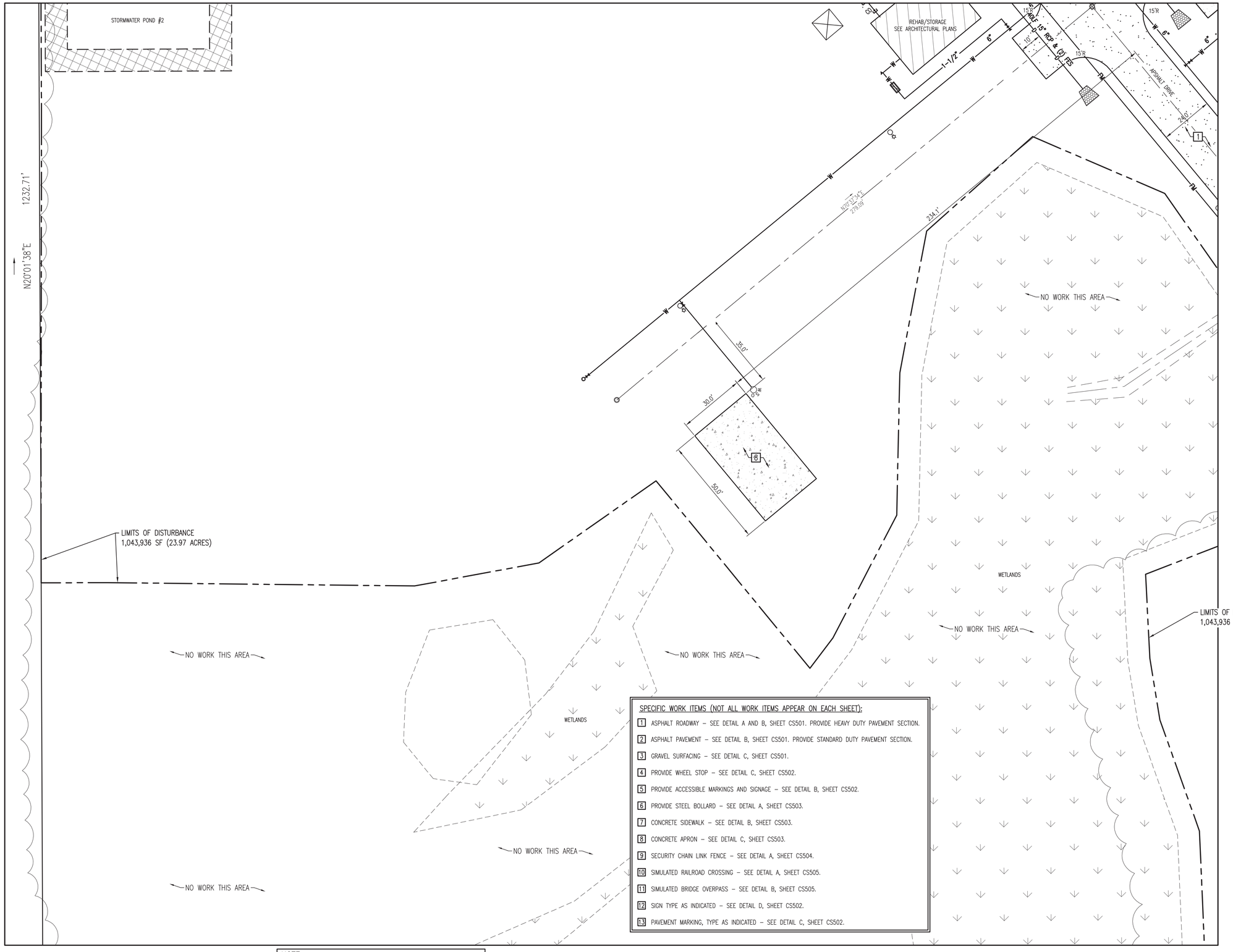

CS101	CS105	CS109
CS102	CS106	CS110
CS103	CS107	CS111
CS104	CS108	CS112

SHEET INDEX

SPECIFIC WORK ITEMS (NOT ALL WORK ITEMS APPEAR ON EACH SHEET):

1. ASPHALT ROADWAY – SEE DETAIL A AND B, SHEET CS501. PROVIDE HEAVY DUTY PAVEMENT SECTION.
2. ASPHALT PAVEMENT – SEE DETAIL B, SHEET CS501. PROVIDE STANDARD DUTY PAVEMENT SECTION.
3. GRAVEL SURFACING – SEE DETAIL C, SHEET CS501.
4. PROVIDE WHEEL STOP – SEE DETAIL C, SHEET CS502.
5. PROVIDE ACCESSIBLE MARKINGS AND SIGNAGE – SEE DETAIL B, SHEET CS502.
6. PROVIDE STEEL BOLLARD – SEE DETAIL A, SHEET CS503.
7. CONCRETE SIDEWALK – SEE DETAIL B, SHEET CS503.
8. CONCRETE APRON – SEE DETAIL C, SHEET CS503.
9. SECURITY CHAIN LINK FENCE – SEE DETAIL A, SHEET CS504.
10. SIMULATED RAILROAD CROSSING – SEE DETAIL A, SHEET CS505.
11. SIMULATED BRIDGE OVERPASS – SEE DETAIL B, SHEET CS505.
12. SIGN TYPE AS INDICATED – SEE DETAIL D, SHEET CS502.
13. PAVEMENT MARKING, TYPE AS INDICATED – SEE DETAIL C, SHEET CS502.

A ENLARGED SITE LAYOUT PLAN

SCALE: 1" = 20'

TN PN

NOTE:
SEE SHEET GI001 FOR BID ALTERNATE INFORMATION. ALL CIVIL WORK DEPICTED THIS SHEET IS BASE BID WORK UNLESS SPECIFICALLY DESIGNATED AS BID ALTERNATE WORK.

20 0 10 20 40
GRAPHIC SCALE: 1" = 20'

LICENSE NO. C-0706
A/E PROJECT #23020
AVOLIS ENGINEERING, P.A.
P.O. BOX 15564
NEW BERN, NC 28561
PH. (252) 633-0068
kevin@avoliseng.com

WALKER the GROUP ARCHITECTURE incorporated
PO BOX 541, NEW BERN, NC 28563
2526366778

Digitally signed by John K. Avolis
NORTH CAROLINA PROFESSIONAL SEAL 15738 ENGINEER JOHN K. AVOLIS
JULY 28, 2025

PUBLIC SAFETY TRAINING CENTER

525 Executive Pkwy
New Bern, NC 28562

BID DOCUMENTS

SCO # 24-27879-01A

No.	Date	Revisions

Project Number

Date **7-28-2025**

Drawn **MSP**

Checked **JKA**

Scale **AS NOTED**

Drawing Title

ENLARGED SITE LAYOUT PLAN

Sheet Number **28** of **158**

Drawing Number

CS103

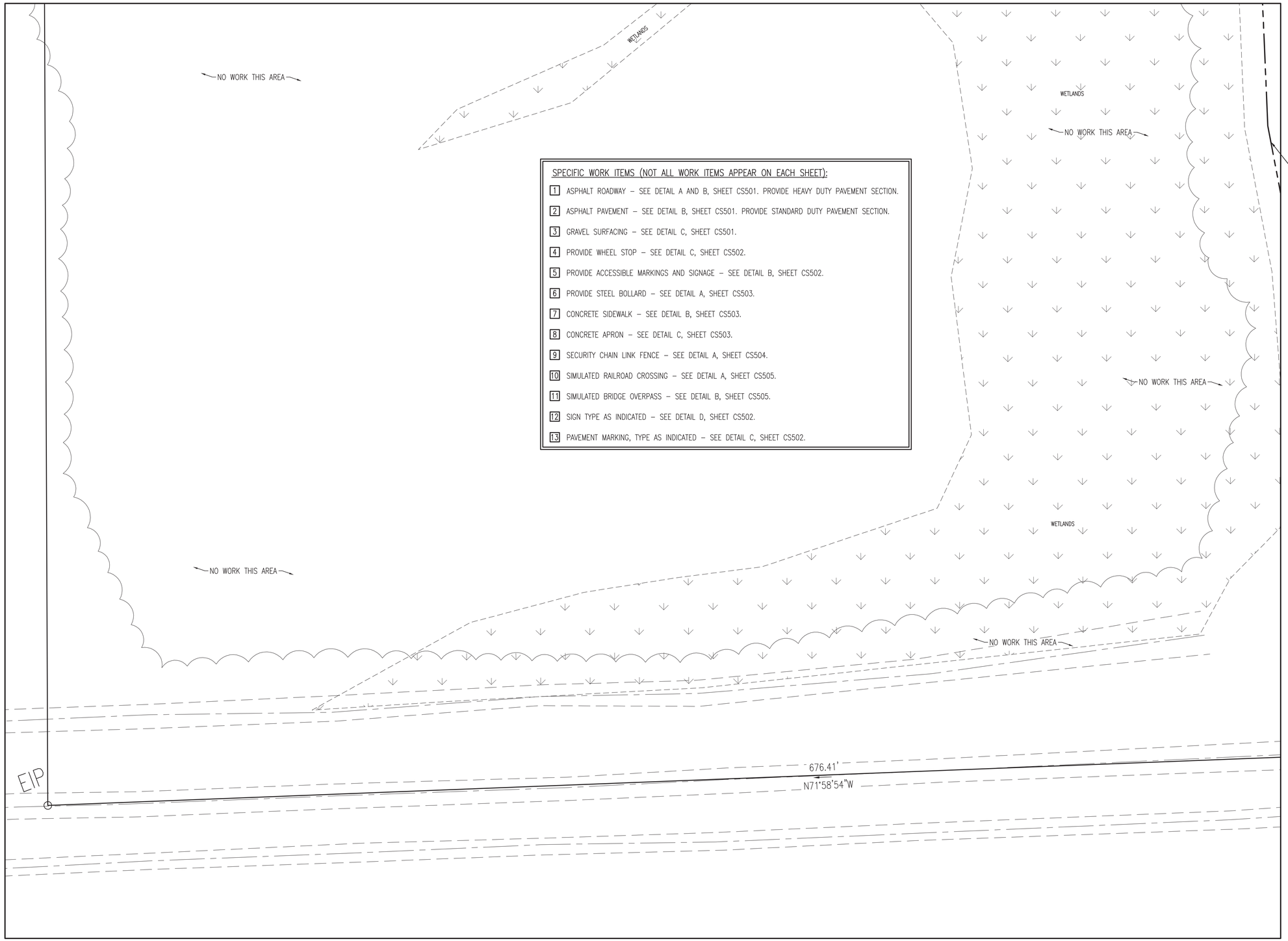

SPECIFIC WORK ITEMS (NOT ALL WORK ITEMS APPEAR ON EACH SHEET):

1. ASPHALT ROADWAY – SEE DETAIL A AND B, SHEET CS501. PROVIDE HEAVY DUTY PAVEMENT SECTION.
2. ASPHALT PAVEMENT – SEE DETAIL B, SHEET CS501. PROVIDE STANDARD DUTY PAVEMENT SECTION.
3. GRAVEL SURFACING – SEE DETAIL C, SHEET CS501.
4. PROVIDE WHEEL STOP – SEE DETAIL C, SHEET CS502.
5. PROVIDE ACCESSIBLE MARKINGS AND SIGNAGE – SEE DETAIL B, SHEET CS502.
6. PROVIDE STEEL BOLLARD – SEE DETAIL A, SHEET CS503.
7. CONCRETE SIDEWALK – SEE DETAIL B, SHEET CS503.
8. CONCRETE APRON – SEE DETAIL C, SHEET CS503.
9. SECURITY CHAIN LINK FENCE – SEE DETAIL A, SHEET CS504.
10. SIMULATED RAILROAD CROSSING – SEE DETAIL A, SHEET CS505.
11. SIMULATED BRIDGE OVERPASS – SEE DETAIL B, SHEET CS505.
12. SIGN TYPE AS INDICATED – SEE DETAIL D, SHEET CS502.
13. PAVEMENT MARKING, TYPE AS INDICATED – SEE DETAIL C, SHEET CS502.

LIMITS OF DISTURBANCE
1,043,936 SF (23.97 ACRES)

CS101	CS105	CS109
CS102	CS106	CS110
CS103	CS107	CS111
CS104	CS108	CS112

SHEET INDEX

A ENLARGED SITE LAYOUT PLAN

SCALE: 1" = 20'

TN PN

NOTE:
SEE SHEET GI001 FOR BID ALTERNATE INFORMATION. ALL CIVIL WORK DEPICTED THIS SHEET IS BASE BID WORK UNLESS SPECIFICALLY DESIGNATED AS BID ALTERNATE WORK.

20 0 10 20 40
GRAPHIC SCALE: 1" = 20'

LICENSE NO. C-0706
A/E PROJECT #23020
AVOLIS ENGINEERING, P.A.
P.O. BOX 15564
NEW BERN, NC 28561
PH. (252) 633-0068
kevin@avoliseng.com

WALKER the GROUP ARCHITECTURE incorporated
PO BOX 541, NEW BERN, NC 28563
2526366778

Digitally signed by John K. Avolis
NORTH CAROLINA PROFESSIONAL SEAL 15738 ENGINEER JOHN K. AVOLIS
JULY 28, 2025

PUBLIC SAFETY TRAINING CENTER

525 Executive Pkwy
New Bern, NC 28562

BID DOCUMENTS
SCO # 24-27879-01A

Revisions
No. Date

Project Number
Date **7-28-2025**
Drawn **MSP**
Checked **JKA**
Scale **AS NOTED**
Drawing Title

ENLARGED SITE LAYOUT PLAN

Sheet Number **29** of **158**
Drawing Number
CS104

CS101	CS105	CS109
CS102	CS106	CS110
CS103	CS107	CS111
CS104	CS108	CS112

SHEET INDEX

SPECIFIC WORK ITEMS (NOT ALL WORK ITEMS APPEAR ON EACH SHEET):

1. ASPHALT ROADWAY – SEE DETAIL A AND B, SHEET CS501. PROVIDE HEAVY DUTY PAVEMENT SECTION.
2. ASPHALT PAVEMENT – SEE DETAIL B, SHEET CS501. PROVIDE STANDARD DUTY PAVEMENT SECTION.
3. GRAVEL SURFACING – SEE DETAIL C, SHEET CS501.
4. PROVIDE WHEEL STOP – SEE DETAIL C, SHEET CS502.
5. PROVIDE ACCESSIBLE MARKINGS AND SIGNAGE – SEE DETAIL B, SHEET CS502.
6. PROVIDE STEEL BOLLARD – SEE DETAIL A, SHEET CS503.
7. CONCRETE SIDEWALK – SEE DETAIL B, SHEET CS503.
8. CONCRETE APRON – SEE DETAIL C, SHEET CS503.
9. SECURITY CHAIN LINK FENCE – SEE DETAIL A, SHEET CS504.
10. SIMULATED RAILROAD CROSSING – SEE DETAIL A, SHEET CS505.
11. SIMULATED BRIDGE OVERPASS – SEE DETAIL B, SHEET CS505.
12. SIGN TYPE AS INDICATED – SEE DETAIL D, SHEET CS502.
13. PAVEMENT MARKING, TYPE AS INDICATED – SEE DETAIL C, SHEET CS502.

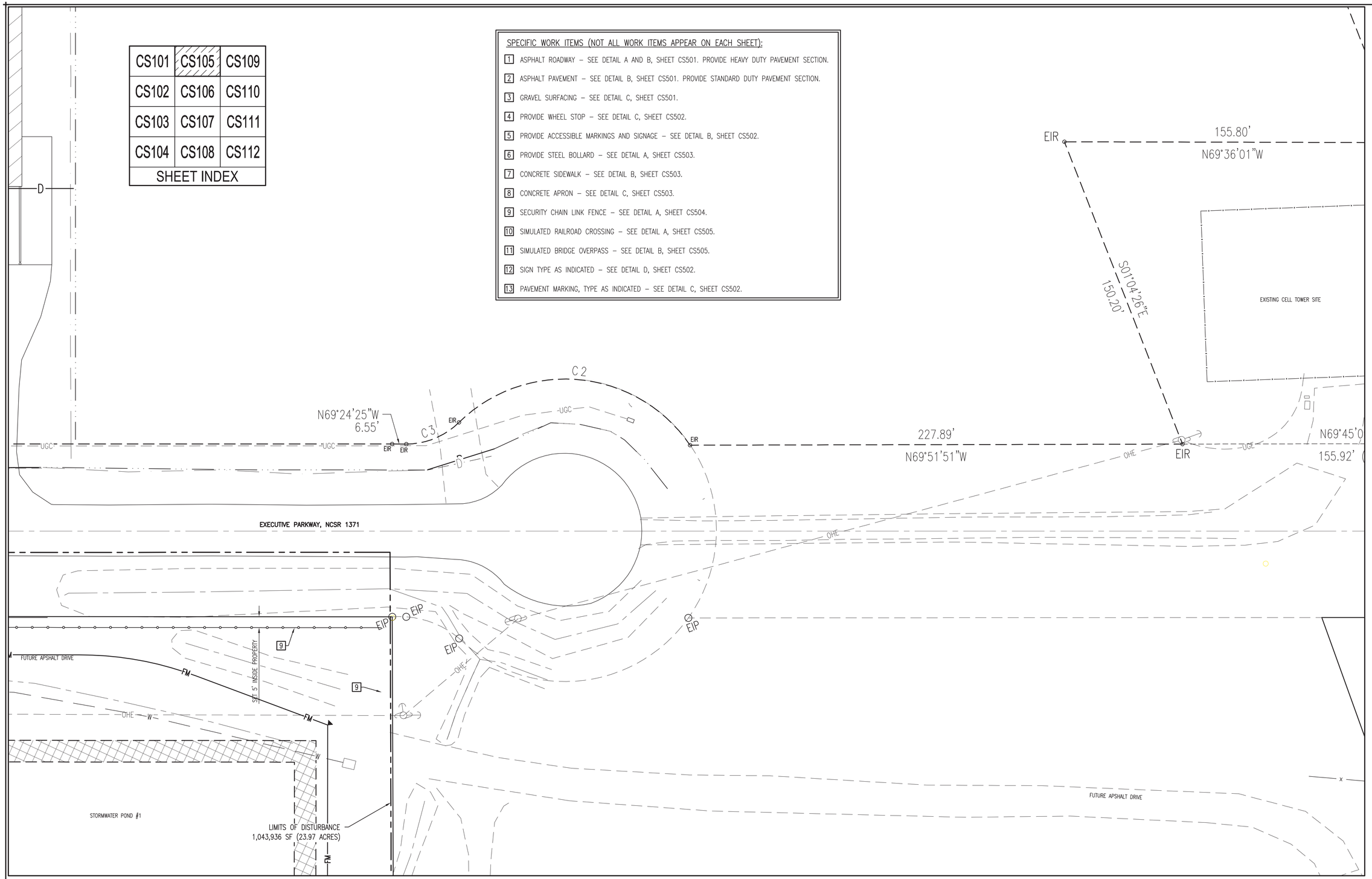

A ENLARGED SITE LAYOUT PLAN
SCALE: 1" = 20'

TN PN

NOTE:
SEE SHEET GI001 FOR BID ALTERNATE INFORMATION. ALL CIVIL WORK DEPICTED THIS SHEET IS BASE BID WORK UNLESS SPECIFICALLY DESIGNATED AS BID ALTERNATE WORK.

20 0 10 20 40
GRAPHIC SCALE: 1" = 20'

AVOLIS ENGINEERING, P.A.
P.O. BOX 15564
NEW BERN, NC 28561
PH. (252) 633-0068
kevin@avoliseng.com
LICENSE NO. C-0706
A/E PROJECT #23020

WALKER the GROUP ARCHITECTURE incorporated
PO BOX 541, NEW BERN, NC 28563
2526366778

Digitally signed by John K. Avolis
NORTH CAROLINA PROFESSIONAL SEAL 15738 ENGINEER JOHN K. AVOLIS
JULY 28, 2025

PUBLIC SAFETY TRAINING CENTER

525 Executive Pkwy
New Bern, NC 28562

BID DOCUMENTS
SCO # 24-27879-01A

No.	Date	Revisions

Project Number
Date **7-28-2025**
Drawn **MSP**
Checked **JKA**
Scale **AS NOTED**
Drawing Title

ENLARGED SITE LAYOUT PLAN

Sheet Number **30** of **158**
Drawing Number
CS105

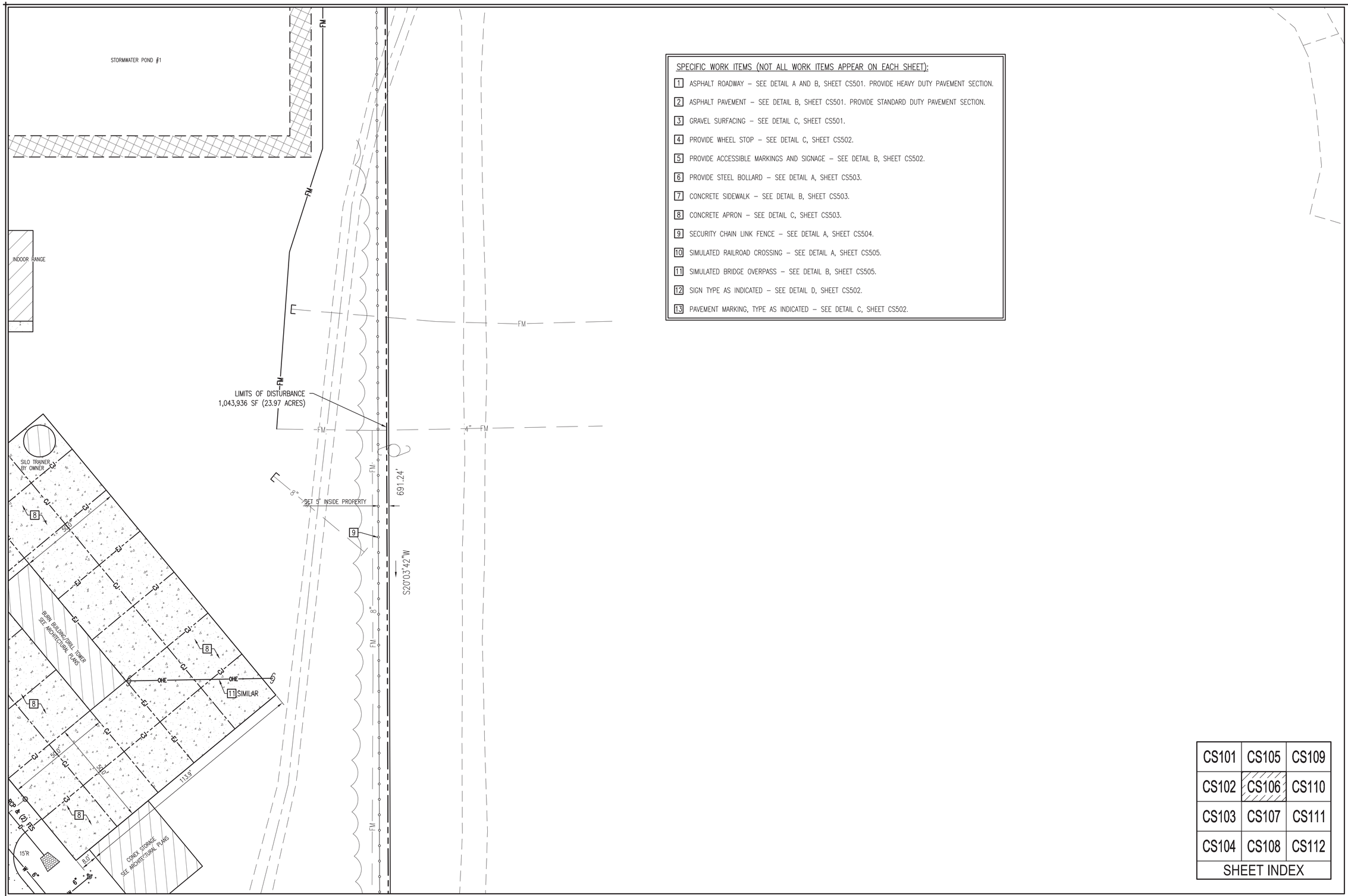

SPECIFIC WORK ITEMS (NOT ALL WORK ITEMS APPEAR ON EACH SHEET):

1. ASPHALT ROADWAY – SEE DETAIL A AND B, SHEET CS501. PROVIDE HEAVY DUTY PAVEMENT SECTION.
2. ASPHALT PAVEMENT – SEE DETAIL B, SHEET CS501. PROVIDE STANDARD DUTY PAVEMENT SECTION.
3. GRAVEL SURFACING – SEE DETAIL C, SHEET CS501.
4. PROVIDE WHEEL STOP – SEE DETAIL C, SHEET CS502.
5. PROVIDE ACCESSIBLE MARKINGS AND SIGNAGE – SEE DETAIL B, SHEET CS502.
6. PROVIDE STEEL BOLLARD – SEE DETAIL A, SHEET CS503.
7. CONCRETE SIDEWALK – SEE DETAIL B, SHEET CS503.
8. CONCRETE APRON – SEE DETAIL C, SHEET CS503.
9. SECURITY CHAIN LINK FENCE – SEE DETAIL A, SHEET CS504.
10. SIMULATED RAILROAD CROSSING – SEE DETAIL A, SHEET CS505.
11. SIMULATED BRIDGE OVERPASS – SEE DETAIL B, SHEET CS505.
12. SIGN TYPE AS INDICATED – SEE DETAIL D, SHEET CS502.
13. PAVEMENT MARKING, TYPE AS INDICATED – SEE DETAIL C, SHEET CS502.

CS101	CS105	CS109
CS102	CS106	CS110
CS103	CS107	CS111
CS104	CS108	CS112

SHEET INDEX

A ENLARGED SITE LAYOUT PLAN

SCALE: 1" = 20'

TN PN

NOTE:
SEE SHEET GI001 FOR BID ALTERNATE INFORMATION. ALL CIVIL WORK DEPICTED THIS SHEET IS BASE BID WORK UNLESS SPECIFICALLY DESIGNATED AS BID ALTERNATE WORK.

20 0 10 20 40
GRAPHIC SCALE: 1" = 20'

LICENSE NO. C-0706
A/E PROJECT #23020
AVOLIS ENGINEERING, P.A.
P.O. BOX 15564
NEW BERN, NC 28561
PH. (252) 633-0068
kevin@avoliseng.com

WALKER the GROUP ARCHITECTURE incorporated
PO BOX 541, NEW BERN, NC 28563
2526366778

Digitally signed by John K. Avolis
NORTH CAROLINA PROFESSIONAL SEAL 15738 ENGINEER JOHN K. AVOLIS
JULY 28, 2025

PUBLIC SAFETY TRAINING CENTER

525 Executive Pkwy
New Bern, NC 28562

BID DOCUMENTS
SCO # 24-27879-01A

Revisions
No. Date

Project Number
Date **7-28-2025**
Drawn **MSP**
Checked **JKA**
Scale **AS NOTED**
Drawing Title

ENLARGED SITE LAYOUT PLAN

Sheet Number **31** of **158**
Drawing Number
CS106

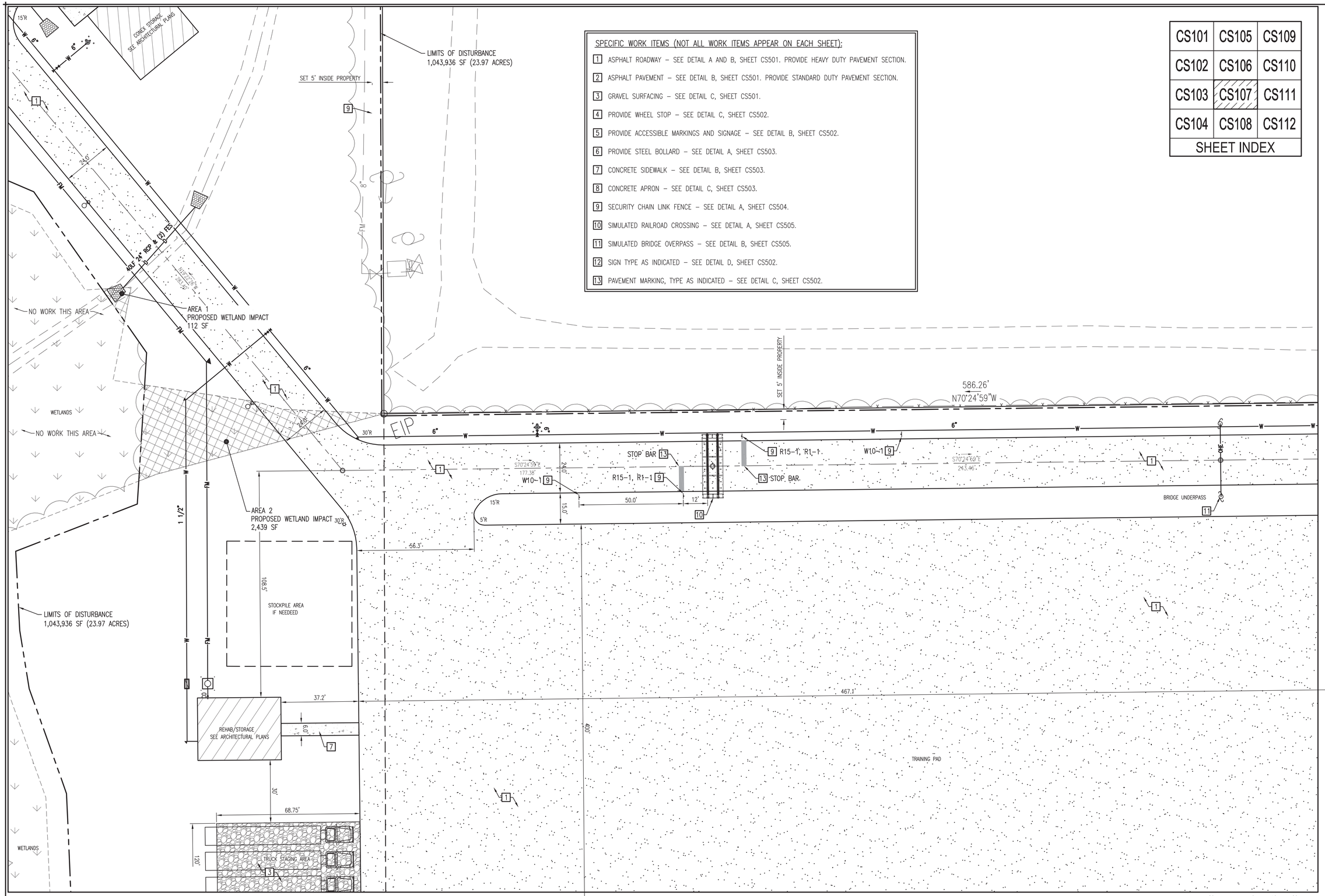

SPECIFIC WORK ITEMS (NOT ALL WORK ITEMS APPEAR ON EACH SHEET):

1. ASPHALT ROADWAY – SEE DETAIL A AND B, SHEET CS501. PROVIDE HEAVY DUTY PAVEMENT SECTION.
2. ASPHALT PAVEMENT – SEE DETAIL B, SHEET CS501. PROVIDE STANDARD DUTY PAVEMENT SECTION.
3. GRAVEL SURFACING – SEE DETAIL C, SHEET CS501.
4. PROVIDE WHEEL STOP – SEE DETAIL C, SHEET CS502.
5. PROVIDE ACCESSIBLE MARKINGS AND SIGNAGE – SEE DETAIL B, SHEET CS502.
6. PROVIDE STEEL BOLLARD – SEE DETAIL A, SHEET CS503.
7. CONCRETE SIDEWALK – SEE DETAIL B, SHEET CS503.
8. CONCRETE APRON – SEE DETAIL C, SHEET CS503.
9. SECURITY CHAIN LINK FENCE – SEE DETAIL A, SHEET CS504.
10. SIMULATED RAILROAD CROSSING – SEE DETAIL A, SHEET CS505.
11. SIMULATED BRIDGE OVERPASS – SEE DETAIL B, SHEET CS505.
12. SIGN TYPE AS INDICATED – SEE DETAIL D, SHEET CS502.
13. PAVEMENT MARKING, TYPE AS INDICATED – SEE DETAIL C, SHEET CS502.

CS101	CS105	CS109
CS102	CS106	CS110
CS103	CS107	CS111
CS104	CS108	CS112

SHEET INDEX

A ENLARGED SITE LAYOUT PLAN

SCALE: 1" = 20'

TN PN

NOTE:
SEE SHEET GI001 FOR BID ALTERNATE INFORMATION. ALL CIVIL WORK DEPICTED THIS SHEET IS BASE BID WORK UNLESS SPECIFICALLY DESIGNATED AS BID ALTERNATE WORK.

LICENSE NO. C-0706
A/E PROJECT #23020
AVOLIS ENGINEERING, P.A.
P.O. BOX 15564
NEW BERN, NC 28561
PH. (252) 633-0068
kevin@avoliseng.com

WALKER the GROUP ARCHITECTURE incorporated
PO BOX 541, NEW BERN, NC 28563
2526366778

Digitally signed by John K. Avolis
NORTH CAROLINA PROFESSIONAL SEAL 15738 ENGINEER JOHN K. AVOLIS
JULY 28, 2025

PUBLIC SAFETY TRAINING CENTER

525 Executive Pkwy
New Bern, NC 28562

BID DOCUMENTS

SCO # 24-27879-01A

Revisions

No.	Date

Project Number

Date **7-28-2025**

Drawn **MSP**

Checked **JKA**

Scale **AS NOTED**

Drawing Title

ENLARGED SITE LAYOUT PLAN

Sheet Number **32** of **158**

Drawing Number

CS107

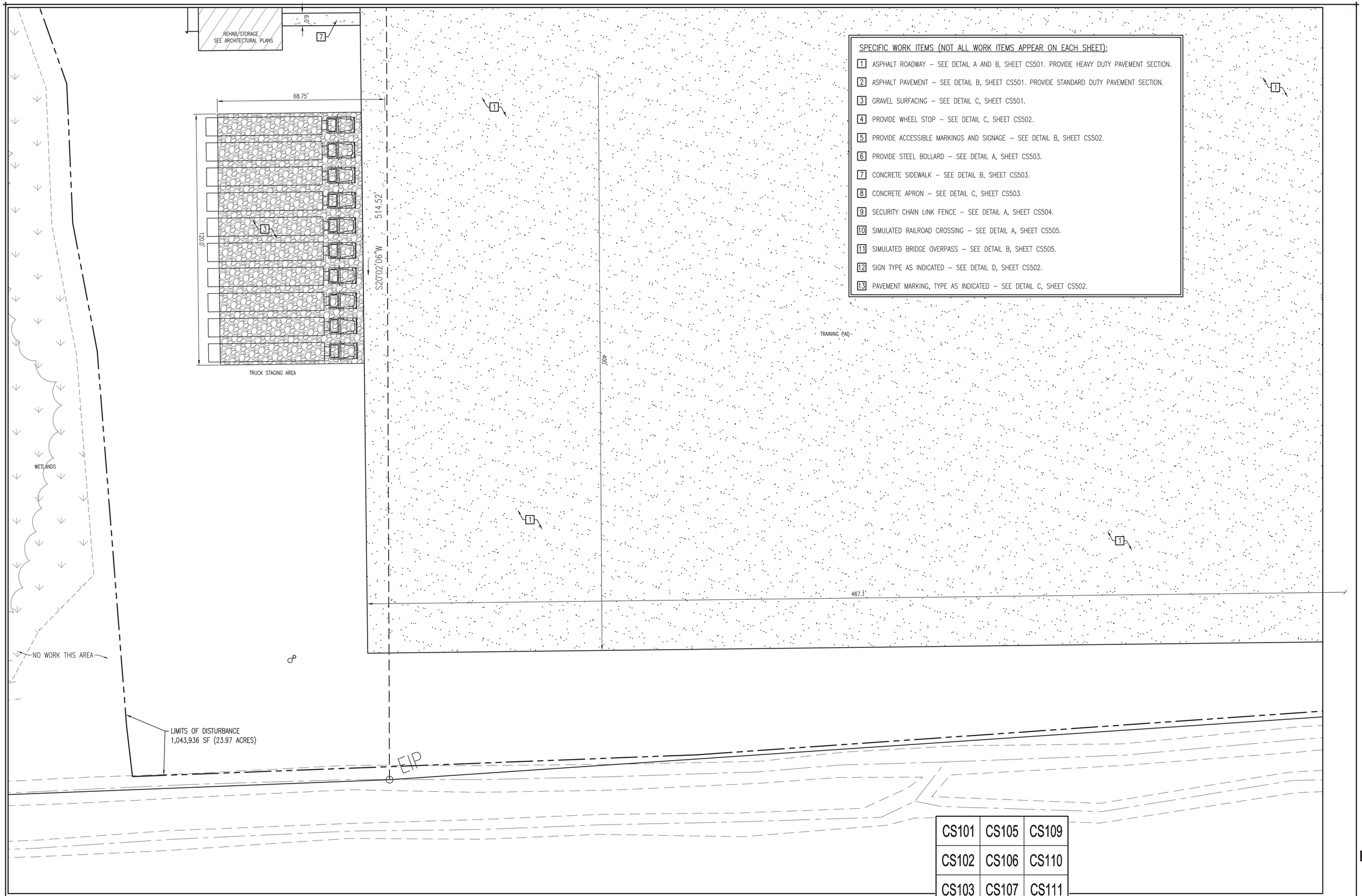

SPECIFIC WORK ITEMS (NOT ALL WORK ITEMS APPEAR ON EACH SHEET):

1. ASPHALT ROADWAY – SEE DETAIL A AND B, SHEET CS501. PROVIDE HEAVY DUTY PAVEMENT SECTION.
2. ASPHALT PAVEMENT – SEE DETAIL B, SHEET CS501. PROVIDE STANDARD DUTY PAVEMENT SECTION.
3. GRAVEL SURFACING – SEE DETAIL C, SHEET CS501.
4. PROVIDE WHEEL STOP – SEE DETAIL C, SHEET CS502.
5. PROVIDE ACCESSIBLE MARKINGS AND SIGNAGE – SEE DETAIL B, SHEET CS502.
6. PROVIDE STEEL BOLLARD – SEE DETAIL A, SHEET CS503.
7. CONCRETE SIDEWALK – SEE DETAIL B, SHEET CS503.
8. CONCRETE APRON – SEE DETAIL C, SHEET CS503.
9. SECURITY CHAIN LINK FENCE – SEE DETAIL A, SHEET CS504.
10. SIMULATED RAILROAD CROSSING – SEE DETAIL A, SHEET CS505.
11. SIMULATED BRIDGE OVERPASS – SEE DETAIL B, SHEET CS505.
12. SIGN TYPE AS INDICATED – SEE DETAIL D, SHEET CS502.
13. PAVEMENT MARKING, TYPE AS INDICATED – SEE DETAIL C, SHEET CS502.

CS101	CS105	CS109
CS102	CS106	CS110
CS103	CS107	CS111
CS104	CS108	CS112

SHEET INDEX

A ENLARGED SITE LAYOUT PLAN

SCALE: 1" = 20'

TN PN

NOTE:
SEE SHEET GI001 FOR BID ALTERNATE INFORMATION. ALL CIVIL WORK DEPICTED THIS SHEET IS BASE BID WORK UNLESS SPECIFICALLY DESIGNATED AS BID ALTERNATE WORK.

20 0 10 20 40
GRAPHIC SCALE: 1" = 20'

LICENSE NO. C-0706
A/E PROJECT #23020
AVOLIS ENGINEERING, P.A.
P.O. BOX 15564
NEW BERN, NC 28561
PH. (252) 633-0068
kevin@avoliseng.com

WALKER the GROUP ARCHITECTURE incorporated
PO BOX 541, NEW BERN, NC 28563
2526366778

Digitally signed by John K. Avolis
NORTH CAROLINA PROFESSIONAL SEAL 15738 ENGINEER JOHN K. AVOLIS
JULY 28, 2025

PUBLIC SAFETY TRAINING CENTER

525 Executive Pkwy
New Bern, NC 28562

BID DOCUMENTS
SCO # 24-27879-01A

No.	Date	Revisions

Project Number

Date **7-28-2025**

Drawn **MSP**

Checked **JKA**

Scale **AS NOTED**

Drawing Title

ENLARGED SITE LAYOUT PLAN

Sheet Number **33** of **158**

Drawing Number

CS108

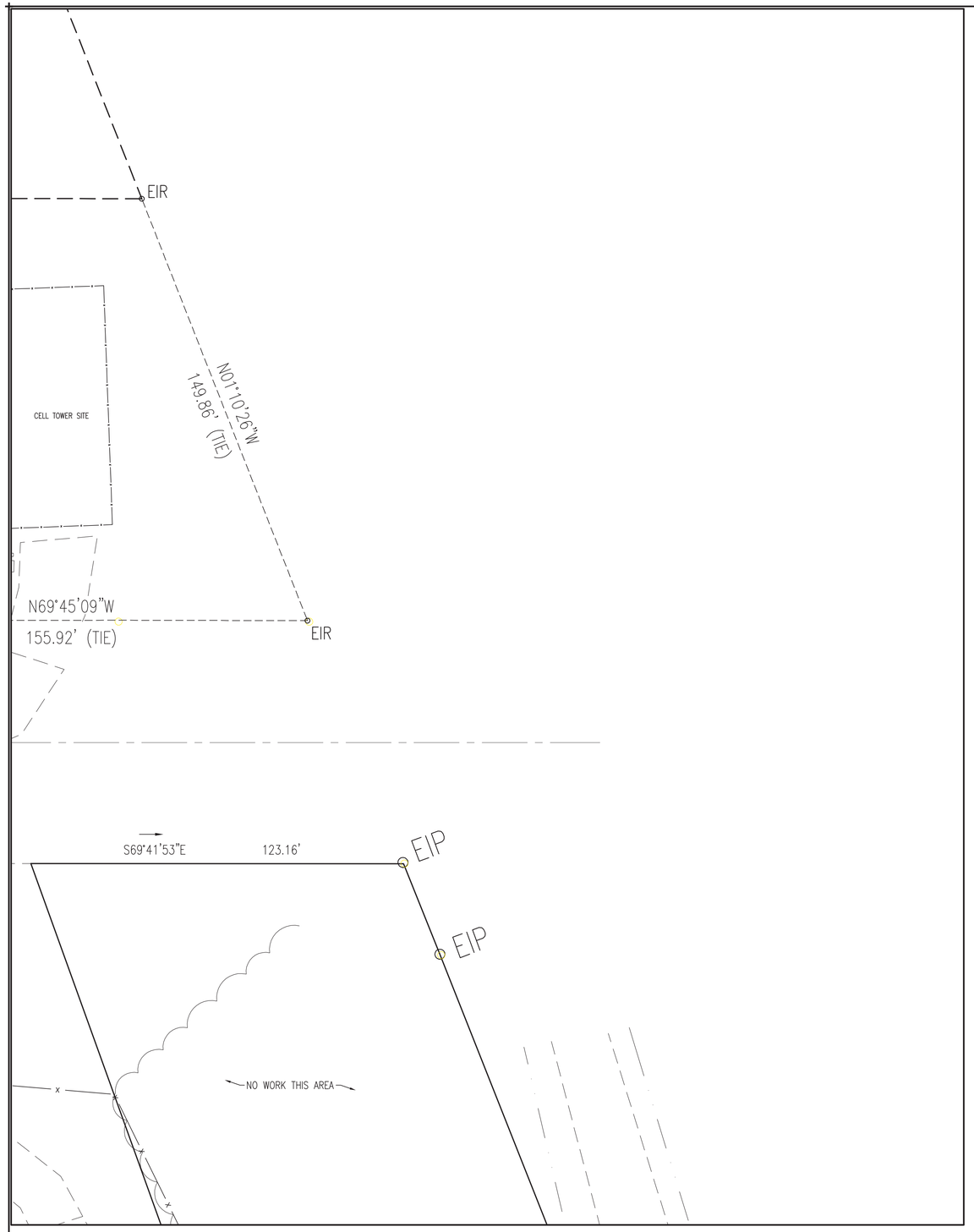

A ENLARGED SITE LAYOUT PLAN
SCALE: 1" = 20'

TN PN

SPECIFIC WORK ITEMS (NOT ALL WORK ITEMS APPEAR ON EACH SHEET):

1. ASPHALT ROADWAY – SEE DETAIL A AND B, SHEET CS501. PROVIDE HEAVY DUTY PAVEMENT SECTION.
2. ASPHALT PAVEMENT – SEE DETAIL B, SHEET CS501. PROVIDE STANDARD DUTY PAVEMENT SECTION.
3. GRAVEL SURFACING – SEE DETAIL C, SHEET CS501.
4. PROVIDE WHEEL STOP – SEE DETAIL C, SHEET CS502.
5. PROVIDE ACCESSIBLE MARKINGS AND SIGNAGE – SEE DETAIL B, SHEET CS502.
6. PROVIDE STEEL BOLLARD – SEE DETAIL A, SHEET CS503.
7. CONCRETE SIDEWALK – SEE DETAIL B, SHEET CS503.
8. CONCRETE APRON – SEE DETAIL C, SHEET CS503.
9. SECURITY CHAIN LINK FENCE – SEE DETAIL A, SHEET CS504.
10. SIMULATED RAILROAD CROSSING – SEE DETAIL A, SHEET CS505.
11. SIMULATED BRIDGE OVERPASS – SEE DETAIL B, SHEET CS505.
12. SIGN TYPE AS INDICATED – SEE DETAIL D, SHEET CS502.
13. PAVEMENT MARKING, TYPE AS INDICATED – SEE DETAIL C, SHEET CS502.

NOTE:
SEE SHEET GI001 FOR BID ALTERNATE INFORMATION. ALL CIVIL WORK DEPICTED THIS SHEET IS BASE BID WORK UNLESS SPECIFICALLY DESIGNATED AS BID ALTERNATE WORK.

CS101	CS105	CS109
CS102	CS106	CS110
CS103	CS107	CS111
CS104	CS108	CS112

SHEET INDEX

20 0 10 20 40
GRAPHIC SCALE: 1" = 20'

A·E ARCHITECTURE
LICENSE NO. C-0706
A/E PROJECT #23020
AVOLIS ENGINEERING, P.A.
P.O. BOX 15564
NEW BERN, NC 28561
PH. (252) 633-0068
kevin@avoliseng.com

WALKER the GROUP ARCHITECTURE incorporated
PO BOX 541, NEW BERN, NC 28563
2526366778

Digitally signed by John K. Avolis
NORTH CAROLINA PROFESSIONAL SEAL 15738 ENGINEER JOHN K. AVOLIS
JULY 28, 2025

PUBLIC SAFETY TRAINING CENTER

525 Executive Pkwy
New Bern, NC 28562

BID DOCUMENTS
SCO # 24-27879-01A

No.	Date	Revisions

Project Number

Date **7-28-2025**

Drawn **MSP**

Checked **JKA**

Scale **AS NOTED**

Drawing Title

ENLARGED SITE LAYOUT PLAN

Sheet Number **34** Of **158**

Drawing Number

CS109

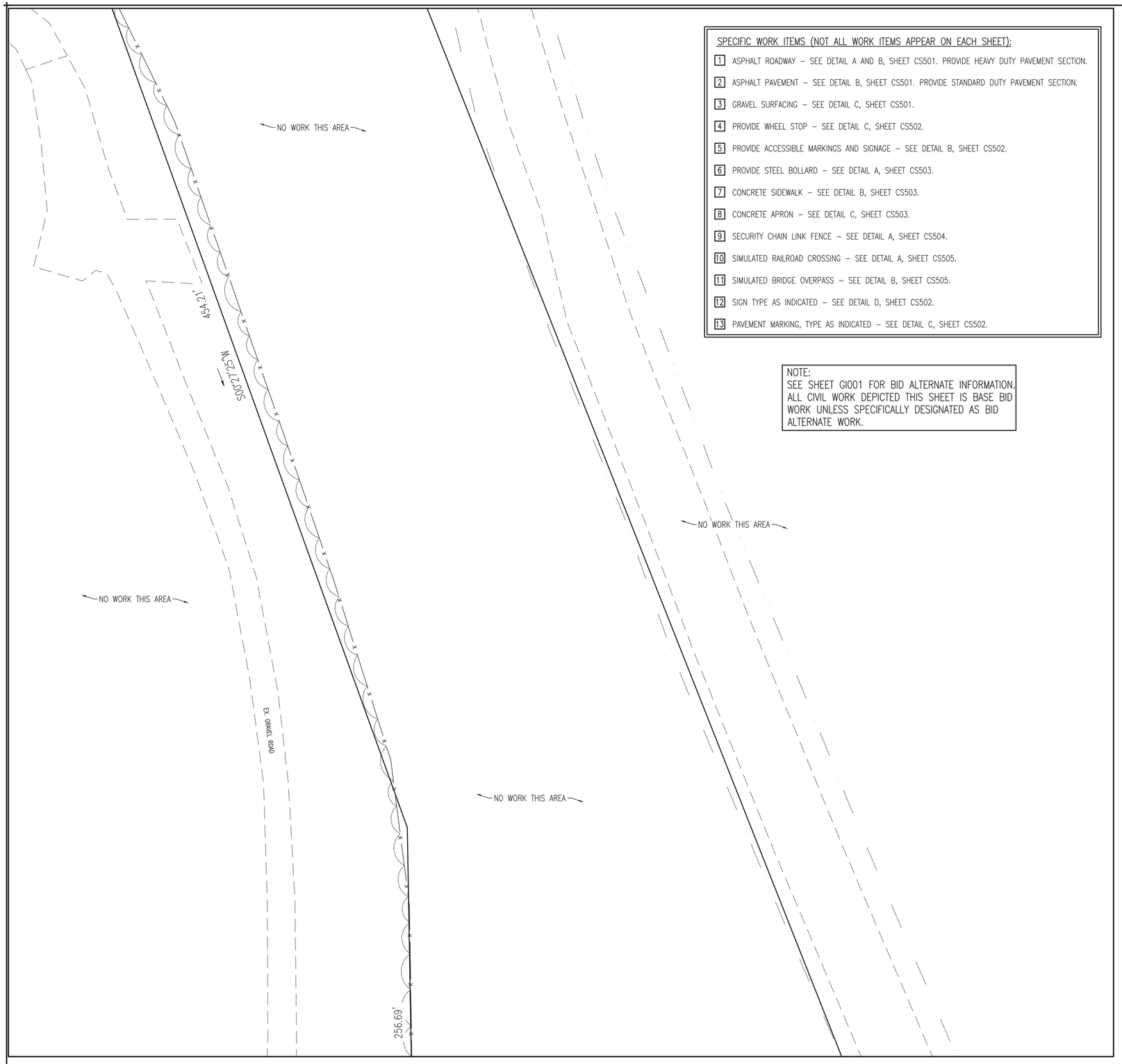

SPECIFIC WORK ITEMS (NOT ALL WORK ITEMS APPEAR ON EACH SHEET):

1. ASPHALT ROADWAY – SEE DETAIL A AND B, SHEET CS501. PROVIDE HEAVY DUTY PAVEMENT SECTION.
2. ASPHALT PAVEMENT – SEE DETAIL B, SHEET CS501. PROVIDE STANDARD DUTY PAVEMENT SECTION.
3. GRAVEL SURFACING – SEE DETAIL C, SHEET CS501.
4. PROVIDE WHEEL STOP – SEE DETAIL C, SHEET CS502.
5. PROVIDE ACCESSIBLE MARKINGS AND SIGNAGE – SEE DETAIL B, SHEET CS502.
6. PROVIDE STEEL BOLLARD – SEE DETAIL A, SHEET CS503.
7. CONCRETE SIDEWALK – SEE DETAIL B, SHEET CS503.
8. CONCRETE APRON – SEE DETAIL C, SHEET CS503.
9. SECURITY CHAIN LINK FENCE – SEE DETAIL A, SHEET CS504.
10. SIMULATED RAILROAD CROSSING – SEE DETAIL A, SHEET CS505.
11. SIMULATED BRIDGE OVERPASS – SEE DETAIL B, SHEET CS505.
12. SIGN TYPE AS INDICATED – SEE DETAIL D, SHEET CS502.
13. PAVEMENT MARKING, TYPE AS INDICATED – SEE DETAIL C, SHEET CS502.

NOTE:
SEE SHEET GI001 FOR BID ALTERNATE INFORMATION. ALL CIVIL WORK DEPICTED THIS SHEET IS BASE BID WORK UNLESS SPECIFICALLY DESIGNATED AS BID ALTERNATE WORK.

A ENLARGED SITE LAYOUT PLAN
SCALE: 1" = 20'

TN PN

CS101	CS105	CS109
CS102	CS106	CS110
CS103	CS107	CS111
CS104	CS108	CS112

SHEET INDEX

20 0 10 20 40
GRAPHIC SCALE: 1" = 20'

AVOLIS ENGINEERING, P.A.
P.O. BOX 15564
NEW BERN, NC 28561
PH. (252) 633-0068
kevin@avoliseng.com
LICENSE NO. C-0706
A/E PROJECT #23020

WALKER the GROUP ARCHITECTURE incorporated
PO BOX 541, NEW BERN, NC 28563
2526366778

Digitally signed by John K. Avolis
NORTH CAROLINA PROFESSIONAL SEAL 15738 ENGINEER JOHN K. AVOLIS
JULY 28, 2025

PUBLIC SAFETY TRAINING CENTER

525 Executive Pkwy
New Bern, NC 28562

BID DOCUMENTS
SCO # 24-27879-01A

No.	Date	Revisions

Project Number
Date **7-28-2025**
Drawn **MSP**
Checked **JKA**
Scale **AS NOTED**
Drawing Title
ENLARGED SITE LAYOUT PLAN

Sheet Number **35** Of **158**
Drawing Number
CS110

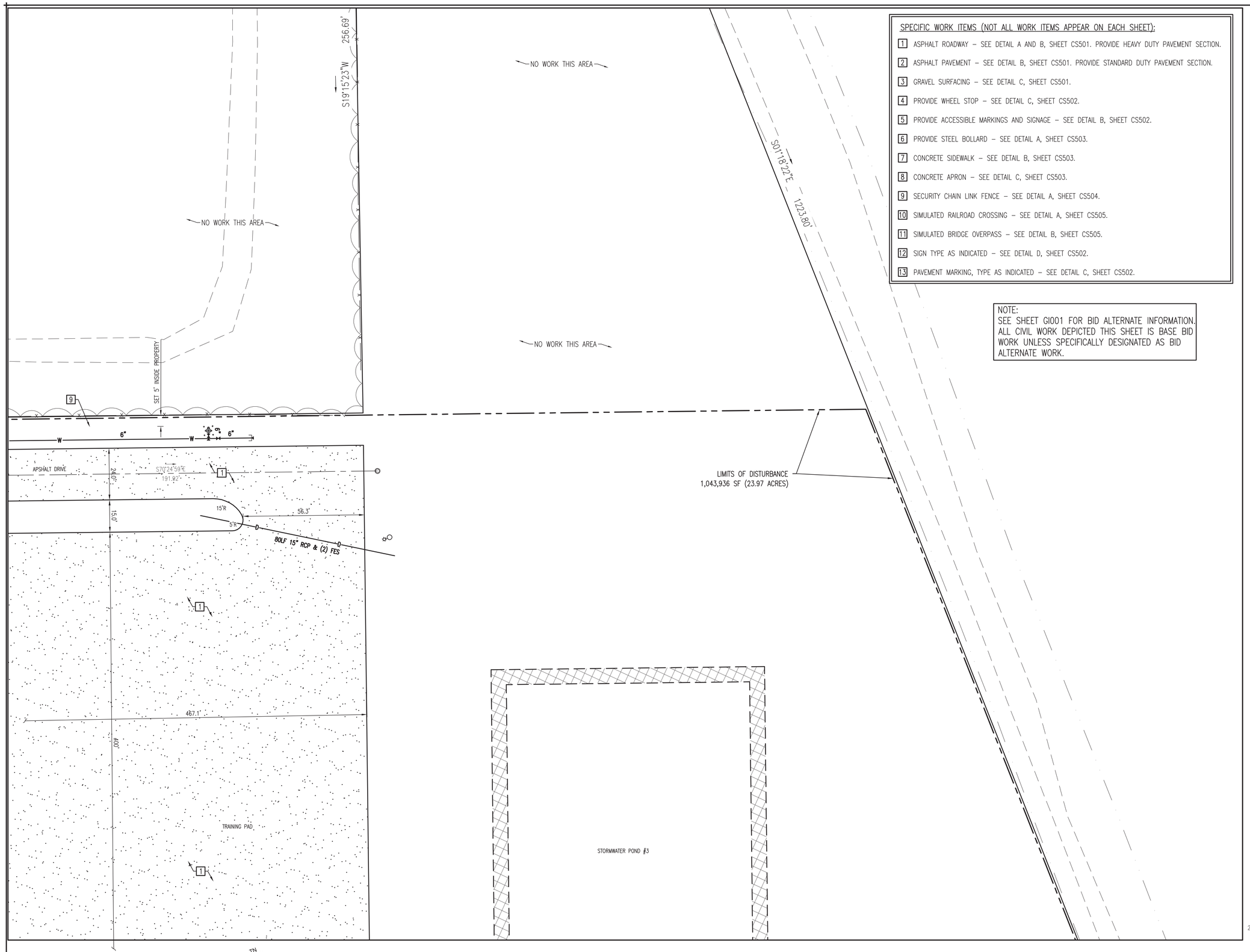

A ENLARGED SITE LAYOUT PLAN
SCALE: 1" = 20'

SPECIFIC WORK ITEMS (NOT ALL WORK ITEMS APPEAR ON EACH SHEET):

1. ASPHALT ROADWAY – SEE DETAIL A AND B, SHEET CS501. PROVIDE HEAVY DUTY PAVEMENT SECTION.
2. ASPHALT PAVEMENT – SEE DETAIL B, SHEET CS501. PROVIDE STANDARD DUTY PAVEMENT SECTION.
3. GRAVEL SURFACING – SEE DETAIL C, SHEET CS501.
4. PROVIDE WHEEL STOP – SEE DETAIL C, SHEET CS502.
5. PROVIDE ACCESSIBLE MARKINGS AND SIGNAGE – SEE DETAIL B, SHEET CS502.
6. PROVIDE STEEL BOLLARD – SEE DETAIL A, SHEET CS503.
7. CONCRETE SIDEWALK – SEE DETAIL B, SHEET CS503.
8. CONCRETE APRON – SEE DETAIL C, SHEET CS503.
9. SECURITY CHAIN LINK FENCE – SEE DETAIL A, SHEET CS504.
10. SIMULATED RAILROAD CROSSING – SEE DETAIL A, SHEET CS505.
11. SIMULATED BRIDGE OVERPASS – SEE DETAIL B, SHEET CS505.
12. SIGN TYPE AS INDICATED – SEE DETAIL D, SHEET CS502.
13. PAVEMENT MARKING, TYPE AS INDICATED – SEE DETAIL C, SHEET CS502.

NOTE:
SEE SHEET GI001 FOR BID ALTERNATE INFORMATION. ALL CIVIL WORK DEPICTED THIS SHEET IS BASE BID WORK UNLESS SPECIFICALLY DESIGNATED AS BID ALTERNATE WORK.

CS101	CS105	CS109
CS102	CS106	CS110
CS103	CS107	CS111
CS104	CS108	CS112

SHEET INDEX

20 0 10 20 40
GRAPHIC SCALE: 1" = 20'

AVOLIS ENGINEERING, P.A.
P.O. BOX 15564
NEW BERN, NC 28561
PH. (252) 633-0068
kevin@avoliseng.com
LICENSE NO. C-0706
A/E PROJECT #23020

WALKER the GROUP ARCHITECTURE incorporated
PO BOX 541, NEW BERN, NC 28563
2526366778

Digitally signed by John K. Avolis
NORTH CAROLINA PROFESSIONAL SEAL 15738 ENGINEER JOHN K. AVOLIS
JULY 28, 2025

PUBLIC SAFETY TRAINING CENTER

525 Executive Pkwy
New Bern, NC 28562

BID DOCUMENTS
SCO # 24-27879-01A

No.	Date	Revisions

Project Number
Date **7-28-2025**
Drawn **MSP**
Checked **JKA**
Scale **AS NOTED**
Drawing Title
ENLARGED SITE LAYOUT PLAN

Sheet Number **36** of **158**
Drawing Number
CS111

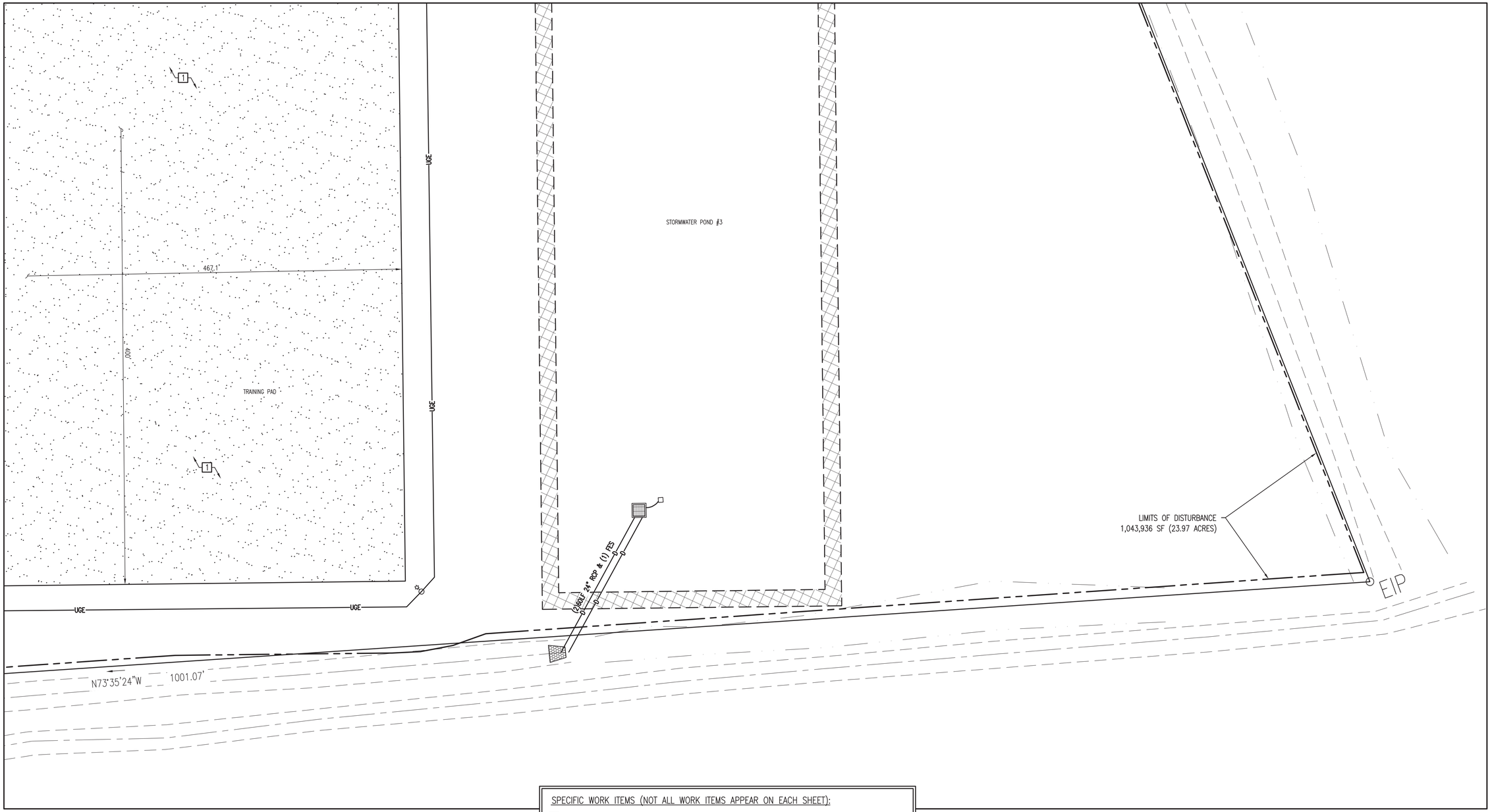

SPECIFIC WORK ITEMS (NOT ALL WORK ITEMS APPEAR ON EACH SHEET):

1. ASPHALT ROADWAY – SEE DETAIL A AND B, SHEET CS501. PROVIDE HEAVY DUTY PAVEMENT SECTION.
2. ASPHALT PAVEMENT – SEE DETAIL B, SHEET CS501. PROVIDE STANDARD DUTY PAVEMENT SECTION.
3. GRAVEL SURFACING – SEE DETAIL C, SHEET CS501.
4. PROVIDE WHEEL STOP – SEE DETAIL C, SHEET CS502.
5. PROVIDE ACCESSIBLE MARKINGS AND SIGNAGE – SEE DETAIL B, SHEET CS502.
6. PROVIDE STEEL BOLLARD – SEE DETAIL A, SHEET CS503.
7. CONCRETE SIDEWALK – SEE DETAIL B, SHEET CS503.
8. CONCRETE APRON – SEE DETAIL C, SHEET CS503.
9. SECURITY CHAIN LINK FENCE – SEE DETAIL A, SHEET CS504.
10. SIMULATED RAILROAD CROSSING – SEE DETAIL A, SHEET CS505.
11. SIMULATED BRIDGE OVERPASS – SEE DETAIL B, SHEET CS505.
12. SIGN TYPE AS INDICATED – SEE DETAIL D, SHEET CS502.
13. PAVEMENT MARKING, TYPE AS INDICATED – SEE DETAIL C, SHEET CS502.

CS101	CS105	CS109
CS102	CS106	CS110
CS103	CS107	CS111
CS104	CS108	CS112

SHEET INDEX

A ENLARGED SITE LAYOUT PLAN
SCALE: 1" = 20'

TN PN

NOTE:
SEE SHEET GI001 FOR BID ALTERNATE INFORMATION. ALL CIVIL WORK DEPICTED THIS SHEET IS BASE BID WORK UNLESS SPECIFICALLY DESIGNATED AS BID ALTERNATE WORK.

20 0 10 20 40
GRAPHIC SCALE: 1" = 20'

A·E engineering, P.A.
LICENSE NO. C-0706
A/E PROJECT #23020
AVOLIS ENGINEERING, P.A.
P.O. BOX 15564
NEW BERN, NC 28561
PH. (252) 633-0068
kevin@avoliseng.com

WALKER the GROUP ARCHITECTURE incorporated
PO BOX 541, NEW BERN, NC 28563
2526366778

Digitally signed by John K. Avolis
NORTH CAROLINA PROFESSIONAL SEAL 15738 ENGINEER JOHN K. AVOLIS
JULY 28, 2025

PUBLIC SAFETY TRAINING CENTER

525 Executive Pkwy
New Bern, NC 28562

BID DOCUMENTS

SCO # 24-27879-01A

Revisions
No. Date

Project Number
Date **7-28-2025**
Drawn **MSP**
Checked **JKA**
Scale **AS NOTED**
Drawing Title

ENLARGED SITE LAYOUT PLAN

Sheet Number **37** of **158**
Drawing Number
CS112

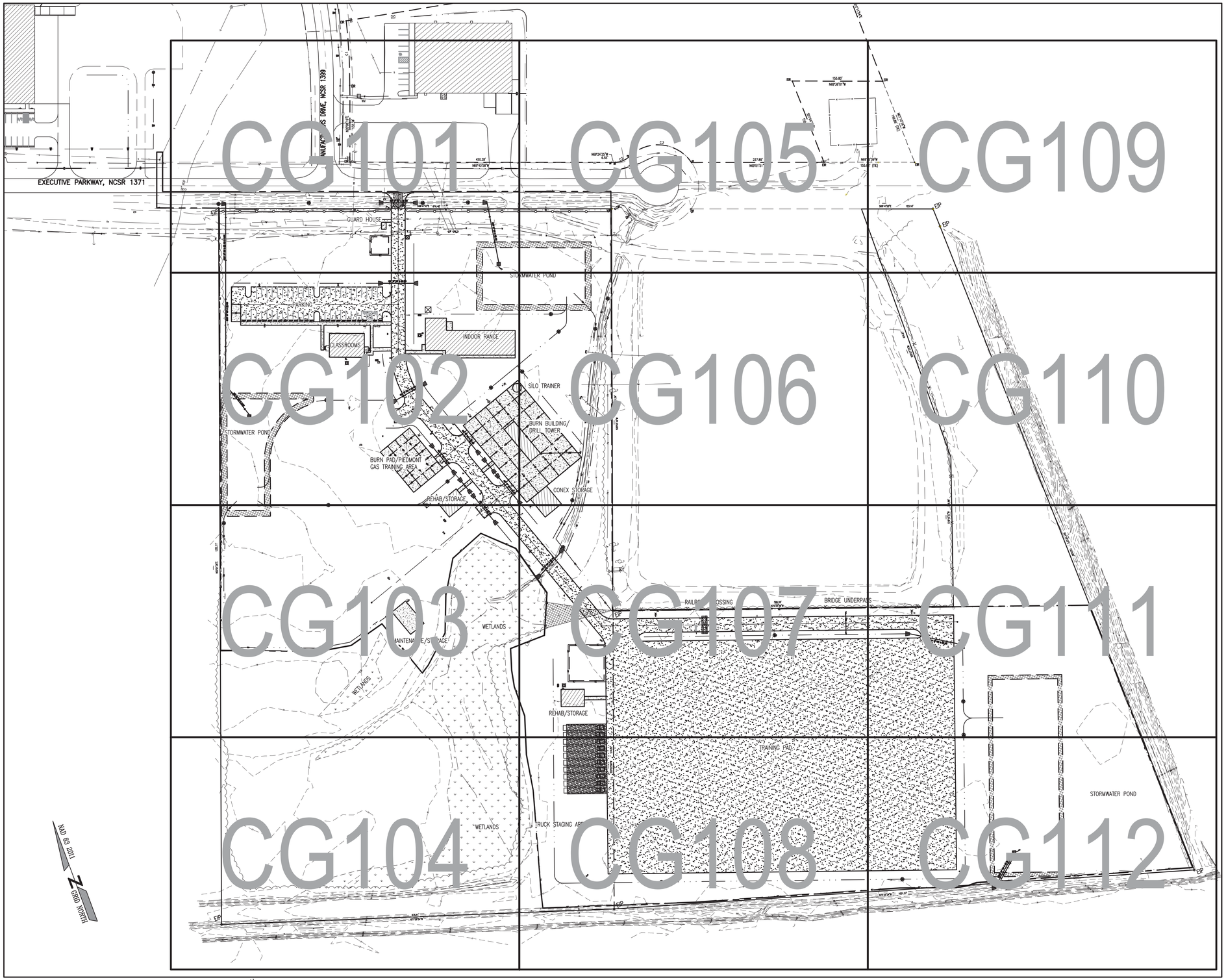

A OVERALL SITE GRADING PLAN

SCALE: 1" = 80'

TN PN

80 0 40 80 160

GRAPHIC SCALE: 1" = 80'

AVOLIS ENGINEERING, P.A.
P.O. BOX 15564
NEW BERN, NC 28561
PH. (252) 633-0068
kevin@avoliseng.com
LICENSE NO. C-0706
A/E PROJECT #23020

WALKER the GROUP ARCHITECTURE incorporated
PO BOX 541, NEW BERN, NC 28563
2526366778

Digitally signed by John K. Avolis
NORTH CAROLINA PROFESSIONAL SEAL 15738 ENGINEER JOHN K. AVOLIS
JULY 28, 2025

PUBLIC SAFETY TRAINING CENTER

525 Executive Pkwy
New Bern, NC 28562

BID DOCUMENTS

SCO # 24-27879-01A

No.	Date	Revisions

Project Number

Date **7-28-2025**

Drawn **MSP**

Checked **JKA**

Scale **AS NOTED**

Drawing Title

OVERALL SITE GRADING & EROSION CONTROL PLAN

Sheet Number **38** of **158**

Drawing Number

CG100

SPECIFIC WORK ITEMS (NOT ALL WORK ITEMS APPEAR ON EACH SHEET):

1. INSTALL SILT FENCE. SEE DETAIL A, SHEET CG503.
2. INSTALL GRAVEL CONTROL ENTRANCE. SEE DETAIL B, SHEET CG503.
3. INSTALL CHECK DAM. SEE DETAIL C, SHEET CG503.
4. INSTALL INLET/OUTLET PROTECTION. SEE DETAIL D, SHEET CG503.
5. INSTALL DROP INLET PROTECTION. SEE DETAIL E, SHEET CG503.
6. LINED SWALE. SEE DETAIL F, SHEET CG503.
7. DROP INLET. SEE DETAIL A, SHEET CG504.
8. STORM DRAIN PIPE, SIZE AND LENGTH AS INDICATED.
9. 4' HIGH BERM – 3' WIDE TOP, 3:1 SIDE SLOPES. PLANT TOP WITH 5 GAL CHINESE PRIVET (Ligustrum sinense) @ 6' OC ENTIRE LENGTH.
10. TEMPORARY DIVERSION DITCH – SEE DETAIL B, SHEET CG504.

EROSION CONTROL SYMBOL LEGEND:

- —SLT— · · · —SLT— = SILT FENCE, SEE DETAIL A, SHEET CG503.
- = GRAVEL CONTROL ENTRANCE, SEE DETAIL B, SHEET CG503.
- = CHECK DAM, SEE DETAIL C, SHEET CG503.
- = INLET/OUTLET PROTECTION, SEE DETAIL D, SHEET CG503.
- = DROP INLET PROTECTION, SEE DETAIL E, SHEET CG503.

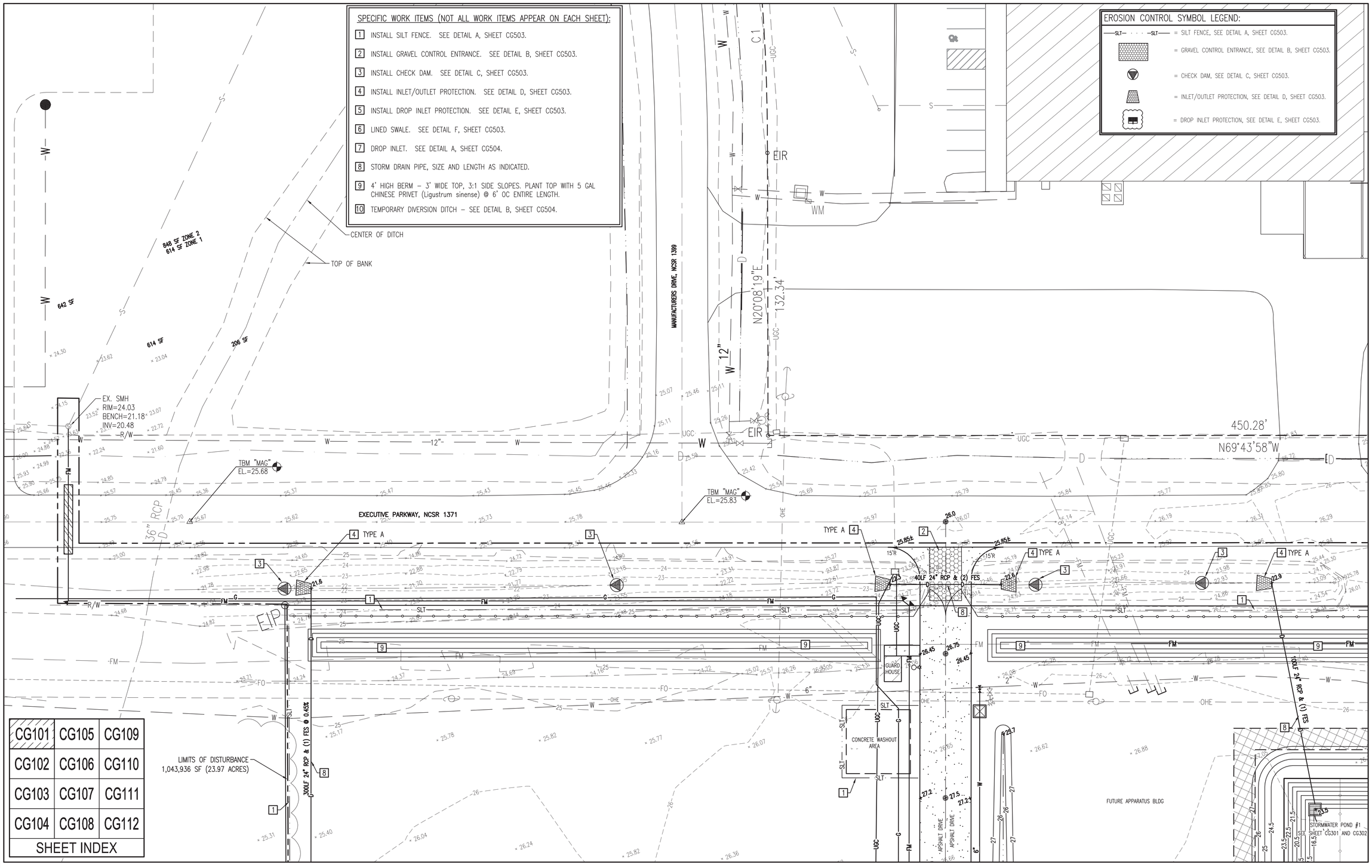

CG101	CG105	CG109
CG102	CG106	CG110
CG103	CG107	CG111
CG104	CG108	CG112
SHEET INDEX		

A ENLARGED SITE GRADING PLAN
SCALE: 1" = 20'

NOTE:
SEE SHEET GI001 FOR BID ALTERNATE INFORMATION. ALL CIVIL WORK DEPICTED THIS SHEET IS BASE BID WORK UNLESS SPECIFICALLY DESIGNATED AS BID ALTERNATE WORK.

20 0 10 20 40
GRAPHIC SCALE: 1" = 20'

LICENSE NO. C-0706
A/E PROJECT #23020
AVOLIS ENGINEERING, P.A.
P.O. BOX 15564
NEW BERN, NC 28561
PH. (252) 633-0068
kevin@avoliseng.com

WALKER the GROUP ARCHITECTURE incorporated
PO BOX 541, NEW BERN, NC 28563
2526366778

Digitally signed by John K. Avolis
NORTH CAROLINA PROFESSIONAL SEAL 15738 ENGINEER JOHN K. AVOLIS
JULY 28, 2025

PUBLIC SAFETY TRAINING CENTER

525 Executive Pkwy
New Bern, NC 28562

BID DOCUMENTS
SCO # 24-27879-01A

No.	Date	Revisions

Project Number
Date **7-28-2025**
Drawn **MSP**
Checked **JKA**
Scale **AS NOTED**
Drawing Title

ENLARGED SITE GRADING & EROSION CONTROL PLAN

Sheet Number **39** Of **158**
Drawing Number
CG101

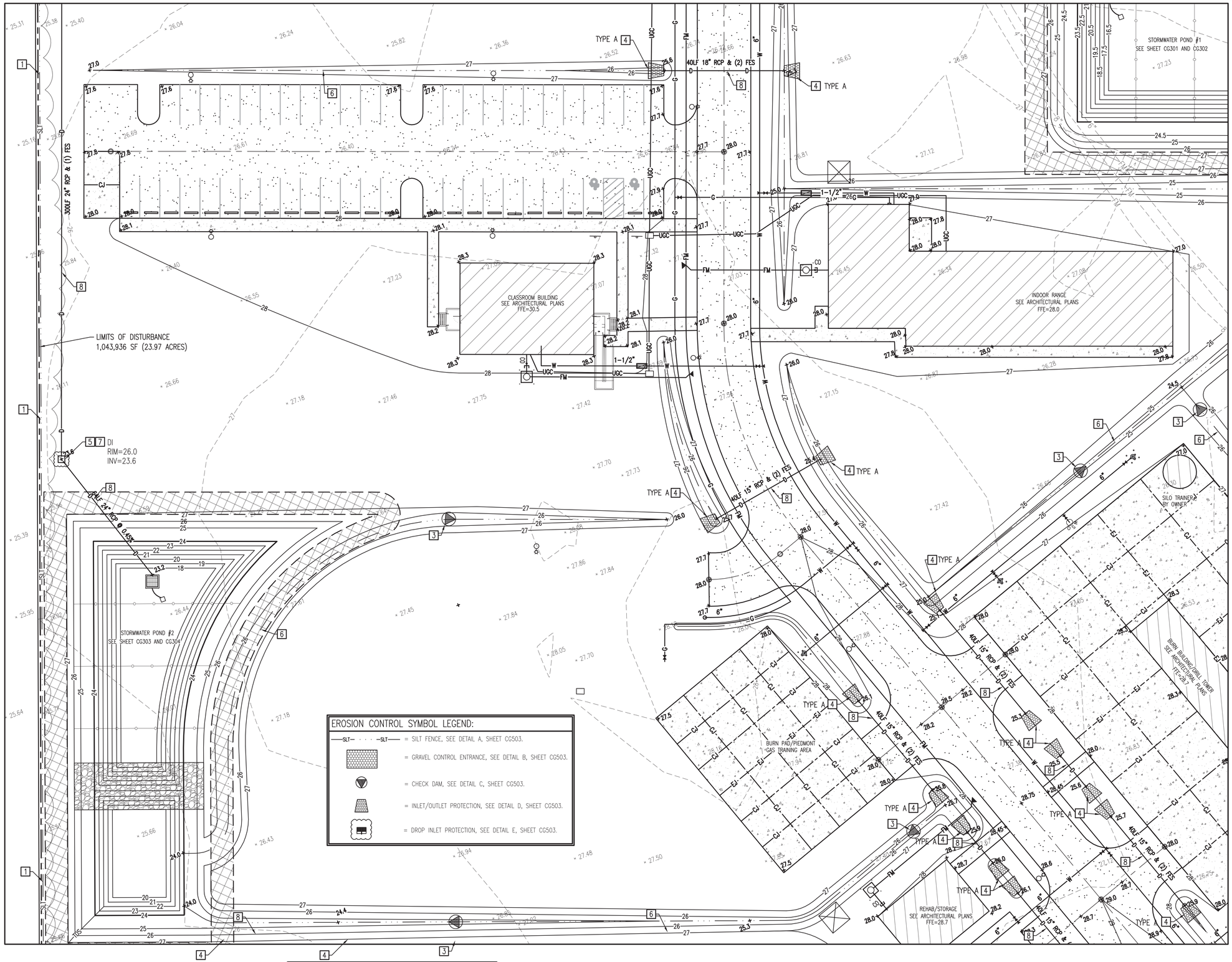

CG101	CG105	CG109
CG102	CG106	CG110
CG103	CG107	CG111
CG104	CG108	CG112

SHEET INDEX

EROSION CONTROL SYMBOL LEGEND:

- SLT — SILT FENCE, SEE DETAIL A, SHEET CG503.
- GRAVEL CONTROL ENTRANCE, SEE DETAIL B, SHEET CG503.
- CHECK DAM, SEE DETAIL C, SHEET CG503.
- INLET/OUTLET PROTECTION, SEE DETAIL D, SHEET CG503.
- DROP INLET PROTECTION, SEE DETAIL E, SHEET CG503.

A ENLARGED SITE GRADING PLAN

SCALE: 1" = 20'

NOTE:
SEE SHEET GI001 FOR BID ALTERNATE INFORMATION. ALL CIVIL WORK DEPICTED THIS SHEET IS BASE BID WORK UNLESS SPECIFICALLY DESIGNATED AS BID ALTERNATE WORK.

SEE SHEET CG101 FOR WORK ITEM TABLE

GRAPHIC SCALE: 1" = 20'

AVOLIS ENGINEERING, P.A.
P.O. BOX 15564
NEW BERN, NC 28561
PH. (252) 633-0068
kevin@avoliseng.com
LICENSE NO. C-0706
A/E PROJECT #23020

WALKER the GROUP ARCHITECTURE incorporated
PO BOX 541, NEW BERN, NC 28563
2526366778

Digitally signed by John K. Avolis
NORTH CAROLINA PROFESSIONAL SEAL 15738 ENGINEER JOHN K. AVOLIS
JULY 28, 2025

PUBLIC SAFETY TRAINING CENTER

525 Executive Pkwy
New Bern, NC 28562

BID DOCUMENTS

SCO # 24-27879-01A

Revisions

No.	Date

Project Number

Date **7-28-2025**

Drawn **MSP**

Checked **JKA**

Scale **AS NOTED**

Drawing Title

ENLARGED SITE GRADING & EROSION CONTROL PLAN

Sheet Number **40** of **158**

Drawing Number

CG102

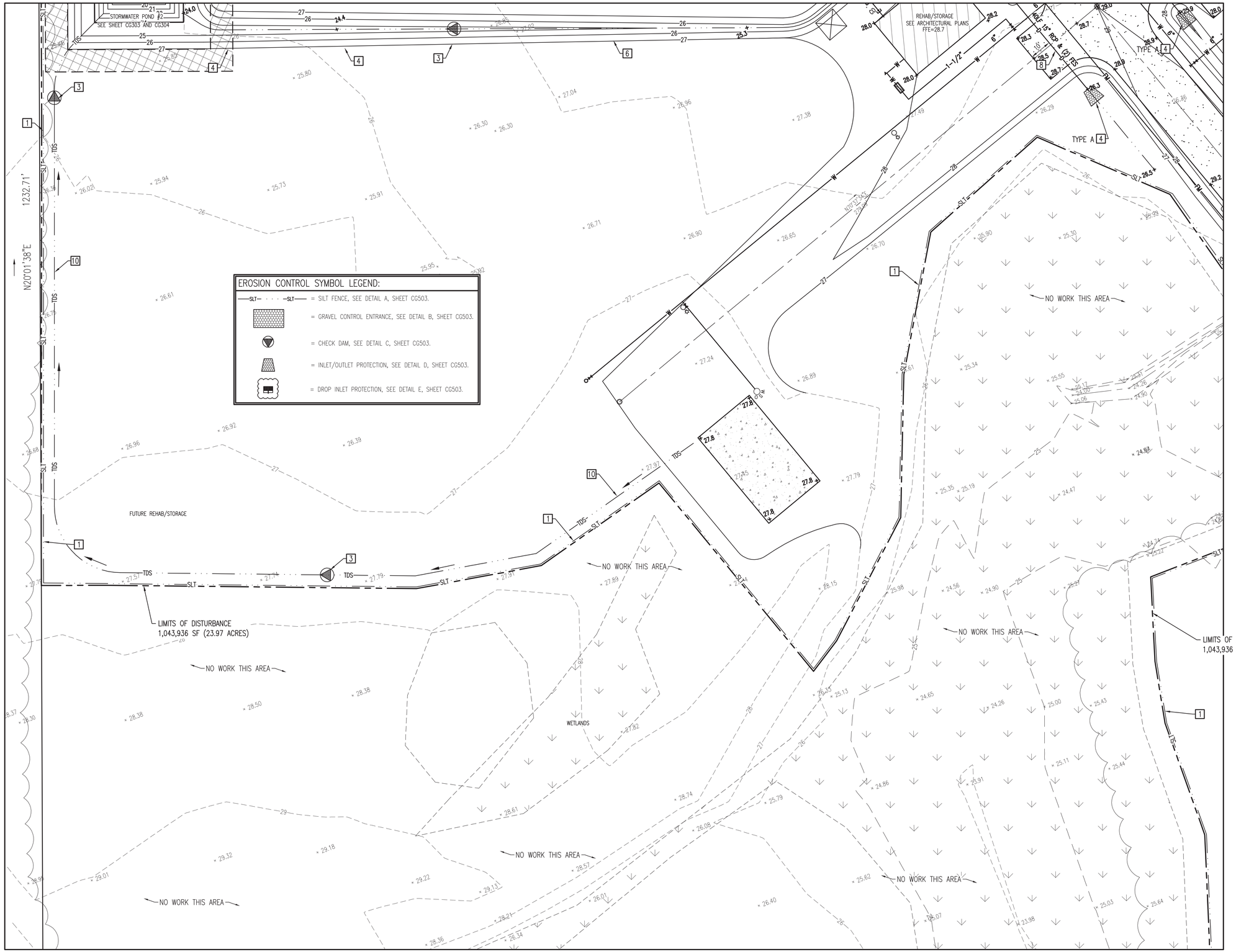

CG101	CG105	CG109
CG102	CG106	CG110
CG103	CG107	CG111
CG104	CG108	CG112

SHEET INDEX

A ENLARGED SITE GRADING PLAN

SCALE: 1" = 20'

TN PN

NOTE:
SEE SHEET GI001 FOR BID ALTERNATE INFORMATION. ALL CIVIL WORK DEPICTED THIS SHEET IS BASE BID WORK UNLESS SPECIFICALLY DESIGNATED AS BID ALTERNATE WORK.

SEE SHEET CG101 FOR WORK ITEM TABLE

20 0 10 20 40
GRAPHIC SCALE: 1" = 20'

AVOLIS ENGINEERING, P.A.
P.O. BOX 15564
NEW BERN, NC 28561
PH. (252) 633-0068
kevin@avoliseng.com
LICENSE NO. C-0706
A/E PROJECT #23020

WALKER the GROUP ARCHITECTURE incorporated
PO BOX 541, NEW BERN, NC 28563
2526366778

Digitally signed by John K. Avolis
NORTH CAROLINA PROFESSIONAL SEAL 15738 ENGINEER JOHN K. AVOLIS
JULY 28, 2025

PUBLIC SAFETY TRAINING CENTER

525 Executive Pkwy
New Bern, NC 28562

BID DOCUMENTS
SCO # 24-27879-01A

Revisions
No. Date

Project Number
Date **7-28-2025**
Drawn **MSP**
Checked **JKA**
Scale **AS NOTED**
Drawing Title

ENLARGED SITE GRADING & EROSION CONTROL PLAN

Sheet Number **41** of **158**
Drawing Number
CG103

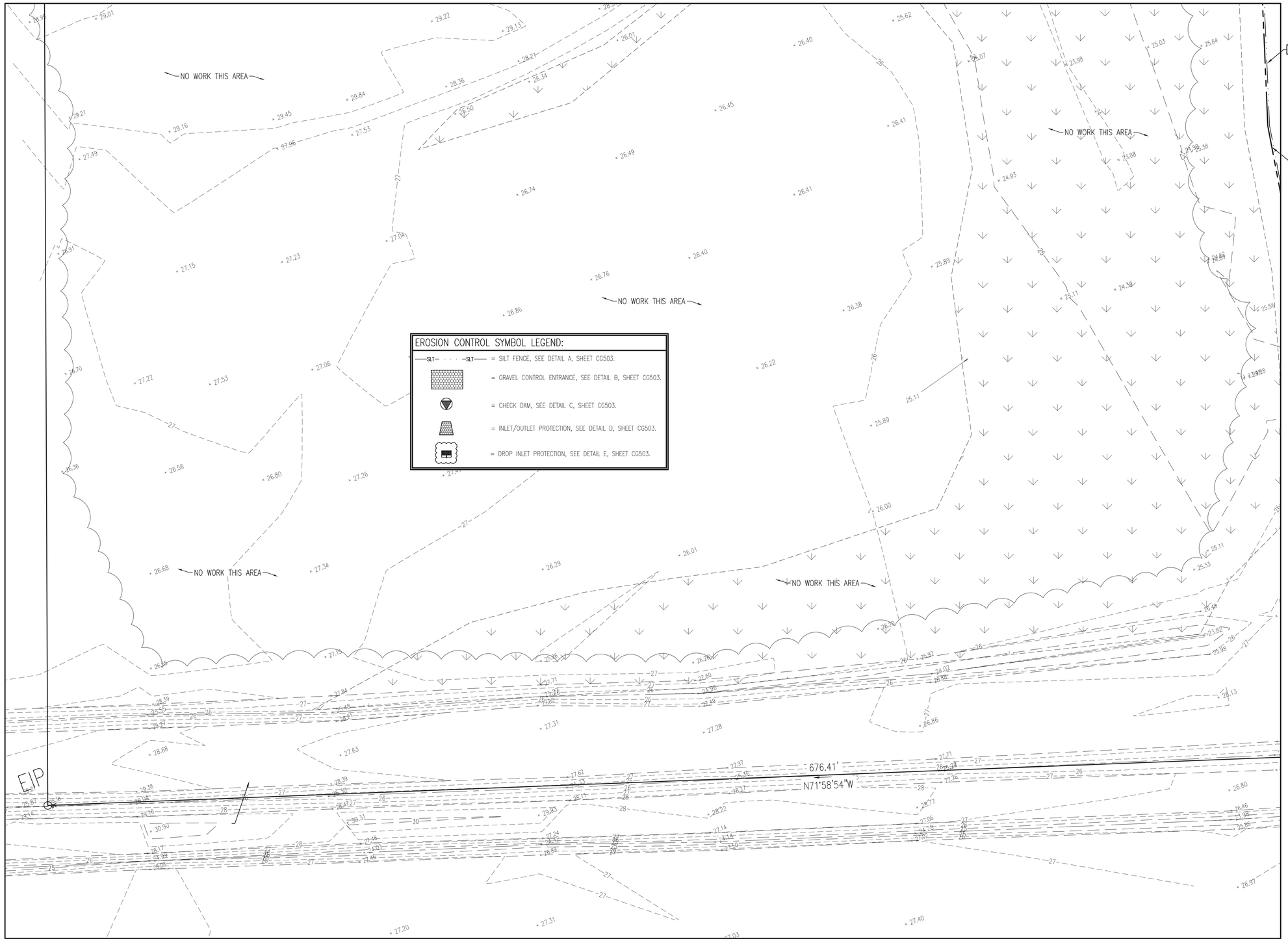

CG101	CG105	CG109
CG102	CG106	CG110
CG103	CG107	CG111
CG104	CG108	CG112

SHEET INDEX

A ENLARGED SITE GRADING PLAN

SCALE: 1" = 20'

TN PN

NOTE:
SEE SHEET GI001 FOR BID ALTERNATE INFORMATION. ALL CIVIL WORK DEPICTED THIS SHEET IS BASE BID WORK UNLESS SPECIFICALLY DESIGNATED AS BID ALTERNATE WORK.

SEE SHEET CG101 FOR WORK ITEM TABLE

20 0 10 20 40
GRAPHIC SCALE: 1" = 20'

AVOLIS ENGINEERING, P.A.
P.O. BOX 15564
NEW BERN, NC 28561
PH. (252) 633-0068
kevin@avoliseng.com
LICENSE NO. C-0706
A/E PROJECT #23020

WALKER the GROUP ARCHITECTURE incorporated
PO BOX 541, NEW BERN, NC 28563
2526366778

Digitally signed by John K Avolis
NORTH CAROLINA PROFESSIONAL SEAL 15738 ENGINEER JOHN K AVOLIS
JULY 28, 2025

PUBLIC SAFETY TRAINING CENTER

525 Executive Pkwy
New Bern, NC 28562

BID DOCUMENTS
SCO # 24-27879-01A

No.	Date	Revisions

Project Number

Date **7-28-2025**

Drawn **MSP**

Checked **JKA**

Scale **AS NOTED**

Drawing Title

ENLARGED SITE GRADING & EROSION CONTROL PLAN

Sheet Number **42** of **158**

Drawing Number

CG104

CG101	CG105	CG109
CG102	CG106	CG110
CG103	CG107	CG111
CG104	CG108	CG112

SHEET INDEX

EROSION CONTROL SYMBOL LEGEND:

- —SLT— · · · —SLT— = SILT FENCE, SEE DETAIL A, SHEET CG503.
- = GRAVEL CONTROL ENTRANCE, SEE DETAIL B, SHEET CG503.
- = CHECK DAM, SEE DETAIL C, SHEET CG503.
- = INLET/OUTLET PROTECTION, SEE DETAIL D, SHEET CG503.
- = DROP INLET PROTECTION, SEE DETAIL E, SHEET CG503.

SPECIFIC WORK ITEMS (NOT ALL WORK ITEMS APPEAR ON EACH SHEET):

1. INSTALL SILT FENCE. SEE DETAIL A, SHEET CG503.
2. INSTALL GRAVEL CONTROL ENTRANCE. SEE DETAIL B, SHEET CG503.
3. INSTALL CHECK DAM. SEE DETAIL C, SHEET CG503.
4. INSTALL INLET/OUTLET PROTECTION. SEE DETAIL D, SHEET CG503.
5. INSTALL DROP INLET PROTECTION. SEE DETAIL E, SHEET CG503.
6. LINED SWALE. SEE DETAIL F, SHEET CG503.
7. DROP INLET. SEE DETAIL A, SHEET CG504.
8. STORM DRAIN PIPE, SIZE AND LENGTH AS INDICATED.
9. 4' HIGH BERM – 3' WIDE TOP, 3:1 SIDE SLOPES. PLANT TOP WITH 5 GAL CHINESE PRIVET (Ligustrum sinense) @ 6' OC ENTIRE LENGTH.

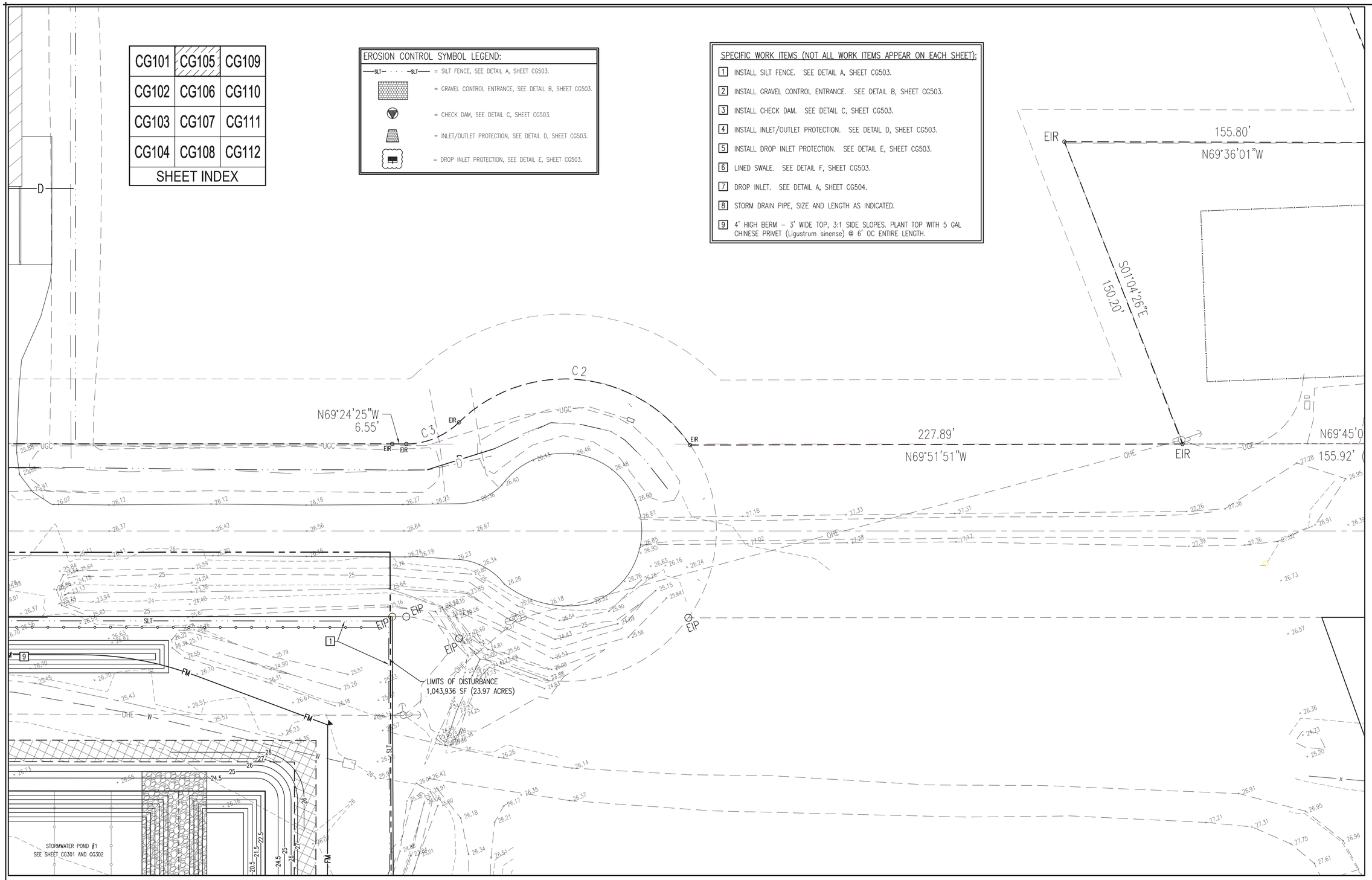

A ENLARGED SITE GRADING PLAN

SCALE: 1" = 20'

TN PN

NOTE:
SEE SHEET GI001 FOR BID ALTERNATE INFORMATION. ALL CIVIL WORK DEPICTED THIS SHEET IS BASE BID WORK UNLESS SPECIFICALLY DESIGNATED AS BID ALTERNATE WORK.

20 0 10 20 40
GRAPHIC SCALE: 1" = 20'

AVOLIS ENGINEERING, P.A.
P.O. BOX 15564
NEW BERN, NC 28561
PH. (252) 633-0068
kevin@avoliseng.com
LICENSE NO. C-0706
A/E PROJECT #23020

WALKER the GROUP ARCHITECTURE incorporated
PO BOX 541, NEW BERN, NC 28563
2526366778

Digitally signed by John K. Avolis
NORTH CAROLINA PROFESSIONAL SEAL 15738 ENGINEER JOHN K. AVOLIS
JULY 28, 2025

PUBLIC SAFETY TRAINING CENTER

525 Executive Pkwy
New Bern, NC 28562

BID DOCUMENTS

SCO # 24-27879-01A

No.	Date	Revisions

Project Number

Date **7-28-2025**

Drawn **MSP**

Checked **JKA**

Scale **AS NOTED**

Drawing Title

ENLARGED SITE GRADING & EROSION CONTROL PLAN

Sheet Number **43** of **158**

Drawing Number

CG105

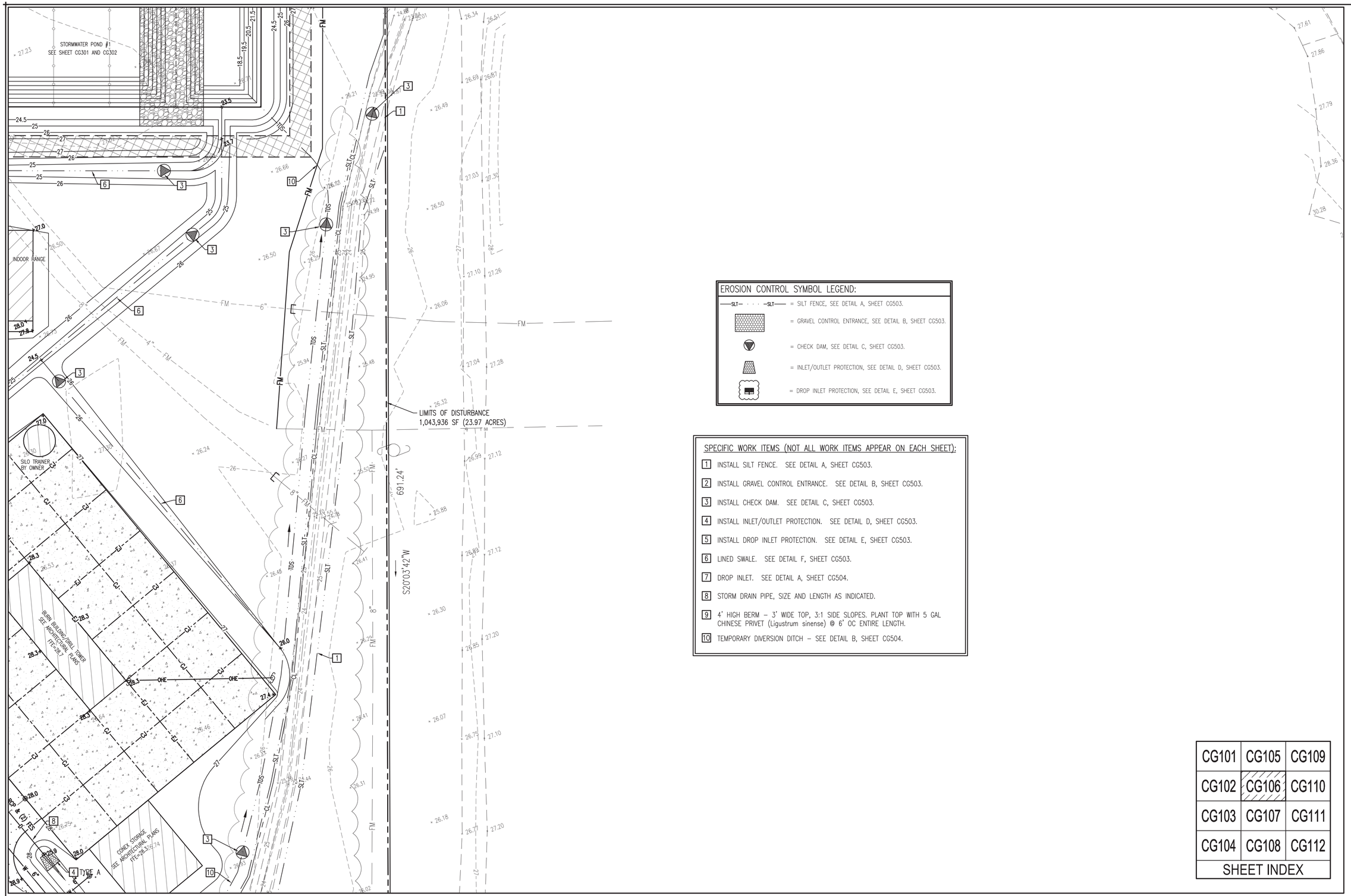

EROSION CONTROL SYMBOL LEGEND:

- —SLT— · · · —SLT— = SILT FENCE, SEE DETAIL A, SHEET CG503.
- = GRAVEL CONTROL ENTRANCE, SEE DETAIL B, SHEET CG503.
- = CHECK DAM, SEE DETAIL C, SHEET CG503.
- = INLET/OUTLET PROTECTION, SEE DETAIL D, SHEET CG503.
- = DROP INLET PROTECTION, SEE DETAIL E, SHEET CG503.

SPECIFIC WORK ITEMS (NOT ALL WORK ITEMS APPEAR ON EACH SHEET):

1. INSTALL SILT FENCE. SEE DETAIL A, SHEET CG503.
2. INSTALL GRAVEL CONTROL ENTRANCE. SEE DETAIL B, SHEET CG503.
3. INSTALL CHECK DAM. SEE DETAIL C, SHEET CG503.
4. INSTALL INLET/OUTLET PROTECTION. SEE DETAIL D, SHEET CG503.
5. INSTALL DROP INLET PROTECTION. SEE DETAIL E, SHEET CG503.
6. LINED SWALE. SEE DETAIL F, SHEET CG503.
7. DROP INLET. SEE DETAIL A, SHEET CG504.
8. STORM DRAIN PIPE, SIZE AND LENGTH AS INDICATED.
9. 4' HIGH BERM – 3' WIDE TOP, 3:1 SIDE SLOPES. PLANT TOP WITH 5 GAL CHINESE PRIVET (Ligustrum sinense) @ 6' OC ENTIRE LENGTH.
10. TEMPORARY DIVERSION DITCH – SEE DETAIL B, SHEET CG504.

CG101	CG105	CG109
CG102	CG106	CG110
CG103	CG107	CG111
CG104	CG108	CG112

SHEET INDEX

A ENLARGED SITE GRADING PLAN

SCALE: 1" = 20'

TN PN

NOTE:
SEE SHEET GI001 FOR BID ALTERNATE INFORMATION. ALL CIVIL WORK DEPICTED THIS SHEET IS BASE BID WORK UNLESS SPECIFICALLY DESIGNATED AS BID ALTERNATE WORK.

20 0 10 20 40
GRAPHIC SCALE: 1" = 20'

LICENSE NO. C-0706
A/E PROJECT #23020
AVOLIS ENGINEERING, P.A.
P.O. BOX 15564
NEW BERN, NC 28561
PH. (252) 633-0068
kevin@avoliseng.com

WALKER the GROUP ARCHITECTURE incorporated
PO BOX 541, NEW BERN, NC 28563
2526366778

Digitally signed by John K Avolis
NORTH CAROLINA PROFESSIONAL SEAL 15738 ENGINEER JOHN K AVOLIS
JULY 28, 2025

PUBLIC SAFETY TRAINING CENTER

525 Executive Pkwy
New Bern, NC 28562

BID DOCUMENTS
SCO # 24-27879-01A

Revisions
No. Date

Project Number
Date **7-28-2025**
Drawn **MSP**
Checked **JKA**
Scale **AS NOTED**
Drawing Title

ENLARGED SITE GRADING & EROSION CONTROL PLAN

Sheet Number **44** Of **158**
Drawing Number
CG106

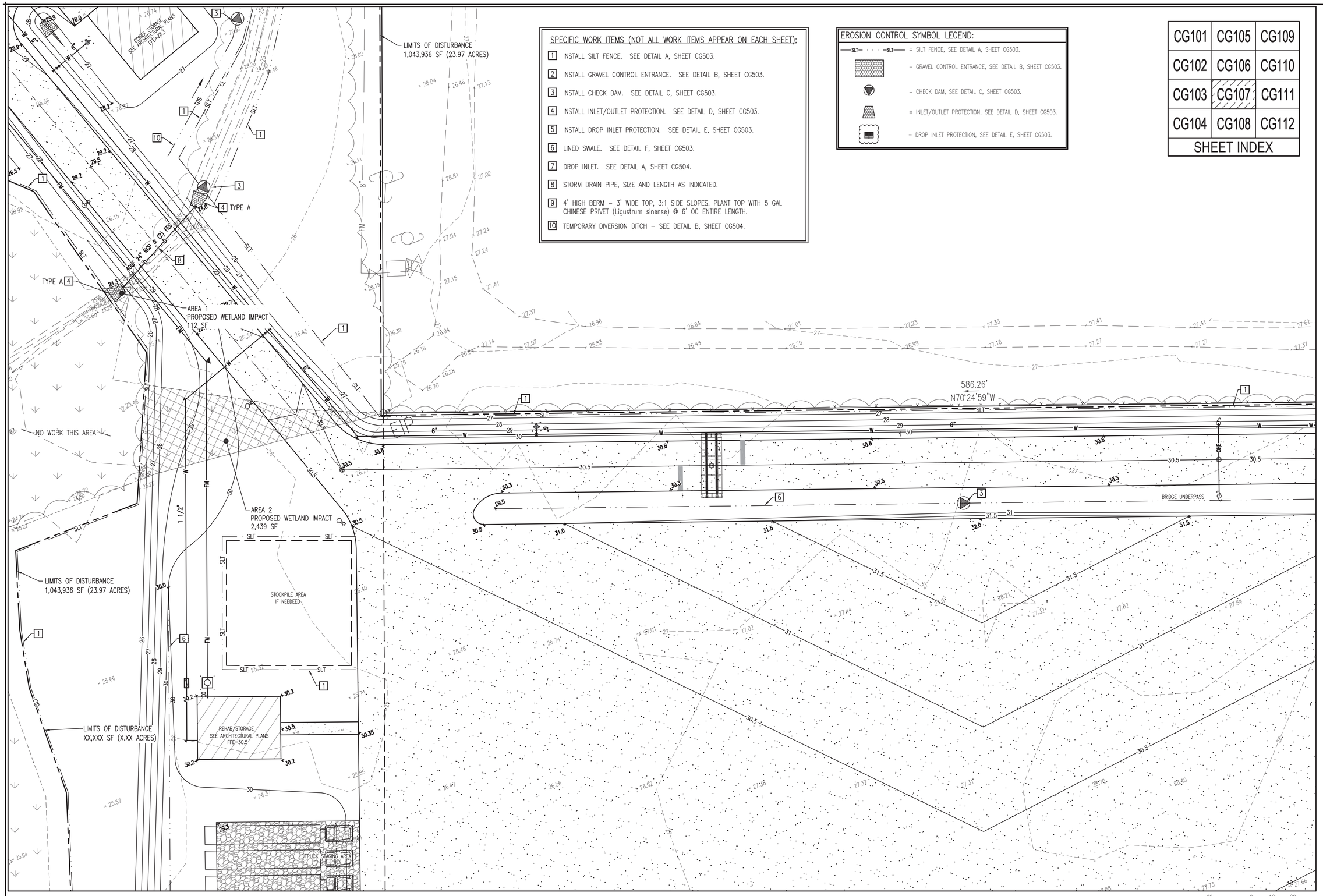

SPECIFIC WORK ITEMS (NOT ALL WORK ITEMS APPEAR ON EACH SHEET):

1. INSTALL SILT FENCE. SEE DETAIL A, SHEET CG503.
2. INSTALL GRAVEL CONTROL ENTRANCE. SEE DETAIL B, SHEET CG503.
3. INSTALL CHECK DAM. SEE DETAIL C, SHEET CG503.
4. INSTALL INLET/OUTLET PROTECTION. SEE DETAIL D, SHEET CG503.
5. INSTALL DROP INLET PROTECTION. SEE DETAIL E, SHEET CG503.
6. LINED SWALE. SEE DETAIL F, SHEET CG503.
7. DROP INLET. SEE DETAIL A, SHEET CG504.
8. STORM DRAIN PIPE, SIZE AND LENGTH AS INDICATED.
9. 4' HIGH BERM – 3' WIDE TOP, 3:1 SIDE SLOPES. PLANT TOP WITH 5 GAL CHINESE PRIVET (Ligustrum sinense) @ 6' OC ENTIRE LENGTH.
10. TEMPORARY DIVERSION DITCH – SEE DETAIL B, SHEET CG504.

EROSION CONTROL SYMBOL LEGEND:

- —SLT— · · · —SLT— = SILT FENCE, SEE DETAIL A, SHEET CG503.
- = GRAVEL CONTROL ENTRANCE, SEE DETAIL B, SHEET CG503.
- = CHECK DAM, SEE DETAIL C, SHEET CG503.
- = INLET/OUTLET PROTECTION, SEE DETAIL D, SHEET CG503.
- = DROP INLET PROTECTION, SEE DETAIL E, SHEET CG503.

SHEET INDEX

CG101	CG105	CG109
CG102	CG106	CG110
CG103	CG107	CG111
CG104	CG108	CG112

A ENLARGED SITE GRADING PLAN

SCALE: 1" = 20'

NOTE:
SEE SHEET GI001 FOR BID ALTERNATE INFORMATION. ALL CIVIL WORK DEPICTED THIS SHEET IS BASE BID WORK UNLESS SPECIFICALLY DESIGNATED AS BID ALTERNATE WORK.

GRAPHIC SCALE: 1" = 20'

AVOLIS ENGINEERING, P.A.
P.O. BOX 15564
NEW BERN, NC 28561
PH. (252) 633-0068
kevin@avoliseng.com
LICENSE NO. C-0706
A/E PROJECT #23020

WALKER the GROUP ARCHITECTURE incorporated
PO BOX 541, NEW BERN, NC 28563
2526366778

Digitally signed by John K. Avolis
NORTH CAROLINA PROFESSIONAL SEAL 15738 ENGINEER JOHN K. AVOLIS
JULY 28, 2025

PUBLIC SAFETY TRAINING CENTER

525 Executive Pkwy
New Bern, NC 28562

BID DOCUMENTS

SCO # 24-27879-01A

No.	Date	Revisions

Project Number

Date **7-28-2025**

Drawn **MSP**

Checked **JKA**

Scale **AS NOTED**

Drawing Title

ENLARGED SITE GRADING & EROSION CONTROL PLAN

Sheet Number **45** of **158**

Drawing Number

CG107

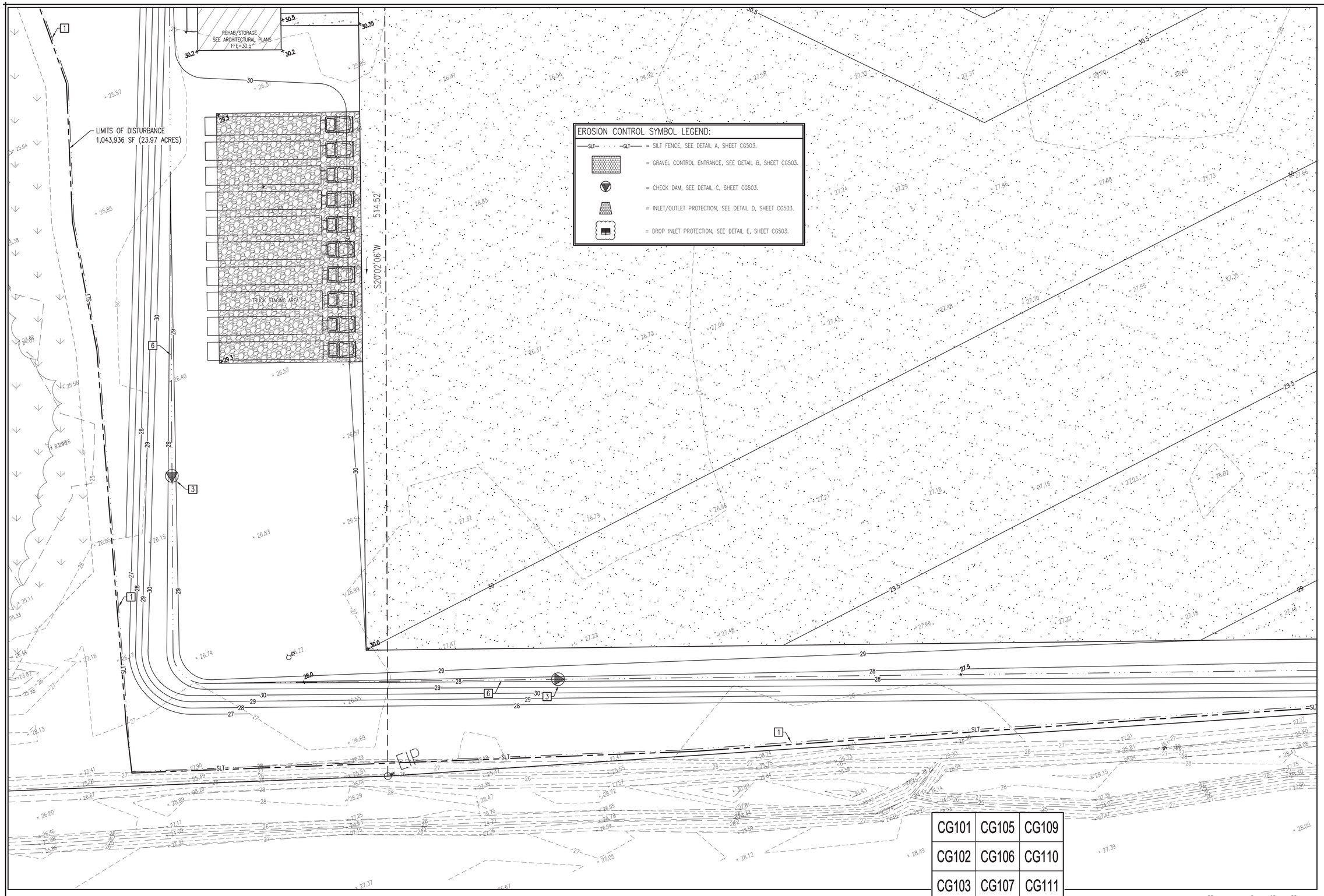

CG101	CG105	CG109
CG102	CG106	CG110
CG103	CG107	CG111
CG104	CG108	CG112

SHEET INDEX

A ENLARGED SITE GRADING PLAN

SCALE: 1" = 20'

TN PN

NOTE:
SEE SHEET GI001 FOR BID ALTERNATE INFORMATION. ALL CIVIL WORK DEPICTED THIS SHEET IS BASE BID WORK UNLESS SPECIFICALLY DESIGNATED AS BID ALTERNATE WORK.

SEE SHEET CG101 FOR WORK ITEM TABLE

20 0 10 20 40
GRAPHIC SCALE: 1" = 20'

AVOLIS ENGINEERING, P.A.
P.O. BOX 15564
NEW BERN, NC 28561
PH. (252) 633-0068
kevin@avoliseng.com
LICENSE NO. C-0706
A/E PROJECT #23020

WALKER the GROUP ARCHITECTURE incorporated
PO BOX 541, NEW BERN, NC 28563
2526366778

Digitally signed by John K. Avolis
NORTH CAROLINA PROFESSIONAL SEAL 15738 ENGINEER JOHN K. AVOLIS
JULY 28, 2025

PUBLIC SAFETY TRAINING CENTER

525 Executive Pkwy
New Bern, NC 28562

BID DOCUMENTS
SCO # 24-27879-01A

No.	Date	Revisions

Project Number

Date **7-28-2025**

Drawn **MSP**

Checked **JKA**

Scale **AS NOTED**

Drawing Title

ENLARGED SITE GRADING & EROSION CONTROL PLAN

Sheet Number **46** of **158**

Drawing Number

CG108

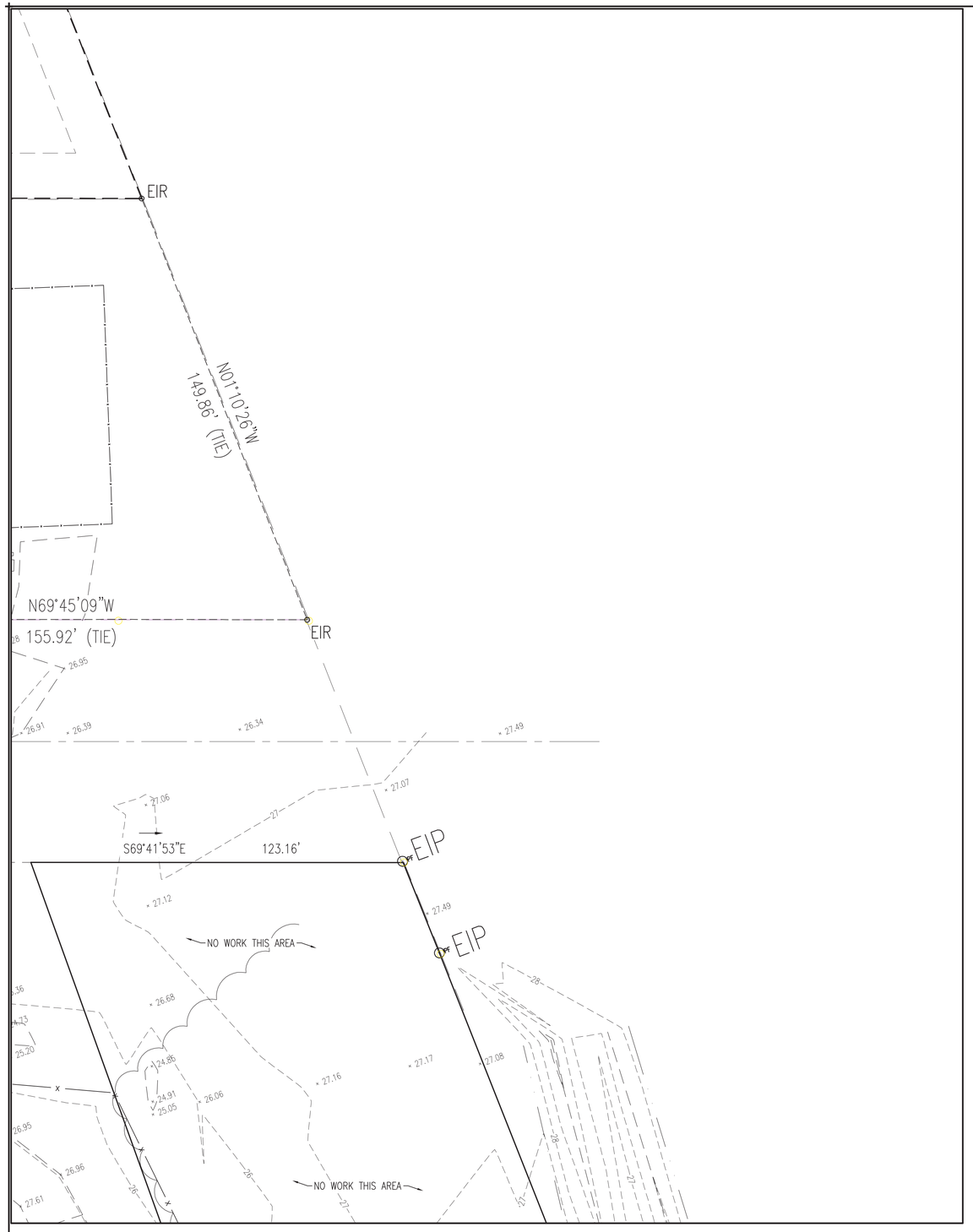

A ENLARGED SITE GRADING PLAN

SCALE: 1" = 20'

NOTE:
SEE SHEET GI001 FOR BID ALTERNATE INFORMATION.
ALL CIVIL WORK DEPICTED THIS SHEET IS BASE BID WORK UNLESS SPECIFICALLY DESIGNATED AS BID ALTERNATE WORK.

SPECIFIC WORK ITEMS (NOT ALL WORK ITEMS APPEAR ON EACH SHEET):

1. INSTALL SILT FENCE. SEE DETAIL A, SHEET CG503.
2. INSTALL GRAVEL CONTROL ENTRANCE. SEE DETAIL B, SHEET CG503.
3. INSTALL CHECK DAM. SEE DETAIL C, SHEET CG503.
4. INSTALL INLET/OUTLET PROTECTION. SEE DETAIL D, SHEET CG503.
5. INSTALL DROP INLET PROTECTION. SEE DETAIL E, SHEET CG503.
6. LINED SWALE. SEE DETAIL F, SHEET CG503.
7. DROP INLET. SEE DETAIL A, SHEET CG504.
8. STORM DRAIN PIPE, SIZE AND LENGTH AS INDICATED.

EROSION CONTROL SYMBOL LEGEND:

—SLT— · · · —SLT— = SILT FENCE, SEE DETAIL A, SHEET CG503.
= GRAVEL CONTROL ENTRANCE, SEE DETAIL B, SHEET CG503.
= CHECK DAM, SEE DETAIL C, SHEET CG503.
= INLET/OUTLET PROTECTION, SEE DETAIL D, SHEET CG503.
= DROP INLET PROTECTION, SEE DETAIL E, SHEET CG503.

CG101	CG105	CG109
CG102	CG106	CG110
CG103	CG107	CG111
CG104	CG108	CG112

SHEET INDEX

GRAPHIC SCALE: 1" = 20'

AVOLIS ENGINEERING, P.A.
P.O. BOX 15564
NEW BERN, NC 28561
PH. (252) 633-0068
kevin@avoliseng.com
LICENSE NO. C-0706
A/E PROJECT #23020

WALKER the GROUP ARCHITECTURE incorporated
PO BOX 541, NEW BERN, NC 28563
2526366778

Digitally signed by John K. Avolis
NORTH CAROLINA PROFESSIONAL SEAL 15738 ENGINEER JOHN K. AVOLIS
JULY 28, 2025

PUBLIC SAFETY TRAINING CENTER

525 Executive Pkwy
New Bern, NC 28562

BID DOCUMENTS
SCO # 24-27879-01A

No.	Date	Revisions

Project Number

Date **7-28-2025**

Drawn **MSP**

Checked **JKA**

Scale **AS NOTED**

Drawing Title

ENLARGED SITE GRADING & EROSION CONTROL PLAN

Sheet Number **47** of **158**

Drawing Number

CG109

A ENLARGED SITE GRADING PLAN

SCALE: 1" = 20'

TN PN

NOTE:
SEE SHEET GI001 FOR BID ALTERNATE INFORMATION. ALL CIVIL WORK DEPICTED THIS SHEET IS BASE BID WORK UNLESS SPECIFICALLY DESIGNATED AS BID ALTERNATE WORK.

CG101	CG105	CG109
CG102	CG106	CG110
CG103	CG107	CG111
CG104	CG108	CG112

SHEET INDEX

SPECIFIC WORK ITEMS (NOT ALL WORK ITEMS APPEAR ON EACH SHEET):

1. INSTALL SILT FENCE. SEE DETAIL A, SHEET CG503.
2. INSTALL GRAVEL CONTROL ENTRANCE. SEE DETAIL B, SHEET CG503.
3. INSTALL CHECK DAM. SEE DETAIL C, SHEET CG503.
4. INSTALL INLET/OUTLET PROTECTION. SEE DETAIL D, SHEET CG503.
5. INSTALL DROP INLET PROTECTION. SEE DETAIL E, SHEET CG503.
6. LINED SWALE. SEE DETAIL F, SHEET CG503.
7. DROP INLET. SEE DETAIL A, SHEET CG504.
8. STORM DRAIN PIPE, SIZE AND LENGTH AS INDICATED.

EROSION CONTROL SYMBOL LEGEND:

—SLT— · · · —SLT— = SILT FENCE, SEE DETAIL A, SHEET CG503.

= GRAVEL CONTROL ENTRANCE, SEE DETAIL B, SHEET CG503.

= CHECK DAM, SEE DETAIL C, SHEET CG503.

= INLET/OUTLET PROTECTION, SEE DETAIL D, SHEET CG503.

= DROP INLET PROTECTION, SEE DETAIL E, SHEET CG503.

20 0 10 20 40

GRAPHIC SCALE: 1" = 20'

AVOLIS ENGINEERING, P.A.
P.O. BOX 15564
NEW BERN, NC 28561
PH. (252) 633-0068
kevin@avoliseng.com
LICENSE NO. C-0706
A/E PROJECT #23020

WALKER the GROUP ARCHITECTURE incorporated
PO BOX 541, NEW BERN, NC 28563
2526366778

Digitally signed by John K. Avolis
NORTH CAROLINA PROFESSIONAL SEAL 15738 ENGINEER JOHN K. AVOLIS
JULY 28, 2025

PUBLIC SAFETY TRAINING CENTER

525 Executive Pkwy
New Bern, NC 28562

BID DOCUMENTS

SCO # 24-27879-01A

No.	Date	Revisions

Project Number

Date **7-28-2025**

Drawn **MSP**

Checked **JKA**

Scale **AS NOTED**

Drawing Title

ENLARGED SITE GRADING & EROSION CONTROL PLAN

Sheet Number **48** of **158**

Drawing Number

CG110

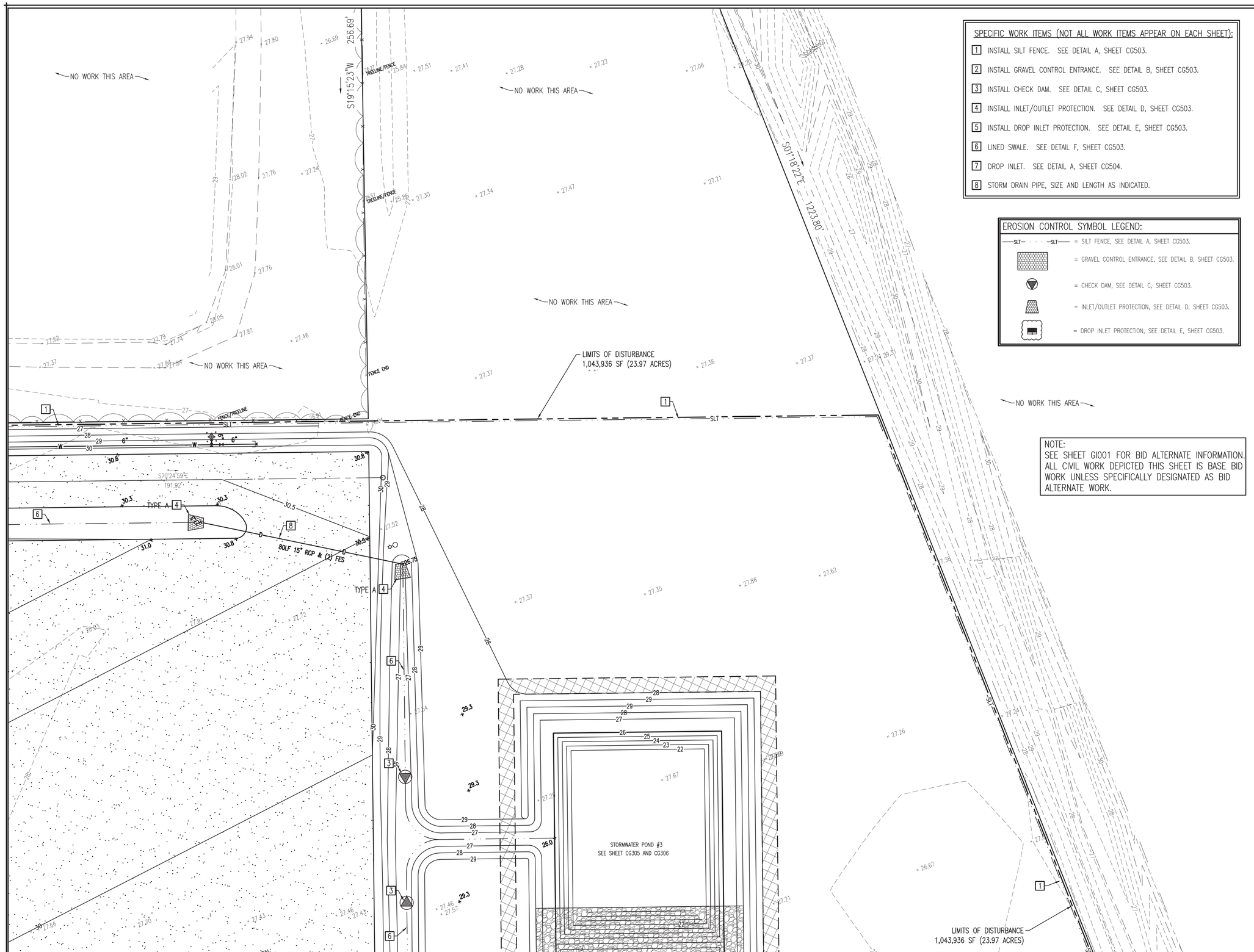

SPECIFIC WORK ITEMS (NOT ALL WORK ITEMS APPEAR ON EACH SHEET):

1. INSTALL SILT FENCE. SEE DETAIL A, SHEET CG503.
2. INSTALL GRAVEL CONTROL ENTRANCE. SEE DETAIL B, SHEET CG503.
3. INSTALL CHECK DAM. SEE DETAIL C, SHEET CG503.
4. INSTALL INLET/OUTLET PROTECTION. SEE DETAIL D, SHEET CG503.
5. INSTALL DROP INLET PROTECTION. SEE DETAIL E, SHEET CG503.
6. LINED SWALE. SEE DETAIL F, SHEET CG503.
7. DROP INLET. SEE DETAIL A, SHEET CG504.
8. STORM DRAIN PIPE, SIZE AND LENGTH AS INDICATED.

EROSION CONTROL SYMBOL LEGEND:

- —SLT— · · · —SLT— = SILT FENCE, SEE DETAIL A, SHEET CG503.
- = GRAVEL CONTROL ENTRANCE, SEE DETAIL B, SHEET CG503.
- = CHECK DAM, SEE DETAIL C, SHEET CG503.
- = INLET/OUTLET PROTECTION, SEE DETAIL D, SHEET CG503.
- = DROP INLET PROTECTION, SEE DETAIL E, SHEET CG503.

NOTE:
SEE SHEET GI001 FOR BID ALTERNATE INFORMATION. ALL CIVIL WORK DEPICTED THIS SHEET IS BASE BID WORK UNLESS SPECIFICALLY DESIGNATED AS BID ALTERNATE WORK.

A ENLARGED SITE GRADING PLAN

SCALE: 1" = 20'

PN

GRAPHIC SCALE: 1" = 20'

AVOLIS ENGINEERING, P.A.
P.O. BOX 15564
NEW BERN, NC 28561
PH. (252) 633-0068
kevin@avoliseng.com
LICENSE NO. C-0706
A/E PROJECT #23020

CG101	CG105	CG109
CG102	CG106	CG110
CG103	CG107	CG111
CG104	CG108	CG112

SHEET INDEX

WALKER the GROUP ARCHITECTURE incorporated
PO BOX 541, NEW BERN, NC 28563
2526366778

Digitally signed by John K. Avolis
NORTH CAROLINA PROFESSIONAL SEAL 15738 ENGINEER JOHN K. AVOLIS
JULY 28, 2025

PUBLIC SAFETY TRAINING CENTER

525 Executive Pkwy
New Bern, NC 28562

BID DOCUMENTS

SCO # 24-27879-01A

No.	Date	Revisions

Project Number

Date **7-28-2025**

Drawn **MSP**

Checked **JKA**

Scale **AS NOTED**

Drawing Title

ENLARGED SITE GRADING & EROSION CONTROL PLAN

Sheet Number **49** of **158**

Drawing Number

CG111

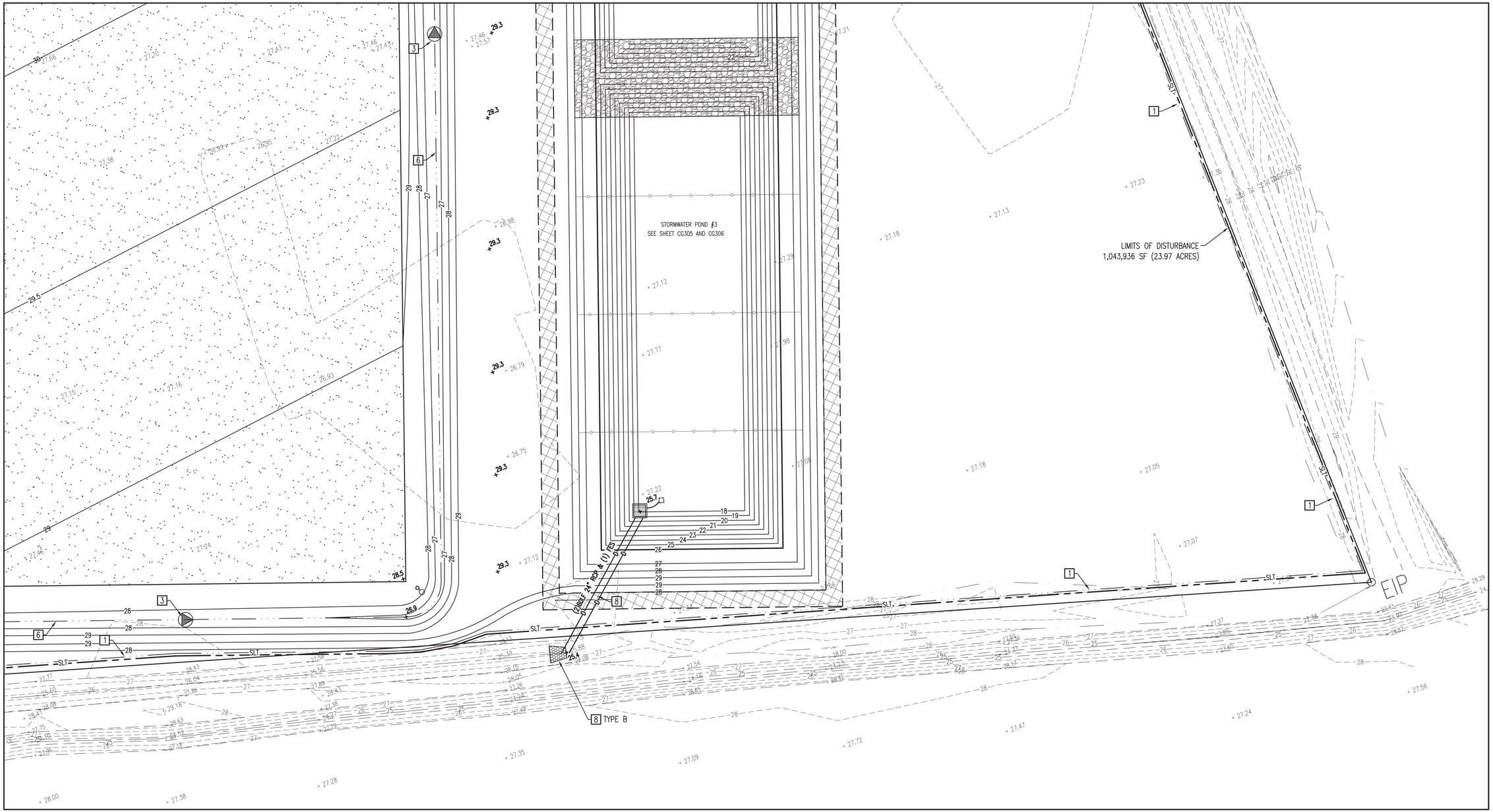

EROSION CONTROL SYMBOL LEGEND:

- —SLT— · · · —SLT— = SILT FENCE, SEE DETAIL A, SHEET CG503.
- = GRAVEL CONTROL ENTRANCE, SEE DETAIL B, SHEET CG503.
- = CHECK DAM, SEE DETAIL C, SHEET CG503.
- = INLET/OUTLET PROTECTION, SEE DETAIL D, SHEET CG503.
- = DROP INLET PROTECTION, SEE DETAIL E, SHEET CG503.

SPECIFIC WORK ITEMS (NOT ALL WORK ITEMS APPEAR ON EACH SHEET):

1. INSTALL SILT FENCE. SEE DETAIL A, SHEET CG503.
2. INSTALL GRAVEL CONTROL ENTRANCE. SEE DETAIL B, SHEET CG503.
3. INSTALL CHECK DAM. SEE DETAIL C, SHEET CG503.
4. INSTALL INLET/OUTLET PROTECTION. SEE DETAIL D, SHEET CG503.
5. INSTALL DROP INLET PROTECTION. SEE DETAIL E, SHEET CG503.
6. LINED SWALE. SEE DETAIL F, SHEET CG503.
7. DROP INLET. SEE DETAIL A, SHEET CG504.
8. STORM DRAIN PIPE, SIZE AND LENGTH AS INDICATED.

NOTE:
SEE SHEET GI001 FOR BID ALTERNATE INFORMATION. ALL CIVIL WORK DEPICTED THIS SHEET IS BASE BID WORK UNLESS SPECIFICALLY DESIGNATED AS BID ALTERNATE WORK.

A ENLARGED SITE GRADING PLAN

SCALE: 1" = 20'

TN PN

CG101	CG105	CG109
CG102	CG106	CG110
CG103	CG107	CG111
CG104	CG108	CG112

SHEET INDEX

20 0 10 20 40
GRAPHIC SCALE: 1" = 20'

AVOLIS ENGINEERING, P.A.
P.O. BOX 15564
NEW BERN, NC 28561
PH. (252) 633-0068
kevin@avoliseng.com
LICENSE NO. C-0706
A/E PROJECT #23020

WALKER the GROUP ARCHITECTURE incorporated
PO BOX 541, NEW BERN, NC 28563
2526366778

Digitally signed by John K Avolis
NORTH CAROLINA PROFESSIONAL SEAL 15738 ENGINEER JOHN K AVOLIS
JULY 28, 2025

PUBLIC SAFETY TRAINING CENTER

525 Executive Pkwy
New Bern, NC 28562

BID DOCUMENTS

SCO # 24-27879-01A

No.	Date	Revisions

Project Number

Date **7-28-2025**

Drawn **MSP**

Checked **JKA**

Scale **AS NOTED**

Drawing Title

ENLARGED SITE GRADING & EROSION CONTROL PLAN

Sheet Number **50** of **158**

Drawing Number

CG112

WORK ITEMS (SHEET CG101):

1. STORMWATER RETENTION POND – SEE CROSS SECTION, DETAIL A, SHEET CG302.
2. OUTLET STRUCTURE – SEE DETAIL B, SHEET CG302.
3. POND SKIMMER – SEE DETAIL C, SHEET CG302.
4. RIP RAP LINED BERM – SEE CROSS SECTION, DETAIL A, SHEET CG302.

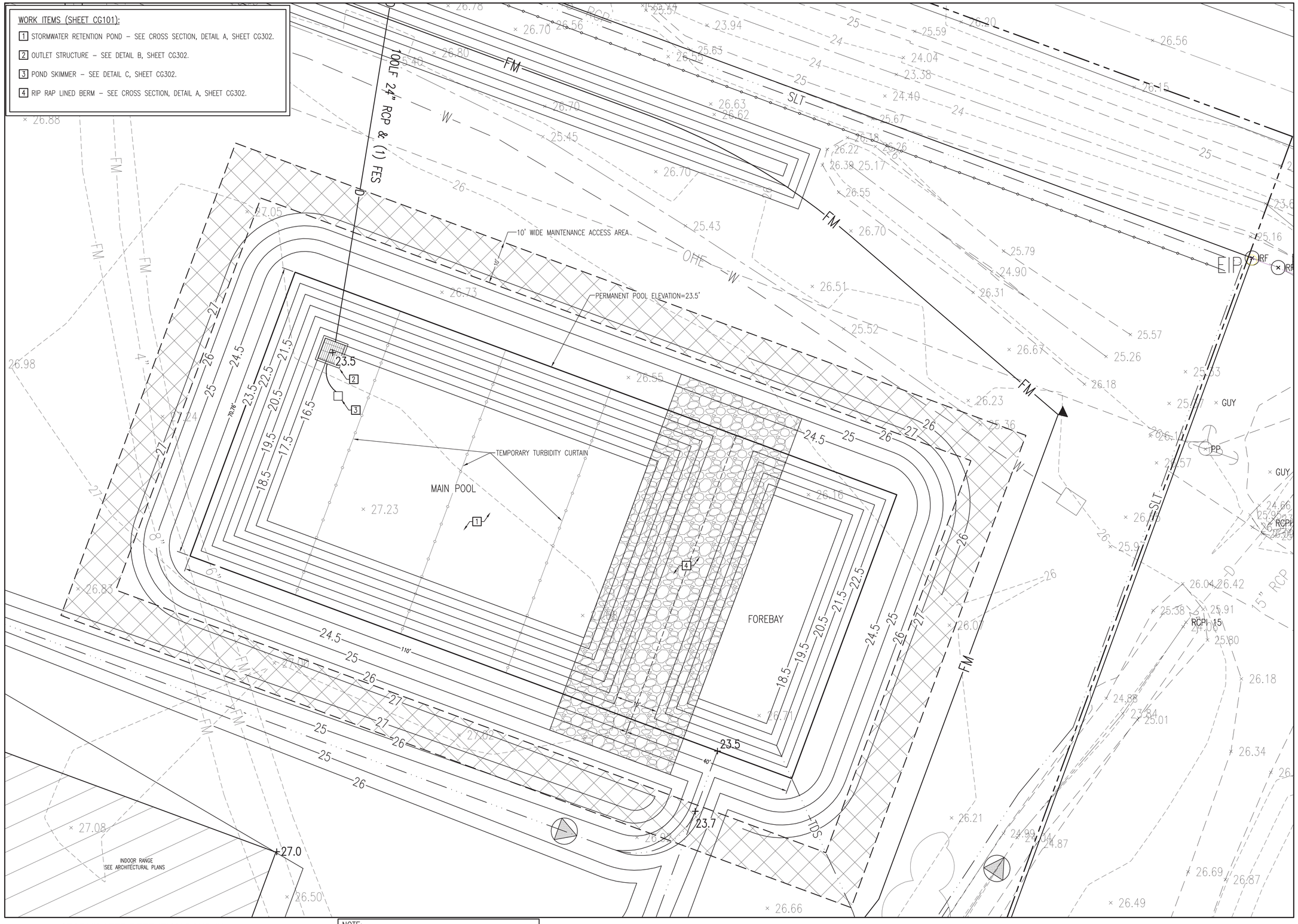

A STORMWATER RETENTION POND #1

SCALE:1"=10'

NOTE:
SEE SHEET GI001 FOR BID ALTERNATE INFORMATION. ALL CIVIL WORK DEPICTED THIS SHEET IS BASE BID WORK UNLESS SPECIFICALLY DESIGNATED AS BID ALTERNATE WORK.

GRAPHIC SCALE: 1" = 10'

AVOLIS ENGINEERING, P.A.
P.O. BOX 15564
NEW BERN, NC 28561
PH. (252) 633-0068
kevin@avoliseng.com
LICENSE NO. C-0706
A/E PROJECT #23020

WALKER the GROUP ARCHITECTURE incorporated
PO BOX 541, NEW BERN, NC 28563
2526366778

Digitally signed by John K. Avolis
NORTH CAROLINA PROFESSIONAL SEAL 15738 ENGINEER JOHN K. AVOLIS
JULY 28, 2025

PUBLIC SAFETY TRAINING CENTER

525 Executive Pkwy
New Bern, NC 28562

BID DOCUMENTS

SCO # 24-27879-01A

No.	Date	Revisions

Project Number

Date **7-28-2025**

Drawn **MSP**

Checked **JKA**

Scale **AS NOTED**

Drawing Title

STORMWATER RETENTION POND #1

Sheet Number **51** of **158**

Drawing Number

CG301

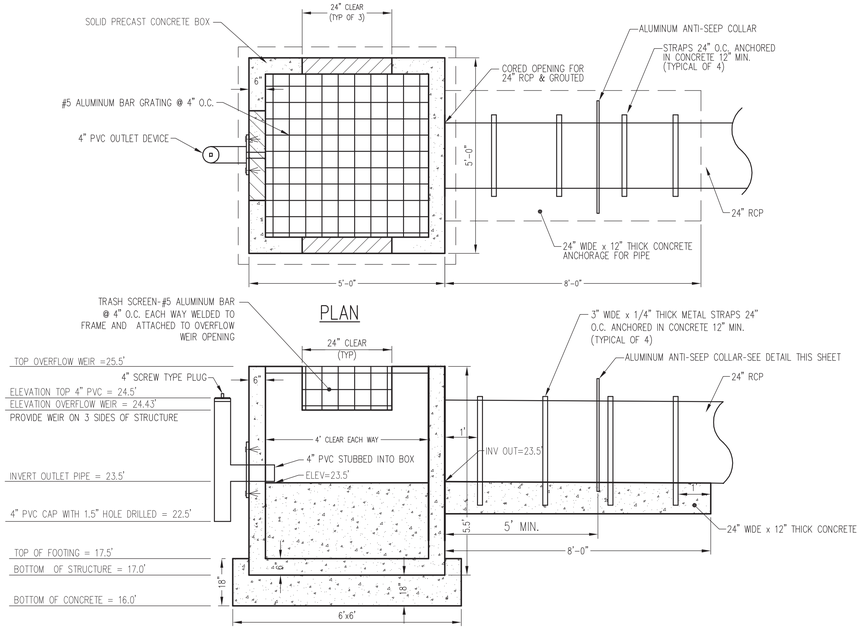

B OUTLET STRUCTURE

NOT TO SCALE

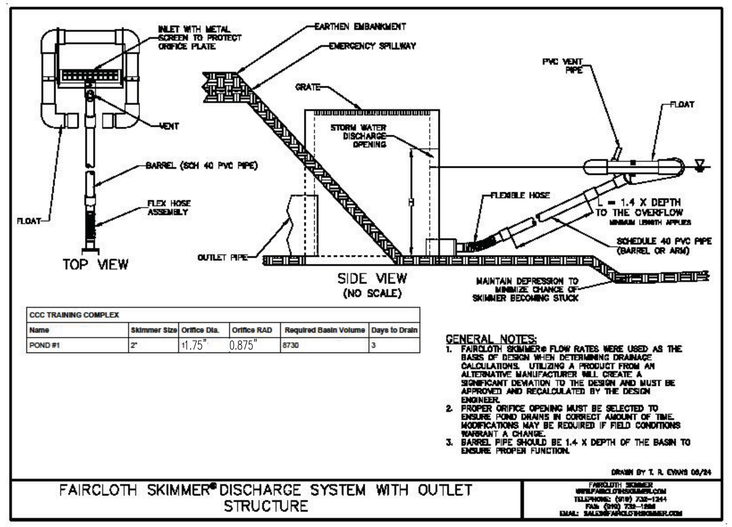

CCC TRAINING COMPLEX					
Name	Skimmer Size	Orifice Dia.	Orifice RAD	Required Basin Volume	Days to Drain
POND #1	2"	11.75"	0.875"	8730	3

GENERAL NOTES:

1. FAIRCLOTH SKIMMER® FLOW RATES WERE USED AS THE BASIS OF DESIGN WHEN DETERMINING DRAINAGE CALCULATIONS. UTILIZING A PRODUCT FROM AN ALTERNATIVE MANUFACTURER WILL CREATE A SIGNIFICANT DEVIATION TO THE DESIGN AND MUST BE APPROVED AND RECALCULATED BY THE DESIGN ENGINEER.
2. PROPER ORIFICE OPENING MUST BE SELECTED TO ENSURE POND DRAINS IN CORRECT AMOUNT OF TIME. MODIFICATIONS MAY BE REQUIRED IF FIELD CONDITIONS WARRANT A CHANGE.
3. BARREL PIPE SHOULD BE 1.4 X DEPTH OF THE BASIN TO ENSURE PROPER FUNCTION.

FAIRCLOTH SKIMMER® DISCHARGE SYSTEM WITH OUTLET STRUCTURE

SKIMMER NOTES:

1. SKIMMER SIZE SHALL BE 2 INCHES.
2. ORIFICE DIAMETER SHALL BE 1 3/4 INCHES.
3. TEMPORARILY CONNECT SKIMMER TO POND OUTLET DEVICE DURING CONSTRUCTION. REMOVE AND PLUG HOLE AT CONCLUSION OF CONSTRUCTION.
4. A FAIRCLOTH SKIMMER IS ILLUSTRATED AS A BASIS OF DESIGN. THE CONTRACTOR MAY SELECT A DIFFERENT SKIMMER DEVICE THAT PROVIDES AN EQUIVALENT LEVEL OF TREATMENT.

C POND SKIMMER

NOT TO SCALE

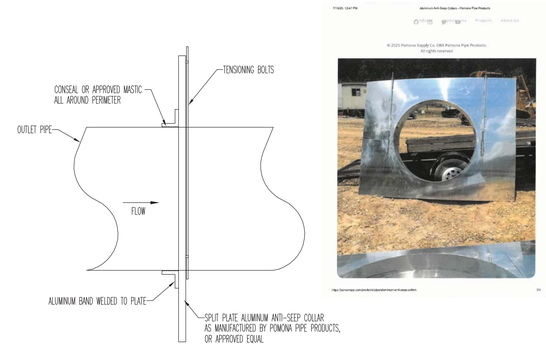

SKIMMER NOTES:

1. ANTI-SEEP COLLAR SHALL BE AS MANUFACTURED BY POMONA PIPE PRODUCTS OR APPROVED EQUAL.
2. BACKFILL EVENLY ON EACH SIDE OF THE ANTI-SEEP COLLAR AS BACKFILL PROGRESSES.

D ANTI-SEEP COLLAR

NOT TO SCALE

PERIMETER SHELF PLANTING REQUIREMENTS:

SOIL ANALYSIS AND AMENDMENTS

1. THE CONTRACTOR SHALL BE REQUIRED TO COLLECT A MINIMUM OF TWO SOIL SAMPLES AT A DEPTH OF 6 INCHES FROM SEPARATE AREAS OF THE PERIMETER SHELF AREA OF EACH POND.
2. THE SAMPLES SHALL BE SUBMITTED FOR ANALYSIS FOR RECOMMENDED SOIL AMENDMENTS FOR THE PLANTINGS SPECIFIED.
3. THE CONTRACTOR SHALL PROVIDE SOIL AMENDMENTS NECESSARY TO ADJUST SOIL pH, ORGANIC CONTENT AND SOIL TEXTURE TO MEET THE FOLLOWING:
   - pH VALUE 5.5 TO 7.0
   - ORGANIC CONTENT 5% MINIMUM BY DRY WEIGHT
   - SOIL TEXTURE LOAMY SAND WITH NO MORE THAN 10% CLAY
4. ANY SOIL AMENDMENTS SHALL BE APPLIED AND MIXED INTO THE TOP 6 INCHES OF SOIL DEPTH
5. THE SOIL SHALL BE FINE GRADED TO REMOVE ALL STONES OR ROOTS GREATER THAN 1 INCH DIAMETER

PLANT INSTALLATION AND ESTABLISHMENT

1. THE CONTRACTOR SHALL UTILIZE FRESH, NURSERY RAISED PLANTS AS SPECIFIED IN THE PLANT LIST.
2. ALL PLANTS SHALL BE INSTALLED WITHIN 48 HOURS OF RECEIPT FROM THE NURSERY AND SHALL BE MAINTAINED WITH ADEQUATE MOISTURE AND SUN TO MAINTAIN THEIR VITALITY.
3. PLANTS SHALL BE INSTALLED BY HAND AT THE SPACING SPECIFIED.
4. NEWLY INSTALLED PLANTS SHALL BE WATERED IMMEDIATELY AFTER INSTALLATION UNLESS THEY ARE INSTALLED IN A SUBMERGED SHELF AREA.

PLANTING RESTRICTIONS

1. PLANTING SHALL ONLY OCCUR DURING THE MONTHS OF APRIL THROUGH JUNE OR SEPTEMBER THROUGH NOVEMBER FOR SHALLOW LAND AREA PLANTINGS. SHALLOW WATER PLANTING SHALL ONLY OCCUR BETWEEN APRIL 1 THROUGH JULY 15.
2. FOR STORMWATER PONDS COMPLETED OUTSIDE THIS PLANTING WINDOW, TEMPORARY VEGETATION SHALL BE ESTABLISHED ON THE SHALLOW LAND PLANTING AREAS UNTIL THE PLANTING WINDOW IS REACHED.

PLANTING MAINTENANCE

1. THE CONTRACTOR SHALL INSPECT ALL PLANTINGS ON A WEEKLY BASIS FOR THE FIRST 60 DAYS AFTER PLANTING. THE CONTRACTOR SHALL WATER ALL PLANTS AS NEEDED TO ENSURE SURVIVAL.
2. AFTER 30 DAYS, ANY DISEASED DEAD OR DYING PLANTS SHALL BE REPLACED WITH THE SAME SPECIES.
3. THE CONTRACTOR SHALL WARRANT ALL PLANTINGS FOR A MINIMUM PERIOD OF 12 MONTHS AFTER INSTALLATION.

PERIMETER SHELF PLANTING LIST			PLANTING LOCATION	
SCIENTIFIC NAME	COMMON NAME	SIZE	SHALLOW WATER AREA	SHALLOW LAND AREA
IRIS VIRGINICA	BLUE FLAG IRIS	LARGE PLUG		X
PELTANDRA VIRGINICA	ARROW ARUM	LARGE PLUG		X
SAGITTARIA LANCIFOLIA	BULLTONGUE	LARGE PLUG	X	
SAGITTARIA LATIFOLIA	DUCK POTATO	LARGE PLUG	X	
SPARGANIUM AMERICANUM	BUR-REED	LARGE PLUG	X	
ZIZANIOPSIS MILIACEA	WATER MILLET	LARGE PLUG		X

PROVIDE EVEN NUMBER OF SPECIES PLANTED AT 18" O.C. IN ALL DIRECTIONS WITHIN PERIMETER SHELF. PROVIDE A MIXTURE OF EACH PLANT SPECIES SO AS TO PROVIDE APPROXIMATELY 33% COVERAGE OF THE PERIMETER SHELF IN EACH PLANTING ZONE WITH SPECIES SPECIFIED FOR EACH PLANTING ZONE.

POND #1

	STORMWATER DETENTION POND TABLE				
MAIN POND	CONTOUR	AREA(SF)	AVG. AREA(SF)	DEPTH	△ VOL(CF)
	23.5	7784	–	–	–
	22.5	6876	7330	1	7330
	21.5	6213	6544	1	6544
	20.5	5582	5897	1	5897
	19.5	4982	5282	1	5282
	18.5	4415	4699	1	4699
	17.5	3880	4148	1	4148
	16.5	3377	SEDIMENT	1	SEDIMENT
				TOTAL	33,900
FOREBAY	CONTOUR	AREA(SF)	AVG. AREA(SF)	DEPTH (FEET)	△ VOL(CF)
	23.5	2830	–	–	–
	22.5	2203	2516	1	2516
	21.5	1819	2011	1	2011
	20.5	1468	1643	1	1643
	19.5	1149	1308	1	1308
	18.5	862	SEDIMENT	1	SEDIMENT
				TOTAL	7,478
	FOREBAY VOLUME IS 22.1% OF MAIN POOL VOLUME				

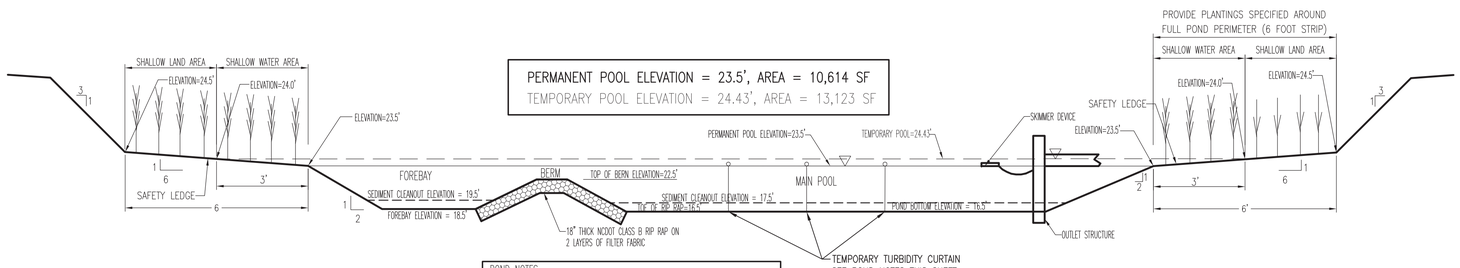

PERMANENT POOL ELEVATION = 23.5', AREA = 10,614 SF
TEMPORARY POOL ELEVATION = 24.43', AREA = 13,123 SF

POND NOTES:

1. POND SHALL BE RESTORED TO ITS DESIGN ELEVATIONS AT THE CONCLUSION OF CONSTRUCTION OPERATIONS.
2. SKIMMER DEVICE AND TEMPORARY TURBIDITY CURTAINS SHALL BE REMOVED AFTER PERMANENT VEGETATION HAS BEEN ESTABLISHED.

A STORMWATER RETENTION POND #1 - SECTION AND DETAILS

NOT TO SCALE

POND STAGE/STORAGE RELATIONSHIP				
STAGE	ELEVATION	AREA(SF)	△ VOL(CF)	TOTAL VOLUME ABOVE PERMANENT POOL
0 FT	23.5	10614	–	–
1.0 FT	24.5	13407	12011	12011
1.5 FT	25.0	14911	14159	26170
2.5 FT	26.0	16488	15700	41870
3.5 FT	27.0	18136	17312	59182

NOTE:
SEE SHEET GI001 FOR BID ALTERNATE INFORMATION. ALL CIVIL WORK DEPICTED THIS SHEET IS BASE BID WORK UNLESS SPECIFICALLY DESIGNATED AS BID ALTERNATE WORK.

LICENSE NO. C-0706
A/E PROJECT #23020
AVOLIS ENGINEERING, P.A.
P.O. BOX 15564
NEW BERN, NC 28561
PH. (252) 633-0068
kevin@avoliseng.com

WALKER the GROUP ARCHITECTURE incorporated
PO BOX 541, NEW BERN, NC 28563
2526366778

Digitally signed by John K. Avolis
NORTH CAROLINA PROFESSIONAL SEAL 15738 ENGINEER JOHN K. AVOLIS
JULY 28, 2025

PUBLIC SAFETY TRAINING CENTER

525 Executive Pkwy
New Bern, NC 28562

BID DOCUMENTS

SCO # 24-27879-01A

Revisions

No.	Date

Project Number
Date **7-28-2025**
Drawn **MSP**
Checked **JKA**
Scale **AS NOTED**
Drawing Title

STORMWATER RETENTION POND #1 - SECTION AND DETAILS

Sheet Number **52** of **158**
Drawing Number
CG302

NOTE:
SEE SHEET GI001 FOR BID ALTERNATE INFORMATION. ALL CIVIL WORK DEPICTED THIS SHEET IS BASE BID WORK UNLESS SPECIFICALLY DESIGNATED AS BID ALTERNATE WORK.

WORK ITEMS (SHEET CG101):

1. STORMWATER RETENTION POND – SEE CROSS SECTION, DETAIL A, SHEET CG304.
2. OUTLET STRUCTURE – SEE DETAIL B, SHEET CG304.
3. POND SKIMMER – SEE DETAIL C, SHEET CG304.
4. RIP RAP LINED BERM – SEE CROSS SECTION, DETAIL A, SHEET CG304.

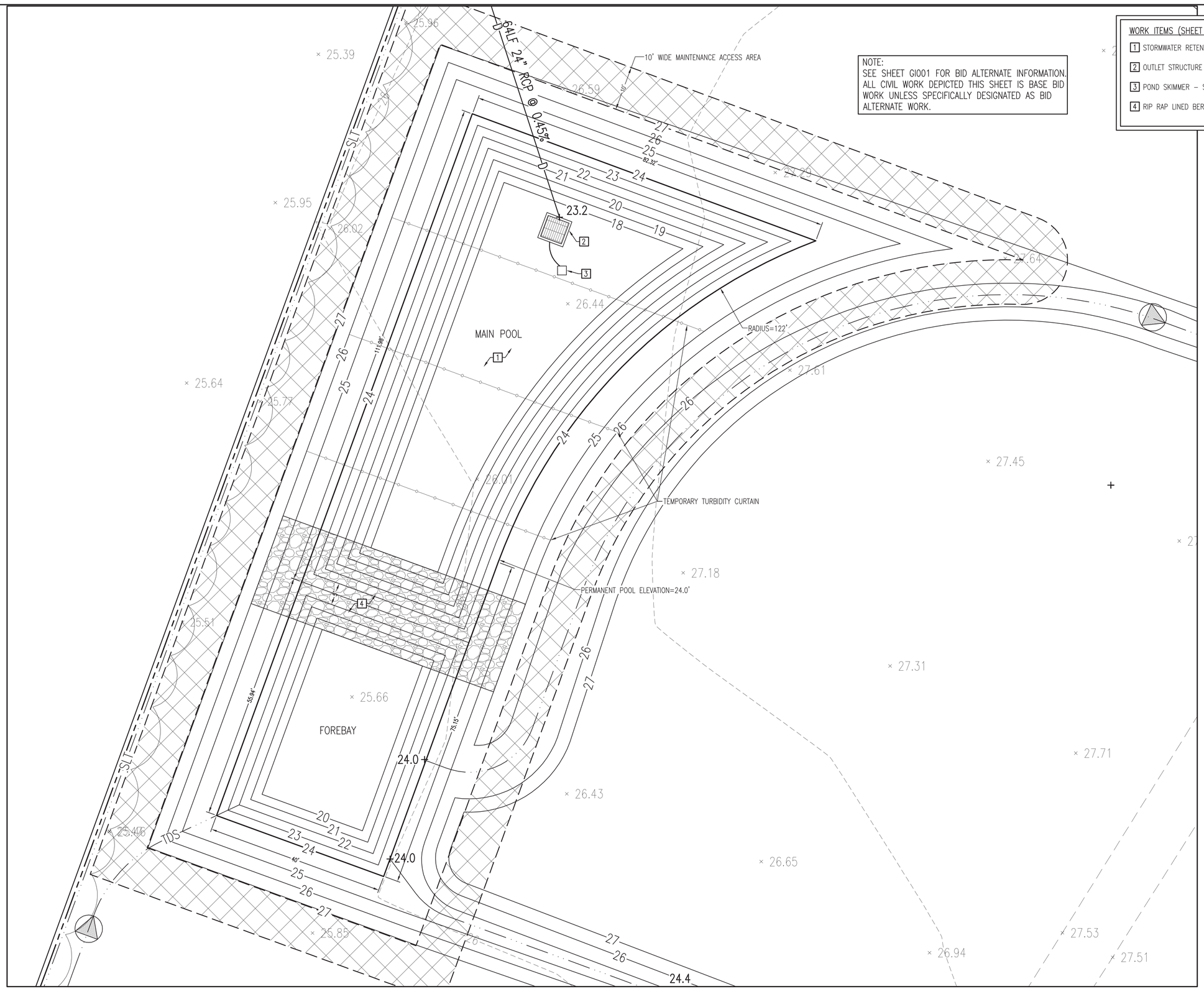

A STORMWATER RETENTION POND #2
SCALE: 1" = 10'

GRAPHIC SCALE: 1" = 10'

AVOLIS ENGINEERING, P.A.
P.O. BOX 15564
NEW BERN, NC 28561
PH. (252) 633-0068
kevin@avoliseng.com
LICENSE NO. C-0706
A/E PROJECT #23020

WALKER the GROUP ARCHITECTURE incorporated
PO BOX 541, NEW BERN, NC 28563
2526366778

Digitally signed by John K. Avolis
NORTH CAROLINA PROFESSIONAL SEAL 15738 ENGINEER JOHN K. AVOLIS
JULY 28, 2025

PUBLIC SAFETY TRAINING CENTER

525 Executive Pkwy
New Bern, NC 28562

BID DOCUMENTS
SCO # 24-27879-01A

No.	Date	Revisions

Project Number

Date **7-28-2025**

Drawn **MSP**

Checked **JKA**

Scale **AS NOTED**

Drawing Title

STORMWATER RETENTION POND #2

Sheet Number **53** of **158**

Drawing Number

CG303

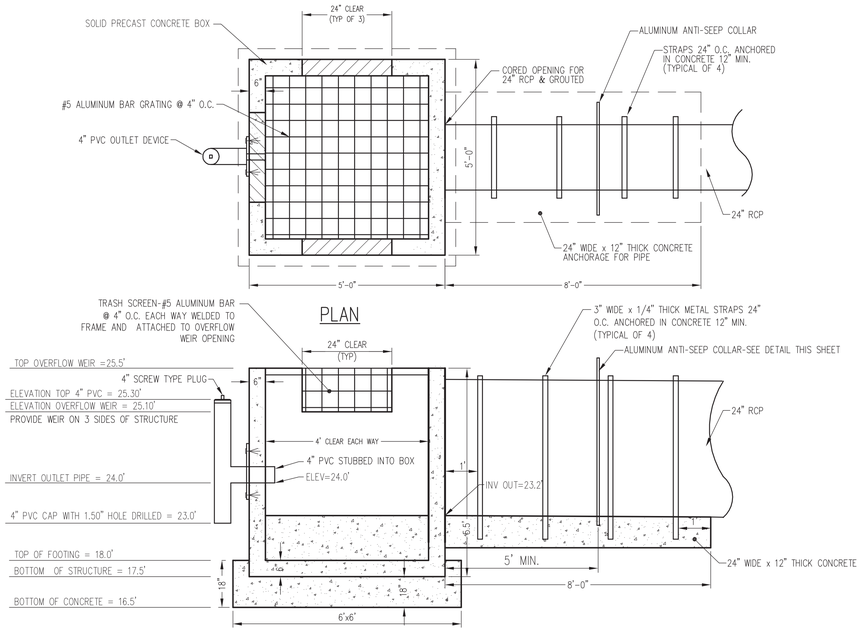

B OUTLET STRUCTURE

NOT TO SCALE

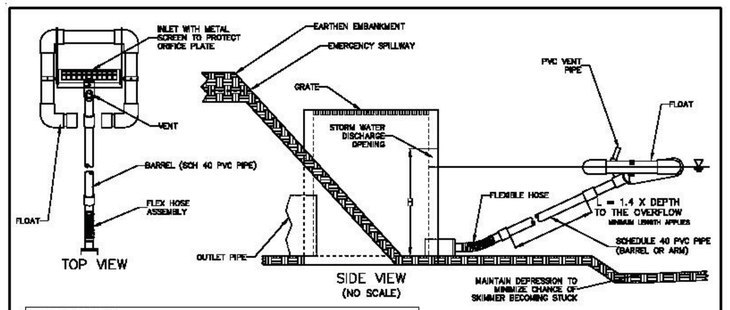

CCC TRAINING COMPLEX					
Name	Skimmer Size	Orifice Dia.	Orifice RAD	Required Basin Volume	Days to Drain
POND #2	2 1/2"	1.50"	0.75"	10451	3

GENERAL NOTES:

1. FAIRCLOTH SKIMMER® FLOW RATES WERE USED AS THE BASIS OF DESIGN WHEN DETERMINING DRAINAGE CALCULATIONS. UTILIZING A PRODUCT FROM AN ALTERNATIVE MANUFACTURER WILL CREATE A SIGNIFICANT DEVIATION TO THE DESIGN AND MUST BE APPROVED AND RECALCULATED BY THE DESIGN ENGINEER.
2. PROPER ORIFICE OPENING MUST BE SELECTED TO ENSURE POND DRAINS IN CORRECT AMOUNT OF TIME. MODIFICATIONS MAY BE REQUIRED IF FIELD CONDITIONS WARRANT A CHANGE.
3. BARREL PIPE SHOULD BE 1.4 X DEPTH OF THE BASIN TO ENSURE PROPER FUNCTION.

DRAWN BY T. R. EVANS 08/24

FAIRCLOTH SKIMMER® DISCHARGE SYSTEM WITH OUTLET STRUCTURE

FAIRCLOTH SKIMMER
WWW.FAIRCLOTHSKIMMER.COM
TELEPHONE: (910) 738-1344
FAX: (910) 738-1888
EMAIL: SALES@FAIRCLOTHSKIMMER.COM

SKIMMER NOTES:

1. SKIMMER SIZE SHALL BE 2.5 INCHES.
2. ORIFICE DIAMETER SHALL BE 1 1/2 INCHES.
3. TEMPORARILY CONNECT SKIMMER TO POND OUTLET DEVICE DURING CONSTRUCTION. REMOVE AND PLUG HOLE AT CONCLUSION OF CONSTRUCTION.
4. A FAIRCLOTH SKIMMER IS ILLUSTRATED AS A BASIS OF DESIGN. THE CONTRACTOR MAY SELECT A DIFFERENT SKIMMER DEVICE THAT PROVIDES AN EQUIVALENT LEVEL OF TREATMENT.

C POND SKIMMER

NOT TO SCALE

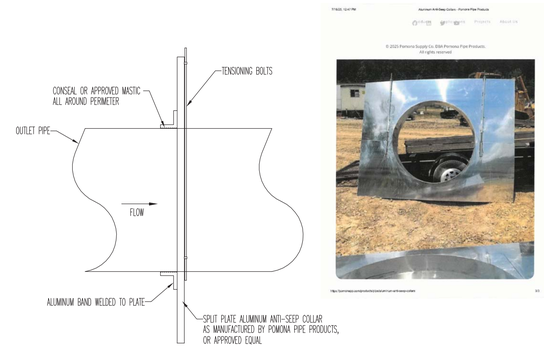

SKIMMER NOTES:

1. ANTI-SEEP COLLAR SHALL BE AS MANUFACTURED BY POMONA PIPE PRODUCTS OR APPROVED EQUAL.
2. BACKFILL EVENLY ON EACH SIDE OF THE ANTI-SEEP COLLAR AS BACKFILL PROGRESSES.

D ANTI-SEEP COLLAR

NOT TO SCALE

PERIMETER SHELF PLANTING REQUIREMENTS:

SOIL ANALYSIS AND AMENDMENTS

1. THE CONTRACTOR SHALL BE REQUIRED TO COLLECT A MINIMUM OF TWO SOIL SAMPLES AT A DEPTH OF 6 INCHES FROM SEPARATE AREAS OF THE PERIMETER SHELF AREA OF EACH POND.
2. THE SAMPLES SHALL BE SUBMITTED FOR ANALYSIS FOR RECOMMENDED SOIL AMENDMENTS FOR THE PLANTINGS SPECIFIED.
3. THE CONTRACTOR SHALL PROVIDE SOIL AMENDMENTS NECESSARY TO ADJUST SOIL pH, ORGANIC CONTENT AND SOIL TEXTURE TO MEET THE FOLLOWING:
   - pH VALUE 5.5 TO 7.0
   - ORGANIC CONTENT 5% MINIMUM BY DRY WEIGHT
   - SOIL TEXTURE LOAMY SAND WITH NO MORE THAN 10% CLAY
4. ANY SOIL AMENDMENTS SHALL BE APPLIED AND MIXED INTO THE TOP 6 INCHES OF SOIL DEPTH
5. THE SOIL SHALL BE FINE GRADED TO REMOVE ALL STONES OR ROOTS GREATER THAN 1 INCH DIAMETER

PLANT INSTALLATION AND ESTABLISHMENT

1. THE CONTRACTOR SHALL UTILIZE FRESH, NURSERY RAISED PLANTS AS SPECIFIED IN THE PLANT LIST.
2. ALL PLANTS SHALL BE INSTALLED WITHIN 48 HOURS OF RECEIPT FROM THE NURSERY AND SHALL BE MAINTAINED WITH ADEQUATE MOISTURE AND SUN TO MAINTAIN THEIR VITALITY.
3. PLANTS SHALL BE INSTALLED BY HAND AT THE SPACING SPECIFIED.
4. NEWLY INSTALLED PLANTS SHALL BE WATERED IMMEDIATELY AFTER INSTALLATION UNLESS THEY ARE INSTALLED IN A SUBMERGED SHELF AREA.

PLANTING RESTRICTIONS

1. PLANTING SHALL ONLY OCCUR DURING THE MONTHS OF APRIL THROUGH JUNE OR SEPTEMBER THROUGH NOVEMBER FOR SHALLOW LAND AREA PLANTINGS. SHALLOW WATER PLANTING SHALL ONLY OCCUR BETWEEN APRIL 1 THROUGH JULY 15.
2. FOR STORMWATER PONDS COMPLETED OUTSIDE THIS PLANTING WINDOW, TEMPORARY VEGETATION SHALL BE ESTABLISHED ON THE SHALLOW LAND PLANTING AREAS UNTIL THE PLANTING WINDOW IS REACHED.

PLANTING MAINTENANCE

1. THE CONTRACTOR SHALL INSPECT ALL PLANTINGS ON A WEEKLY BASIS FOR THE FIRST 60 DAYS AFTER PLANTING. THE CONTRACTOR SHALL WATER ALL PLANTS AS NEEDED TO ENSURE SURVIVAL.
2. AFTER 30 DAYS, ANY DISEASED DEAD OR DYING PLANTS SHALL BE REPLACED WITH THE SAME SPECIES.
3. THE CONTRACTOR SHALL WARRANT ALL PLANTINGS FOR A MINIMUM PERIOD OF 12 MONTHS AFTER INSTALLATION.

PERIMETER SHELF PLANTING LIST			PLANTING LOCATION	
SCIENTIFIC NAME	COMMON NAME	SIZE	SHALLOW WATER AREA	SHALLOW LAND AREA
IRIS VIRGINICA	BLUE FLAG IRIS	LARGE PLUG		X
PELTANDRA VIRGINICA	ARROW ARUM	LARGE PLUG		X
SAGITTARIA LANCIFOLIA	BULLTONGUE	LARGE PLUG	X	
SAGITTARIA LATIFOLIA	DUCK POTATO	LARGE PLUG	X	
SPARGANIUM AMERICANUM	BUR-REED	LARGE PLUG	X	
ZIZANIOPSIS MILIACEA	WATER MILLET	LARGE PLUG		X

PROVIDE EVEN NUMBER OF SPECIES PLANTED AT 18" O.C. IN ALL DIRECTIONS WITHIN PERIMETER SHELF. PROVIDE A MIXTURE OF EACH PLANT SPECIES SO AS TO PROVIDE APPROXIMATELY 33% COVERAGE OF THE PERIMETER SHELF IN EACH PLANTING ZONE WITH SPECIES SPECIFIED FOR EACH PLANTING ZONE.

POND #2

	STORMWATER DETENTION POND TABLE				
MAIN POND	CONTOUR	AREA(SF)	AVG. AREA(SF)	DEPTH	△ VOL(CF)
	24	5675	–	–	–
	23	4963	5319	1	5319
	22	4309	4636	1	4636
	21	3697	4003	1	4003
	20	3122	3410	1	3410
	19	2587	2855	1	2855
	18	2090	SEDIMENT	1	SEDIMENT
				TOTAL	20,223
FOREBAY	CONTOUR	AREA(SF)	AVG. AREA(SF)	DEPTH (FEET)	△ VOL(CF)
	24	2238	–	–	–
	23	1851	2045	1	2045
	22	1518	1685	1	1685
	21	1216	1367	1	1367
	20	947	SEDIMENT	1	SEDIMENT
				TOTAL	5097
	FOREBAY VOLUME IS 25.2% OF MAIN POOL VOLUME				

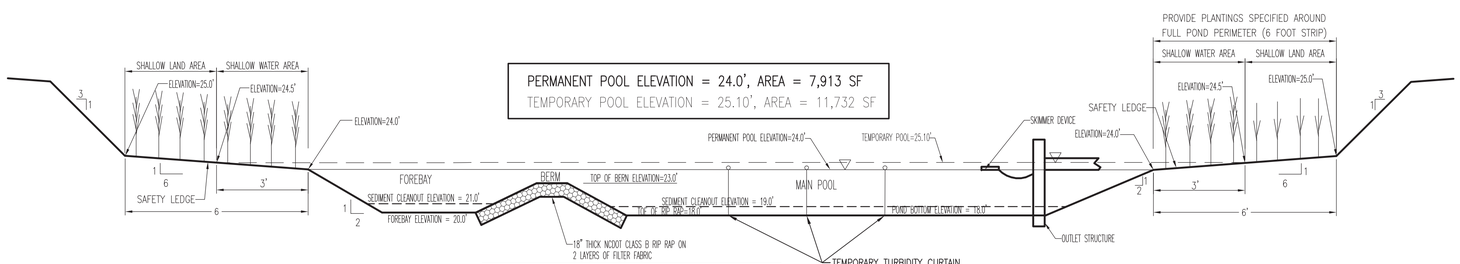

PERMANENT POOL ELEVATION = 24.0', AREA = 7,913 SF

TEMPORARY POOL ELEVATION = 25.10', AREA = 11,732 SF

POND NOTES:

1. POND SHALL BE RESTORED TO ITS DESIGN ELEVATIONS AT THE CONCLUSION OF CONSTRUCTION OPERATIONS.
2. SKIMMER DEVICE AND TEMPORARY TURBIDITY CURTAINS SHALL BE REMOVED AFTER PERMANENT VEGETATION HAS BEEN ESTABLISHED.

A STORMWATER RETENTION POND #2 - SECTION AND DETAILS

NOT TO SCALE

POND STAGE/STORAGE RELATIONSHIP				
STAGE	ELEVATION	AREA(SF)	△ VOL(CF)	TOTAL VOLUME ABOVE PERMANENT POOL
0 FT	24	7913	–	–
1.0 FT	25	10930	9422	9422
2.0 FT	26	12597	11764	21186
3.0 FT	27	18552	15775	36961

NOTE:
SEE SHEET GI001 FOR BID ALTERNATE INFORMATION. ALL CIVIL WORK DEPICTED THIS SHEET IS BASE BID WORK UNLESS SPECIFICALLY DESIGNATED AS BID ALTERNATE WORK.

AVOLIS ENGINEERING, P.A.
P.O. BOX 15564
NEW BERN, NC 28561
PH. (252) 633-0068
kevin@avoliseng.com
LICENSE NO. C-0706
A/E PROJECT #23020

WALKER the GROUP ARCHITECTURE incorporated
PO BOX 541, NEW BERN, NC 28563
2526366778

Digitally signed by Kevin K. Avolis
NORTH CAROLINA PROFESSIONAL SEAL 15738 ENGINEER KEVIN K. AVOLIS
JULY 28, 2025

PUBLIC SAFETY TRAINING CENTER

525 Executive Pkwy
New Bern, NC 28562

BID DOCUMENTS

SCO # 24-27879-01A

Revisions

No. Date

Project Number

Date **7-28-2025**

Drawn **MSP**

Checked **JKA**

Scale **AS NOTED**

Drawing Title

STORMWATER RETENTION POND #2 - SECTION AND DETAILS

Sheet Number **54** of **158**

Drawing Number

CG304

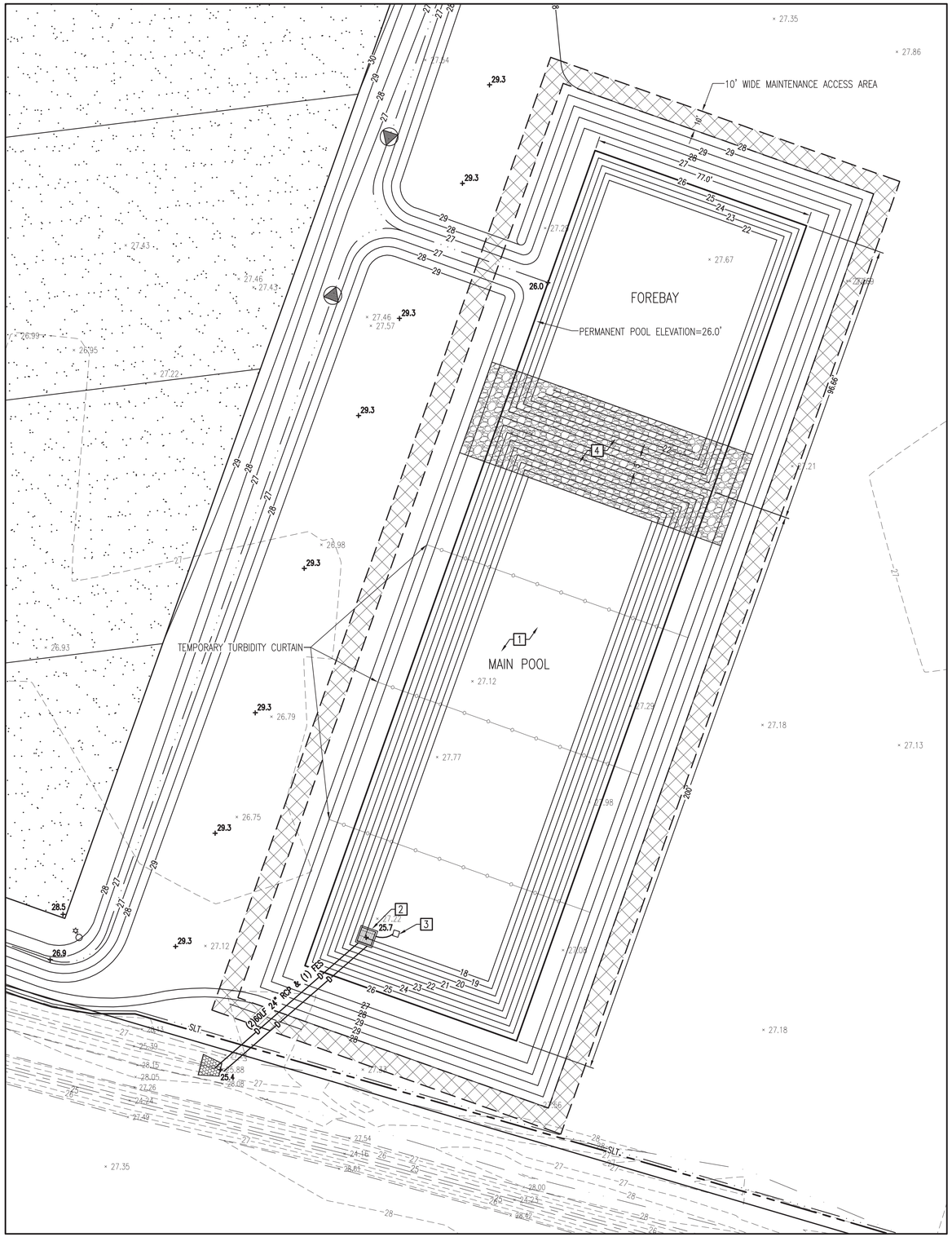

A STORMWATER RETENTION POND #3

SCALE:1"=20'

WORK ITEMS (SHEET CG101):

1. STORMWATER RETENTION POND – SEE CROSS SECTION, DETAIL A, SHEET CG306.
2. OUTLET STRUCTURE – SEE DETAIL B, SHEET CG306.
3. POND SKIMMER – SEE DETAIL C, SHEET CG306.
4. RIP RAP LINED BERM – SEE CROSS SECTION, DETAIL A, SHEET CG306.

NOTE:
SEE SHEET GI001 FOR BID ALTERNATE INFORMATION. ALL CIVIL WORK DEPICTED THIS SHEET IS BASE BID WORK UNLESS SPECIFICALLY DESIGNATED AS BID ALTERNATE WORK.

20 0 10 20 40
GRAPHIC SCALE: 1" = 20'

AVOLIS ENGINEERING, P.A.
P.O. BOX 15564
NEW BERN, NC 28561
PH. (252) 633-0068
kevin@avoliseng.com
LICENSE NO. C-0706
A/E PROJECT #23020

WALKER the GROUP ARCHITECTURE incorporated
PO BOX 541, NEW BERN, NC 28563
2526366778

Digitally signed by John K. Avolis
NORTH CAROLINA PROFESSIONAL SEAL 15738 ENGINEER JOHN K. AVOLIS
JULY 28, 2025

PUBLIC SAFETY TRAINING CENTER

525 Executive Pkwy
New Bern, NC 28562

BID DOCUMENTS

SCO # 24-27879-01A

No.	Date	Revisions

Project Number

Date **7-28-2025**

Drawn **MSP**

Checked **JKA**

Scale **AS NOTED**

Drawing Title

STORMWATER RETENTION POND #3

Sheet Number **55** of **158**

Drawing Number

CG305

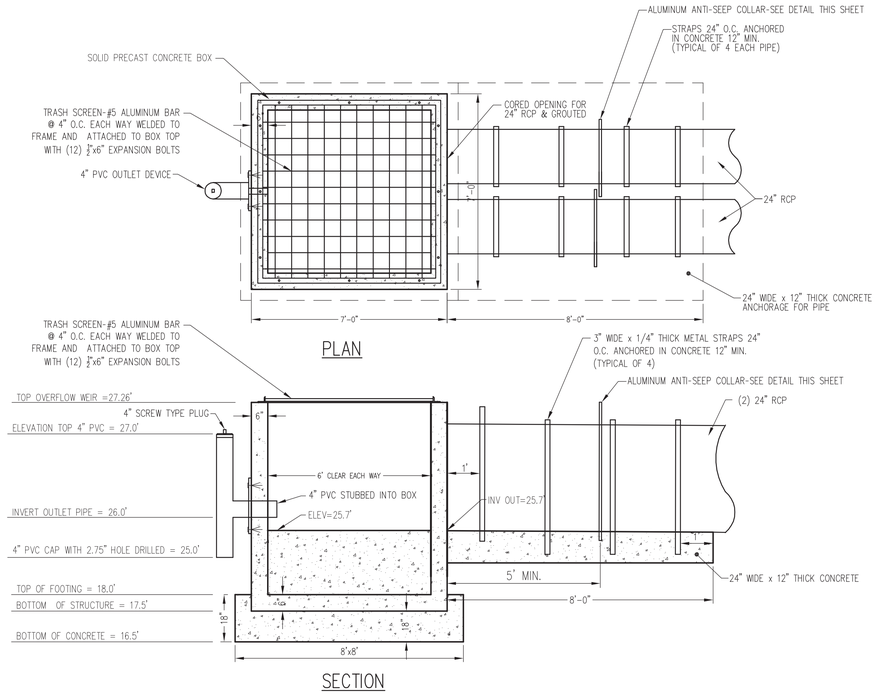

B OUTLET STRUCTURE

NOT TO SCALE

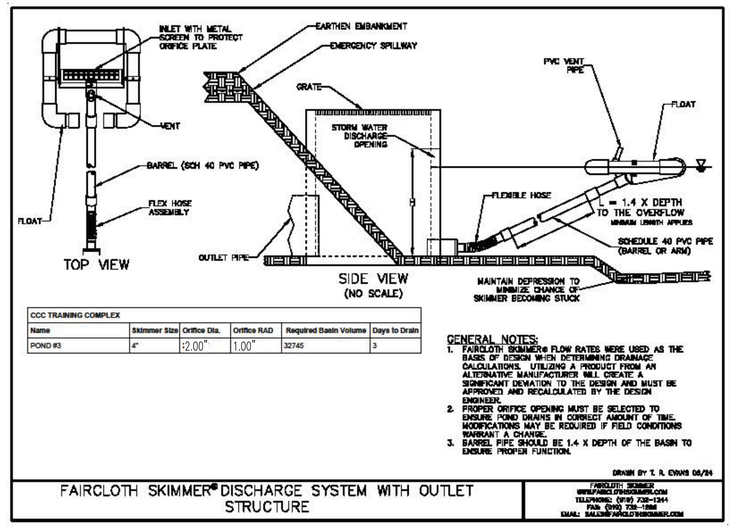

CCC TRAINING COMPLEX					
Name	Skimmer Size	Orifice Dia.	Orifice RAD	Required Basin Volume	Days to Drain
POND #3	4"	2.00"	1.00"	32745	3

GENERAL NOTES:
1. FAIRCLOTH SKIMMER® FLOW RATES WERE USED AS THE BASIS OF DESIGN WHEN DETERMINING DRAINAGE CALCULATIONS. UTILIZING A PRODUCT FROM AN ALTERNATIVE MANUFACTURER WILL CREATE A SIGNIFICANT DEVIATION TO THE DESIGN AND MUST BE APPROVED AND RECALCULATED BY THE DESIGN ENGINEER.
2. PROPER ORIFICE OPENING MUST BE SELECTED TO ENSURE POND DRAINS IN CORRECT AMOUNT OF TIME. MODIFICATIONS MAY BE REQUIRED IF FIELD CONDITIONS WARRANT A CHANGE.
3. BARREL PIPE SHOULD BE 1.4 X DEPTH OF THE BASIN TO ENSURE PROPER FUNCTION.

DRAWN BY T. R. EVANS 08/24

FAIRCLOTH SKIMMER® DISCHARGE SYSTEM WITH OUTLET STRUCTURE

FAIRCLOTH SKIMMER
WWW.FAIRCLOTHSKIMMER.COM
TELEPHONE: (910) 738-1244
FAX: (910) 738-1288
EMAIL: SALES@FAIRCLOTHSKIMMER.COM

SKIMMER NOTES:
1. SKIMMER SIZE SHALL BE 4.0 INCHES.
2. ORIFICE DIAMETER SHALL BE 2 INCHES.
3. TEMPORARILY CONNECT SKIMMER TO POND OUTLET DEVICE DURING CONSTRUCTION. REMOVE AND PLUG HOLE AT CONCLUSION OF CONSTRUCTION.
4. A FAIRCLOTH SKIMMER IS ILLUSTRATED AS A BASIS OF DESIGN. THE CONTRACTOR MAY SELECT A DIFFERENT SKIMMER DEVICE THAT PROVIDES AN EQUIVALENT LEVEL OF TREATMENT.

C POND SKIMMER

NOT TO SCALE

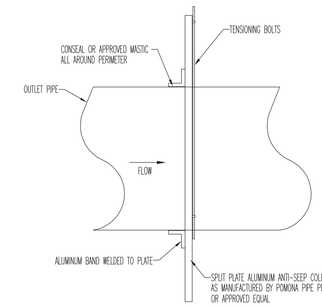

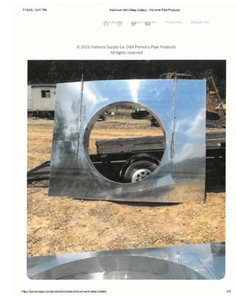

SKIMMER NOTES:
1. ANTI-SEEP COLLAR SHALL BE AS MANUFACTURED BY POMONA PIPE PRODUCTS OR APPROVED EQUAL.
2. BACKFILL EVENLY ON EACH SIDE OF THE ANTI-SEEP COLLAR AS BACKFILL PROGRESSES.

D ANTI-SEEP COLLAR

NOT TO SCALE

PERIMETER SHELF PLANTING REQUIREMENTS:

SOIL ANALYSIS AND AMENDMENTS

1. THE CONTRACTOR SHALL BE REQUIRED TO COLLECT A MINIMUM OF TWO SOIL SAMPLES AT A DEPTH OF 6 INCHES FROM SEPARATE AREAS OF THE PERIMETER SHELF AREA OF EACH POND.
2. THE SAMPLES SHALL BE SUBMITTED FOR ANALYSIS FOR RECOMMENDED SOIL AMENDMENTS FOR THE PLANTINGS SPECIFIED.
3. THE CONTRACTOR SHALL PROVIDE SOIL AMENDMENTS NECESSARY TO ADJUST SOIL pH, ORGANIC CONTENT AND SOIL TEXTURE TO MEET THE FOLLOWING:
   - pH VALUE 5.5 TO 7.0
   - ORGANIC CONTENT 5% MINIMUM BY DRY WEIGHT
   - SOIL TEXTURE LOAMY SAND WITH NO MORE THAN 10% CLAY
4. ANY SOIL AMENDMENTS SHALL BE APPLIED AND MIXED INTO THE TOP 6 INCHES OF SOIL DEPTH
5. THE SOIL SHALL BE FINE GRADED TO REMOVE ALL STONES OR ROOTS GREATER THAN 1 INCH DIAMETER

PLANT INSTALLATION AND ESTABLISHMENT

1. THE CONTRACTOR SHALL UTILIZE FRESH, NURSERY RAISED PLANTS AS SPECIFIED IN THE PLANT LIST.
2. ALL PLANTS SHALL BE INSTALLED WITHIN 48 HOURS OF RECEIPT FROM THE NURSERY AND SHALL BE MAINTAINED WITH ADEQUATE MOISTURE AND SUN TO MAINTAIN THEIR VITALITY.
3. PLANTS SHALL BE INSTALLED BY HAND AT THE SPACING SPECIFIED.
4. NEWLY INSTALLED PLANTS SHALL BE WATERED IMMEDIATELY AFTER INSTALLATION UNLESS THEY ARE INSTALLED IN A SUBMERGED SHELF AREA.

PLANTING RESTRICTIONS

1. PLANTING SHALL ONLY OCCUR DURING THE MONTHS OF APRIL THROUGH JUNE OR SEPTEMBER THROUGH NOVEMBER FOR SHALLOW LAND AREA PLANTINGS. SHALLOW WATER PLANTING SHALL ONLY OCCUR BETWEEN APRIL 1 THROUGH JULY 15.
2. FOR STORMWATER PONDS COMPLETED OUTSIDE THIS PLANTING WINDOW, TEMPORARY VEGETATION SHALL BE ESTABLISHED ON THE SHALLOW LAND PLANTING AREAS UNTIL THE PLANTING WINDOW IS REACHED.

PLANTING MAINTENANCE

1. THE CONTRACTOR SHALL INSPECT ALL PLANTINGS ON A WEEKLY BASIS FOR THE FIRST 60 DAYS AFTER PLANTING. THE CONTRACTOR SHALL WATER ALL PLANTS AS NEEDED TO ENSURE SURVIVAL.
2. AFTER 30 DAYS, ANY DISEASED DEAD OR DYING PLANTS SHALL BE REPLACED WITH THE SAME SPECIES.
3. THE CONTRACTOR SHALL WARRANT ALL PLANTINGS FOR A MINIMUM PERIOD OF 12 MONTHS AFTER INSTALLATION.

PERIMETER SHELF PLANTING LIST			PLANTING LOCATION	
SCIENTIFIC NAME	COMMON NAME	SIZE	SHALLOW WATER AREA	SHALLOW LAND AREA
IRIS VIRGINICA	BLUE FLAG IRIS	LARGE PLUG		X
PELTANDRA VIRGINICA	ARROW ARUM	LARGE PLUG		X
SAGITTARIA LANCIFOLIA	BULLTONGUE	LARGE PLUG	X	
SAGITTARIA LATIFOLIA	DUCK POTATO	LARGE PLUG	X	
SPARGANIUM AMERICANUM	BUR-REED	LARGE PLUG	X	
ZIZANIOPSIS MILIACEA	WATER MILLET	LARGE PLUG		X

PROVIDE EVEN NUMBER OF SPECIES PLANTED AT 18" O.C. IN ALL DIRECTIONS WITHIN PERIMETER SHELF. PROVIDE A MIXTURE OF EACH PLANT SPECIES SO AS TO PROVIDE APPROXIMATELY 33% COVERAGE OF THE PERIMETER SHELF IN EACH PLANTING ZONE WITH SPECIES SPECIFIED FOR EACH PLANTING ZONE.

POND #3

STORMWATER DETENTION POND TABLE					
MAIN POND	CONTOUR	AREA(SF)	AVG. AREA(SF)	DEPTH	△ VOL(CF)
	26	15400	–	–	–
	25	14271	14836	1	14836
	24	13214	13742	1	13742
	23	12188	12701	1	12701
	22	11194	11691	1	11691
	21	10232	10713	1	10713
	20	9301	9766	1	9766
	19	8404	8853	1	8853
	18	7538	SEDIMENT	1	SEDIMENT
				TOTAL	82,302
FOREBAY	CONTOUR	AREA(SF)	AVG. AREA(SF)	DEPTH (FEET)	△ VOL(CF)
	26	7443	–	–	–
	25	6728	7085	1	7085
	24	6084	6406	1	6406
	23	5470	5777	1	5777
	22	4890	SEDIMENT	1	SEDIMENT
				TOTAL	19,268
	FOREBAY VOLUME IS 23.4% OF MAIN POOL VOLUME				

POND STAGE/STORAGE RELATIONSHIP				
STAGE	ELEVATION	AREA(SF)	△ VOL(CF)	TOTAL VOLUME ABOVE PERMANENT POOL
0 FT	26	22843	–	–
1.0 FT	27	30121	25157	25157
2.0 FT	28	38495	28682	53839
3.0 FT	29	61477	31140	84979

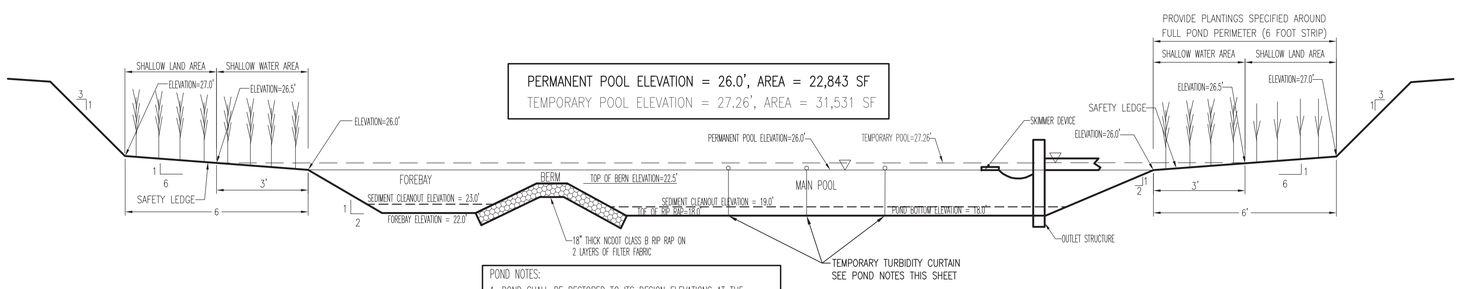

POND NOTES:
1. POND SHALL BE RESTORED TO ITS DESIGN ELEVATIONS AT THE CONCLUSION OF CONSTRUCTION OPERATIONS.
2. SKIMMER DEVICE AND TEMPORARY TURBIDITY CURTAINS SHALL BE REMOVED AFTER PERMANENT VEGETATION HAS BEEN ESTABLISHED.

A STORMWATER RETENTION POND #3 - SECTION AND DETAILS

NOT TO SCALE

NOTE:
SEE SHEET GI001 FOR BID ALTERNATE INFORMATION. ALL CIVIL WORK DEPICTED THIS SHEET IS BASE BID WORK UNLESS SPECIFICALLY DESIGNATED AS BID ALTERNATE WORK.

AVOLIS ENGINEERING, P.A.
P.O. BOX 15564
NEW BERN, NC 28561
PH. (252) 633-0068
kevin@avoliseng.com
LICENSE NO. C-0706
A/E PROJECT #23020

WALKER the GROUP ARCHITECTURE incorporated
PO BOX 541, NEW BERN, NC 28563
2526366778

Digitally signed by John K. Avolis
NORTH CAROLINA PROFESSIONAL SEAL 15738 ENGINEER JOHN K. AVOLIS
JULY 28, 2025

PUBLIC SAFETY TRAINING CENTER

525 Executive Pkwy
New Bern, NC 28562

BID DOCUMENTS

SCO # 24-27879-01A

Revisions

No.	Date

Project Number

Date **7-28-2025**

Drawn **MSP**

Checked **JKA**

Scale **AS NOTED**

Drawing Title

STORMWATER RETENTION POND #3 - SECTION AND DETAILS

Sheet Number **56** of **158**

Drawing Number

CG306

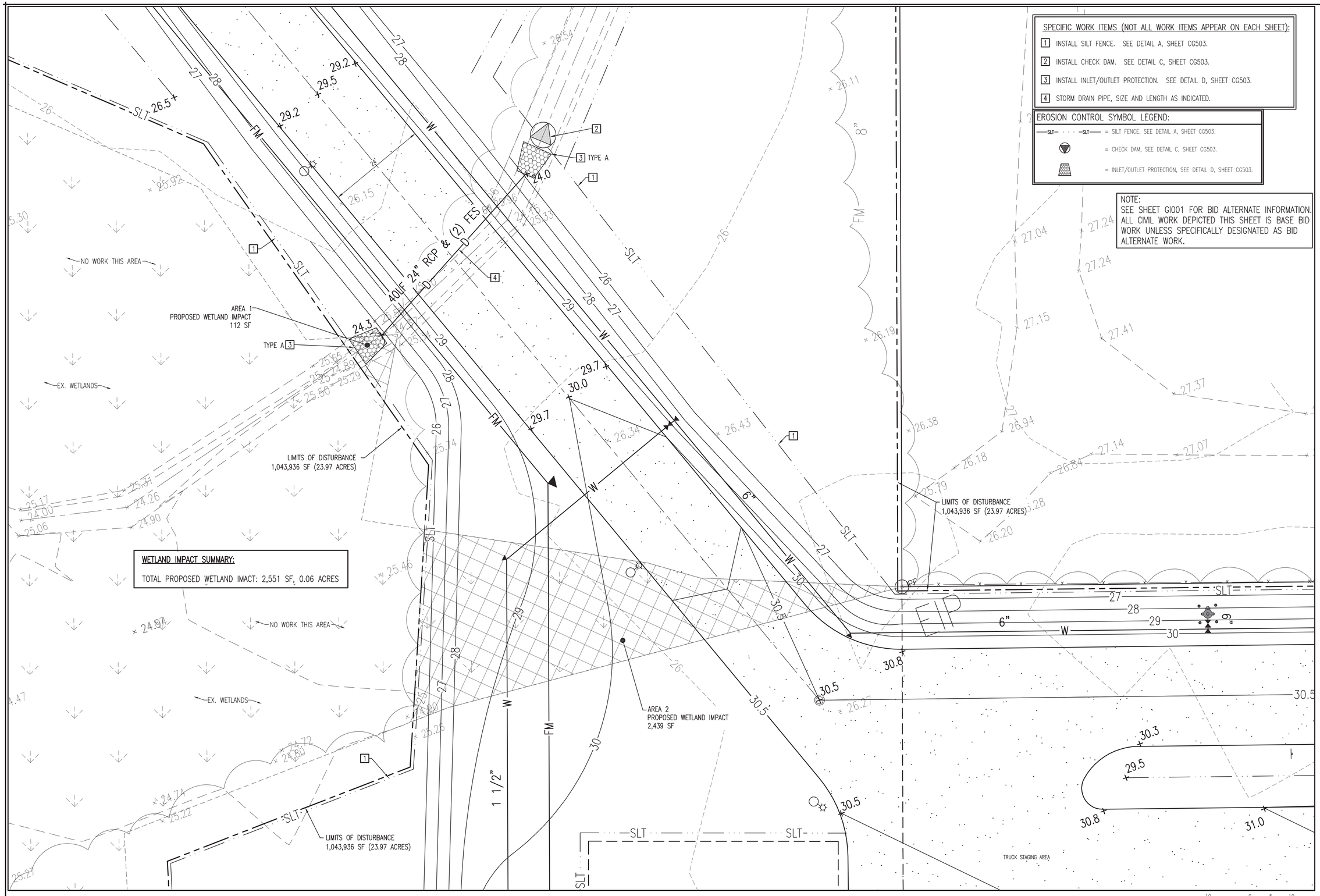

WETLAND IMPACT SUMMARY:

TOTAL PROPOSED WETLAND IMACT: 2,551 SF, 0.06 ACRES

SPECIFIC WORK ITEMS (NOT ALL WORK ITEMS APPEAR ON EACH SHEET):

1. INSTALL SILT FENCE. SEE DETAIL A, SHEET CG503.
2. INSTALL CHECK DAM. SEE DETAIL C, SHEET CG503.
3. INSTALL INLET/OUTLET PROTECTION. SEE DETAIL D, SHEET CG503.
4. STORM DRAIN PIPE, SIZE AND LENGTH AS INDICATED.

EROSION CONTROL SYMBOL LEGEND:

—SLT— · · · —SLT— = SILT FENCE, SEE DETAIL A, SHEET CG503.

= CHECK DAM, SEE DETAIL C, SHEET CG503.

= INLET/OUTLET PROTECTION, SEE DETAIL D, SHEET CG503.

NOTE:
SEE SHEET GI001 FOR BID ALTERNATE INFORMATION. ALL CIVIL WORK DEPICTED THIS SHEET IS BASE BID WORK UNLESS SPECIFICALLY DESIGNATED AS BID ALTERNATE WORK.

A ENLARGED SITE GRADING PLAN-WETLAND IMPACTS

SCALE: 1" = 10'

TN PN

10 0 5 10 20
GRAPHIC SCALE: 1" = 10'

AVOLIS ENGINEERING, P.A.
P.O. BOX 15564
NEW BERN, NC 28561
PH. (252) 633-0068
kevin@avoliseng.com
LICENSE NO. C-0706
A/E PROJECT #23020

WALKER the GROUP ARCHITECTURE incorporated
PO BOX 541, NEW BERN, NC 28563
2526366778

Digitally signed by John K. Avolis
NORTH CAROLINA PROFESSIONAL SEAL 15738 ENGINEER JOHN K. AVOLIS
JULY 28, 2025

PUBLIC SAFETY TRAINING CENTER

525 Executive Pkwy
New Bern, NC 28562

BID DOCUMENTS

SCO # 24-27879-01A

No.	Date	Revisions

Project Number

Date **7-28-2025**

Drawn **MSP**

Checked **JKA**

Scale **AS NOTED**

Drawing Title

ENLARGED SITE GRADING PLAN WETLAND IMPACTS

Sheet Number **57** of **158**

Drawing Number

CG307

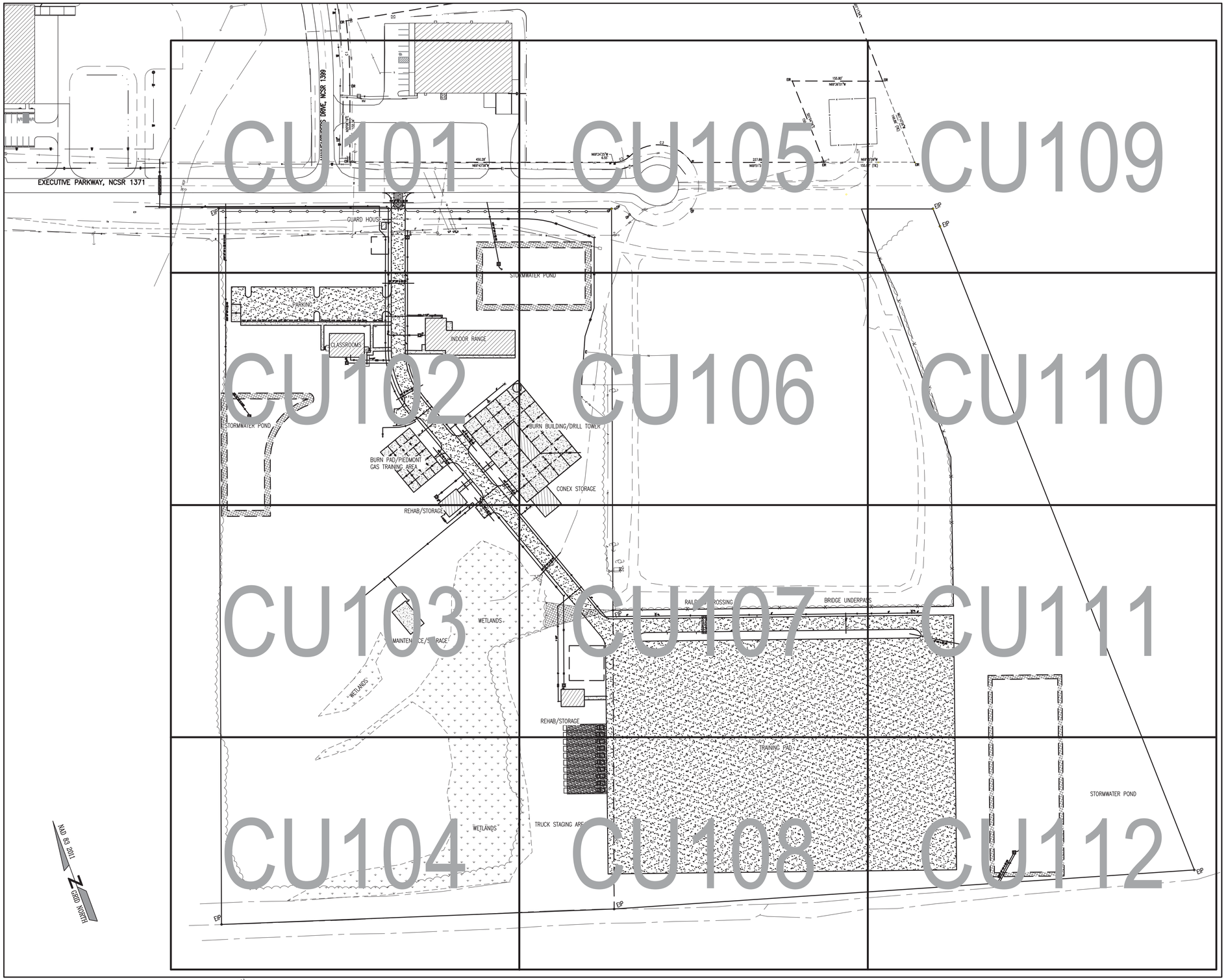

A OVERALL SITE UTILITY PLAN
SCALE: 1" = 80'

TN PN

80 0 40 80 160
GRAPHIC SCALE: 1" = 80'

PRELIMINARY–NOT FOR CONSTRUCTION

AVOLIS ENGINEERING, P.A.
P.O. BOX 15564
NEW BERN, NC 28561
PH. (252) 633-0068
kevin@avoliseng.com
LICENSE NO. C-0706
A/E PROJECT #23020

WALKER the GROUP ARCHITECTURE incorporated
PO BOX 541, NEW BERN, NC 28563
2526366778

Digitally signed by John K. Avolis
NORTH CAROLINA PROFESSIONAL SEAL 15738 ENGINEER JOHN K. AVOLIS
JULY 28, 2025

PUBLIC SAFETY TRAINING CENTER

525 Executive Pkwy
New Bern, NC 28562

BID DOCUMENTS
SCO # 24-27879-01A

No.	Date	Revisions

Project Number
Date **7-28-2025**
Drawn **MSP**
Checked **JKA**
Scale **AS NOTED**
Drawing Title
OVERALL SITE UTILITY PLAN

Sheet Number
58 of **158**
Drawing Number
CU100

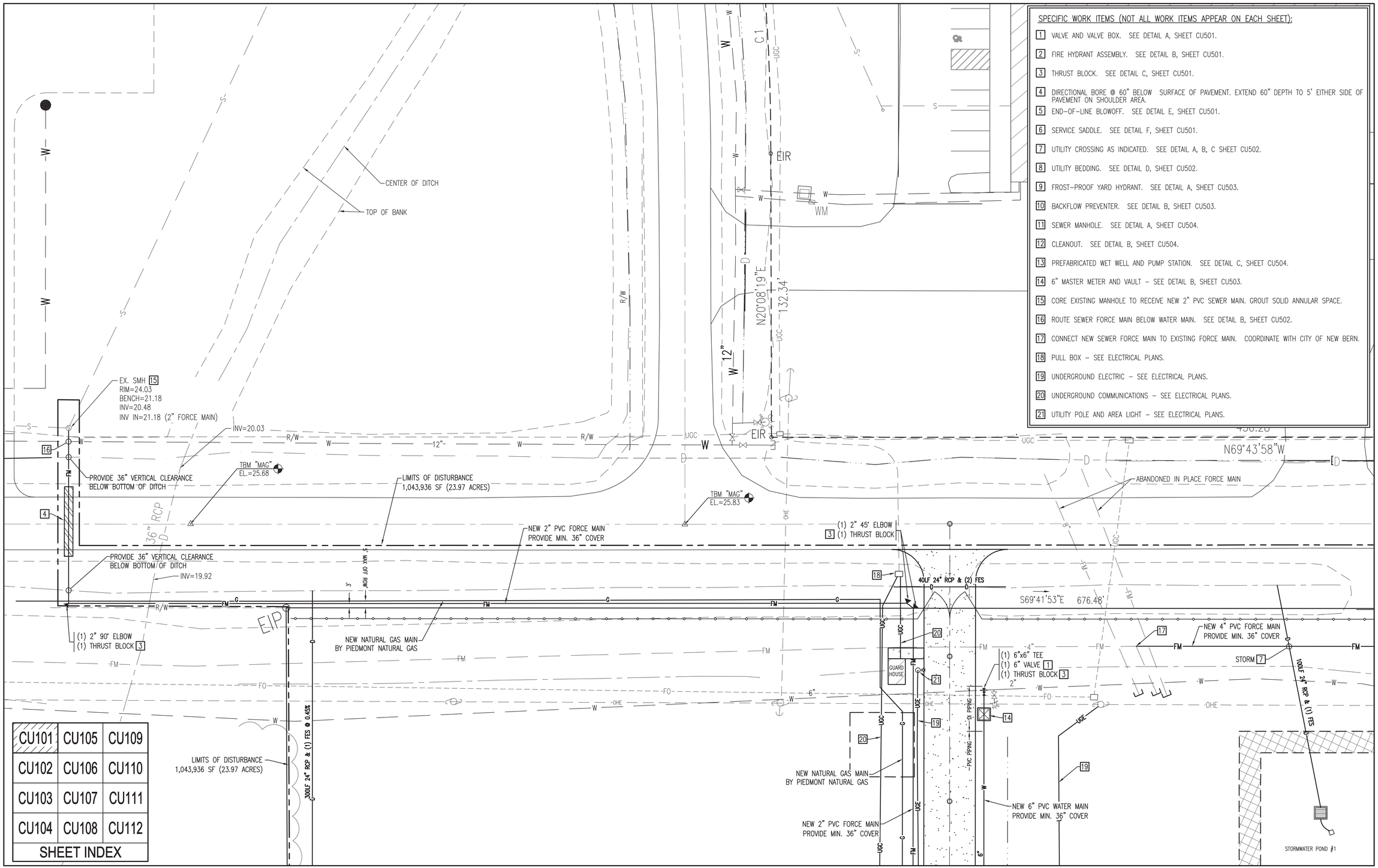

CU101	CU105	CU109
CU102	CU106	CU110
CU103	CU107	CU111
CU104	CU108	CU112

SHEET INDEX

SPECIFIC WORK ITEMS (NOT ALL WORK ITEMS APPEAR ON EACH SHEET):

1. VALVE AND VALVE BOX. SEE DETAIL A, SHEET CU501.
2. FIRE HYDRANT ASSEMBLY. SEE DETAIL B, SHEET CU501.
3. THRUST BLOCK. SEE DETAIL C, SHEET CU501.
4. DIRECTIONAL BORE @ 60" BELOW SURFACE OF PAVEMENT. EXTEND 60" DEPTH TO 5' EITHER SIDE OF PAVEMENT ON SHOULDER AREA.
5. END-OF-LINE BLOWOFF. SEE DETAIL E, SHEET CU501.
6. SERVICE SADDLE. SEE DETAIL F, SHEET CU501.
7. UTILITY CROSSING AS INDICATED. SEE DETAIL A, B, C SHEET CU502.
8. UTILITY BEDDING. SEE DETAIL D, SHEET CU502.
9. FROST-PROOF YARD HYDRANT. SEE DETAIL A, SHEET CU503.
10. BACKFLOW PREVENTER. SEE DETAIL B, SHEET CU503.
11. SEWER MANHOLE. SEE DETAIL A, SHEET CU504.
12. CLEANOUT. SEE DETAIL B, SHEET CU504.
13. PREFABRICATED WET WELL AND PUMP STATION. SEE DETAIL C, SHEET CU504.
14. 6" MASTER METER AND VAULT – SEE DETAIL B, SHEET CU503.
15. CORE EXISTING MANHOLE TO RECEIVE NEW 2" PVC SEWER MAIN. GROUT SOLID ANNULAR SPACE.
16. ROUTE SEWER FORCE MAIN BELOW WATER MAIN. SEE DETAIL B, SHEET CU502.
17. CONNECT NEW SEWER FORCE MAIN TO EXISTING FORCE MAIN. COORDINATE WITH CITY OF NEW BERN.
18. PULL BOX – SEE ELECTRICAL PLANS.
19. UNDERGROUND ELECTRIC – SEE ELECTRICAL PLANS.
20. UNDERGROUND COMMUNICATIONS – SEE ELECTRICAL PLANS.
21. UTILITY POLE AND AREA LIGHT – SEE ELECTRICAL PLANS.

A ENLARGED SITE UTILITY PLAN
SCALE: 1" = 20'

NOTE:
SEE SHEET GI001 FOR BID ALTERNATE INFORMATION. ALL CIVIL WORK DEPICTED THIS SHEET IS BASE BID WORK UNLESS SPECIFICALLY DESIGNATED AS BID ALTERNATE WORK.

GRAPHIC SCALE: 1" = 20'

LICENSE NO. C-0706
A/E PROJECT #23020
AVOLIS ENGINEERING, P.A.
P.O. BOX 15564
NEW BERN, NC 28561
PH. (252) 633-0068
kevin@avoliseng.com

WALKER the GROUP ARCHITECTURE incorporated
PO BOX 541, NEW BERN, NC 28563
2526366778

NORTH CAROLINA PROFESSIONAL SEAL 15738 ENGINEER JOHN K. AVOLIS
Digitally signed by John K. Avolis
JULY 28, 2025

PUBLIC SAFETY TRAINING CENTER

525 Executive Pkwy
New Bern, NC 28562

BID DOCUMENTS
SCO # 24-27879-01A

No.	Date	Revisions

Project Number
Date 7-28-2025
Drawn MSP
Checked JKA
Scale AS NOTED
Drawing Title
ENLARGED SITE UTILITY PLAN

Sheet Number 59 of 158
Drawing Number
CU101

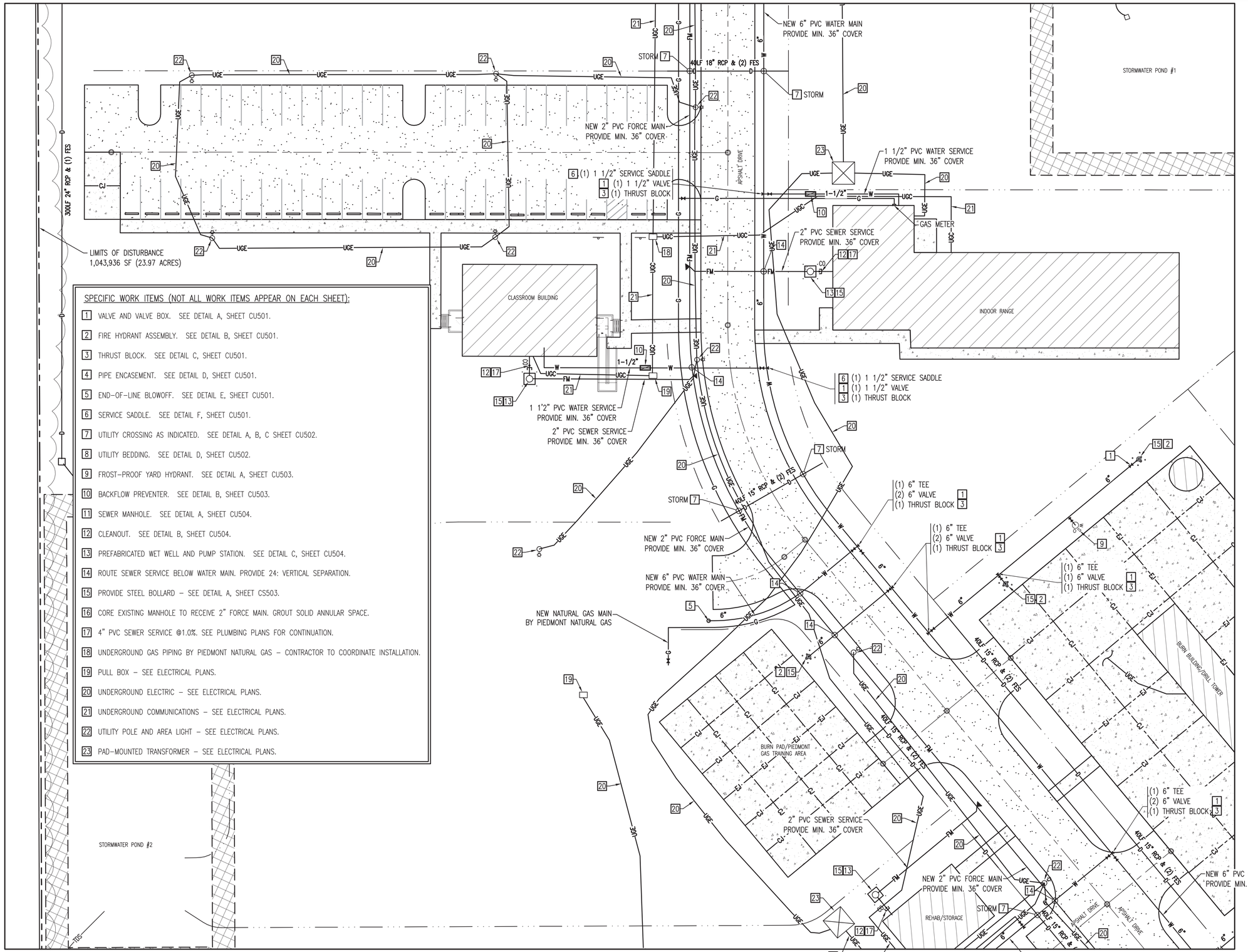

SPECIFIC WORK ITEMS (NOT ALL WORK ITEMS APPEAR ON EACH SHEET):

1. VALVE AND VALVE BOX. SEE DETAIL A, SHEET CU501.
2. FIRE HYDRANT ASSEMBLY. SEE DETAIL B, SHEET CU501.
3. THRUST BLOCK. SEE DETAIL C, SHEET CU501.
4. PIPE ENCASEMENT. SEE DETAIL D, SHEET CU501.
5. END-OF-LINE BLOWOFF. SEE DETAIL E, SHEET CU501.
6. SERVICE SADDLE. SEE DETAIL F, SHEET CU501.
7. UTILITY CROSSING AS INDICATED. SEE DETAIL A, B, C SHEET CU502.
8. UTILITY BEDDING. SEE DETAIL D, SHEET CU502.
9. FROST-PROOF YARD HYDRANT. SEE DETAIL A, SHEET CU503.
10. BACKFLOW PREVENTER. SEE DETAIL B, SHEET CU503.
11. SEWER MANHOLE. SEE DETAIL A, SHEET CU504.
12. CLEANOUT. SEE DETAIL B, SHEET CU504.
13. PREFABRICATED WET WELL AND PUMP STATION. SEE DETAIL C, SHEET CU504.
14. ROUTE SEWER SERVICE BELOW WATER MAIN. PROVIDE 24: VERTICAL SEPARATION.
15. PROVIDE STEEL BOLLARD – SEE DETAIL A, SHEET CS503.
16. CORE EXISTING MANHOLE TO RECEIVE 2" FORCE MAIN. GROUT SOLID ANNULAR SPACE.
17. 4" PVC SEWER SERVICE @1.0%. SEE PLUMBING PLANS FOR CONTINUATION.
18. UNDERGROUND GAS PIPING BY PIEDMONT NATURAL GAS – CONTRACTOR TO COORDINATE INSTALLATION.
19. PULL BOX – SEE ELECTRICAL PLANS.
20. UNDERGROUND ELECTRIC – SEE ELECTRICAL PLANS.
21. UNDERGROUND COMMUNICATIONS – SEE ELECTRICAL PLANS.
22. UTILITY POLE AND AREA LIGHT – SEE ELECTRICAL PLANS.
23. PAD-MOUNTED TRANSFORMER – SEE ELECTRICAL PLANS.

A ENLARGED SITE UTILITY PLAN

SCALE: 1" = 20'

TN PN

NOTE:
SEE SHEET GI001 FOR BID ALTERNATE INFORMATION. ALL CIVIL WORK DEPICTED THIS SHEET IS BASE BID WORK UNLESS SPECIFICALLY DESIGNATED AS BID ALTERNATE WORK.

20 0 10 20 40
GRAPHIC SCALE: 1" = 20'

AVOLIS ENGINEERING, P.A.
P.O. BOX 15564
NEW BERN, NC 28561
PH. (252) 633-0068
kevin@avoliseng.com
LICENSE NO. C-0706
A/E PROJECT #23020

CU101	CU105	CU109
CU102	CU106	CU110
CU103	CU107	CU111
CU104	CU108	CU112

SHEET INDEX

WALKER the GROUP ARCHITECTURE incorporated
PO BOX 541, NEW BERN, NC 28563
2526366778

Digitally signed by John K. Avolis
NORTH CAROLINA PROFESSIONAL SEAL 15738 ENGINEER JOHN K. AVOLIS
JULY 28, 2025

PUBLIC SAFETY TRAINING CENTER

525 Executive Pkwy
New Bern, NC 28562

BID DOCUMENTS

SCO # 24-27879-01A

Revisions

No.	Date

Project Number

Date
7-28-2025

Drawn
MSP

Checked
JKA

Scale
AS NOTED

Drawing Title

ENLARGED SITE UTILITY PLAN

Sheet Number
60 of **158**

Drawing Number
CU102

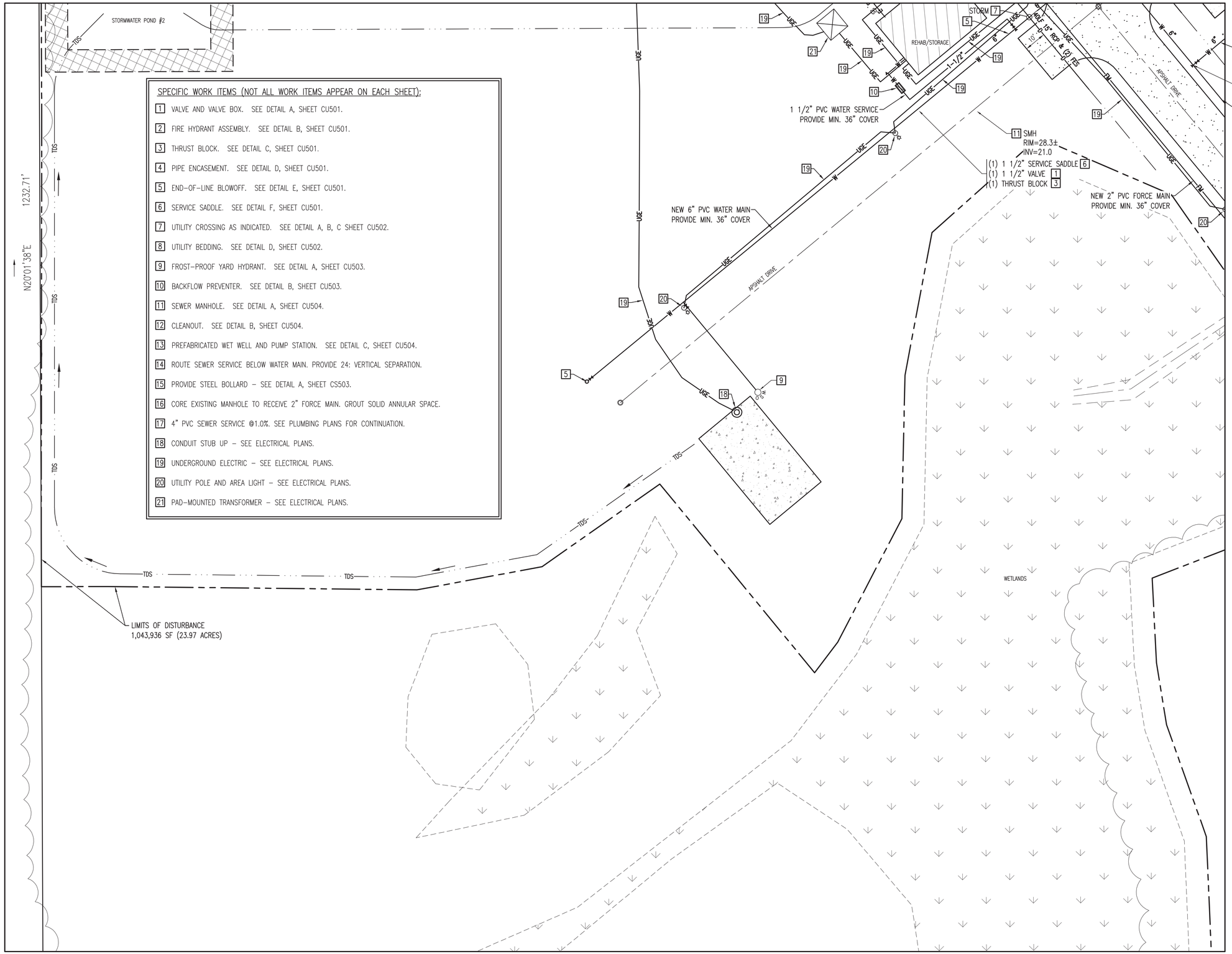

SPECIFIC WORK ITEMS (NOT ALL WORK ITEMS APPEAR ON EACH SHEET):

1. VALVE AND VALVE BOX. SEE DETAIL A, SHEET CU501.
2. FIRE HYDRANT ASSEMBLY. SEE DETAIL B, SHEET CU501.
3. THRUST BLOCK. SEE DETAIL C, SHEET CU501.
4. PIPE ENCASEMENT. SEE DETAIL D, SHEET CU501.
5. END-OF-LINE BLOWOFF. SEE DETAIL E, SHEET CU501.
6. SERVICE SADDLE. SEE DETAIL F, SHEET CU501.
7. UTILITY CROSSING AS INDICATED. SEE DETAIL A, B, C SHEET CU502.
8. UTILITY BEDDING. SEE DETAIL D, SHEET CU502.
9. FROST-PROOF YARD HYDRANT. SEE DETAIL A, SHEET CU503.
10. BACKFLOW PREVENTER. SEE DETAIL B, SHEET CU503.
11. SEWER MANHOLE. SEE DETAIL A, SHEET CU504.
12. CLEANOUT. SEE DETAIL B, SHEET CU504.
13. PREFABRICATED WET WELL AND PUMP STATION. SEE DETAIL C, SHEET CU504.
14. ROUTE SEWER SERVICE BELOW WATER MAIN. PROVIDE 24: VERTICAL SEPARATION.
15. PROVIDE STEEL BOLLARD – SEE DETAIL A, SHEET CS503.
16. CORE EXISTING MANHOLE TO RECEIVE 2" FORCE MAIN. GROUT SOLID ANNULAR SPACE.
17. 4" PVC SEWER SERVICE @1.0%. SEE PLUMBING PLANS FOR CONTINUATION.
18. CONDUIT STUB UP – SEE ELECTRICAL PLANS.
19. UNDERGROUND ELECTRIC – SEE ELECTRICAL PLANS.
20. UTILITY POLE AND AREA LIGHT – SEE ELECTRICAL PLANS.
21. PAD-MOUNTED TRANSFORMER – SEE ELECTRICAL PLANS.

CU101	CU105	CU109
CU102	CU106	CU110
CU103	CU107	CU111
CU104	CU108	CU112
SHEET INDEX		

A ENLARGED SITE UTILITY PLAN

SCALE: 1" = 20'

TN PN

20 0 10 20 40

GRAPHIC SCALE: 1" = 20'

AVOLIS ENGINEERING, P.A.
P.O. BOX 15564
NEW BERN, NC 28561
PH. (252) 633-0068
kevin@avoliseng.com
LICENSE NO. C-0706
A/E PROJECT #23020

WALKER the GROUP ARCHITECTURE incorporated
PO BOX 541, NEW BERN, NC 28563
2526366778

Digitally signed by John K. Avolis
NORTH CAROLINA PROFESSIONAL SEAL 15738 ENGINEER JOHN K. AVOLIS
JULY 28, 2025

PUBLIC SAFETY TRAINING CENTER

525 Executive Pkwy
New Bern, NC 28562

BID DOCUMENTS

SCO # 24-27879-01A

No.	Date	Revisions

Project Number

Date **7-28-2025**

Drawn **MSP**

Checked **JKA**

Scale **AS NOTED**

Drawing Title

ENLARGED SITE UTILITY PLAN

Sheet Number **61** of **158**

Drawing Number

CU103

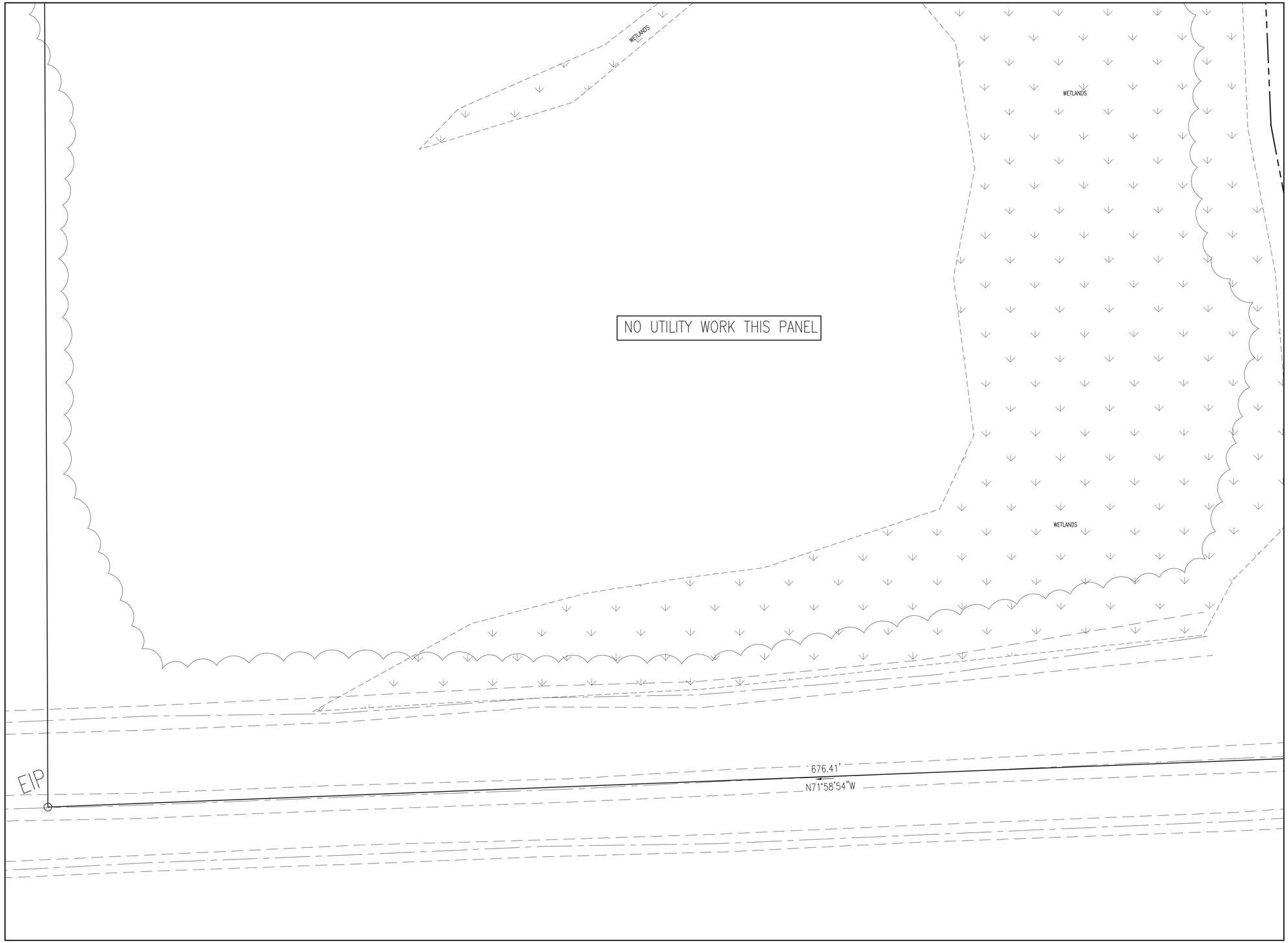

CU101	CU105	CU109
CU102	CU106	CU110
CU103	CU107	CU111
CU104	CU108	CU112

SHEET INDEX

A ENLARGED SITE UTILITY PLAN
SCALE: 1" = 20'

TN PN

NOTE:
SEE SHEET GI001 FOR BID ALTERNATE INFORMATION. ALL CIVIL WORK DEPICTED THIS SHEET IS BASE BID WORK UNLESS SPECIFICALLY DESIGNATED AS BID ALTERNATE WORK.

20 0 10 20 40
GRAPHIC SCALE: 1" = 20'

LICENSE NO. C-0706
A/E PROJECT #23020
AVOLIS ENGINEERING, P.A.
P.O. BOX 15564
NEW BERN, NC 28561
PH. (252) 633-0068
kevin@avoliseng.com

WALKER the GROUP ARCHITECTURE incorporated
PO BOX 541, NEW BERN, NC 28563
2526366778

Digitally signed by John K. Avolis
NORTH CAROLINA PROFESSIONAL SEAL 15738 ENGINEER JOHN K. AVOLIS
JULY 28, 2025

PUBLIC SAFETY TRAINING CENTER

525 Executive Pkwy
New Bern, NC 28562

BID DOCUMENTS
SCO # 24-27879-01A

No.	Date	Revisions

Project Number

Date **7-28-2025**

Drawn **MSP**

Checked **JKA**

Scale **AS NOTED**

Drawing Title

ENLARGED SITE UTILITY PLAN

Sheet Number **62** of **158**

Drawing Number

CU104

CU101	CU105	CU109
CU102	CU106	CU110
CU103	CU107	CU111
CU104	CU108	CU112
SHEET INDEX		

SPECIFIC WORK ITEMS (NOT ALL WORK ITEMS APPEAR ON EACH SHEET):

1. VALVE AND VALVE BOX. SEE DETAIL A, SHEET CU501.
2. FIRE HYDRANT ASSEMBLY. SEE DETAIL B, SHEET CU501.
3. THRUST BLOCK. SEE DETAIL C, SHEET CU501.
4. PIPE ENCASEMENT. SEE DETAIL D, SHEET CU501.
5. END-OF-LINE BLOWOFF. SEE DETAIL E, SHEET CU501.
6. SERVICE SADDLE. SEE DETAIL F, SHEET CU501.
7. UTILITY CROSSING AS INDICATED. SEE DETAIL A, B, C SHEET CU502.
8. UTILITY BEDDING. SEE DETAIL D, SHEET CU502.
9. FROST-PROOF YARD HYDRANT. SEE DETAIL A, SHEET CU503.
10. BACKFLOW PREVENTER. SEE DETAIL B, SHEET CU503.
11. SEWER MANHOLE. SEE DETAIL A, SHEET CU504.
12. CLEANOUT. SEE DETAIL B, SHEET CU504.
13. PREFABRICATED WET WELL AND PUMP STATION. SEE DETAIL C, SHEET CU504.
14. 6" MASTER METER AND VAULT – SEE DETAIL B, SHEET CU503.
15. CORE EXISTING MANHOLE TO RECEIVE NEW 8" PVC SEWER MAIN. GROUT SOLID ANNULAR SPACE.
16. ROUTE SEWER SERVICE BELOW WATER MAIN. PROVIDE 24" VERTICAL SEPARATION.
17. CONNECT NEW SEWER FORCE MAIN TO EXISTING FORCE MAIN. COORDINATE WITH CITY OF NEW BERN.

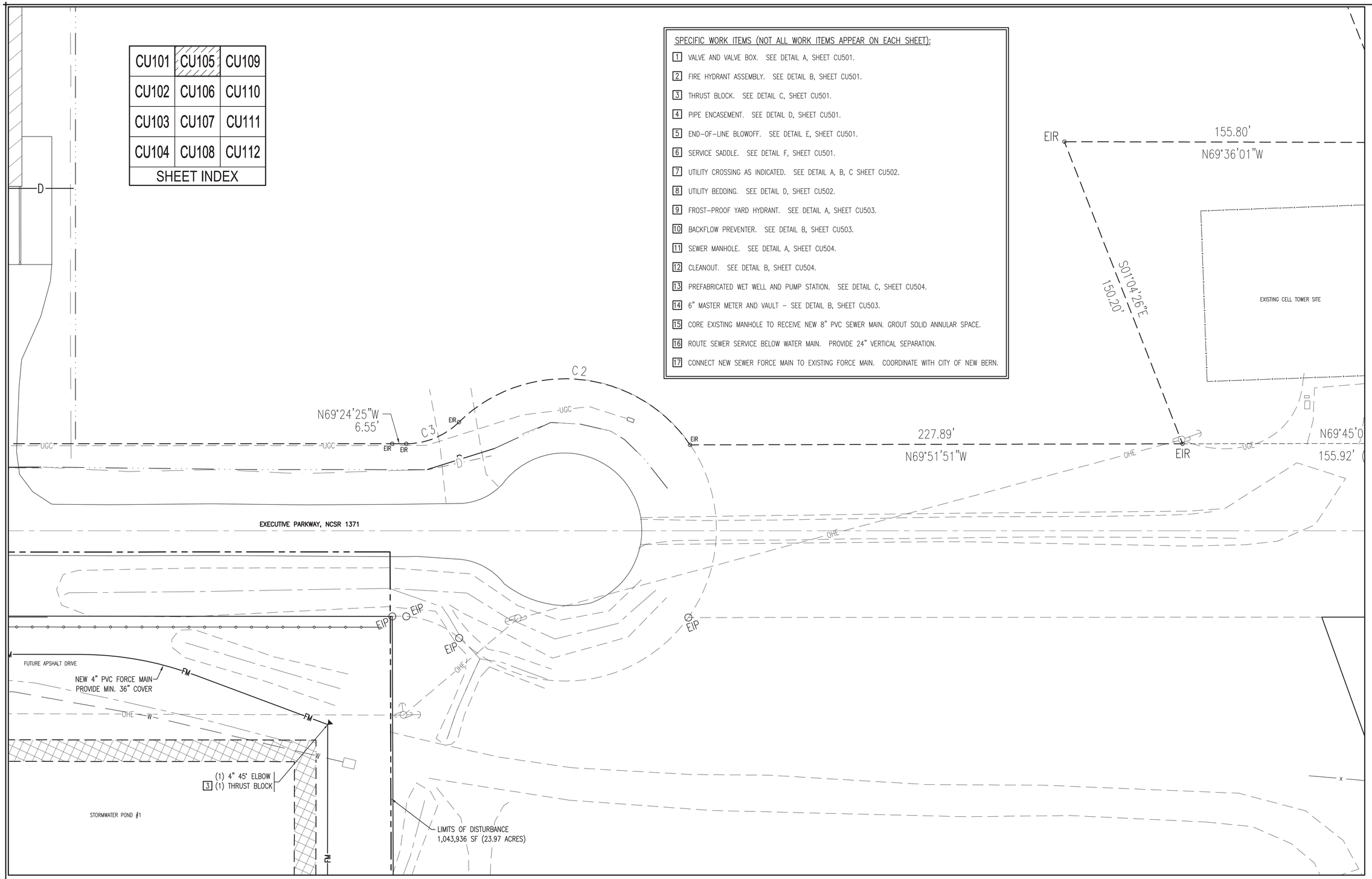

A ENLARGED SITE UTILITY PLAN

SCALE: 1" = 20'

TN PN

NOTE:
SEE SHEET GI001 FOR BID ALTERNATE INFORMATION. ALL CIVIL WORK DEPICTED THIS SHEET IS BASE BID WORK UNLESS SPECIFICALLY DESIGNATED AS BID ALTERNATE WORK.

20 0 10 20 40

GRAPHIC SCALE: 1" = 20'

AVOLIS ENGINEERING, P.A.
P.O. BOX 15564
NEW BERN, NC 28561
PH. (252) 633-0068
kevin@avoliseng.com
LICENSE NO. C-0706
A/E PROJECT #23020

WALKER the GROUP ARCHITECTURE incorporated
PO BOX 541, NEW BERN, NC 28563
2526366778

Digitally signed by John K. Avolis
NORTH CAROLINA PROFESSIONAL SEAL 15738 ENGINEER JOHN K. AVOLIS
JULY 28, 2025

PUBLIC SAFETY TRAINING CENTER

525 Executive Pkwy
New Bern, NC 28562

BID DOCUMENTS

SCO # 24-27879-01A

No.	Date	Revisions

Project Number

Date **7-28-2025**

Drawn **MSP**

Checked **JKA**

Scale **AS NOTED**

Drawing Title

ENLARGED SITE UTILITY PLAN

Sheet Number **63** of **158**

Drawing Number

CU105

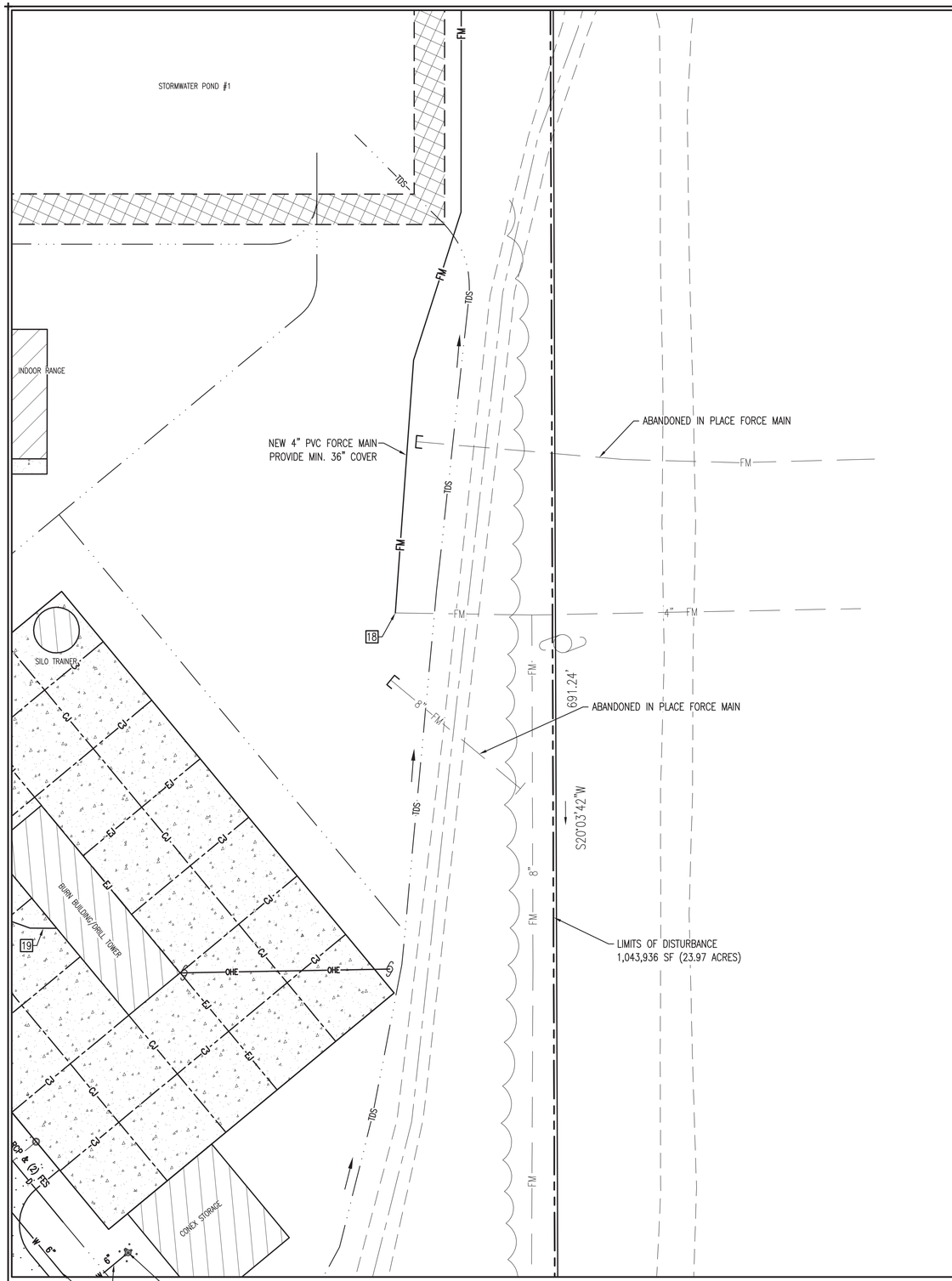

A ENLARGED SITE UTILITY PLAN

SCALE: 1" = 20'

TN PN

SPECIFIC WORK ITEMS (NOT ALL WORK ITEMS APPEAR ON EACH SHEET):

1. VALVE AND VALVE BOX. SEE DETAIL A, SHEET CU501.
2. FIRE HYDRANT ASSEMBLY. SEE DETAIL B, SHEET CU501.
3. THRUST BLOCK. SEE DETAIL C, SHEET CU501.
4. PIPE ENCASEMENT. SEE DETAIL D, SHEET CU501.
5. END-OF-LINE BLOWOFF. SEE DETAIL E, SHEET CU501.
6. SERVICE SADDLE. SEE DETAIL F, SHEET CU501.
7. UTILITY CROSSING AS INDICATED. SEE DETAIL A, B, C SHEET CU502.
8. UTILITY BEDDING. SEE DETAIL D, SHEET CU502.
9. FROST-PROOF YARD HYDRANT. SEE DETAIL A, SHEET CU503.
10. BACKFLOW PREVENTER. SEE DETAIL B, SHEET CU503.
11. SEWER MANHOLE. SEE DETAIL A, SHEET CU504.
12. CLEANOUT. SEE DETAIL B, SHEET CU504.
13. PREFABRICATED WET WELL AND PUMP STATION. SEE DETAIL C, SHEET CU504.
14. ROUTE SEWER SERVICE BELOW WATER MAIN. PROVIDE 24: VERTICAL SEPARATION.
15. PROVIDE STEEL BOLLARD - SEE DETAIL A, SHEET CS503.
16. CORE EXISTING MANHOLE TO RECEIVE 2" FORCE MAIN. GROUT SOLID ANNULAR SPACE.
17. 4" PVC SEWER SERVICE @1.0%. SEE PLUMBING PLANS FOR CONTINUATION.
18. CONNECT NEW SEWER FORCE MAIN TO EXISTING FORCE MAIN. COORDINATE WITH CITY OF NEW BERN.
19. UNDERGROUND ELECTRIC - SEE ELECTRICAL PLANS.

NOTE:
SEE SHEET GI001 FOR BID ALTERNATE INFORMATION.
ALL CIVIL WORK DEPICTED THIS SHEET IS BASE BID WORK UNLESS SPECIFICALLY DESIGNATED AS BID ALTERNATE WORK.

CU101	CU105	CU109
CU102	CU106	CU110
CU103	CU107	CU111
CU104	CU108	CU112

SHEET INDEX

20 0 10 20 40
GRAPHIC SCALE: 1" = 20'

LICENSE NO. C-0706
A/E PROJECT #23020
AVOLIS ENGINEERING, P.A.
P.O. BOX 15564
NEW BERN, NC 28561
PH. (252) 633-0068
kevin@avoliseng.com

WALKER the GROUP ARCHITECTURE incorporated
PO BOX 541, NEW BERN, NC 28563
2526366778

Digitally signed by John K. Avolis
NORTH CAROLINA PROFESSIONAL SEAL 15738 ENGINEER JOHN K. AVOLIS
JULY 28, 2025

PUBLIC SAFETY TRAINING CENTER

525 Executive Pkwy
New Bern, NC 28562

BID DOCUMENTS
SCO # 24-27879-01A

Revisions
No. Date

Project Number
Date **7-28-2025**
Drawn **MSP**
Checked **JKA**
Scale **AS NOTED**
Drawing Title

ENLARGED SITE UTILITY PLAN

Sheet Number **64** of **158**
Drawing Number
CU106

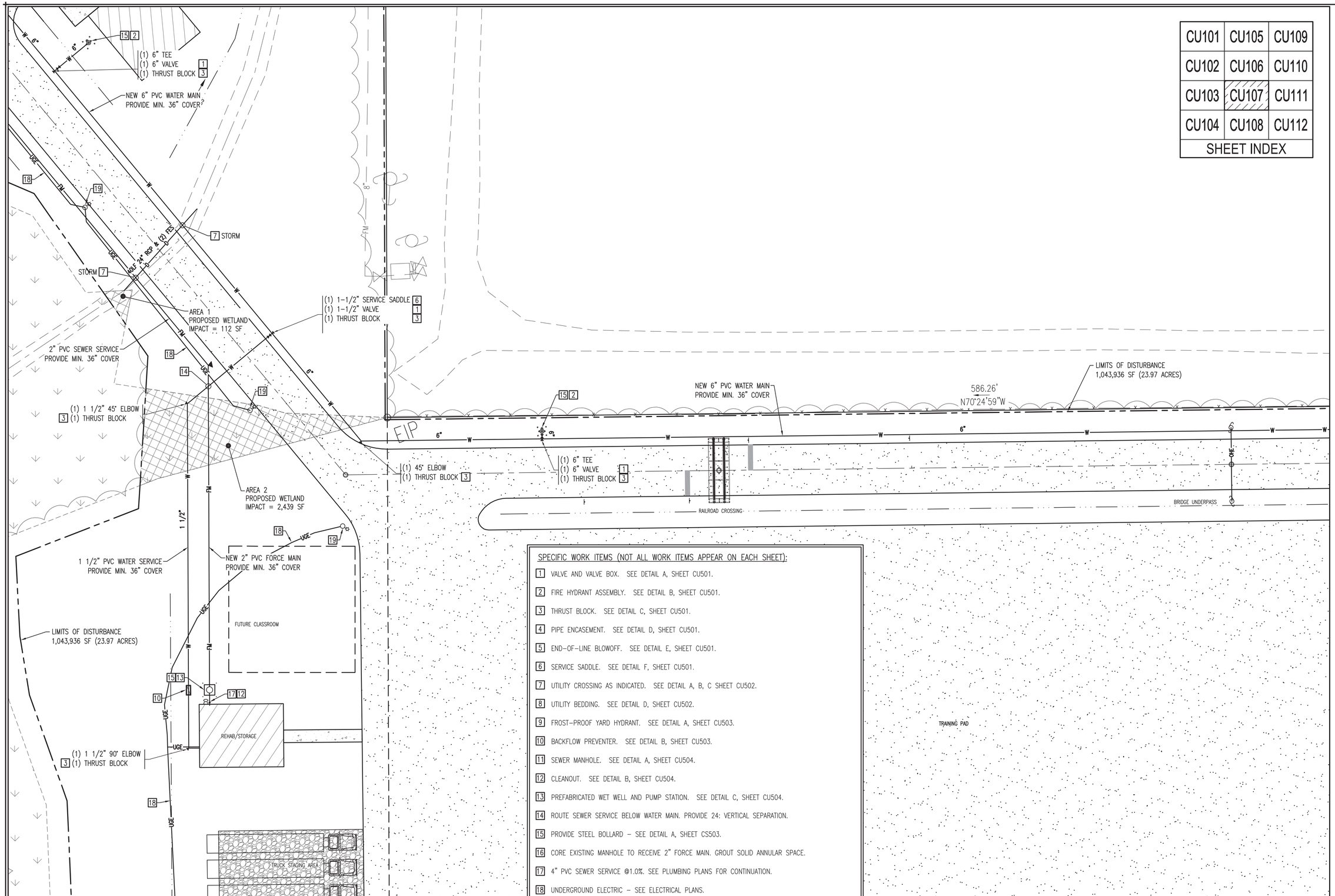

CU101	CU105	CU109
CU102	CU106	CU110
CU103	CU107	CU111
CU104	CU108	CU112

SHEET INDEX

SPECIFIC WORK ITEMS (NOT ALL WORK ITEMS APPEAR ON EACH SHEET):

1. VALVE AND VALVE BOX. SEE DETAIL A, SHEET CU501.
2. FIRE HYDRANT ASSEMBLY. SEE DETAIL B, SHEET CU501.
3. THRUST BLOCK. SEE DETAIL C, SHEET CU501.
4. PIPE ENCASEMENT. SEE DETAIL D, SHEET CU501.
5. END-OF-LINE BLOWOFF. SEE DETAIL E, SHEET CU501.
6. SERVICE SADDLE. SEE DETAIL F, SHEET CU501.
7. UTILITY CROSSING AS INDICATED. SEE DETAIL A, B, C SHEET CU502.
8. UTILITY BEDDING. SEE DETAIL D, SHEET CU502.
9. FROST-PROOF YARD HYDRANT. SEE DETAIL A, SHEET CU503.
10. BACKFLOW PREVENTER. SEE DETAIL B, SHEET CU503.
11. SEWER MANHOLE. SEE DETAIL A, SHEET CU504.
12. CLEANOUT. SEE DETAIL B, SHEET CU504.
13. PREFABRICATED WET WELL AND PUMP STATION. SEE DETAIL C, SHEET CU504.
14. ROUTE SEWER SERVICE BELOW WATER MAIN. PROVIDE 24: VERTICAL SEPARATION.
15. PROVIDE STEEL BOLLARD - SEE DETAIL A, SHEET CS503.
16. CORE EXISTING MANHOLE TO RECEIVE 2" FORCE MAIN. GROUT SOLID ANNULAR SPACE.
17. 4" PVC SEWER SERVICE @1.0%. SEE PLUMBING PLANS FOR CONTINUATION.
18. UNDERGROUND ELECTRIC - SEE ELECTRICAL PLANS.
19. UTILITY POLE AND AREA LIGHT - SEE ELECTRICAL PLANS.

A ENLARGED SITE UTILITY PLAN

SCALE: 1" = 20'

TN PN

NOTE:
SEE SHEET GI001 FOR BID ALTERNATE INFORMATION. ALL CIVIL WORK DEPICTED THIS SHEET IS BASE BID WORK UNLESS SPECIFICALLY DESIGNATED AS BID ALTERNATE WORK.

20 0 10 20 40
GRAPHIC SCALE: 1" = 20'

LICENSE NO. C-0706
A/E PROJECT #23020
AVOLIS ENGINEERING, P.A.
P.O. BOX 15564
NEW BERN, NC 28561
PH. (252) 633-0068
kevin@avoliseng.com

WALKER the GROUP ARCHITECTURE incorporated
PO BOX 541, NEW BERN, NC 28563
2526366778

Digitally signed by John K. Avolis
NORTH CAROLINA PROFESSIONAL SEAL 15738 ENGINEER JOHN K. AVOLIS
JULY 28, 2025

PUBLIC SAFETY TRAINING CENTER

525 Executive Pkwy
New Bern, NC 28562

BID DOCUMENTS

SCO # 24-27879-01A

Revisions

No.	Date

Project Number

Date **7-28-2025**

Drawn **MSP**

Checked **JKA**

Scale **AS NOTED**

Drawing Title

ENLARGED SITE UTILITY PLAN

Sheet Number **65** of **158**

Drawing Number

CU107

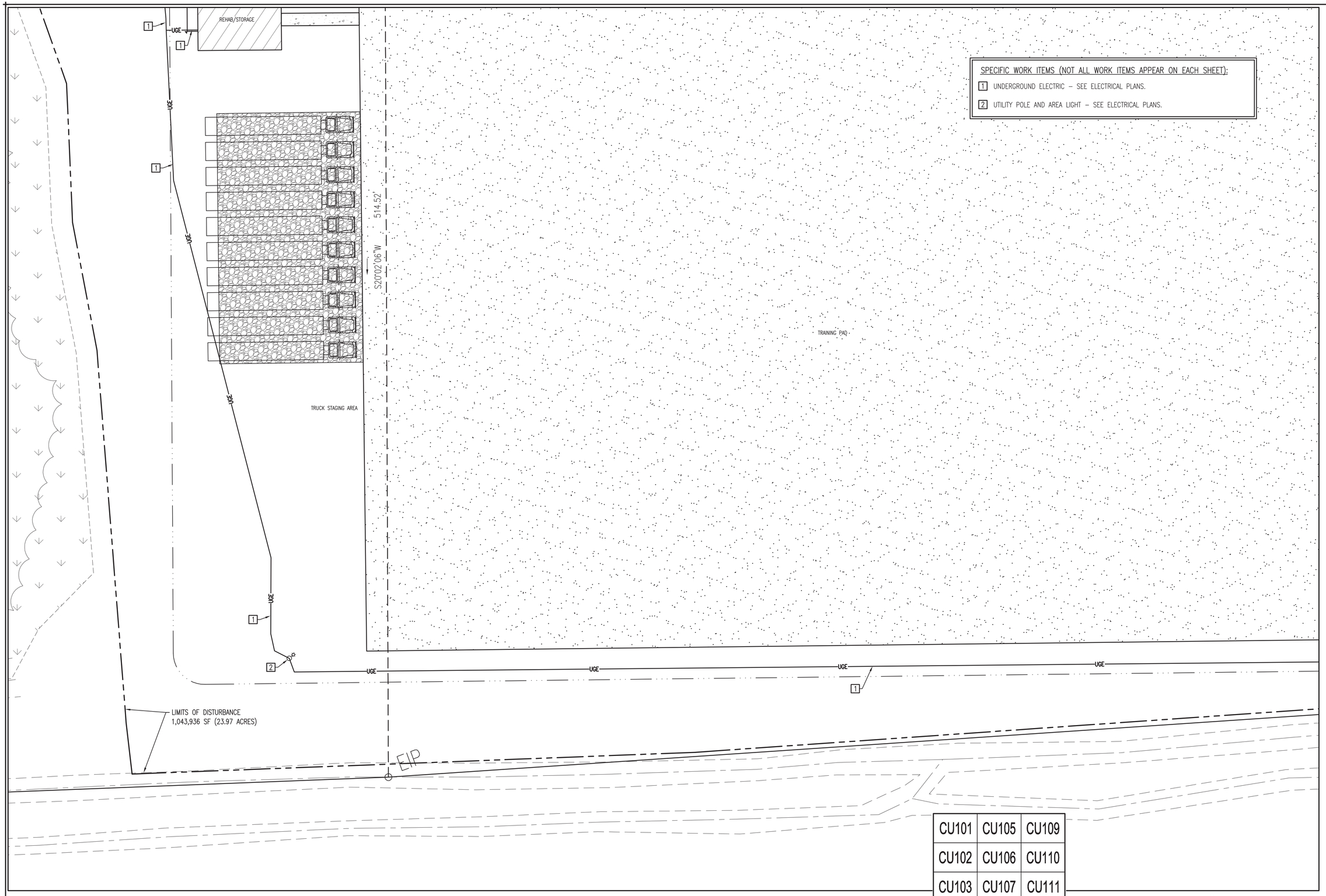

SPECIFIC WORK ITEMS (NOT ALL WORK ITEMS APPEAR ON EACH SHEET):

1. UNDERGROUND ELECTRIC – SEE ELECTRICAL PLANS.
2. UTILITY POLE AND AREA LIGHT – SEE ELECTRICAL PLANS.

CU101	CU105	CU109
CU102	CU106	CU110
CU103	CU107	CU111
CU104	CU108	CU112

SHEET INDEX

A ENLARGED SITE UTILITY PLAN

SCALE: 1" = 20'

TN PN

NOTE:
SEE SHEET GI001 FOR BID ALTERNATE INFORMATION. ALL CIVIL WORK DEPICTED THIS SHEET IS BASE BID WORK UNLESS SPECIFICALLY DESIGNATED AS BID ALTERNATE WORK.

20 0 10 20 40
GRAPHIC SCALE: 1" = 20'

LICENSE NO. C-0706
A/E PROJECT #23020
AVOLIS ENGINEERING, P.A.
P.O. BOX 15564
NEW BERN, NC 28561
PH. (252) 633-0068
kevin@avoliseng.com

WALKER the GROUP ARCHITECTURE incorporated
PO BOX 541, NEW BERN, NC 28563
2526366778

Digitally signed by John K. Avolis
NORTH CAROLINA PROFESSIONAL SEAL 15738 ENGINEER JOHN K. AVOLIS
JULY 28, 2025

PUBLIC SAFETY TRAINING CENTER

525 Executive Pkwy
New Bern, NC 28562

BID DOCUMENTS
SCO # 24-27879-01A

Revisions
No. Date

Project Number
Date **7-28-2025**
Drawn **MSP**
Checked **JKA**
Scale **AS NOTED**
Drawing Title

ENLARGED SITE UTILITY PLAN

Sheet Number **66** of **158**
Drawing Number
CU108

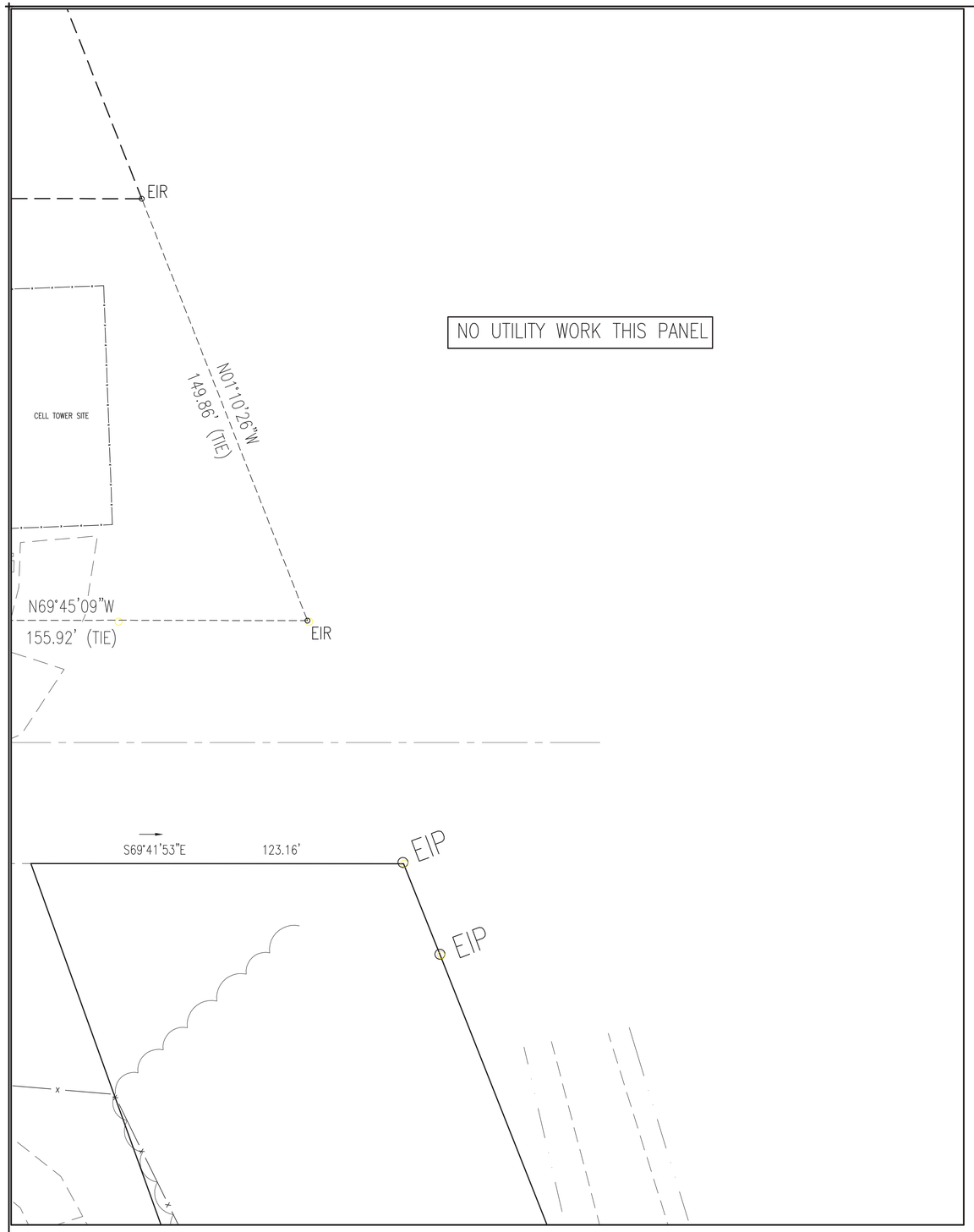

NO UTILITY WORK THIS PANEL

A ENLARGED SITE UTILITY PLAN

SCALE: 1" = 20'

TN PN

NOTE:
SEE SHEET GI001 FOR BID ALTERNATE INFORMATION. ALL CIVIL WORK DEPICTED THIS SHEET IS BASE BID WORK UNLESS SPECIFICALLY DESIGNATED AS BID ALTERNATE WORK.

CU101	CU105	CU109
CU102	CU106	CU110
CU103	CU107	CU111
CU104	CU108	CU112

SHEET INDEX

20 0 10 20 40
GRAPHIC SCALE: 1" = 20'

AVOLIS ENGINEERING, P.A.
P.O. BOX 15564
NEW BERN, NC 28561
PH. (252) 633-0068
kevin@avoliseng.com
LICENSE NO. C-0706
A/E PROJECT #23020

WALKER the GROUP ARCHITECTURE incorporated
PO BOX 541, NEW BERN, NC 28563
2526366778

Digitally signed by John K. Avolis
NORTH CAROLINA PROFESSIONAL SEAL 15738 ENGINEER JOHN K. AVOLIS
JULY 28, 2025

PUBLIC SAFETY TRAINING CENTER

525 Executive Pkwy
New Bern, NC 28562

BID DOCUMENTS

SCO # 24-27879-01A

No.	Date	Revisions

Project Number

Date **7-28-2025**

Drawn **MSP**

Checked **JKA**

Scale **AS NOTED**

Drawing Title

ENLARGED SITE UTILITY PLAN

Sheet Number **67** of **158**

Drawing Number

CU109

CU101	CU105	CU109
CU102	CU106	CU110
CU103	CU107	CU111
CU104	CU108	CU112

SHEET INDEX

A ENLARGED SITE UTILITY PLAN
SCALE: 1" = 20'

TN PN

NOTE:
SEE SHEET GI001 FOR BID ALTERNATE INFORMATION. ALL CIVIL WORK DEPICTED THIS SHEET IS BASE BID WORK UNLESS SPECIFICALLY DESIGNATED AS BID ALTERNATE WORK.

20 0 10 20 40
GRAPHIC SCALE: 1" = 20'

AVOLIS ENGINEERING, P.A.
P.O. BOX 15564
NEW BERN, NC 28561
PH. (252) 633-0068
kevin@avoliseng.com
LICENSE NO. C-0706
A/E PROJECT #23020

WALKER the GROUP ARCHITECTURE incorporated
PO BOX 541, NEW BERN, NC 28563
2526366778

Digitally signed by John K. Avolis
NORTH CAROLINA PROFESSIONAL SEAL 15738 ENGINEER JOHN K. AVOLIS
JULY 28, 2025

PUBLIC SAFETY TRAINING CENTER

525 Executive Pkwy
New Bern, NC 28562

BID DOCUMENTS
SCO # 24-27879-01A

No.	Date	Revisions

Project Number
Date **7-28-2025**
Drawn **MSP**
Checked **JKA**
Scale **AS NOTED**
Drawing Title

ENLARGED SITE UTILITY PLAN

Sheet Number **68** of **158**
Drawing Number
CU110

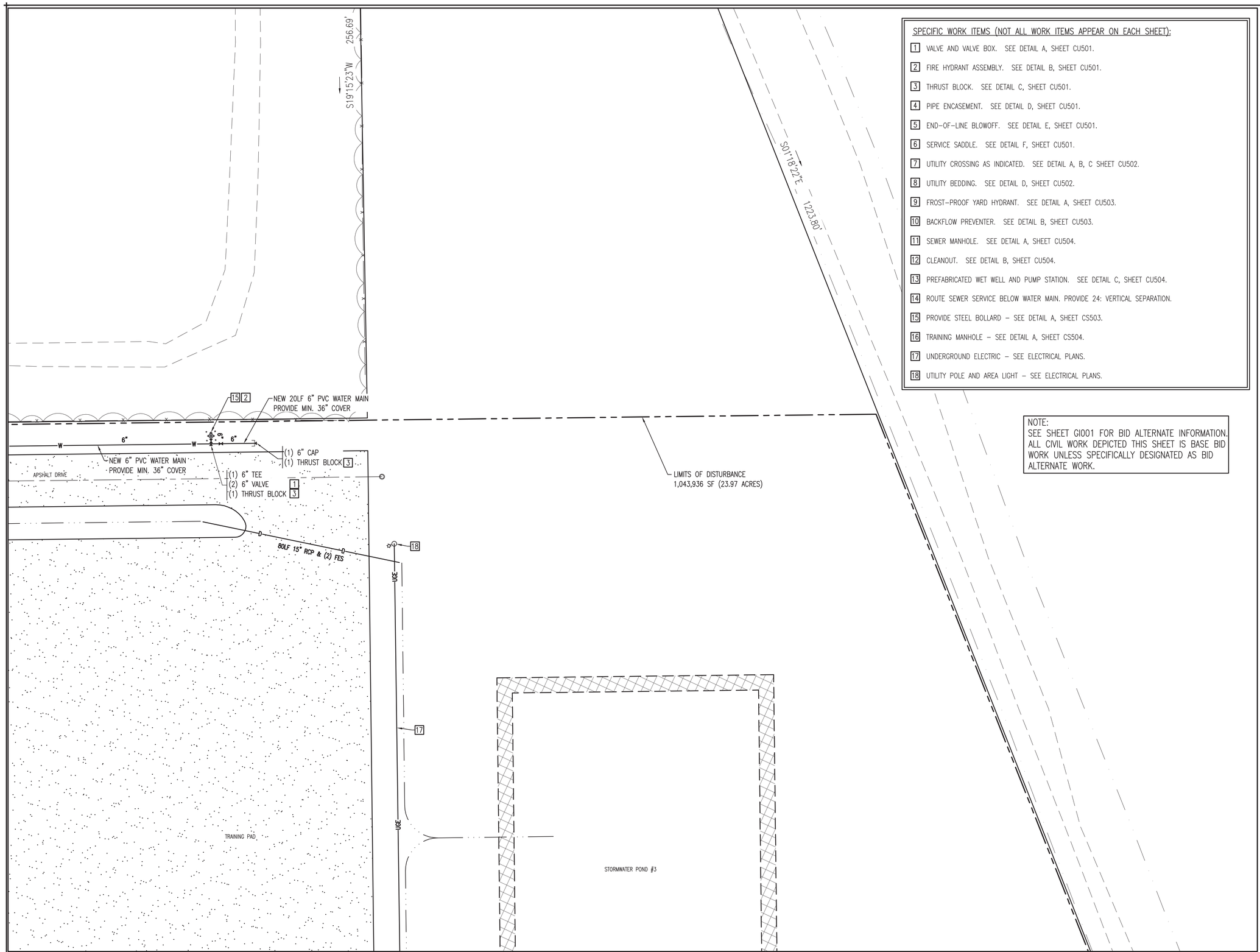

SPECIFIC WORK ITEMS (NOT ALL WORK ITEMS APPEAR ON EACH SHEET):

1. VALVE AND VALVE BOX. SEE DETAIL A, SHEET CU501.
2. FIRE HYDRANT ASSEMBLY. SEE DETAIL B, SHEET CU501.
3. THRUST BLOCK. SEE DETAIL C, SHEET CU501.
4. PIPE ENCASEMENT. SEE DETAIL D, SHEET CU501.
5. END-OF-LINE BLOWOFF. SEE DETAIL E, SHEET CU501.
6. SERVICE SADDLE. SEE DETAIL F, SHEET CU501.
7. UTILITY CROSSING AS INDICATED. SEE DETAIL A, B, C SHEET CU502.
8. UTILITY BEDDING. SEE DETAIL D, SHEET CU502.
9. FROST-PROOF YARD HYDRANT. SEE DETAIL A, SHEET CU503.
10. BACKFLOW PREVENTER. SEE DETAIL B, SHEET CU503.
11. SEWER MANHOLE. SEE DETAIL A, SHEET CU504.
12. CLEANOUT. SEE DETAIL B, SHEET CU504.
13. PREFABRICATED WET WELL AND PUMP STATION. SEE DETAIL C, SHEET CU504.
14. ROUTE SEWER SERVICE BELOW WATER MAIN. PROVIDE 24: VERTICAL SEPARATION.
15. PROVIDE STEEL BOLLARD – SEE DETAIL A, SHEET CS503.
16. TRAINING MANHOLE – SEE DETAIL A, SHEET CS504.
17. UNDERGROUND ELECTRIC – SEE ELECTRICAL PLANS.
18. UTILITY POLE AND AREA LIGHT – SEE ELECTRICAL PLANS.

NOTE:
SEE SHEET GI001 FOR BID ALTERNATE INFORMATION. ALL CIVIL WORK DEPICTED THIS SHEET IS BASE BID WORK UNLESS SPECIFICALLY DESIGNATED AS BID ALTERNATE WORK.

CU101	CU105	CU109
CU102	CU106	CU110
CU103	CU107	CU111
CU104	CU108	CU112

SHEET INDEX

A ENLARGED SITE UTILITY PLAN
SCALE: 1" = 20'

TN PN

20 0 10 20 40
GRAPHIC SCALE: 1" = 20'

AVOLIS ENGINEERING, P.A.
P.O. BOX 15564
NEW BERN, NC 28561
PH. (252) 633-0068
kevin@avoliseng.com
LICENSE NO. C-0706
A/E PROJECT #23020

WALKER the GROUP ARCHITECTURE incorporated
PO BOX 541, NEW BERN, NC 28563
2526366778

Digitally signed by John K. Avolis
NORTH CAROLINA PROFESSIONAL SEAL 15738 ENGINEER JOHN K. AVOLIS
JULY 28, 2025

PUBLIC SAFETY TRAINING CENTER

525 Executive Pkwy
New Bern, NC 28562

BID DOCUMENTS
SCO # 24-27879-01A

Revisions
No. Date

Project Number
Date **7-28-2025**
Drawn **MSP**
Checked **JKA**
Scale **AS NOTED**
Drawing Title

ENLARGED SITE UTILITY PLAN

Sheet Number **69** Of **158**
Drawing Number
CU111

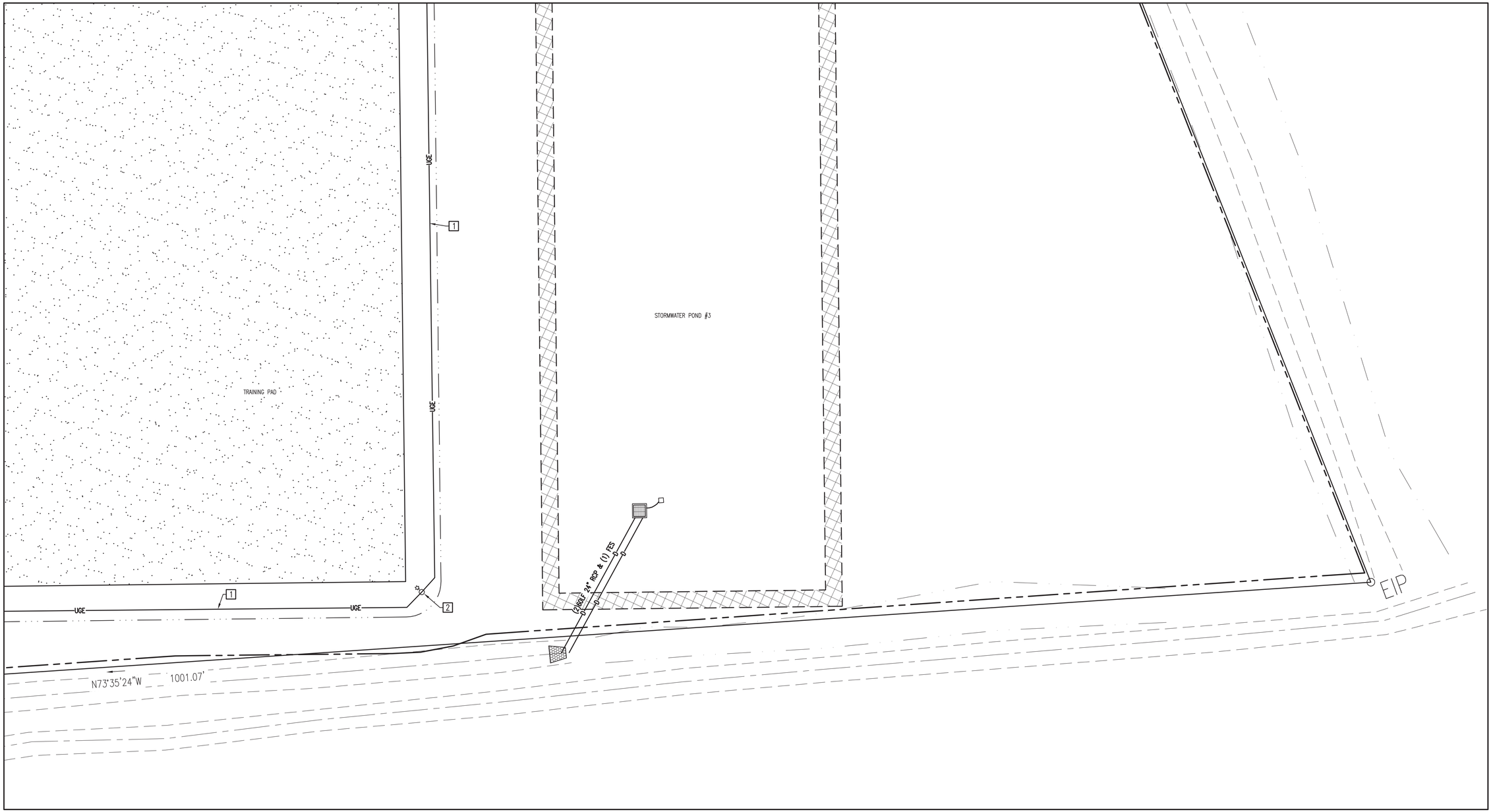

SPECIFIC WORK ITEMS (NOT ALL WORK ITEMS APPEAR ON EACH SHEET):

1 UNDERGROUND ELECTRIC – SEE ELECTRICAL PLANS.

2 UTILITY POLE AND AREA LIGHT – SEE ELECTRICAL PLANS.

NOTE:
SEE SHEET GI001 FOR BID ALTERNATE INFORMATION. ALL CIVIL WORK DEPICTED THIS SHEET IS BASE BID WORK UNLESS SPECIFICALLY DESIGNATED AS BID ALTERNATE WORK.

A ENLARGED SITE UTILITY PLAN
SCALE: 1" = 20'

TN PN

CU101	CU105	CU109
CU102	CU106	CU110
CU103	CU107	CU111
CU104	CU108	CU112

SHEET INDEX

20 0 10 20 40
GRAPHIC SCALE: 1" = 20'

A·E AVOLIS ENGINEERING, P.A.
LICENSE NO. C-0706
A/E PROJECT #23020
AVOLIS ENGINEERING, P.A.
P.O. BOX 15564
NEW BERN, NC 28561
PH. (252) 633-0068
kevin@avoliseng.com

WALKER the GROUP ARCHITECTURE incorporated
PO BOX 541, NEW BERN, NC 28563
2526366778

Digitally signed by John K. Avolis
NORTH CAROLINA PROFESSIONAL SEAL 15738 ENGINEER JOHN K. AVOLIS
JULY 28, 2025

PUBLIC SAFETY TRAINING CENTER

525 Executive Pkwy
New Bern, NC 28562

BID DOCUMENTS

SCO # 24-27879-01A

Revisions

No.	Date

Project Number

Date **7-28-2025**

Drawn **MSP**

Checked **JKA**

Scale **AS NOTED**

Drawing Title

ENLARGED SITE UTILITY PLAN

Sheet Number **70** of **158**

Drawing Number

CU112

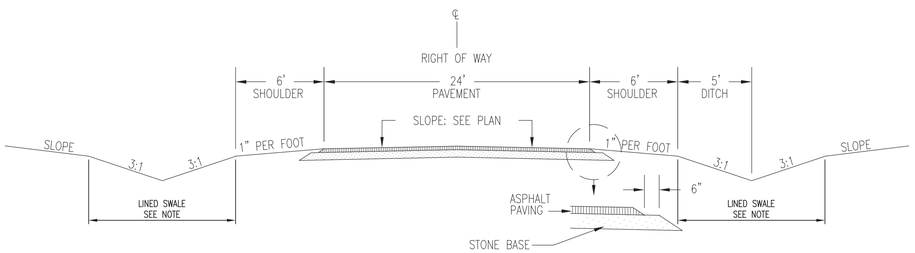

NOTE: ALL PROJECT SWALES INCLUDING ROADSIDE SWALES SHALL BE LINED IN ACCORDANCE WITH DETAIL F, SHEET CG503.

A ROADWAY CROSS SECTION

NOT TO SCALE

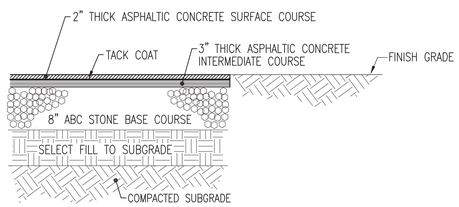

HEAVY DUTY PAVEMENT SECTION

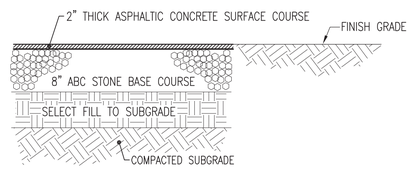

STANDARD DUTY PAVEMENT SECTION

B ASPHALT SECTION

NOT TO SCALE

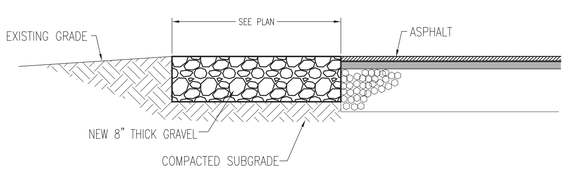

C GRAVEL SECTION

NOT TO SCALE

AVOLIS ENGINEERING, P.A.
P.O. BOX 15564
NEW BERN, NC 28561
PH. (252) 633-0068
kevin@avoliseng.com
LICENSE NO. C-0706
A/E PROJECT #23020

WALKER the GROUP ARCHITECTURE incorporated
PO BOX 541, NEW BERN, NC 28563
2526366778

Digitally signed by John K. Avolis
NORTH CAROLINA PROFESSIONAL SEAL 15738 ENGINEER JOHN K. AVOLIS
JULY 28, 2025

PUBLIC SAFETY TRAINING CENTER

525 Executive Pkwy
New Bern, NC 28562

BID DOCUMENTS

SCO # 24-27879-01A

No.	Date	Revisions

Project Number

Date **7-28-2025**

Drawn **MSP**

Checked **JKA**

Scale **AS NOTED**

Drawing Title

DETAILS

Sheet Number **71** of **158**

Drawing Number

CS501

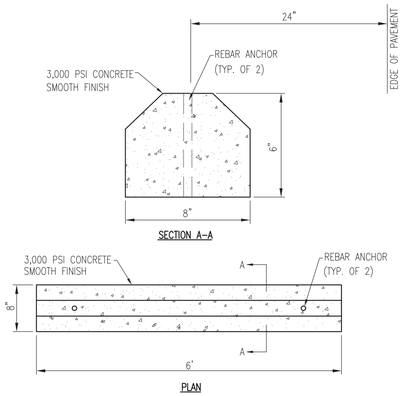

A CONCRETE WHEEL STOP

NOT TO SCALE

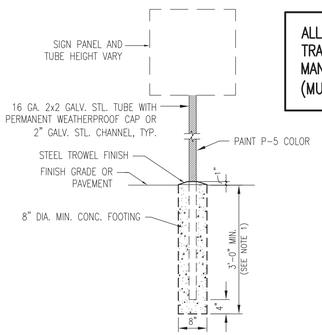

SIGN MOUNTING

ALL SIGNAGE TO CONFORM TO US DEPARTMENT OF TRANSPORTATION FEDERAL HIGHWAY ADMINISTRATION MANUAL ON UNIFORM TRAFFIC CONTROL DEVICES (MUTCD), 2009 EDITION (OR CURRENT IF NEWER).

PAVEMENT MARKING

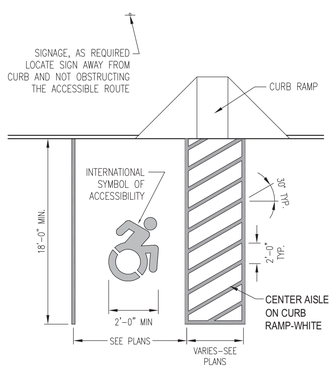

HANDICAP SPACE DESIGNATION

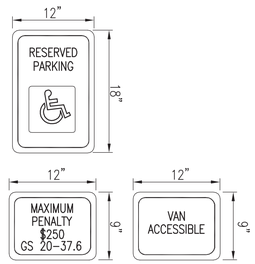

NOTES:

1. COLORS
   BACKGROUND: WHITE
   LEGEND AND BORDER: GREEN
   WHITE SYMBOL ON BLUE BACKGROUND
2. MOUNT THE SIGN 60" ABOVE GRADE.

TYPE A – HANDICAP PARKING SIGNAGE

B ACCESSIBLE MARKINGS AND SIGNAGE

NOT TO SCALE

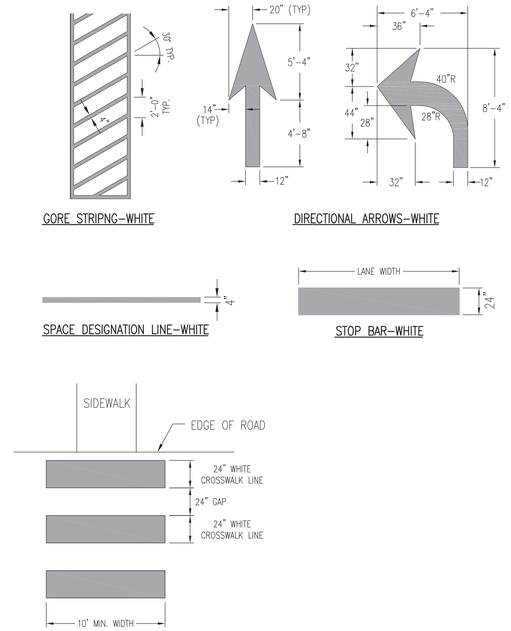

C PAVEMENT MARKINGS

NOT TO SCALE

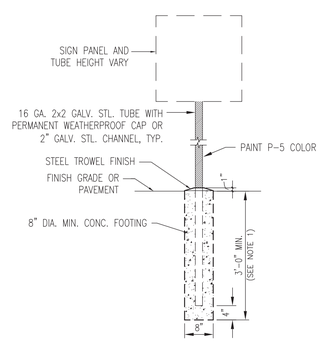

SIGN MOUNTING

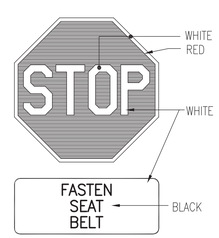

R1–1 STOP SIGN

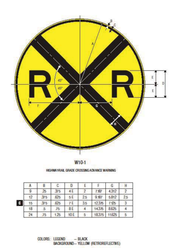

W10–1 ADVANCED WARNING SIGN

R15–1 RAILROAD CROSSING SIGN

ALL SIGNAGE TO CONFORM TO US DEPARTMENT OF TRANSPORTATION FEDERAL HIGHWAY ADMINISTRATION MANUAL ON UNIFORM TRAFFIC CONTROL DEVICES (MUTCD), 2009 EDITION.

D SIGNAGE

NOT TO SCALE

AVOLIS ENGINEERING, P.A.
P.O. BOX 15564
NEW BERN, NC 28561
PH. (252) 633-0068
kevin@avoliseng.com
LICENSE NO. C-0706
A/E PROJECT #23020

WALKER the GROUP ARCHITECTURE incorporated
PO BOX 541, NEW BERN, NC 28563
2526366778

Digitally signed by John K. Avolis
NORTH CAROLINA PROFESSIONAL SEAL 15738 ENGINEER JOHN K. AVOLIS
JULY 28, 2025

PUBLIC SAFETY TRAINING CENTER

525 Executive Pkwy
New Bern, NC 28562

BID DOCUMENTS

SCO # 24-27879-01A

No.	Date	Revisions

Project Number

Date **7-28-2025**

Drawn **MSP**

Checked **JKA**

Scale **AS NOTED**

Drawing Title

DETAILS

Sheet Number **72** of **158**

Drawing Number

CS502

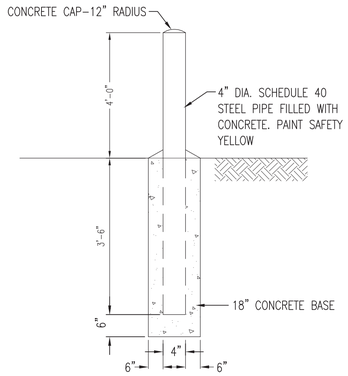

A STEEL BOLLARD

NOT TO SCALE

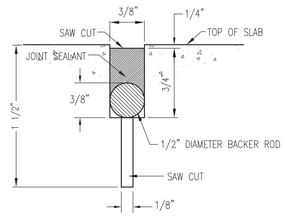

TYPICAL SLAB–ON–GRADE JOINT (CJ)

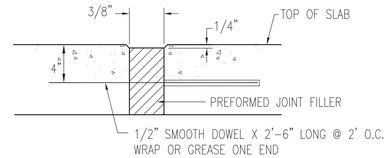

EXPANSION JOINT (EJ)

LEGEND:
CJ=CONTRACTION JOINT
EJ=EXPANSION JOINT

D SLAB-ON-GRADE JOINTS

NOT TO SCALE

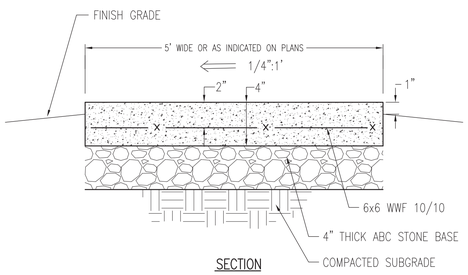

SECTION

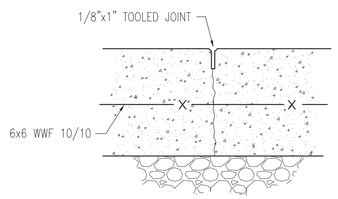

CONTRACTION JOINT (CJ)

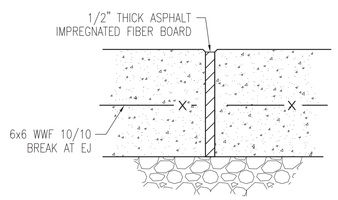

EXPANSION JOINT (EJ)

NOTES:

1. PROVIDE EXPANSION JOINTS ALONG ALL EXISTING STRUCTURES AND WALKS AND AT 20' INTERVALS ALONG STRAIGHT SECTIONS OF WALK.
2. PROVIDE TOOLED CONTRACTION JOINTS AT 6'–0" INTERVALS AND AT ALL CHANGES IN DIRECTION OF WALK. TOOLED CONTRACTION JOINTS MUST BE 1/8" WIDE X 1" DEEP.
3. SUBGRADE MUST BE WETTED IMMEDIATELY PRIOR TO PLACING CONCRETE, OR PROVIDE POLYETHYLENE SHEETING ON GROUND SURFACE BELOW CONCRETE.
4. PROVIDE FLOATED SURFACE WITH LIGHT BROOM FINISH.
5. PROTECT WORK IN PLACE FROM VANDALISM, GRAFFITI, ETC... UNTIL CONCRETE IS SUFFICIENTLY DRY.

B CONCRETE SIDEWALK

NOT TO SCALE

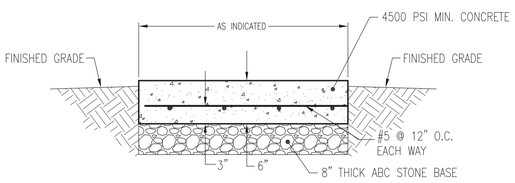

CJ = CONTRACTION JOINT, SEE DETAIL D, THIS SHEET.
EJ = EXPANSION JOINT, SEE DETAIL D, THIS SHEET.

C CONCRETE APRON

SCALE: NTS

WALKER the GROUP ARCHITECTURE incorporated
PO BOX 541, NEW BERN, NC 28563
2526366778

Digitally signed by John K. Avolis
NORTH CAROLINA PROFESSIONAL SEAL 15738 ENGINEER JOHN K. AVOLIS
JULY 28, 2025

PUBLIC SAFETY TRAINING CENTER

525 Executive Pkwy
New Bern, NC 28562

BID DOCUMENTS

SCO # 24-27879-01A

No.	Date	Revisions

Project Number

Date **7-28-2025**

Drawn **MSP**

Checked **JKA**

Scale **AS NOTED**

Drawing Title

DETAILS

Sheet Number **73** of **158**

Drawing Number

CS503

LICENSE NO. C-0706
A/E PROJECT #23020
AVOLIS ENGINEERING, P.A.
P.O. BOX 15564
NEW BERN, NC 28561
PH. (252) 633-0068
kevin@avoliseng.com

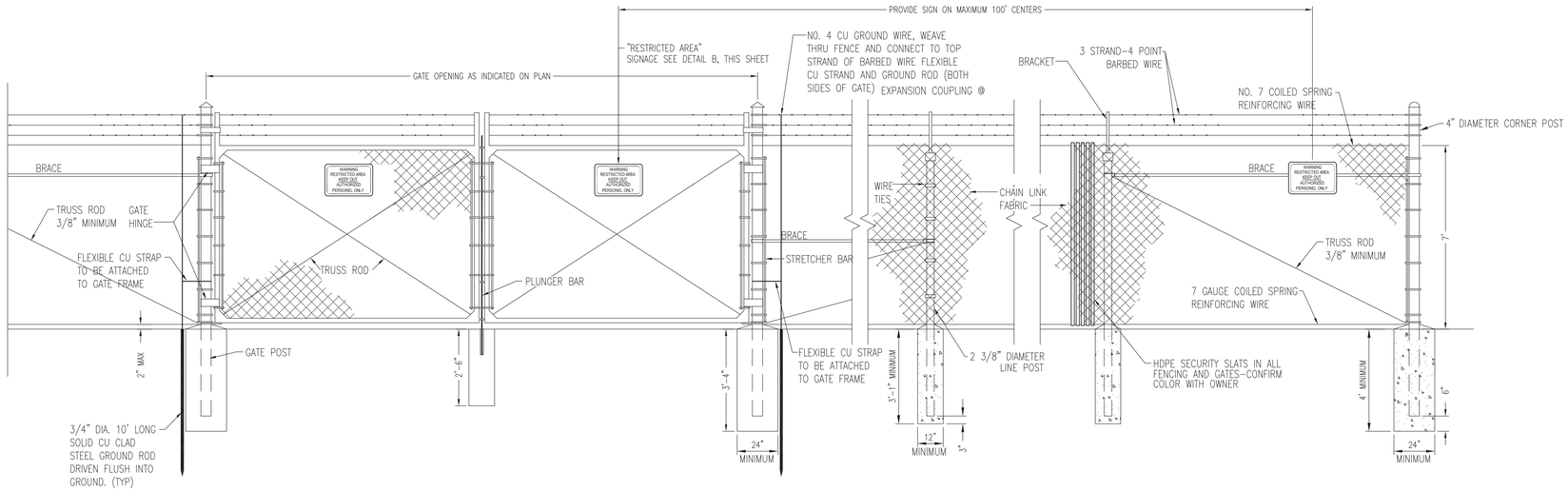

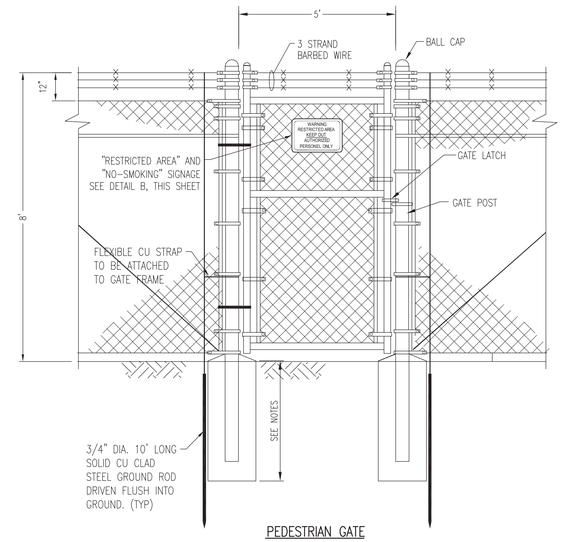

PEDESTRIAN GATE

FENCE NOTES:

1. CONCRETE FOOTINGS AT CORNER, LINE AND GATE POSTS SHALL BE SIZED TO WITHSTAND LATERAL WIND LOADS ON THE FENCE SYSTEM. PROVIDE FOOTING DIMENSIONS AND SUPPORTING CALCULATIONS AS A PART OF THE SUBMITTAL PACKAGE.
2. ALL FENCE SEGMENTS SHALL HAVE AT LEAST ONE GROUNDING POINT. GROUNDING POINTS SHALL NOT EXCEED 1,000 FOOT SPACING.
3. GATES SHALL HAVE HEAVY DUTY HINGES AND LOCKING DEVICES.
4. ALL HINGES FASTENERS SHALL BE WELDED OR PEENED TO PREVENT REMOVAL.
5. CAP TOPS SHALL HAVE SET SCREWS OR RIVETS TO PREVENT REMOVAL.
6. ALL GALVANIZED AREAS DISTURBED DURING INSTALLATION SHALL BE CLEANED AND PRIMED WITH (2) COATS OF POWDERED ZINC PRIMER. ZINC-RICH COMPOUND FOR REPAIRS SHALL BE 95% METALLIC ZINC, BY WEIGHT IN DRIED FILM; INSTALL AT LEAST TWO COATS, 4 MILS MIN. TOTAL THICKNESS.

A SECURITY CHAIN LINK FENCE

NOT TO SCALE

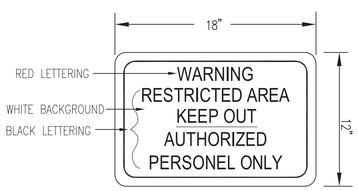

RESTRICTED AREA SIGNAGE

NOTES:

1. MOUNT SIGN ON FENCE ON EACH FACE OF FENCE AND ON EACH GATE LEAF, ALL FACING TO THE UNPROTECTED SIDE OF THE FENCE.
2. MOUNT BOTOM OF SIGN AT 60" ABOVE FINISH GRADE.
3. MOUNT SIGN VISIBLE FROM AN OUTSIDE-IN APPROACH.
4. SIGN BOARD SHALL BE ALUMINUM.

SIGN MOUNTING BRACKET

B SIGNAGE

NOT TO SCALE

AVOLIS ENGINEERING, P.A.
P.O. BOX 15564
NEW BERN, NC 28561
PH. (252) 633-0068
kevin@avoliseng.com
LICENSE NO. C-0706
A/E PROJECT #23020

WALKER the GROUP ARCHITECTURE incorporated
PO BOX 541, NEW BERN, NC 28563
2526366778

Digitally signed by Kevin K. Avolis
NORTH CAROLINA PROFESSIONAL SEAL 15738 ENGINEER KEVIN K. AVOLIS
JULY 28, 2025

PUBLIC SAFETY TRAINING CENTER

525 Executive Pkwy
New Bern, NC 28562

BID DOCUMENTS

SCO # 24-27879-01A

No.	Date	Revisions

Project Number

Date **7-28-2025**

Drawn **MSP**

Checked **JKA**

Scale **AS NOTED**

Drawing Title

DETAILS

Sheet Number **74** of **158**

Drawing Number

CS504

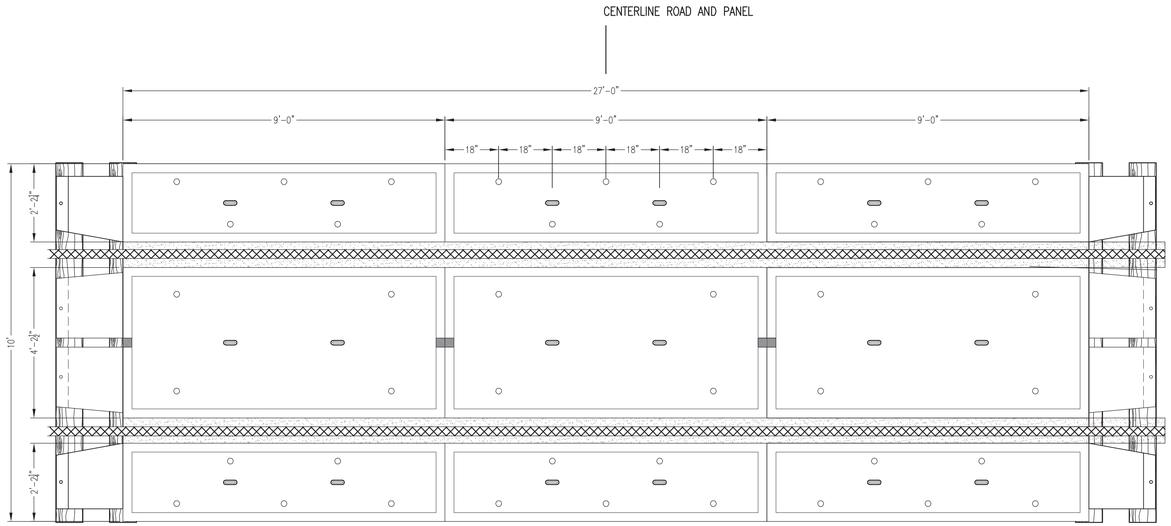

PLAN VIEW

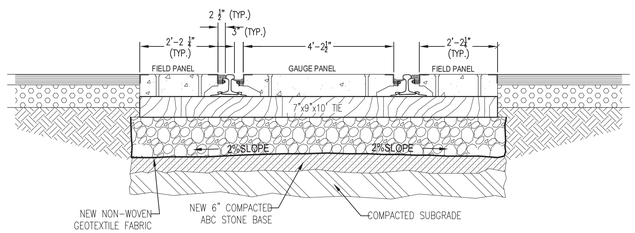

SECTION

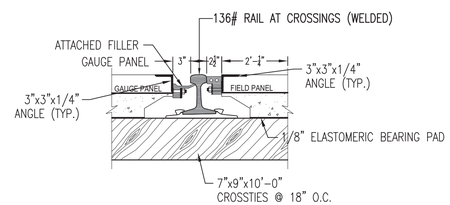

SECTION

W10-1 ADVANCED WARNING SIGN

R15-1 RAILROAD CROSSING SIGN

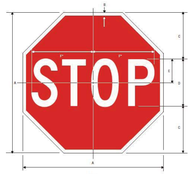

R1-1 STOP SIGN

CROSSING SIGNAGE

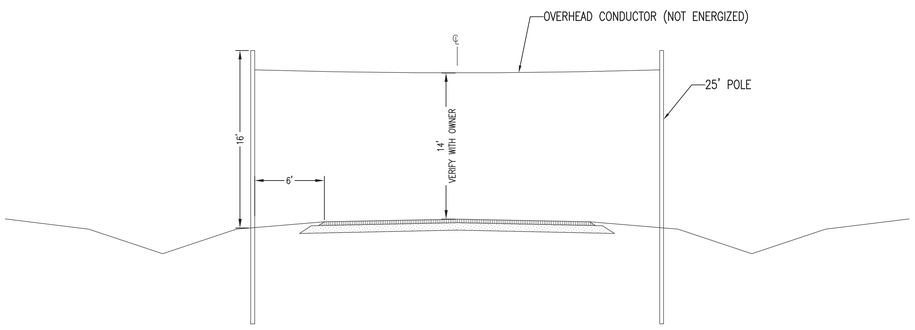

A SIMULATED RAILROAD CROSSING

NOT TO SCALE

WALKER the GROUP ARCHITECTURE incorporated
PO BOX 541, NEW BERN, NC 28563
2526366778

Digitally signed by John K. Avolis
NORTH CAROLINA PROFESSIONAL SEAL 15738 ENGINEER JOHN K. AVOLIS
JULY 28, 2025

PUBLIC SAFETY TRAINING CENTER

525 Executive Pkwy
New Bern, NC 28562

BID DOCUMENTS

SCO # 24-27879-01A

No.	Date	Revisions

Project Number

Date **7-28-2025**

Drawn **MSP**

Checked **JKA**

Scale **AS NOTED**

Drawing Title

DETAILS

Sheet Number **75** of **158**

Drawing Number

CS505

LICENSE NO. C-0706
A/E PROJECT #23020
AVOLIS ENGINEERING, P.A.
P.O. BOX 15564
NEW BERN, NC 28561
PH. (252) 633-0068
kevin@avoliseng.com

EROSION AND SEDIMENT CONTROL NOTES

1. UNLESS OTHERWISE INDICATED, ALL VEGETATIVE AND STRUCTURAL EROSION AND SEDIMENT CONTROL PRACTICES WILL BE CONSTRUCTED AND MAINTAINED ACCORDING TO MINIMUM STANDARDS AND SPECIFICATIONS OF THE NORTH CAROLINA EROSION AND SEDIMENT CONTROL PLANNING DESIGN MANUAL (REVISED JUNE 2013).
2. THE CONTRACTOR SHALL APPLY PERMANENT OR TEMPORARY SOIL STABILIZATION TO ALL DENUDED OR DISTURBED AREAS WITHIN 7 DAYS AFTER FINAL GRADE IS REACHED ON ANY PORTION OF THE SITE. SOIL STABILIZATION MUST ALSO BE APPLIED TO DENUDED OR DISTURBED AREAS WHICH MAY NOT BE AT FINAL GRADE BUT WHICH WILL REMAIN UNDISTURBED FOR LONGER THAN 30 DAYS. SOIL STABILIZATION MEASURES INCLUDE VEGETATIVE ESTABLISHMENT, MULCHING AND THE EARLY APPLICATION OF GRAVEL BASE MATERIAL ON AREAS TO BE PAVED.
3. ALL EROSION AND SEDIMENT CONTROL MEASURES ARE TO BE INSTALLED PRIOR TO OR AS THE FIRST STEP IN CONSTRUCTION.
4. THE NPDES CONSTRUCTION PERMIT REQUIRES EROSION CONTROL DEVICES AND STORM OUTFALLS BE INSPECTED WEEKLY (EVERY 7 CALENDAR DAYS) AND WITHIN 24 HOURS OF A 0.5 INCH RAIN EVENT. IT WILL BE THE RESPONSIBILITY OF THE CONTRACTOR TO CONDUCT THESE INSPECTIONS AND MAINTAIN RECORDS UNTIL THE AREA HAS STABILIZATION, EVIDENT BY 95% VEGETATIVE GROWTH FOR AREAS PROVIDED SEEDING. TO FACILITATE RAINFALL MONITORING A RAIN GAUGE IS REQUIRED TO BE ON SITE. ONCE STABILIZATION HAS BEEN ACCOMPLISHED INSPECTION RECORDS ARE TO BE FORWARDED TO THE OWNER AND ALL TEMPORARY EROSION/SEDIMENTATION CONTROL DEVICES REMOVED. THE CONTRACTOR IS RESPONSIBLE FOR MAINTAINING COMPLIANCE WITH ALL PERMITS AND PLANS, ANY CHANGES MUST BE APPROVED BY THE STATE PRIOR TO EXECUTION. A COPY OF THE EROSION AND SEDIMENTATION CONTROL PLAN, LETTER OF APPROVAL, AND NPDES CONSTRUCTION PERMIT MUST BE MAINTAINED BY THE CONTRACTOR AT THE ONSITE OFFICE.
5. THE CONTRACTOR SHALL LIMIT SITE ACCESS BY CONSTRUCTION VEHICLES TO ENTRANCES PROTECTED BY A STONE CONSTRUCTION ENTRANCE. SEDIMENT SHALL BE REMOVED FROM PAVED AREAS ON A DAILY BASIS.
6. STOCKPILES OF SOIL AND OTHER ERODIBLE MATERIALS SHALL BE STABILIZED OR PROTECTED WITH SEDIMENT TRAPPING MEASURES. THE CONTRACTOR IS RESPONSIBLE FOR THE TEMPORARY PROTECTION AND PERMANENT STABILIZATION FOR STOCKPILES ON SITE AS WELL AS FOR MATERIALS TRANSPORTED FROM THE PROJECT SITE.
7. THE CONTRACTOR SHALL MONITOR AND TAKE PRECAUTIONS TO CONTROL DUST INCLUDING (BUT NOT LIMITED TO) USE OF WATER, MULCH, OR CHEMICAL DUST ADHESIVES AND CONTROL OF CONSTRUCTION SITE TRAFFIC.
8. FILTER EFFLUENT FROM DE-WATERING OPERATIONS THROUGH AN APPROVED SEDIMENT TRAPPING DEVICE. IF DEWATERING IS REQUIRED, DISPOSE DEWATERING EFFLUENT WITHOUT DISCHARGE TO WATERS OF THE STATE OF NORTH CAROLINA (E.G. STORM DRAIN SYSTEMS, DRAINAGE SWALES, ETC). THE DEWATERING EFFLUENT WILL NOT BE ALLOWED TO POND, EXCEPT IN AREAS APPROVED BY THE CONSTRUCTION MANAGER. THE DEWATERING EFFLUENT SHALL NOT CONTAIN RAW SEWAGE FROM THE SEWAGE SYSTEM, DISCHARGE OF DEWATERING EFFLUENT INTO THE SANITARY SEWER SYSTEM IS NOT ALLOWED.
9. THE CONTRACTOR IS RESPONSIBLE FOR INSTALLATION AND MAINTENANCE OF ANY ADDITIONAL CONTROL MEASURES NECESSARY TO PREVENT EROSION AND SEDIMENTATION AS DETERMINED NECESSARY BY THE PLAN APPROVING AUTHORITY.
10. TEMPORARY EROSION AND SEDIMENT CONTROL MEASURES ARE NOT TO BE REMOVED UNTIL ALL DISTURBED AREAS ARE STABILIZED. AFTER STABILIZATION IS COMPLETE. ALL MEASURES SHALL BE REMOVED WITHIN 30 DAYS. TRAPPED SEDIMENT SHALL BE SPREAD AND SEEDED.
11. ANY SEDIMENT THAT HAS BEEN TRANSPORTED BEYOND THE PROJECT LIMITS SHALL BE IMMEDIATELY REMOVED.
12. OBTAIN BORROW MATERIALS REQUIRED IN EXCESS OF THOSE FURNISHED FROM EXCAVATIONS FROM SOURCES OUTSIDE OF PROPERTY.

A EROSION CONTROL NOTES
NOT TO SCALE

EROSION CONTROL SEQUENCE OF CONSTRUCTION

PRIOR TO STARTING SITE WORK:

1. INSTALL PROJECT SIGNBOARD INCLUDING COPIES OF PERMIT DOCUMENTS, RAIN GAUGE. NOTIFY NCDEMLR IN WRITING OF ANTICIPATED START DATE.
2. CONDUCT PRE-CONSTRUCTION CONFERENCE. REVIEW AL PERMITS AND PERMIT CONDITIONS.
3. INSPECT ALL EROSION AND SEDIMENT CONTROL PRACTICES WEEKLY AND WITHIN 24 HOURS OF A 0.5 INCH-MEASURED RAINFALL EVENT. A RAIN GAUGE SHALL BE INSTALLED TO MEASURE RAINFALL EVENTS. REPAIR ANY DAMAGE IMMEDIATELY TO EROSION AND SEDIMENT CONTROL MEASURES.
4. INSPECT AND INSTALL ALL EROSION AND SEDIMENT CONTROL MEASURES IN ACCORDANCE WITH NCDEQ'S NEW SELF INSPECTION PROGRAM FOR EROSION AND SEDIMENTATION CONTROL. COPIES OF THE SELF INSPECTION REPORTS SHALL BE PROVIDED TO THE ROICC'S OFFICE.

PRIOR TO STARTING CLEARING AND GRUBBING AND DEMOLITION:

1. INSTALL MAIN ENTRANCE DRIVEWAY CULVERTS AND TEMPORARY CONSTRUCTION ENTRANCES.
2. INSTALL SILT FENCING, CHECK DAMS AND INLET/OUTLET PROTECTION AS INDICATED ON THE PROJECT PLANS FOR EXISTING DRAINAGE FEATURES.

CLEARING, GRUBBING AND DEMOLITION:

1. CLEAR AND GRUB THE PORTIONS OF THE SITE NEEDED TO CONSTRUCT THE STORMWATER PONDS AND POND OUTLETS.
2. CONSTRUCT STORMWATER RETENTION PONDS TO ACT AS SEDIMENT BASINS DURING CONSTRUCTION. INSTALL OUTLET STRUCTURES, OUTLET PIPES, SKIMMER DEVICES, TURBIDITY CURTAINS. ESTABLISH TEMPORARY VEGETATION ON ALL SLOPE AREAS.
3. CONSTRUCT DIVERSION DITCHING AS SHOWN ON THE PROJECT PLANS.
4. COMPLETE CLEARING AND GRUBBING OF PROJECT SITE WITHIN THE LIMITS OF DISTURBANCE.

SITE DEVELOPMENT:

1. ESTABLISH CONCRETE WASHOUT AREA AND STOCKPILE AREAS INCLUDING SILT FENCING AS INDICATED ON THE PLANS.
2. CONSTRUCT PERMANENT CHANNELS AND DRAINAGE FEATURES TO DIRECT STORMWATER RUNOFF TO THE STORMWATER RETENTION PONDS. INSTALL EROSION CONTROL DEVICES SUCH AS CHECK DAMS, SILT FENCING, DROP INLET PROTECTION, AND INLET/OUTLET PROTECTION IMMEDIATELY AFTER THE DRAINAGE FEATURE IS CONSTRUCTED.
3. PROVIDE TEMPORARY VEGETATIVE COVER ON ALL GRADED AREAS WITHIN THE TIME FRAMES SPECIFIED.
4. ROUGH GRADE SITE.
5. CONSTRUCT BUILDING PADS. FINISH SLOPES AROUND BUILDINGS UPON COMPLETION OF ROUGH GRADING. LEAVE SLIGHTLY ROUGH. PROVIDE TEMPORARY VEGETATIVE COVER ON ALL GRADED AREAS WITHIN THE TIME FRAMES SPECIFIED IF BUILDING CONSTRUCTION IS NOT STARTED IMMEDIATELY.
6. COMPLETE FINAL GRADING FOR PARKING AREAS AND ROADWAYS AND STABILIZE WITH GRAVEL SURFACING ONCE SUBGRADE CONDITIONS HAVE BEEN APPROVED.
7. INSTALL ALL UNDERGROUND UTILITIES AS INDICATED.
8. INSTALL PAVEMENT AND SIDEWALK SURFACES.
9. COMPLETE FINAL SITE GRADING.

PROJECT COMPLETION:

1. COMPLETE FINAL GRADING OF THE PROJECT SITE.
2. AFTER SITE IS STABILIZED AND THE VEGETATION IS ESTABLISHED, REMOVE ALL TEMPORARY EROSION CONTROL DEVICES INCLUDING SILT FENCING, CHECK DAMS, DROP INLET PROTECTION.
3. REMOVE ALL ACCUMULATED SEDIMENT FROM THE STORMWATER RETENTION PONDS AND RETURN TO THE DESIGN DEPTHS AND GRADES SPECIFIED. REMOVE ALL SKIMMER DEVICES.

TEMPORARY SEEDING SCHEDULE

NOTE:
TEMPORARY SEED MIX SHALL BE USED FOR ALL AREAS EXPOSED GREATER THAN 15 WORKING DAYS AND SUBJECT TO FURTHER DISTURBANCE. AN ADEQUATE COVER SHALL HAVE 50 SPRIGS OF BERMUDA OR SERICEA LESPEDEZA PER ONE SQUARE FOOT.

TEMPORARY SEEDING AND MULCHING:
THE KINDS OF SEED AND FERTILIZER, AND THE RATES OF APPLICATION OF SEED, FERTILIZER, AND LIMESTONE, SHALL BE AS STATED BELOW. DURING PERIODS OF OVERLAPPING DATES, THE KINDS OF SEED TO BE USED SHALL BE DETERMINED BY THE ENGINEER. ALL ARE IN POUNDS PER ACRE (KILOGRAMS PER HECTARE).

TEMPORARY SUMMER SEED MIX

	SPECIES	RATE (LB. /ACRE)
MARCH 1 – SEPT. 1	GERMAN MILLET	120

TEMPORARY WINTER SEED MIX

	SPECIES	RATE (LB. /ACRE)
SEPT. 1 – MARCH 1	WINTER RYE (GRAIN)	200
	KOBE LESPEDEZA	120

APPROVED TALL FESCUE CULTIVARS:

ADVENTURE	ADVENTURE II	AMIGO	ANTHEM
APACHE	APACHE II	ARID	AUSTIN
BROOKSTONE	BONANZA	BONANZA II	CHAPEL HILL
CHESAPEAKE	CHIEFTAIN	CORONADO	CROSSFIRE II
DEBUTANTE	DUSTER	FALCON	FALCON II
FINELAWN PETITE	FINELAWN	FINELAWN I	GENESIS
GRANDE	GUARDIAN	HOUNDOG	JAGUAR
JAGUAR III	KENTUCKY 31	KITTY HAWK	MONARCH
MONTAUK	MUSTANG	OLYMPIC	PACER
PHOENIX	PIXIE	PYRAMID	REBEL
REBEL JR.	REBEL II	RENEGADE	SAFARI
SHENANDOAH	TEMPO	TITAN	TOMAHAWK
TRAILBLAZER	TRIBUTE	VEGAS	WOLFPACK
WRANGLER			

FERTILIZER SHALL BE 10-20-20 ANALYSIS. UPON WRITTEN APPROVAL OF THE ENGINEER, A DIFFERENT ANALYSIS OF FERTILIZER MAY BE USED PROVIDED THE 1-2-2 RATIO IS MAINTAINED AND THE RATE OF APPLICATION ADJUSTED TO PROVIDE THE SAME AMOUNT OF PLANT FOOD AS 10-20-20 ANALYSIS.

TEMPORARY SEEDING:
FERTILIZER SHALL BE THE SAME ANALYSIS AS SPECIFIED FOR "SEEDING AND MULCHING" AND APPLIED AT THE RATE OF 400 POUNDS (450 KILOGRAMS) AND SEEDED AT THE RATE OF 50 POUNDS (55 kg) PER HECTARE. SWEET SUDAN GRASS, GERMAN MILLET OR BROWNTOP MILLET SHALL BE USED IN SUMMER MONTHS AND RYE GRAIN DURING THE REMAINDER OF THE YEAR. THE ENGINEER WILL DETERMINE THE EXACT DATES FOR USING EACH KIND OF SEED.

FERTILIZER TOPDRESSING:
FERTILIZER USED FOR TOPDRESSING ON ALL ROADWAY AREAS EXCEPT SLOPES 2:1 AND STEEPER SHALL BE 10-20-20. UPON WRITTEN APPROVAL OF THE ENGINEER, A DIFFERENT ANALYSIS OF FERTILIZER MAY BE USED PROVIDED GRADE AND SHALL BE APPLIED AT THE RATE OF APPLICATION ADJUSTED TO PROVIDE THE SAME AMOUNT OF PLANT FOOD AS 10-20-20 ANALYSIS.

FERTILIZER USED FOR TOPDRESSING ON SLOPES 2:1 AND STEEPER AND WASTE AND BORROW AREAS SHALL BE 16-8-8 GRADE AND SHALL BE APPLIED AT THE RATE OF 500 POUNDS PER ACRE (560 KG PER HECTARE). UPON WRITTEN APPROVAL OF THE ENGINEER, A DIFFERENT ANALYSIS OF FERTILIZER MAY BE USED PROVIDED THE 2-1-1 RATIO IS MAINTAINED AND THE RATE OF APPLICATION ADJUSTED TO PROVIDE THE SAME AMOUNT OF PLANT FOOD AS 16-8-8 ANALYSIS.

THE KINDS OF SEED AND PROPORTIONS SHALL BE THE SAME AS SPECIFIED FOR "TEMPORARY SEEDING AND MULCHING", WITH THE EXCEPTION THAT NO CENTIPEDE SEED WILL BE USED IN THE SEED MIX FOR SUPPLEMENTAL SEEDING. THE RATE OF APPLICATION FOR SUPPLEMENTAL SEEDING MAY VARY FROM 25# TO 75# PER ACRE (28KG TO 85KG PER HECTARE). THE ACTUAL RATE PER ACRE (HECTARE) WILL BE DETERMINED BY THE ENGINEER PRIOR TO THE TIME OF TOPDRESSING AND THE CONTRACTOR WILL BE NOTIFIED IN WRITING OF THE RATE PER ACRE (HECTARE), TOTAL QUANTITY NEEDED, AND AREAS ON WHICH TO APPLY THE SUPPLEMENTAL SEED. MINIMUM TILLAGE EQUIPMENT, CONSISTING OF SOD SEEDER SHALL BE USED FOR INCORPORATING SEED INTO THE SOIL AS TO PREVENT DISTURBANCE OF EXISTING VEGETATION. A CLODBUSTER (BALL AND CHAIN) MAY BE USED WHERE DEGREE OF SLOPE PREVENTS THE USE OF A SOD SEEDER.

MOWING:
THE MINIMUM MOWING HEIGHT ON THIS PROJECT SHALL BE 4 INCHES (100 MM).

CRIMPING STRAW MULCH:
CRIMPING SHALL BE REQUIRED ON THIS PROJECT FOR ALL SEEDING OPERATIONS PER NCDENR.

STRAW MULCH TO BE OF SUFFICIENT LENGTH AND QUALITY TO WITHSTAND THE CRIMPING OPERATION AND PROVIDE ADEQUATE GROUND COVER.

CRIMPING EQUIPMENT INCLUDING POWER SOURCE SHALL BE SUBJECT TO THE APPROVAL OF THE ENGINEER PROVIDING THAT MAXIMUM SPACING OF CRIMPER BLADES SHALL NOT EXCEED 8 INCHES (200 MM).

SOIL AMENDMENTS:
TO BE INCORPORATED INTO THE TOP 3 INCHES OF SOIL IN AREAS WITH SLOPES 2:1 OR FLATTER

- APPLY FERTILIZER (10-10-10) AT A RATE OF 1000 LB/ACRE
- APPLY LIME (GROUND AGRICULTURAL LIMESTONE) AT A RATE OF 4000 LB/ACRE
- APPLY SUPERPHOSPHATE (0-49-0) AT A RATE OF 200 LB/ACRE

MULCH:
APPLY 4,000 LB/ACRE GRAIN STRAW OR EQUIVALENT COVER. ANCHOR MULCH WITH ROVING, NETTING OR BY TACKING WITH ASPHALT EMULSION AT A RATE OF 400 GAL./ACRE

WATER:
MINIMUM OF 1" OF RAINFALL A WEEK (IF NOT SUPPLIED NATURALLY, CONTRACTOR SHALL SUPPLY THE REMAINING AMOUNT UNTIL GROUND COVER HAS BEEN ESTABLISHED).

MAINTENANCE:
REFERTILIZE IN THE SECOND YEAR UNLESS THE GROWTH IS FULLY ADEQUATE. MOW WHEN THE AVERAGE PLANT HEIGHT EXCEEDS 6 INCHES. RESEED, FERTILIZE AND MULCH DAMAGED AREAS IMMEDIATELY.

TEMPORARY SEED BED PREPARATION

1. RIP THE ENTIRE AREA TO 6" DEPTH.
2. REMOVE ALL LOOSE ROCK, ROOTS, AND OTHER OBSTRUCTIONS LEAVING SURFACE REASONABLY SMOOTH AND UNIFORM.
3. APPLY AGRICULTURAL LIME, FERTILIZER, AND SUPERPHOSPHATE IN ACCORDANCE WITH "SEEDING SCHEDULE" AND MIX WITH SOIL.
4. CONTINUE TILLAGE UNTIL A WELL -PULVERIZED, FIRM, REASONABLY UNIFORM SEEDBED IS PREPARED 4 TO 6 INCHES DEEP.
5. SEED ON A FRESHLY PREPARED SEEDBED AND COVER SEED LIGHTLY WITH SEEDING EQUIPMENT OR CULTIPACK AFTER SEEDING. SEED ACCORDING TO "SEEDING SCHEDULE."
6. MULCH IN ACCORDANCE WITH "SEEDING SCHEDULE" IMMEDIATELY AFTER SEEDING.
7. INSPECT ALL SEEDING FOR COMPLIANCE WITH THE REQUIREMENTS OF THE "SEEDING SCHEDULE". MAKE NECESSARY REPAIRS AND RESEED WITHIN THE PLANTING SEASON, IF POSSIBLE, OR THE DAMAGED AREA SHALL BE REESTABLISHED FOLLOWING THE ORIGINAL LIME, FERTILIZER, AND SEEDING REQUIREMENTS.

PERMANENT GROUND COVER

PROVIDE CENTIPEDE SOD FOR ALL DENUDED AREAS. SEED SHALL ONLY BE UTILIZED AS A TEMPORARY RESTRAINING MEASURE. ALL DENUDED AREAS SHALL BE ESTABLISHED WITH CENTIPEDE SOD.

GROUND COVER NOTE

PURSUANT TO G.S. 133-A57(2), THE ANGLE FOR GRADED SLOPES AND FILLS SHALL BE NO GREATER THAN THE ANGLE THAT CAN BE RETAINED BY VEGETATIVE COVER OR OTHER ADEQUATE EROSION-CONTROL DEVICES OR STRUCTURES. IN ANY EVENT, SLOPES LEFT EXPOSED WILL BE PLANTED OR OTHERWISE PROVIDED WITH TEMPORARY OR PERMANENT GROUND COVER, DEVICES, OR STRUCTURES SUFFICIENT TO RESTRAIN EROSION.
PURSUANT TO G.S. 113A-57(3), PROVISIONS FOR PERMANENT GROUNDCOVER SUFFICIENT TO RESTRAIN EROSION MUST BE ACCOMPLISHED FOR ALL DISTURBED AREAS (AS SHOWN BELOW) FOLLOWING COMPLETION OF CONSTRUCTION OR DEVELOPMENT.

GROUND STABILIZATION

THE NPDES PERMIT (SECTION II. 8.2) HAS RECENTLY REVISED THE REQUIREMENTS FOR GROUND STABILIZATION. STABILIZATION SHALL BE ACCOMPLISHED AS FOLLOWS:

PERIMETER DIKES, SWALES, DITCHES AND SLOPES	WITHIN 7 DAYS
HIGH QUALITY WATER (HQW) ZONES	WITHIN 7 DAYS
SLOPES STEEPER THAN 3:1	WITHIN 7 DAYS
SLOPES 3:1 OR FLATTER	WITHIN 14 DAYS
ALL OTHER AREAS W/ SLOPES FLATTER THAN 4:1	WITHIN 14 DAYS

NOTE:
ALL FILL MATERIAL NEEDED TO EXECUTE THIS PROJECT MUST BE OBTAINED FROM AN NCDEQ NCDEMLR PERMITTED BORROW PIT.

NOTE:
WETLANDS EXIST ON THE SUBJECT PROPERTY AS SHOWN. NO STREAM BUFFER AREAS EXIST ON THE SUBJECT PROPERTY.

WETALAND AREAS SHALL NOT BE DISTURBED IN ANY MANNER WITHOUT THE EXPRESS APPROVAL OF THE US ARMY CORPS OF ENGINEERS AND THE STATE OF NORTH CAROLINA.

NOTE:
THE PROJECT DRAINS TO DEEP BRANCH
SURFACE WATER CLASSIFICATION: C, Sw, NSW
STREAM INDEX: 27-98-2.1

AVOLIS ENGINEERING, P.A.
P.O. BOX 15564
NEW BERN, NC 28561
PH. (252) 633-0068
kevin@avoliseng.com
LICENSE NO. C-0706
A/E PROJECT #23020

WALKER the GROUP ARCHITECTURE incorporated
PO BOX 541, NEW BERN, NC 28563
2526366778

Digitally signed by John K Avolis
NORTH CAROLINA PROFESSIONAL SEAL 15738 ENGINEER JOHN K AVOLIS
JULY 28, 2025

PUBLIC SAFETY TRAINING CENTER

525 Executive Pkwy
New Bern, NC 28562

BID DOCUMENTS

SCO # 24-27879-01A

No.	Date	Revisons

Project Number

Date **7-28-2025**

Drawn **MSP**

Checked **JKA**

Scale **AS NOTED**

Drawing Title

DETAILS

Sheet Number **76** of **158**

Drawing Number

CG501

GROUND STABILIZATION AND MATERIALS HANDLING PRACTICES FOR COMPLIANCE WITH THE NCG01 CONSTRUCTION GENERAL PERMIT

Implementing the details and specifications on this plan sheet will result in the construction activity being considered compliant with the Ground Stabilization and Materials Handling sections of the NCG01 Construction General Permit (Sections E and F, respectively). The permittee shall comply with the Erosion and Sediment Control plan approved by the delegated authority having jurisdiction. All details and specifications shown on this sheet may not apply depending on site conditions and the delegated authority having jurisdiction.

SECTION E: GROUND STABILIZATION

	Site Area Description	Required Ground Stabilization Timeframes: Stabilize within this many calendar days after ceasing land disturbance	Timeframe variations
(a)	Perimeter dikes, swales, ditches, and perimeter slopes	7	None
(b)	High Quality Water (HQW) Zones	7	None
(c)	Slopes steeper than 3:1	7	If slopes are 10' or less in length and are not steeper than 2:1, 14 days are allowed
(d)	Slopes 3:1 to 4:1	14	-7 days for slopes greater than 50' in length and with slopes steeper than 4:1 -7 days for perimeter dikes, swales, ditches, perimeter slopes and HQW Zones -10 days for Falls Lake Watershed
(e)	Areas with slopes flatter than 4:1	14	-7 days for perimeter dikes, swales, ditches, perimeter slopes and HQW Zones -10 days for Falls Lake Watershed unless there is zero slope

Note: After the permanent cessation of construction activities, any areas with temporary ground stabilization shall be converted to permanent ground stabilization as soon as practicable but in no case longer than 90 calendar days after the last land disturbing activity. Temporary ground stabilization shall be maintained in a manner to render the surface stable against accelerated erosion until permanent ground stabilization is achieved.

GROUND STABILIZATION SPECIFICATION

Stabilize the ground sufficiently so that rain will not dislodge the soil. Use one of the techniques in the table below:

Temporary Stabilization	Permanent Stabilization
• Temporary grass seed covered with straw or other mulches and tackifiers • Hydroseeding • Rolled erosion control products with or without temporary grass seed • Appropriately applied straw or other mulch • Plastic sheeting	• Permanent grass seed covered with straw or other mulches and tackifiers • Geotextile fabrics such as permanent soil reinforcement matting • Hydroseeding • Shrubs or other permanent plantings covered with mulch • Uniform and evenly distributed ground cover sufficient to restrain erosion • Structural methods such as concrete, asphalt or retaining walls • Rolled erosion control products with grass seed

POLYACRYLAMIDES (PAMS) AND FLOCCULANTS

1. Select flocculants that are appropriate for the soils being exposed during construction, selecting from the *NC DWR List of Approved PAMS/Flocculants.*
2. Apply flocculants at or before the inlets to Erosion and Sediment Control Measures.
3. Apply flocculants at the concentrations specified in the *NC DWR List of Approved PAMS/Flocculants* and in accordance with the manufacturer's instructions.
4. Provide ponding area for containment of treated Stormwater before discharging offsite.
5. Store flocculants in leak-proof containers that are kept under storm-resistant cover or surrounded by secondary containment structures.

EQUIPMENT AND VEHICLE MAINTENANCE

1. Maintain vehicles and equipment to prevent discharge of fluids.
2. Provide drip pans under any stored equipment.
3. Identify leaks and repair as soon as feasible, or remove leaking equipment from the project.
4. Collect all spent fluids, store in separate containers and properly dispose as hazardous waste (recycle when possible).
5. Remove leaking vehicles and construction equipment from service until the problem has been corrected.
6. Bring used fuels, lubricants, coolants, hydraulic fluids and other petroleum products to a recycling or disposal center that handles these materials.

LITTER, BUILDING MATERIAL AND LAND CLEARING WASTE

1. Never bury or burn waste. Place litter and debris in approved waste containers.
2. Provide a sufficient number and size of waste containers (e.g dumpster, trash receptacle) on site to contain construction and domestic wastes.
3. Locate waste containers at least 50 feet away from storm drain inlets and surface waters unless no other alternatives are reasonably available.
4. Locate waste containers on areas that do not receive substantial amounts of runoff from upland areas and does not drain directly to a storm drain, stream or wetland.
5. Cover waste containers at the end of each workday and before storm events or provide secondary containment. Repair or replace damaged waste containers.
6. Anchor all lightweight items in waste containers during times of high winds.
7. Empty waste containers as needed to prevent overflow. Clean up immediately if containers overflow.
8. Dispose waste off-site at an approved disposal facility.
9. On business days, clean up and dispose of waste in designated waste containers.

PAINT AND OTHER LIQUID WASTE

1. Do not dump paint and other liquid waste into storm drains, streams or wetlands.
2. Locate paint washouts at least 50 feet away from storm drain inlets and surface waters unless no other alternatives are reasonably available.
3. Contain liquid wastes in a controlled area.
4. Containment must be labeled, sized and placed appropriately for the needs of site.
5. Prevent the discharge of soaps, solvents, detergents and other liquid wastes from construction sites.

PORTABLE TOILETS

1. Install portable toilets on level ground, at least 50 feet away from storm drains, streams or wetlands unless there is no alternative reasonably available. If 50 foot offset is not attainable, provide relocation of portable toilet behind silt fence or place on a gravel pad and surround with sand bags.
2. Provide staking or anchoring of portable toilets during periods of high winds or in high foot traffic areas.
3. Monitor portable toilets for leaking and properly dispose of any leaked material. Utilize a licensed sanitary waste hauler to remove leaking portable toilets and replace with properly operating unit.

EARTHEN STOCKPILE MANAGEMENT

1. Show stockpile locations on plans. Locate earthen-material stockpile areas at least 50 feet away from storm drain inlets, sediment basins, perimeter sediment controls and surface waters unless it can be shown no other alternatives are reasonably available.
2. Protect stockpile with silt fence installed along toe of slope with a minimum offset of five feet from the toe of stockpile.
3. Provide stable stone access point when feasible.
4. Stabilize stockpile within the timeframes provided on this sheet and in accordance with the approved plan and any additional requirements. Soil stabilization is defined as vegetative, physical or chemical coverage techniques that will restrain accelerated erosion on disturbed soils for temporary or permanent control needs.

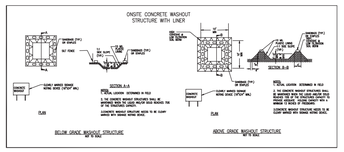

CONCRETE WASHOUTS

1. Do not discharge concrete or cement slurry from the site.
2. Dispose of, or recycle settled, hardened concrete residue in accordance with local and state solid waste regulations and at an approved facility.
3. Manage washout from mortar mixers in accordance with the above item and in addition place the mixer and associated materials on impervious barrier and within lot perimeter silt fence.
4. Install temporary concrete washouts per local requirements, where applicable. If an alternate method or product is to be used, contact your approval authority for review and approval. If local standard details are not available, use one of the two types of temporary concrete washouts provided on this detail.
5. Do not use concrete washouts for dewatering or storing defective curb or sidewalk sections. Stormwater accumulated within the washout may not be pumped into or discharged to the storm drain system or receiving surface waters. Liquid waste must be pumped out and removed from project.
6. Locate washouts at least 50 feet from storm drain inlets and surface waters unless it can be shown that no other alternatives are reasonably available. At a minimum, install protection of storm drain inlet(s) closest to the washout which could receive spills or overflow.
7. Locate washouts in an easily accessible area, on level ground and install a stone entrance pad in front of the washout. Additional controls may be required by the approving authority.
8. Install at least one sign directing concrete trucks to the washout within the project limits. Post signage on the washout itself to identify this location.
9. Remove leavings from the washout when at approximately 75% capacity to limit overflow events. Replace the tarp, sand bags or other temporary structural components when no longer functional. When utilizing alternative or proprietary products, follow manufacturer's instructions.
10. At the completion of the concrete work, remove remaining leavings and dispose of in an approved disposal facility. Fill pit, if applicable, and stabilize any disturbance caused by removal of washout.

HERBICIDES, PESTICIDES AND RODENTICIDES

1. Store and apply herbicides, pesticides and rodenticides in accordance with label restrictions.
2. Store herbicides, pesticides and rodenticides in their original containers with the label, which lists directions for use, ingredients and first aid steps in case of accidental poisoning.
3. Do not store herbicides, pesticides and rodenticides in areas where flooding is possible or where they may spill or leak into wells, stormwater drains, ground water or surface water. If a spill occurs, clean area immediately.
4. Do not stockpile these materials onsite.

HAZARDOUS AND TOXIC WASTE

1. Create designated hazardous waste collection areas on-site.
2. Place hazardous waste containers under cover or in secondary containment.
3. Do not store hazardous chemicals, drums or bagged materials directly on the ground.

NCG01 GROUND STABILIZATION AND MATERIALS HANDLING | EFFECTIVE: 04/01/19

PART III
SELF-INSPECTION, RECORDKEEPING AND REPORTING

SECTION A: SELF-INSPECTION

Self-inspections are required during normal business hours in accordance with the table below. When adverse weather or site conditions would cause the safety of the inspection personnel to be in jeopardy, the inspection may be delayed until the next business day on which it is safe to perform the inspection. In addition, when a storm event of equal to or greater than 1.0 inch occurs outside of normal business hours, the self-inspection shall be performed upon the commencement of the next business day. Any time when inspections were delayed shall be noted in the Inspection Record.

Inspect	Frequency (during normal business hours)	Inspection records must include:
(1) Rain gauge maintained in good working order	Daily	Daily rainfall amounts. If no daily rain gauge observations are made during weekend or holiday periods, and no individual-day rainfall information is available, record the cumulative rain measurement for those un-attended days (and this will determine if a site inspection is needed). Days on which no rainfall occurred shall be recorded as "zero." The permittee may use another rain-monitoring device approved by the Division.
(2) E&SC Measures	At least once per 7 calendar days and within 24 hours of a rain event ≥ 1.0 inch in 24 hours	1. Identification of the measures inspected, 2. Date and time of the inspection, 3. Name of the person performing the inspection, 4. Indication of whether the measures were operating properly, 5. Description of maintenance needs for the measure, 6. Description, evidence, and date of corrective actions taken.
(3) Stormwater discharge outfalls (SDOs)	At least once per 7 calendar days and within 24 hours of a rain event ≥ 1.0 inch in 24 hours	1. Identification of the discharge outfalls inspected, 2. Date and time of the inspection, 3. Name of the person performing the inspection, 4. Evidence of indicators of stormwater pollution such as oil sheen, floating or suspended solids or discoloration, 5. Indication of visible sediment leaving the site, 6. Description, evidence, and date of corrective actions taken.
(4) Perimeter of site	At least once per 7 calendar days and within 24 hours of a rain event ≥ 1.0 inch in 24 hours	If visible sedimentation is found outside site limits, then a record of the following shall be made: 1. Actions taken to clean up or stabilize the sediment that has left the site limits, 2. Description, evidence, and date of corrective actions taken, and 3. An explanation as to the actions taken to control future releases.
(5) Streams or wetlands onsite or offsite (where accessible)	At least once per 7 calendar days and within 24 hours of a rain event ≥ 1.0 inch in 24 hours	If the stream or wetland has increased visible sedimentation or a stream has visible increased turbidity from the construction activity, then a record of the following shall be made: 1. Description, evidence and date of corrective actions taken, and 2. Records of the required reports to the appropriate Division Regional Office per Part III, Section C, Item (2)(a) of this permit.
(6) Ground stabilization measures	After each phase of grading	1. The phase of grading (installation of perimeter E&SC measures, clearing and grubbing, installation of storm drainage facilities, completion of all land-disturbing activity, construction or redevelopment, permanent ground cover). 2. Documentation that the required ground stabilization measures have been provided within the required timeframe or an assurance that they will be provided as soon as possible.

NOTE: The rain inspection resets the required 7 calendar day inspection requirement.

PART III
SELF-INSPECTION, RECORDKEEPING AND REPORTING

SECTION B: RECORDKEEPING

1. E&SC Plan Documentation

The approved E&SC plan as well as any approved deviation shall be kept on the site. The approved E&SC plan must be kept up-to-date throughout the coverage under this permit. The following items pertaining to the E&SC plan shall be kept on site and available for inspection at all times during normal business hours.

Item to Document	Documentation Requirements
(a) Each E&SC measure has been installed and does not significantly deviate from the locations, dimensions and relative elevations shown on the approved E&SC plan.	Initial and date each E&SC measure on a copy of the approved E&SC plan or complete, date and sign an inspection report that lists each E&SC measure shown on the approved E&SC plan. This documentation is required upon the initial installation of the E&SC measures or if the E&SC measures are modified after initial installation.
(b) A phase of grading has been completed.	Initial and date a copy of the approved E&SC plan or complete, date and sign an inspection report to indicate completion of the construction phase.
(c) Ground cover is located and installed in accordance with the approved E&SC plan.	Initial and date a copy of the approved E&SC plan or complete, date and sign an inspection report to indicate compliance with approved ground cover specifications.
(d) The maintenance and repair requirements for all E&SC measures have been performed.	Complete, date and sign an inspection report.
(e) Corrective actions have been taken to E&SC measures.	Initial and date a copy of the approved E&SC plan or complete, date and sign an inspection report to indicate the completion of the corrective action.

In addition to the E&SC plan documents above, the following items shall be kept on the site and available for inspectors at all times during normal business hours, unless the Division provides a site-specific exemption based on unique site conditions that make this requirement not practical:

(a) This General Permit as well as the Certificate of Coverage, after it is received.

(b) Records of inspections made during the previous twelve months. The permittee shall record the required observations on the Inspection Record Form provided by the Division or a similar inspection form that includes all the required elements. Use of electronically-available records in lieu of the required paper copies will be allowed if shown to provide equal access and utility as the hard-copy records.

3. Documentation to be Retained for Three Years

All data used to complete the e-NOI and all inspection records shall be maintained for a period of three years after project completion and made available upon request. [40 CFR 122.41]

PART III
SELF-INSPECTION, RECORDKEEPING AND REPORTING

SECTION C: REPORTING

1. Occurrences that Must be Reported

Permittees shall report the following occurrences:

(a) Visible sediment deposition in a stream or wetland.

(b) Oil spills if:
- They are 25 gallons or more,
- They are less than 25 gallons but cannot be cleaned up within 24 hours,
- They cause sheen on surface waters (regardless of volume), or
- They are within 100 feet of surface waters (regardless of volume).

(c) Releases of hazardous substances in excess of reportable quantities under Section 311 of the Clean Water Act (Ref: 40 CFR 110.3 and 40 CFR 117.3) or Section 102 of CERCLA (Ref: 40 CFR 302.4) or G.S. 143-215.85.

(d) Anticipated bypasses and unanticipated bypasses.

(e) Noncompliance with the conditions of this permit that may endanger health or the environment.

2. Reporting Timeframes and Other Requirements

After a permittee becomes aware of an occurrence that must be reported, he shall contact the appropriate Division regional office within the timeframes and in accordance with the other requirements listed below. Occurrences outside normal business hours may also be reported to the Department's Environmental Emergency Center personnel at (800) 858-0368.

Occurrence	Reporting Timeframes (After Discovery) and Other Requirements
(a) Visible sediment deposition in a stream or wetland	• ***Within 24 hours***, an oral or electronic notification. • ***Within 7 calendar days***, a report that contains a description of the sediment and actions taken to address the cause of the deposition. Division staff may waive the requirement for a written report on a case-by-case basis. • If the stream is named on the NC 303(d) list as impaired for sediment-related causes, the permittee may be required to perform additional monitoring, inspections or apply more stringent practices if staff determine that additional requirements are needed to assure compliance with the federal or state impaired-waters conditions.
(b) Oil spills and release of hazardous substances per Item 1(b)-(c) above	• ***Within 24 hours***, an oral or electronic notification. The notification shall include information about the date, time, nature, volume and location of the spill or release.
(c) Anticipated bypasses [40 CFR 122.41(m)(3)]	• ***A report at least ten days before the date of the bypass, if possible***. The report shall include an evaluation of the anticipated quality and effect of the bypass.
(d) Unanticipated bypasses [40 CFR 122.41(m)(3)]	• ***Within 24 hours***, an oral or electronic notification. • ***Within 7 calendar days***, a report that includes an evaluation of the quality and effect of the bypass.
(e) Noncompliance with the conditions of this permit that may endanger health or the environment[40 CFR 122.41(l)(7)]	• ***Within 24 hours***, an oral or electronic notification. • ***Within 7 calendar days***, a report that contains a description of the noncompliance, and its causes; the period of noncompliance, including exact dates and times, and if the noncompliance has not been corrected, the anticipated time noncompliance is expected to continue; and steps taken or planned to reduce, eliminate, and prevent reoccurrence of the noncompliance. [40 CFR 122.41(l)(6). • Division staff may waive the requirement for a written report on a case-by-case basis.

PART II, SECTION G, ITEM (4)
DRAW DOWN OF SEDIMENT BASINS FOR MAINTENANCE OR CLOSE OUT

Sediment basins and traps that receive runoff from drainage areas of one acre or more shall use outlet structures that withdraw water from the surface when these devices need to be drawn down for maintenance or close out unless this is infeasible. The circumstances in which it is not feasible to withdraw water from the surface shall be rare (for example, times with extended cold weather). Non-surface withdrawals from sediment basins shall be allowed only when all of the following criteria have been met:

(a) The E&SC plan authority has been provided with documentation of the non-surface withdrawal and the specific time periods or conditions in which it will occur. The non-surface withdrawal shall not commence until the E&SC plan authority has approved these items,
(b) The non-surface withdrawal has been reported as an anticipated bypass in accordance with Part III, Section C, Item (2)(c) and (d) of this permit,
(c) Dewatering discharges are treated with controls to minimize discharges of pollutants from stormwater that is removed from the sediment basin. Examples of appropriate controls include properly sited, designed and maintained dewatering tanks, weir tanks, and filtration systems,
(d) Vegetated, upland areas of the sites or a properly designed stone pad is used to the extent feasible at the outlet of the dewatering treatment devices described in Item (c) above,
(e) Velocity dissipation devices such as check dams, sediment traps, and riprap are provided at the discharge points of all dewatering devices, and
(f) Sediment removed from the dewatering treatment devices described in Item (c) above is disposed of in a manner that does not cause deposition of sediment into waters of the United States.

NCG01 SELF-INSPECTION, RECORDKEEPING AND REPORTING | EFFECTIVE: 04/01/19

A EROSION CONTROL NOTES
NOT TO SCALE

WALKER the GROUP ARCHITECTURE incorporated
PO BOX 541, NEW BERN, NC 28563
2526366778

Digitally signed by John K. Avolis
NORTH CAROLINA PROFESSIONAL SEAL 15738 ENGINEER JOHN K. AVOLIS
JULY 28, 2025

PUBLIC SAFETY TRAINING CENTER

525 Executive Pkwy
New Bern, NC 28562

BID DOCUMENTS

SCO # 24-27879-01A

Revisions

No.	Date

Project Number

Date
7-28-2025

Drawn
MSP

Checked
JKA

Scale
AS NOTED

Drawing Title
DETAILS

Sheet Number
77 of **158**

Drawing Number
CG502

LICENSE NO. C-0706
A/E PROJECT #23020
AVOLIS ENGINEERING, P.A.
P.O. BOX 15564
NEW BERN, NC 28561
PH. (252) 633-0068
kevin@avoliseng.com

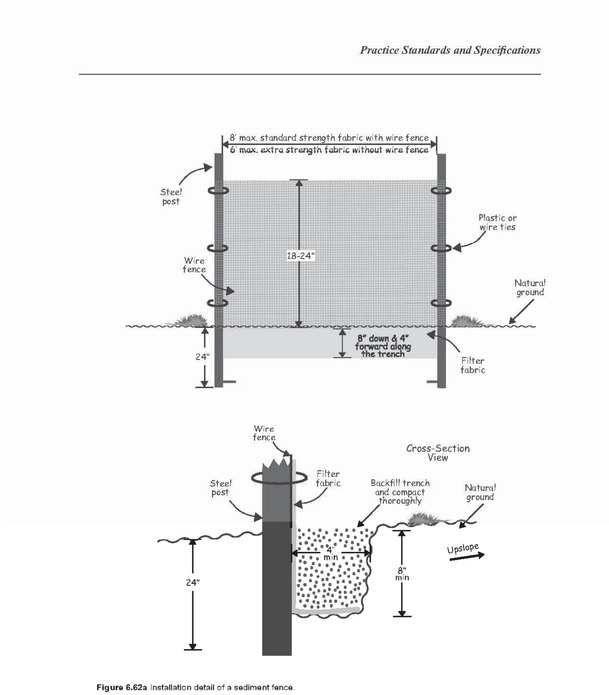

Figure 6.62a Installation detail of a sediment fence.

Rev. 5/13

6.62.5

SPECIFICIATION:

1. THE FILTER FABRIC SHALL BE A SYNTHETIC FABRIC OF AT LEAST 95% BY WEIGHT OF POLYOLEFINS OR POLYESTER, WHICH IS CERTIFIED BY THE MANUFACTURER AS CONFORMING TO THE REQUIREMENTS OF ASTM D 6461. SYNTHETIC FILTER FABRIC SHALL CONTAIN ULTRAVIOLET RAY INHIBITORS AND STABILIZERS TO PROVIDE A 6 MONTH MINIMUM EXPECTED LIFE AT A TEMPERATURE RANGE OF 0 TO 120 DEGREES F.
2. STEEL POST HAVE A MINIMUM LENGTH OF 5 FEET AND A WEIGHT OF 1.25 LBS/LF MINIMUM.
3. WIRE FABRIC SHALL BE MINIMUM 14 GAUGE AND A MAXIMUM MESH SPACING OF 6 INCHES, EACH WAY.

MAINTENANCE
1. INSPECT STRUCTURES WEEKLY AND AFTER AT LEAST A 1/2" OR GREATER RAINFALL EVENT.
2. REMOVE SEDIMENT FROM BEHIND SILT FENCE PRIOR TO IT REACHING A MAXIMUM DEPTH OF SIX (6) INCHES.

A SILT FENCE
NOT TO SCALE

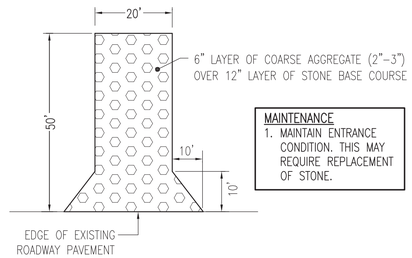

MAINTENANCE
1. MAINTAIN ENTRANCE CONDITION. THIS MAY REQUIRE REPLACEMENT OF STONE.

B GRAVEL CONTROL ENTRANCE
NOT TO SCALE

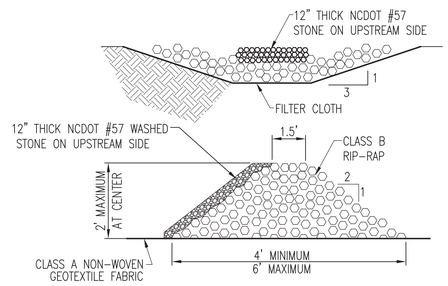

MAINTENANCE
1. CONSTRUCT CHECK DAM OF RIP-RAP STONE PLACED IN ACCORDANCE WITH DETAIL.
2. SEDIMENT BEHIND THE CHECK DAM MUST BE REMOVED PRIOR TO THE LEVEL REACHING WITHIN 6" OF THE CENTERLINE CREST OF THE DAM.
3. SHOULD SCOUR DEVELOP AT THE DOWNSTREAM END, IT MUST BE REPAIRED IMMEDIATELY.

C CHECK DAM
NOT TO SCALE

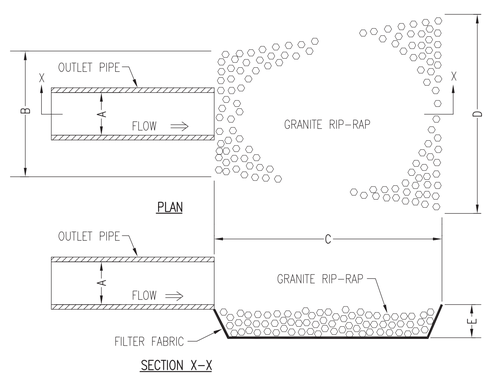

DESIGNATION	A	B	C	D	E	MIN. RIP RAP SIZE	MAX. RIP RAP SIZE	COMMENTS
TYPE A	24"	6'	10'	12'	18"	6"	9"	
TYPE B	24"	6'	25'	18'	32"	14"	21"	AT OUTFALL OF POND #3

MAINTENANCE:
1. INSPECT STRUCTURES AT LEAST WEEKLY AND AFTER ANY RAINFALL EVENT GREATER THAN ONE-HALF INCH.
2. IMMEDIATELY MAKE ALL NEEDED REPAIRS.

D INLET/OUTLET PROTECTION
NOT TO SCALE

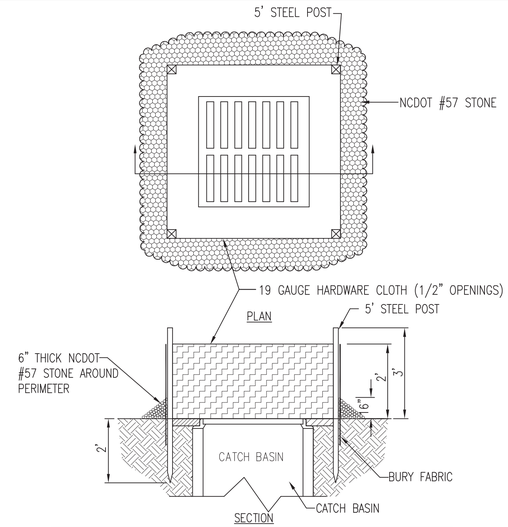

NOTE:
UNIFORMLY GRADE A SHALLOW DEPRESSION APPROACHING THE INLET.

NOTE:
PROVIDE DROP INLET PROTECTION AT ALL DRAINAGE STRUCTURES.

MAINTENANCE:
1. INSPECT STRUCTURES WEEKLY AND AFTER AT LEAST A 1/2" OR GREATER RAINFALL EVENT.
2. CLEAR DEBRIS AND REPLACE STONE AS NEEDED.
3. REMOVED ACCUMULATED SEDIMENT WHEN IT REACHES A MAXIMUM DEPTH OF 6 INCHES.

E DROP INLET PROTECTION
NOT TO SCALE

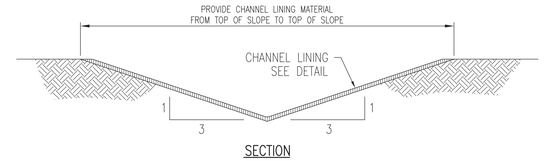

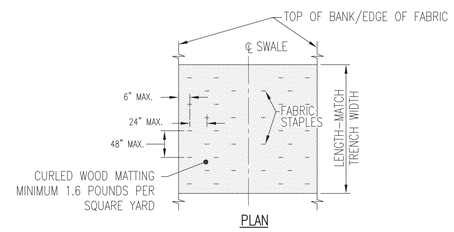

NOTES:
1. INSTALL MATTING IN ACCORDANCE WITH MANUFACTURER'S RECOMMENDATIONS
2. PREPARE, SEED AND FERTILIZE SWALE PRIOR TO MATTING INSTALLATION.
3. APPLY MATTING IN DIRECTION OF WATER FLOW.
4. PLACE MATTING IN CONTACT WITH SOIL.
5. BUTT ROLLS OF MATTING WITH 6" OVERLAP.
6. U-STAPLES SHOULD HAVE 6" MIN. LENGTH AND 1" MIN. CROWN.

CHANNEL LINING

NIOTE: ALL PROJECT SWALES INCLUDING ROADSIDE SWALES SHALL BE LINED

F LINED SWALE
NOT TO SCALE

AVOLIS ENGINEERING, P.A.
P.O. BOX 15564
NEW BERN, NC 28561
PH. (252) 638-3000
kevin@avolisengineering.com
LICENSE NO. C-0706
AVOLIS PROJECT #23020

WALKER the GROUP ARCHITECTURE incorporated
PO BOX 541, NEW BERN, NC 28563
2526366778

Digitally signed by John K. Avolis
NORTH CAROLINA PROFESSIONAL SEAL 15738 ENGINEER JOHN K. AVOLIS
JULY 28, 2025

PUBLIC SAFETY TRAINING CENTER

525 Executive Pkwy
New Bern, NC 28562

BID DOCUMENTS
SCO # 24-27879-01A

Revisions
No. Date

Project Number
Date **7-28-2025**
Drawn **MSP**
Checked **JKA**
Scale **AS NOTED**
Drawing Title
DETAILS

Sheet Number **78** of **158**
Drawing Number
CG503

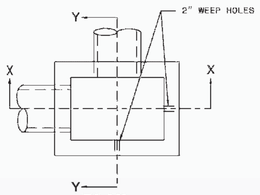

PLAN

WITH GRATE & FRAME REMOVED

GENERAL NOTES:

USE CLASS "B" CONCRETE THROUGHOUT.

PROVIDE ALL DROP INLETS OVER 3'-6" IN DEPTH WITH STEPS 12" ON CENTER. USE STEPS WHICH COMPLY WITH STD. DRAWING 840.66.

OPTIONAL CONSTRUCTION - MONOLITHIC POUR. 2" KEYWAY OR #4 BAR DOWELS AT 12" CENTERS AS DIRECTED BY THE ENGINEER.

USE FORMS FOR THE CONSTRUCTION OF THE BOTTOM SLAB.

IF REINFORCED CONCRETE PIPE IS SET IN BOTTOM SLAB OF BOX, ADD TO SLAB AS SHOWN ON STD. NO. 840.00.

CONSTRUCT WITH PIPE GROWNS MATCHING.

SEE STANDARD DRAWING 840.25 FOR ATTACHMENT OF FRAMES AND GRATES NOT SHOWN.

INSTALL 2" WEEPHOLES AS DIRECTED BY THE ENGINEER.

INSTALL STONE DRAINS, OF A MINIMUM OF 1 CUBIC FOOT OF NO. 78M STONE IN A POROUS FABRIC BAG OR WRAP, AT EACH WEEP HOLE OR AS DIRECTED BY THE ENGINEER.

CHAMFER ALL EXPOSED CORNERS 1".

DRAWING NOT TO SCALE.

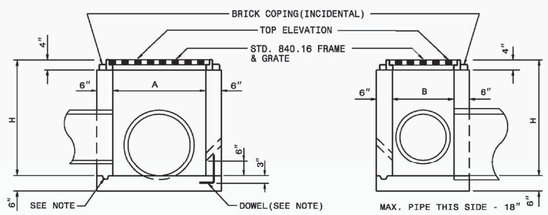

SECTION X-X

SECTION Y-Y

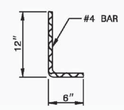

DOWEL

DIMENSIONS AND QUANTITIES FOR DROP INLET(BASED ON MIN. HEIGHT, H)								
DIMENSIONS OF BOX & PIPE				CUBIC YARDS CONC. IN BOX			DEDUCTIONS FOR ONE PIPE	
PIPE	SPAN	WIDTH	MIN. HEIGHT					
D	A	B	H	BOTTOM SLAB	WALL PER FT. HT.	TOTAL CONCRETE FOR MINIMUM HEIGHT, H	C.M.	R.C.
12"	3'-0"	2'-0"	2'-0"	0.222	0.222	0.592	0.015	0.026
15"			2'-3"			0.648	0.023	0.036
18"			2'-6"			0.703	0.033	0.049
24"			3'-0"			0.814	0.059	0.085
30"	3'-0"	2'-0"	3'-6"	0.222	0.222	0.925	0.092	0.127

1-18 STATE OF NORTH CAROLINA DEPT. OF TRANSPORTATION DIVISION OF HIGHWAYS RALEIGH, N.C.

ROADWAY STANDARD DRAWING FOR **CONCRETE DROP INLET** 12" THRU 30" PIPE

SHEET 1 OF 1

840.14

CONCRETE DROP INLET

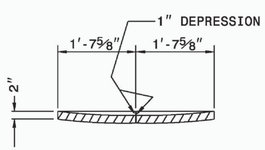

SECTION G-G

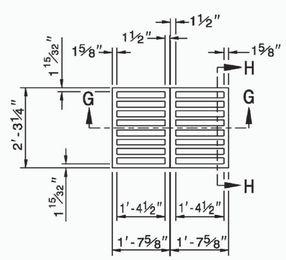

PLAN OF GRATING

CAST IRON

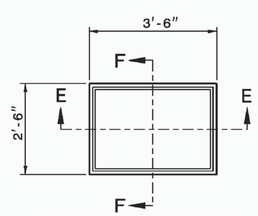

PLAN OF FRAME

CAST IRON

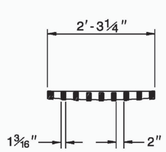

SECTION H-H

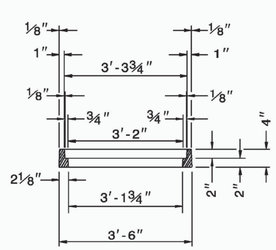

SECTION E-E

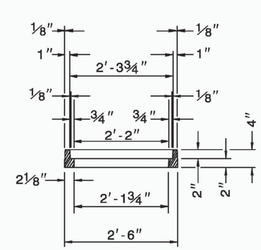

SECTION F-F

1-18 STATE OF NORTH CAROLINA DEPT. OF TRANSPORTATION DIVISION OF HIGHWAYS RALEIGH, N.C.

ROADWAY STANDARD DRAWING FOR **DROP INLET FRAME AND GRATES** FOR USE WITH STD. DWG.S 840.14 AND 840.15

SHEET 1 OF 1

840.16

DROP INLET FRAME AND GRATE

A DROP INLET, FRAME AND GRATE

NOT TO SCALE

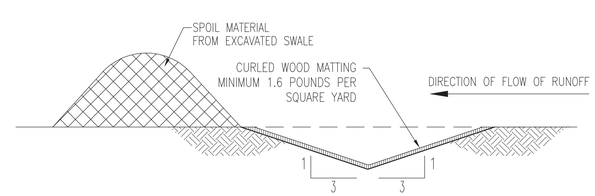

NOTES:

1. REPAIR ERODED TEMPORARY DIVERSION SWALE SLOPES AFTER RAINFALL EVENTS.
2. REMOVE ANY ACCUMULATED SEDIMENT FROM TEMPORARY DIVERSION SWALE.
3. UPON COMPLETION OF CONSTRUCTION AND ESTABLISHMENT OF VEGETATION, THE DIVERSION SWALE SHALL BE FILLED, THE AREA GRADED TO DRAIN, AND ALL DISTURBED AREAS VEGETATED IN ACCORDANCE WITH THE PROJECT VEGETATION PLAN.

B TEMPORARY DIVERSION SWALE

NOT TO SCALE

AVOLIS ENGINEERING, P.A.
P.O. BOX 15564
NEW BERN, NC 28561
PH. (252) 633-0068
kevin@avoliseng.com
LICENSE NO. C-0706
A/E PROJECT #23020

WALKER the GROUP ARCHITECTURE incorporated
PO BOX 541, NEW BERN, NC 28563
2526366776

Digitally signed by John K Avolis

NORTH CAROLINA PROFESSIONAL SEAL 15738 ENGINEER JOHN K AVOLIS

JULY 28, 2025

PUBLIC SAFETY TRAINING CENTER

525 Executive Pkwy
New Bern, NC 28562

BID DOCUMENTS

SCO # 24-27879-01A

No.	Date	Revisions

Project Number

Date **7-28-2025**

Drawn **MSP**

Checked **JKA**

Scale **AS NOTED**

Drawing Title

DETAILS

Sheet Number **79** of **158**

Drawing Number

CG504

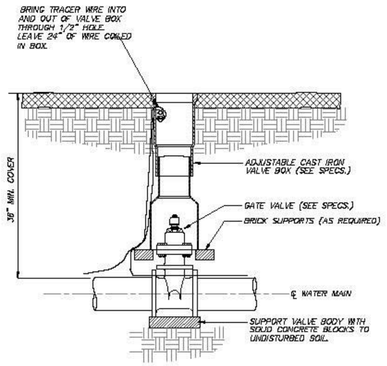

NOTES:

1. PROVIDE PRECAST COLLAR FOR VALVES IN UNPAVED AREAS.

NOT TO SCALE

NEW BERN
NORTH CAROLINA
Department of Public Utilities
P.O. Box 1129, New Bern, NC 28563
252.639.7526 (FAX) 252.636.4103

TYPICAL VALVE AND VALVE BOX

STANDARD DRAWING No. W-4

A VALVE AND VALVE BOX
SCALE: NTS

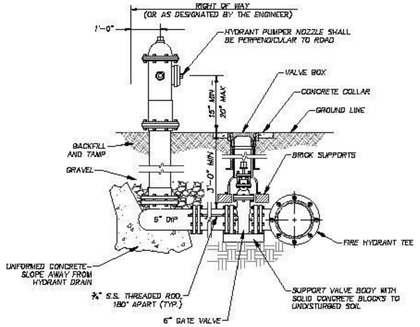

NOTES:

1. HYDRANT SHALL BE MUELLER MODEL NO. A421, OR AMERICAN-DARLING MODEL MK73-5, 4-½".
2. HYDRANT SHALL BE PROVIDED WITH STANDARD NEW BERN STORZ CONNECTION ON THE PUMPER NOZZLE .

NOT TO SCALE

NEW BERN
NORTH CAROLINA
Department of Public Utilities
P.O. Box 1129, New Bern, NC 28563
252.639.7526 (FAX) 252.636.4103

TYPICAL FIRE HYDRANT ASSEMBLY

STANDARD DRAWING No. W-3

B FIRE HYDRANT ASSEMBLY
SCALE: NTS

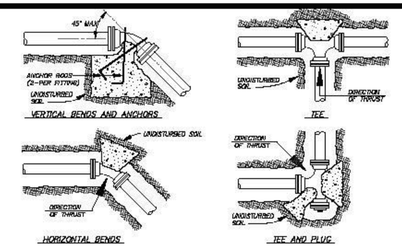

CONCRETE THRUST BLOCKING SCHEDULE						CONCRETE SCHEDULE VERTICAL BENDS				ANCHOR ROD SIZE
FITTING SIZE	BEARING AREA IN SQUARE FEET					MIN. CU. YARDS CONCRETE				FOR VERTICAL BEND AND ANCHORS
	TEE/PLUG	60°	45°	22-1/2°	11-1/4°	90°	45°	22-1/2°	11-1/2°	
4"	1	2	1	1	1	1	1	1	1	1/2"
6"	3	3	2	1	1	1	1	1	1	
8"	4	6	3	2	1	2	2	1	1	3/4"
10"	7	9	5	3	2	3	3	2	1	
12"	9	13	7	4	2	5	3	2	1	
14"	12	17	9	5	3	6	4	3	2	7/8"
16"	16	22	12	6	3	8	6	3	2	
18"	20	27	15	8	4	10	7	4	2	
20"	24	34	18	10	5	12	9	5	3	
24"	34	48	26	14	7	17	12	7	4	1-1/8"
30"	53	75	41	21	11	27	18	10	5	
36"	77	108	58	30	15	38	27	15	8	1-3/8"

NOTES:

1. MINIMUM BEARING AREA (IN SQUARE FEET) AGAINST UNDISTURBED TRENCH WALL OF SAND.
2. AREAS SHOWN ARE FOR 150 PSI TEST PRESSURE. IF TEST PRESSURE IS OTHER THAN 150 PSI, ADJUST AREA OF REACTION BACKING IN DIRECT PROPORTION.
3. OTHER SOIL CONDITIONS CEMENTED SAND OR HARDPAN – MULTIPLY ABOVE BY 0.5
   GRAVEL OR HARD DRY CLAY – MULTIPLY ABOVE BY 0.7
   SOFT CLAY – MULTIPLY ABOVE BY 2.0
   NOTE: SECURE ALL FITTINGS WITH APPROVED HARNESS OR TIE ROD CLAMPS, WITH CONCRETE REACTION BACKING THE SAME AS LISTED FOR SAND CONDITIONS.

NOT TO SCALE

NEW BERN
NORTH CAROLINA
Department of Public Utilities
P.O. Box 1129, New Bern, NC 28563
252.639.7526 (FAX) 252.636.4103

THRUST BLOCKING AND ANCHORING SCHEDULE

STANDARD DRAWING No. W-5

C THRUST BLOCKING
SCALE: NTS

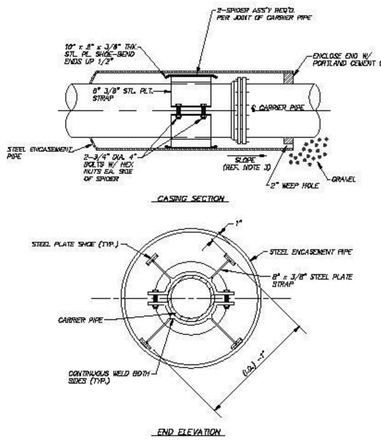

NOTES:

1. ENTIRE SPIDER ASSEMBLY TO BE BITUMINOUS COATED AFTER FABRICATION
2. FIELD MODIFY AS REQUIRED TO PROVIDE DESIGN SLOPE IN CARRIER PIPE.
3. STEEL ENCASEMENT TO BE INSTALLED IN ACCORDANCE WITH APPROVED DESIGN PLANS. ALL REVISIONS OR MODIFICATIONS ARE SUBJECT TO APPROVAL.

NOT TO SCALE

NEW BERN
NORTH CAROLINA
Department of Public Utilities
P.O. Box 1129, New Bern, NC 28563
252.639.7526 (FAX) 252.636.4103

TYPICAL PIPE ENCASEMENT DETAIL

STANDARD DRAWING No. W-7

D PIPE ENCASEMENT
SCALE: NTS

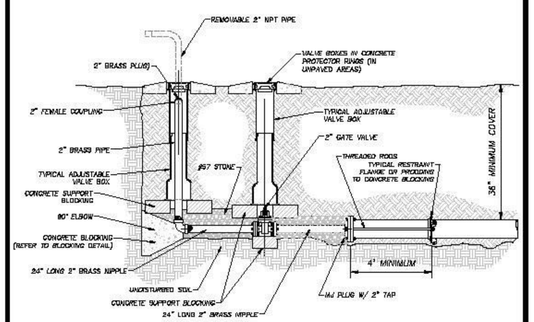

NOT TO SCALE

NEW BERN
NORTH CAROLINA
Department of Public Utilities
P.O. Box 1129, New Bern, NC 28563
252.639.7526 (FAX) 252.636.4103

PERMANENT 2" END-OF-LINE BLOWOFF

STANDARD DRAWING No. W-9

E END-OF-LINE BLOWOFF
SCALE: NTS

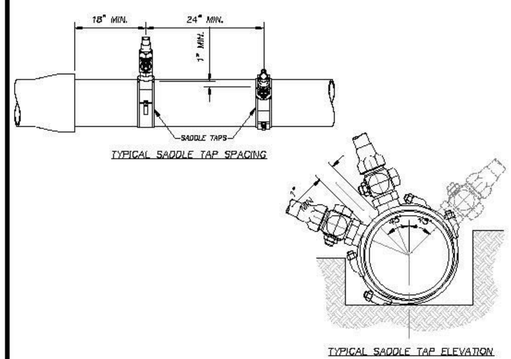

NOTES:

1. TAPS SHALL BE INSTALLED WITH A MINIMUM HORIZONTAL SEPARATION OF 24".
2. MULTIPLE TAPS ON THE SAME SIDE OF THE LINE SHALL BE STAGGERED A MINIMUM OF 17" VERTICALLY TO PREVENT DAMAGE TO THE MAIN.
3. SERVICE SADDLES SHALL BE INSTALLED A MINIMUM OF 18" FROM PIPE JOINTS.

NOT TO SCALE

NEW BERN
NORTH CAROLINA
Department of Public Utilities
P.O. Box 1129, New Bern, NC 28563
252.639.7526 (FAX) 252.636.4103

TYPICAL TAPPING SADDLE

STANDARD DRAWING No. W-12

F SERVICE SADDLE
SCALE: NTS

WALKER the GROUP ARCHITECTURE incorporated
PO BOX 541, NEW BERN, NC 28563
2526366778

Digitally signed by John K. Avolis
NORTH CAROLINA PROFESSIONAL SEAL 15738 ENGINEER JOHN K. AVOLIS
JULY 28, 2025

PUBLIC SAFETY TRAINING CENTER

525 Executive Pkwy
New Bern, NC 28562

BID DOCUMENTS

SCO # 24-27879-01A

No.	Date	Revisions

Project Number

Date **7-28-2025**

Drawn **MSP**

Checked **JKA**

Scale **AS NOTED**

Drawing Title

DETAILS

Sheet Number **80** of **158**

Drawing Number

CU501

LICENSE NO. C-0706
A/E PROJECT #23020
AVOLIS ENGINEERING, P.A.
P.O. BOX 15564
NEW BERN, NC 28561
PH. (252) 633-0068
kevin@avoliseng.com

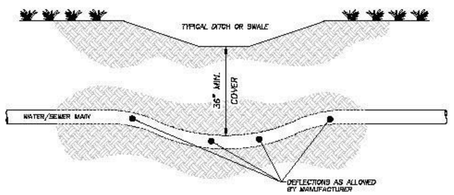

NOT TO SCALE

NEW BERN
NORTH CAROLINA
Department of Public Utilities
P.O. Box 1129, New Bern, NC 28563
252.639.7526 (FAX) 252.636.4103

WATER/SEWER MAIN CROSSING UNDER DITCH

STANDARD DRAWING No. S-15

A WATER/SEWER MAIN CROSSING UNDER DITCH
SCALE: NTS

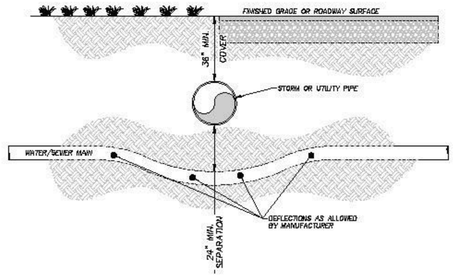

NOT TO SCALE

NEW BERN
NORTH CAROLINA
Department of Public Utilities
P.O. Box 1129, New Bern, NC 28563
252.639.7526 (FAX) 252.636.4103

WATER/SEWER MAIN CROSSING UNDER STORM/UTILITY PIPE

STANDARD DRAWING No. S-16

B WATER/SEWER MAIN CROSSING UNDER STORM DRAIN
SCALE: NTS

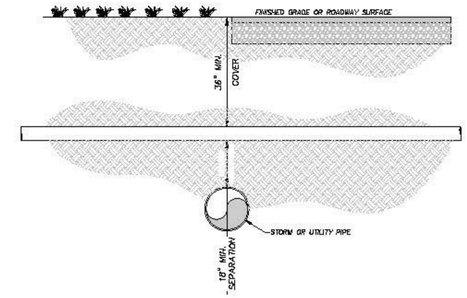

NOT TO SCALE

NEW BERN
NORTH CAROLINA
Department of Public Utilities
P.O. Box 1129, New Bern, NC 28563
252.639.7526 (FAX) 252.636.4103

WATER/SEWER MAIN OVER STORM/UTILITY PIPE

STANDARD DRAWING No. S-17

C WATER/SEWER MAIN CROSSING OVER STORM DRAIN
SCALE: NTS

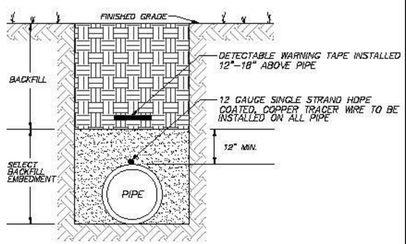

NOTES:

1. BACKFILL SHALL BE PLACED AND COMPACTED IN 9" LIFTS.
2. THE CITY ENGINEER MAY REQUIRE GRANULAR EMBEDMENT AS NECESSARY BASED ON LOCAL SOIL CONDITIONS.
3. SELECT FILL SHALL BE USED FOR ALL BACKFILL IF LOCAL SOILS CONSIDERED TO BE UNSUITABLE.

NOT TO SCALE

NEW BERN
NORTH CAROLINA
Department of Public Utilities
P.O. Box 1129, New Bern, NC 28563
252.639.7526 (FAX) 252.636.4103

BEDDING FOR WATER MAINS AND SEWER FORCE MAINS

STANDARD DRAWING No. S-10

D BEDDING FOR WATER AND SEWER MAINS
SCALE: NTS

WALKER the GROUP ARCHITECTURE incorporated
PO BOX 541, NEW BERN, NC 28563
2526366778

Digitally signed by John K. Avolis
NORTH CAROLINA PROFESSIONAL SEAL 15738 ENGINEER JOHN K. AVOLIS
JULY 28, 2025

PUBLIC SAFETY TRAINING CENTER

525 Executive Pkwy
New Bern, NC 28562

BID DOCUMENTS

SCO # 24-27879-01A

No.	Date	Revisions

Project Number

Date **7-28-2025**

Drawn **MSP**

Checked **JKA**

Scale **AS NOTED**

Drawing Title

DETAILS

Sheet Number **81** of **158**

Drawing Number

CU502

LICENSE NO. C-0706
A/E PROJECT #23020
AVOLIS ENGINEERING, P.A.
P.O. BOX 15564
NEW BERN, NC 28561
PH. (252) 633-0068
kevin@avoliseng.com

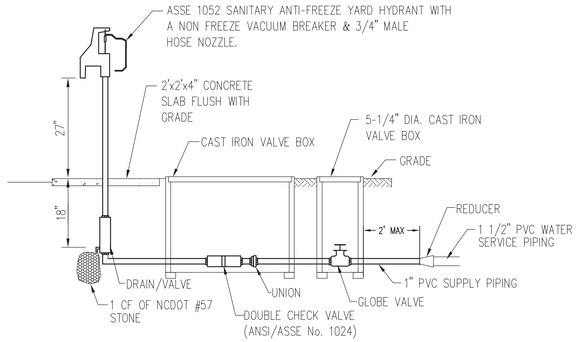

A FROST PROOF YARD HYDRANT

SCALE: NTS

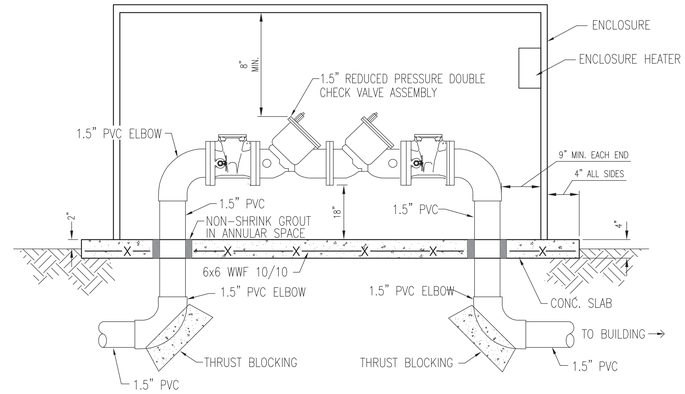

SECTION VIEW

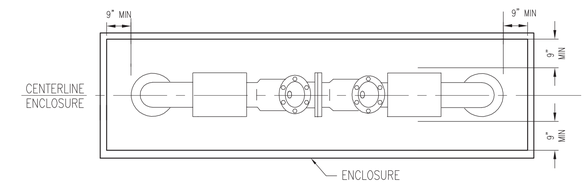

PLAN VIEW

C BACKFLOW ASSEMBLY AND ENCLOSURE

NOT TO SCALE

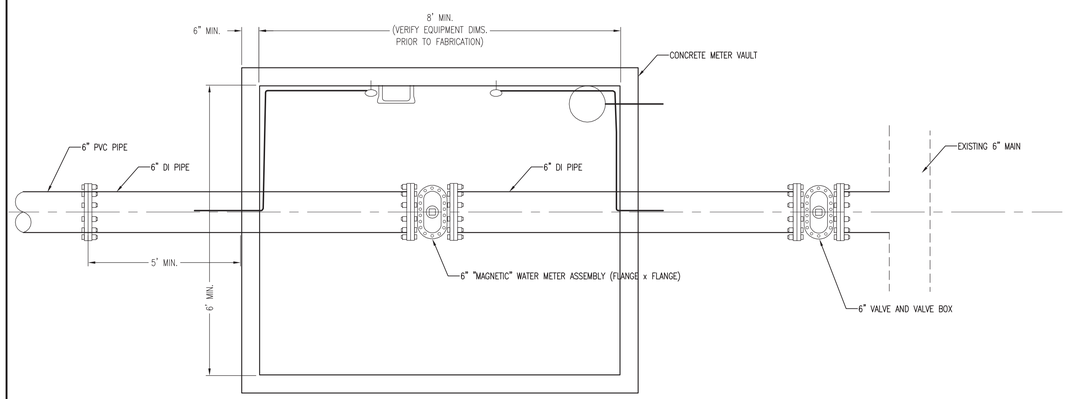

PLAN VIEW

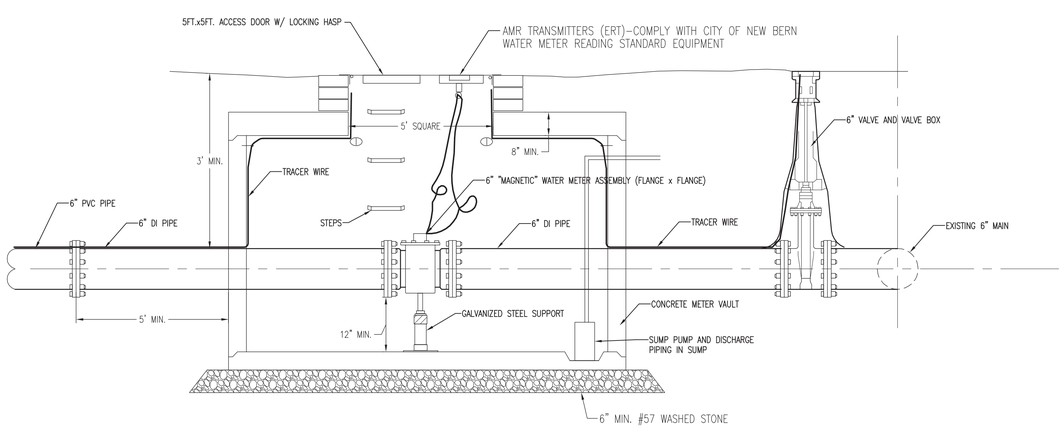

SECTION VIEW

B 6-INCH MASTER WATER METER AND PRECAST CONCRETE VAULT

NOT TO SCALE

AVOLIS ENGINEERING, P.A.
P.O. BOX 15564
NEW BERN, NC 28561
PH. (252) 633-0068
kevin@avoliseng.com
LICENSE NO. C-0706
A/E PROJECT #23020

WALKER the GROUP ARCHITECTURE incorporated
PO BOX 541, NEW BERN, NC 28563
2526366778

Digitally signed by John K. Avolis
NORTH CAROLINA PROFESSIONAL SEAL 15738 ENGINEER JOHN K. AVOLIS
JULY 28, 2025

PUBLIC SAFETY TRAINING CENTER

525 Executive Pkwy
New Bern, NC 28562

BID DOCUMENTS

SCO # 24-27879-01A

No.	Date	Revisions

Project Number

Date **7-28-2025**

Drawn **MSP**

Checked **JKA**

Scale **AS NOTED**

Drawing Title

DETAILS

Sheet Number **82** Of **158**

Drawing Number

CU503

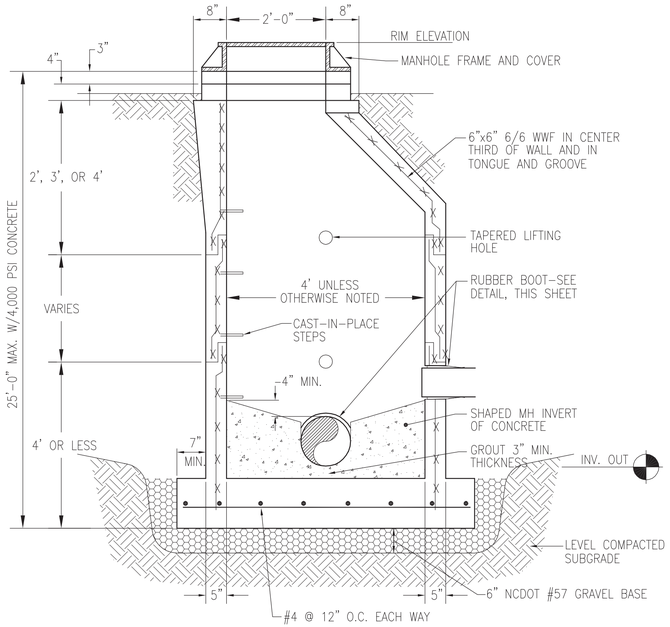

A PRECAST MANHOLE

NOT TO SCALE

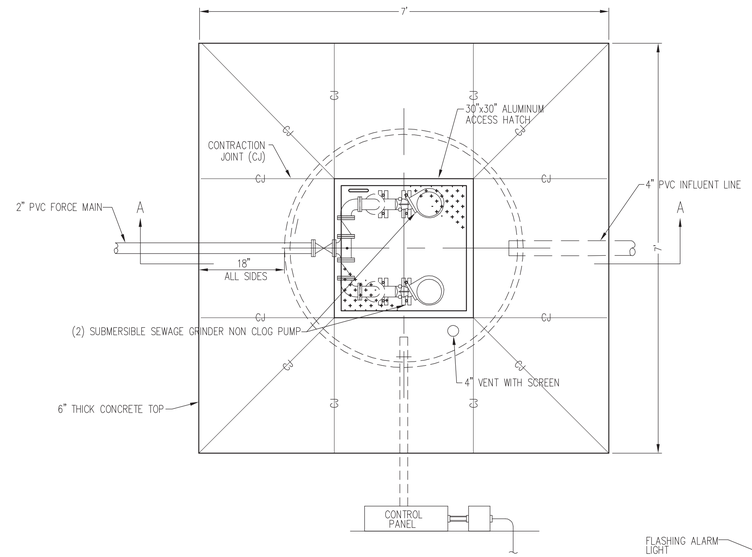

PLAN

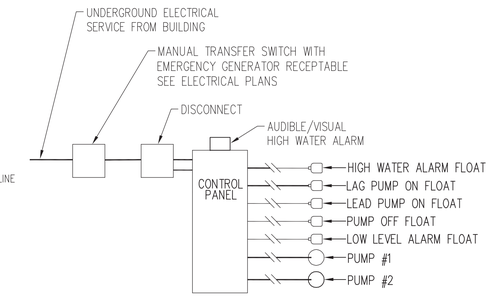

POWER/CONTROLLER SCHEMATIC

NOT TO SCALE

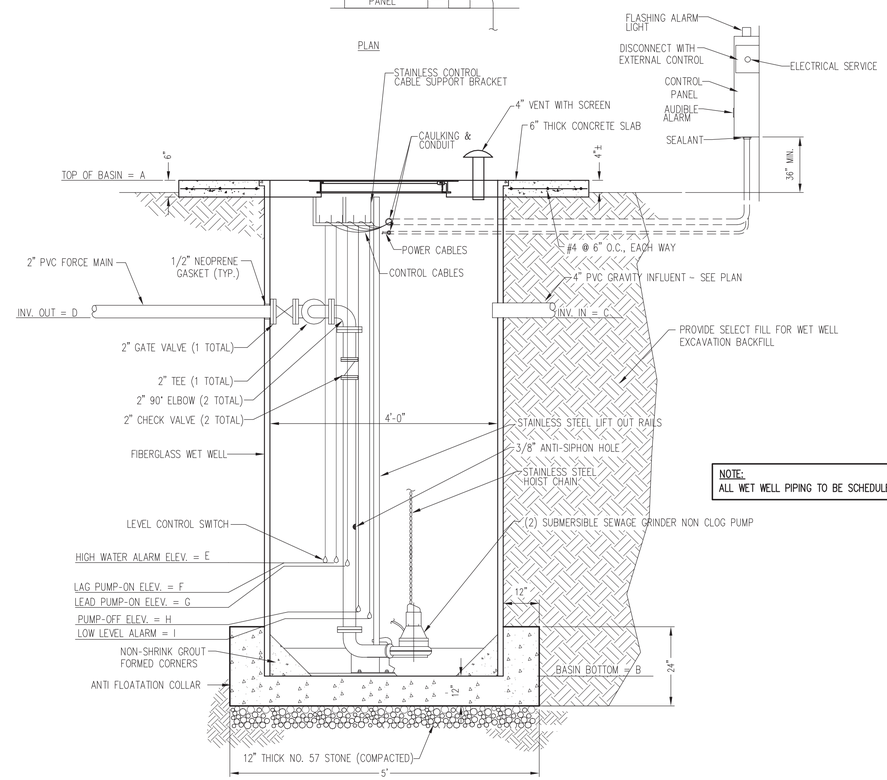

NOTE:
ALL WET WELL PIPING TO BE SCHEDULE 80 PVC

SECTION A-A

SEWER PUMP STATION SUMMARY											
LOCATION	TOP OF BASIN (A)	BOTTOM OF BASIN (B)	INVERT IN (C)	INVERT OUT (D)	E	F	G	H	I	PUMP CAPACITY	PUMP POWER REQUIREMENTS
CLASSROOM	28.5	20.5	26.0	25.0	24.3	24.0	23.5	22.5	22.0	25 GPM @ 32' TDH	240V, SINGLE PHASE
INDOOR RANGE	27.5	19.5	25.0	24.0	23.3	23.0	22.5	21.5	21.0	25 GPM @ 28' TDH	240V, SINGLE PHASE
REHAB	27.5	19.5	25.0	24.0	23.3	23.0	22.5	21.5	21.0	25 GPM @ 28' TDH	240V, SINGLE PHASE
REHAB AT PAD	30.0	22.0	27.5	26.5	23.8	25.5	25.0	24.0	23.5	25 GPM @ 23' TDH	240V, SINGLE PHASE

C PREFABRICATED WET WELL AND PUMP STATION

NOT TO SCALE

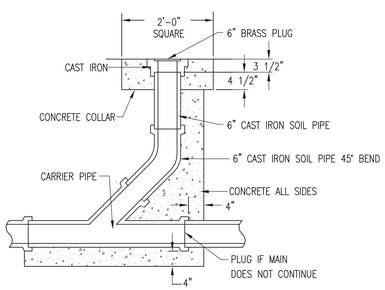

B CLEANOUT

SCALE: NTS

AVOLIS ENGINEERING, P.A.
P.O. BOX 15564
NEW BERN, NC 28561
PH. (252) 633-0068
kevin@avoliseng.com
LICENSE NO. C-0706
A/E PROJECT #23020

WALKER the GROUP ARCHITECTURE incorporated
PO BOX 541, NEW BERN, NC 28563
2526366778

Digitally signed by John K. Avolis
NORTH CAROLINA PROFESSIONAL SEAL 15738 ENGINEER JOHN K. AVOLIS
JULY 28, 2025

PUBLIC SAFETY TRAINING CENTER

525 Executive Pkwy
New Bern, NC 28562

BID DOCUMENTS

SCO # 24-27879-01A

Revisions

No.	Date

Project Number

Date **7-28-2025**

Drawn **MSP**

Checked **JKA**

Scale **AS NOTED**

Drawing Title

DETAILS

Sheet Number **83** of **158**

Drawing Number

CU504

ARCHITECTURAL SYMBOLS

1 / A-501 — DETAIL NUMBER; SHEET WHERE DRAWN **DETAIL TAG**	ROOM / 101 — ROOM NAME; ROOM NUMBER **ROOM TAG**	A1 / A-901 — PHOTOGRAPH NUMBER; SHEET WHERE SHOWN **PHOTOGRAPH TAG**
A1 / A-301 — BUILDING; A1 / A-301 — SECTION NUMBER; SHEET WHERE DRAWN **BUILDING SECTION TAG**	A1 / A-401 — INTERIOR ELEVATION NUMBER; SHEET WHERE DRAWN **INTERIOR ELEVATION TAG**	
A1 / A-301 — SECTION NUMBER; SHEET WHERE DRAWN **WALL / PARTIAL BUILDING SECTION TAG**	1 — KEYNOTE NUMBER **NEW WORK KEYNOTE TAG**	234 — SPECIALITY ITEM NUMBER **SPECIALITY ITEM TAG**
A1 / A-301 — DIRECTION OF VIEW; ELEVATION NUMBER; SHEET WHERE DRAWN **EXTERIOR ELEVATION TAG**	1 — KEYNOTE NUMBER **DEMO KEYNOTE TAG**	33 — PARTITION IN PLAN; PARTITION TYPE DESIGNATION (REFER TO PARTITION SCHEDULE) **PARTITION TYPE TAG**
101 — DOOR NUMBER (REFER TO DOOR SCHEDULE) **DOOR TAG**	B — WINDOW TYPE LETTER **WINDOW TYPE TAG**	

MATERIALS LEGEND

SECTION		ELEVATION	
	WOOD - ROUGH		EIFS - PAINTED
	WOOD BLOCKING		CMU - PAINTED
	PLYWOOD		CMU - PAINTED - ACCENT
	CONCRETE MASONRY UNIT		GLAZED BLOCK
	BRICK		GLAZING
	CAST-IN-PLACE CONCRETE		SPANDREL GLAZING / STEEL PANEL
	STEEL		CONCRETE FOUNDATION
	ALUMINUM		
	GYPSUM BOARD		
	BATT/LOOSE FILL INSULATION		
	RIGID INSULATION		
	SAND / MORTAR / PLASTER		
	EARTH / COMPACT FILL		
	POROUS FILL / GRAVEL		
	ACOUSTICAL TILE CEILING		
	CERAMIC TILE		
	FINISHED WOOD		

GENERAL SHEET NOTES

2. ALL WOOD BLOCKING AND MISCELLANEOUS STEEL SHOWN IN DETAILS AND SECTIONS MUST BE CONTINUOUS UNLESS SPECIFICALLY NOTED OTHERWISE.
3. VERIFY ALL FIELD CONDITIONS AND DIMENSIONS PRIOR TO PROCEEDING WITH THE WORK. DIMENSIONS FOR EXISTING WORK ARE INDICATED AS "±". ALL DISCREPANCIES MUST BE BROUGHT TO THE IMMEDIATE ATTENTION OF THE ARCHITECT IN WRITING.
4. DIMENSIONS INDICATED FOR NEW WORK ARE TO FACE OF STUD, FACE OF MASONRY OR FACE OF EXISTING SURFACES UNLESS OTHERWISE NOTED.
5. STUDY AND COMPARE THE CONTRACT DOCUMENTS WITH EACH OTHER, AND AT ONCE, REPORT TO THE ARCHITECT ANY ERRORS AND INCONSISTENCIES OR OMISSIONS DISCOVERED. ANY CONSTRUCTION ACTIVITY PERFORMED KNOWING IT INVOLVES A RECOGNIZED ERROR, INCONSISTENCY OR OMISSION IN THE CONTRACT DOCUMENTS WITHOUT SUCH NOTICE TO THE ARCHITECT, THE CONTRACTOR WILL ASSUME RESPONSIBILITY FOR SUCH PERFORMANCE AND WILL BEAR THE AMOUNT OF THE COST OF THE CONSTRUCTION.

ARCHITECTURAL ABBREVIATIONS

AB	ANCHOR BOLT
ACS PNL	ACCESS PANEL
ADJ	ADJUST
ALT	ALTERNATE, ALTITUDE
ALUM	ALUMINUM
ANOD	ANODIZED
APPROX	APPROXIMATE
ARCH	ARCHITECT
ASPH	ASPHALT
ATC	ACOUSTICAL TILE CEILING
BD	BOARD
BLDG	BUILDING
BLW	BELOW
BM	BEAM
BOS	BOTTOM OF SLAB / STEEL
BOT	BOTTOM
BRG	BEARING
BSMT	BASEMENT
BTWN	BETWEEN
C TO C	CENTER TO CENTER
CAB	CABINET
CEM	CEMENT
CER	CERAMIC
CI	CAST IRON
CIP	CAST IRON PIPE
CJ	CONTROL / CONSTRUCTION JOINT
CLG	CEILING
CLG REG	CEILING REGISTER
CLR	CLEAR
CMU	CONCRETE MASONRY UNIT
CND	CONDUIT
CNDS	CONDENSATE
CNSTR	CONSTRUCTION
CNTR	CNTR
CO	CLEANOUT
COL	COLUMN
CONC	CONCRETE
CONN	CONNECT
CONT	CONTINUE / CONTINUOUS
CORR	CORRIDOR
CPT	CARPET / COMMON PATH OF TRAVEL
CT	CERAMIC TILE
CTR	CENTER
D	DEPTH / DEEP
DEG	DEGREE
DEMO	DEMOLITION
DET	DETAIL
DIA	DIAMETER
DIM	DIMENSION
DR	DRAIN
DS	DOWNSPOUT
DW	DISHWASHER
DWG	DRAWING
E	EAST
EA	EACH
EIFS	EXTERIOR INSULATION & FINISH SYSTEM
EJ	EXPANSION JOINT
EL	ELEVATION
ELEC	ELECTRIC / ELECTRICAL
EPDM	ETHLENE PROPYLENE DIEN MONOMER
EQ	EQUAL
EQUIP	EQUIPMENT
EW	EACH WAY
EWC	ELECTRIC WATER COOLER
EXH	EXHAUST
EXIST	EXISTING
EXP	EXPANSION / EXPOSED / EXPAND
EXT	EXTERIOR
FD	FLOOR DRAIN
FDTN	FOUNDATION
FF	FINISH FACE
FG	FIGURE
FHC	FIRE HOUSE CABINET
FIN FLR	FINISHED FLOOR
FOF	FACE OF FINISH
FOM	FACE OF MASONRY
FOS	FACE OF STUB / FACE OF SLAB
FR	FRAME / FIRE RATING / FIRE RESISTANT
FT	FOOT, FEET
FTG	FOOTING
GA	GAUGE
GALV	GALVANIZED
GFCI	GOVERNMENT FURNISHED CONTRACTOR INSTALLED
GL	GLASS / GROUND LEVEL
GR	GROSS
GSU	GLAZED STRUCTURAL UNIT
GYP	GYPSUM
H	HIGH
HB	HOSE BIB
HDW	HARDWARE
HM	HOLLOW METAL
HORIZ	HORIZONTAL
HT	HEIGHT
HVY	HEAVY
ID	INSIDE DIAMETER
INSUL	INSULATION / INSULATED
INT	INTERIOR
J-BOX	JUNCTION BOX
JAN	JANITOR CLOSET
LAV	LAVATORY
LB	POUND
LT	LIGHT
MACH	MACHINE
MATL	MATERIAL
MAX	MAXIMUM
MECH	MECHANICAL
MFG	MANUFACTURING
MIN	MINIMUM / MINUTE
MISC	MISCELLANEOUS
ML	MATCH LINE
MO	MASONRY OPENING / MOTOR OPERATED
MTD	MOUNTED
MTG	MOUNTING / MEETING
MTL	METAL
MWP	MEMBRANE WATERPROOFING
N	NORTH
NIC	NOT IN CONTRACT
NO	NUMBER
NOM	NOMINAL
SF	SQUARE FOOT
SH	SHINGLES / SINGLE HUNG
SIM	SIMILAR
SPC	SUSPENDED PLASTER CEILING
SPEC	SPECIFICATION
SQ	SQUARE
STD	STANDARD
STOR	STORAGE
STR	STRAIGHT STRIKE / STRINGERS
SUSP	SUSPENDED
T&B	TOP AND BOTTOM
TEL	TELEPHONE
THRES	THRESHOLD
THRU	THROUGH
TOS	TOP OF SLAB / STEEL
TYP	TYPICAL
UON	UNLESS OTHERWISE NOTED
V	VOLT
VAR	VARIATION
VB	VINYL BASE
VCT	VINYL COMPOSITION TILE
VENT	VENTILATION / VENTILATOR
VERT	VERTICAL
VEST	VESTIBULE
VS	VENT STACK
VTR	VENT THROUGH ROOF
VWC	VINYL WALL COVERING
W	WASTE / WATT / WEST / WIDE
W/	WITH
W/O	WITHOUT
WC	WATER CLOSET / WALL COVERING
WD	WOOD
WH	WATER HEATER
WP	WATERPROOFING / WEATHERPROOF / WORKING POINT
WSCT	WAINSCOT
WT	WEIGHT
WWF	WELDED WIRE FABRIC
XRMR	TRANSFORMER

WALKER the GROUP ARCHITECTURE incorporated
PO BOX 541, NEW BERN, NC 28563
252-636-8778

Christopher B. Walker REGISTERED SEAL 15616 07/28/25 ARCHITECT NORTH CAROLINA

THE WALKER GROUP ARCHITECTURE INCORPORATED REGISTERED ARCHITECTURAL CORPORATION CERT. NO. 51132 NORTH CAROLINA NEW BERN, NC

CRAVEN COMMUNITY COLLEGE-PUBLIC SAFETY TRAINING CENTER

525 Executive Pkwy
New Bern, NC 28562

Bid Documents

SCO # 24-27879-01A

No.	Date	Revisions

Project Number: 2407.SAFE
Date: 07/28/25
Drawn: E.C./T.R.A.
Checked: CBW
Scale: AS NOTED

Drawing Title

ARCHITECTURAL NOTES & SYMBOLS

Sheet Number
84 Of 158

Drawing Number
A-001

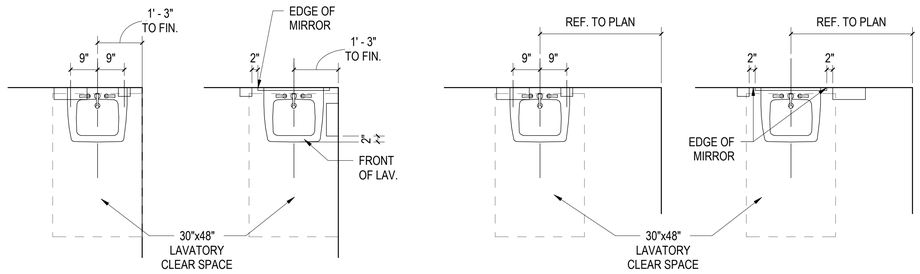

A ACCESSIBLE LAVATORY LAYOUTS

SCALE: 1/2" = 1'-0"

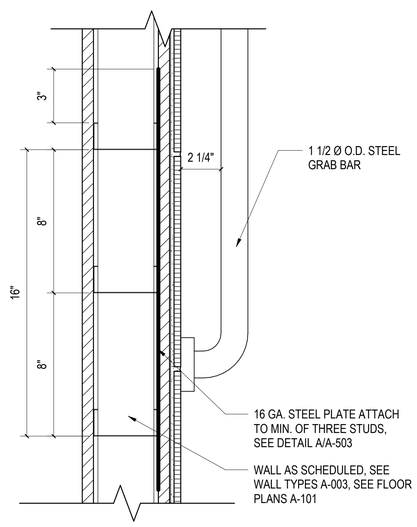

C (TYP) GRAB BAR MOUNTING

SCALE: 3" = 1'-0"

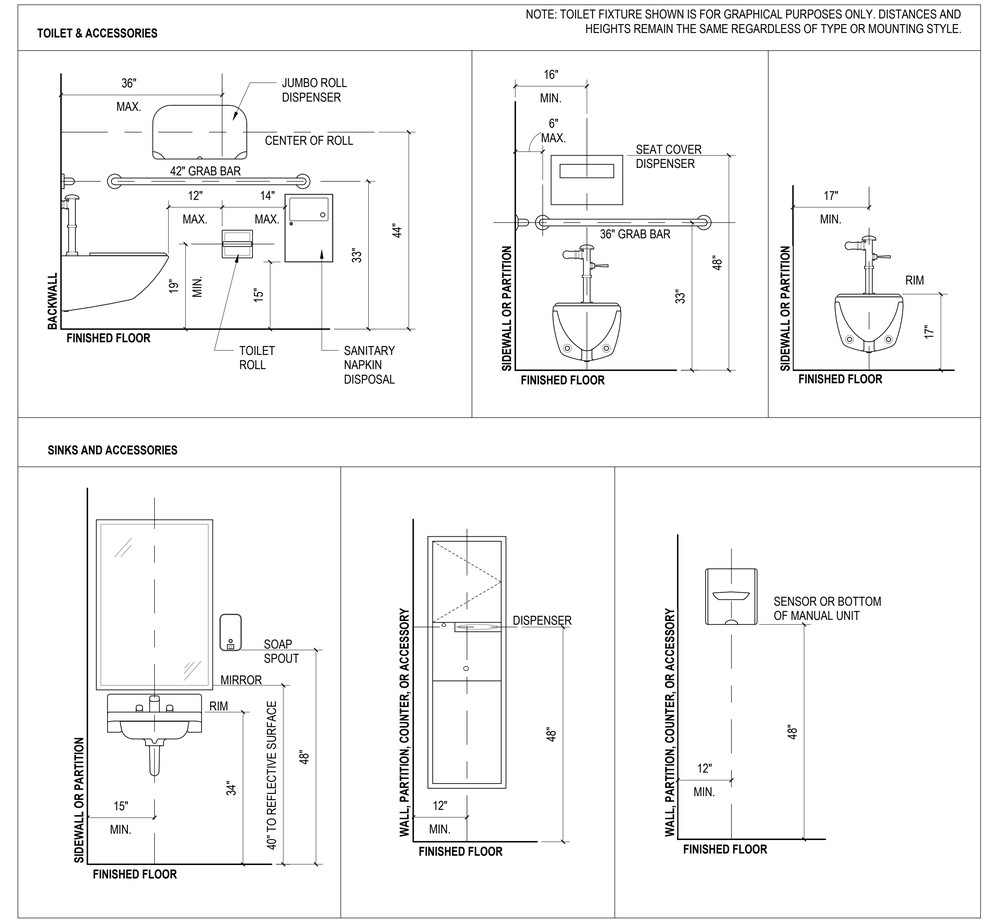

B ACCESSIBLE MOUNTING HEIGHTS AND DIMENSIONS

SCALE: 3/4" = 1'-0"

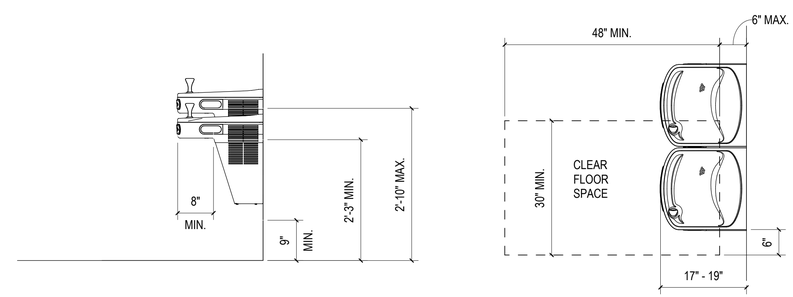

D ACCESSIBLE WATER COOLER DETAIL

SCALE: 3/4" = 1'-0"

1/2" =1'-0" 0' 1' 2' 4'

3/4" =1'-0" 0' 1' 2' 3'

3" =1'-0" 0' 3" 6" 9"

WALKER the GROUP ARCHITECTURE incorporated
PO BOX 541, NEW BERN, NC 28563
252-636-8778

Christopher B. Walker REGISTERED SEAL 15616 07/28/25 ARCHITECT NORTH CAROLINA

THE WALKER GROUP ARCHITECTURE INCORPORATED REGISTERED ARCHITECTURAL CORPORATION CERT. NO. 51132 NORTH CAROLINA NEW BERN, NC

CRAVEN COMMUNITY COLLEGE-PUBLIC SAFETY TRAINING CENTER

525 Executive Pkwy
New Bern, NC 28562

Bid Documents

SCO # 24-27879-01A

Revisions

No.	Date

Project Number: 2407.SAFE
Date: 07/28/25
Drawn: E.C./T.R.A.
Checked: CBW
Scale: AS NOTED

Drawing Title

ACCESSIBLE MOUNTING HEIGHTS & DETAILS

Sheet Number
85 Of 158

Drawing Number
A-002

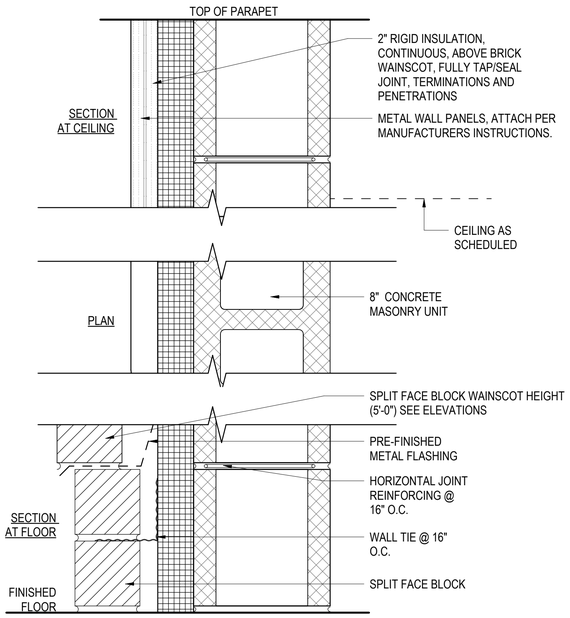

WALL TYPE A - RANGE

SCALE: 3" = 1'-0"

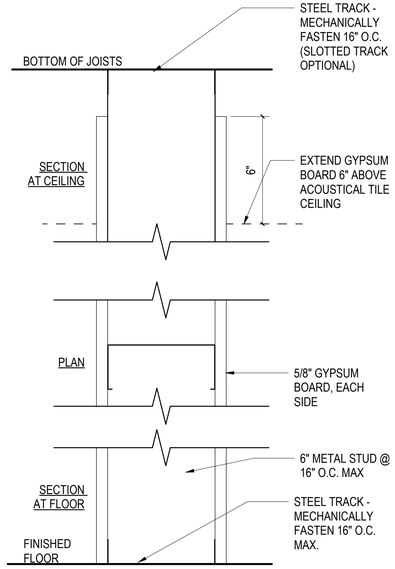

WALL TYPE B - RANGE

SCALE: 3" = 1'-0"

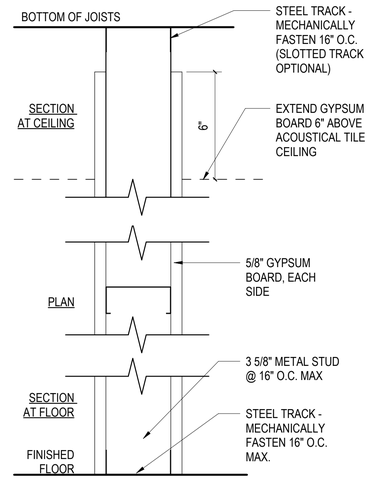

WALL TYPE C - RANGE

SCALE: 3" = 1'-0"

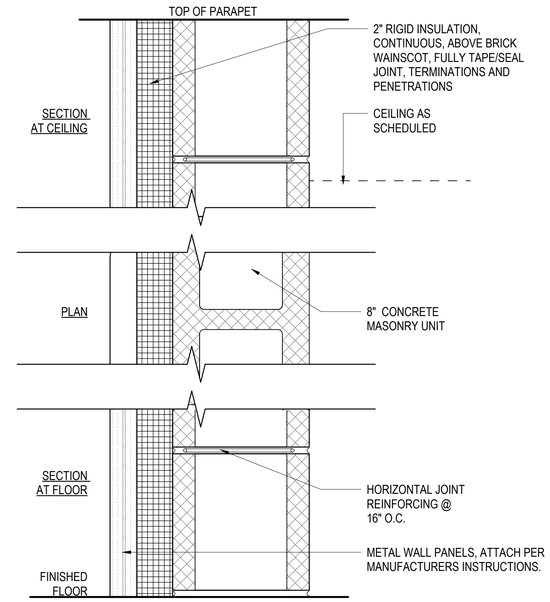

WALL TYPE D - RANGE

SCALE: 3" = 1'-0"

WALL TYPE D

MARK	WIDTH	FRAMING	COMMENTS
D	11"	HIGH DENSITY CMU BLOCK, HIGH DENSITY CAVITY FILL	MORTAR JOINTS TO BE FLUSH WITH BLOCK FACE

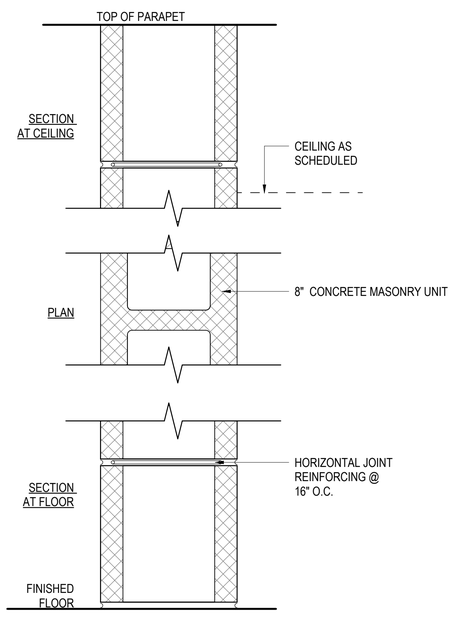

WALL TYPE E - RANGE

SCALE: 3" = 1'-0"

WALL TYPE E

MARK	WIDTH	FRAMING	COMMENTS
E	8"	HIGH DENSITY CMU BLOCK, HIGH DENSITY CAVITY FILL	MORTAR JOINT TO BE FLUSH WITH BLOCK FACE

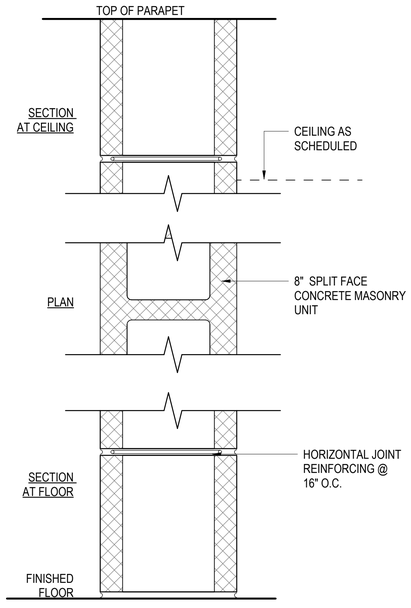

WALL TYPE A - REHAB

SCALE: 3" = 1'-0"

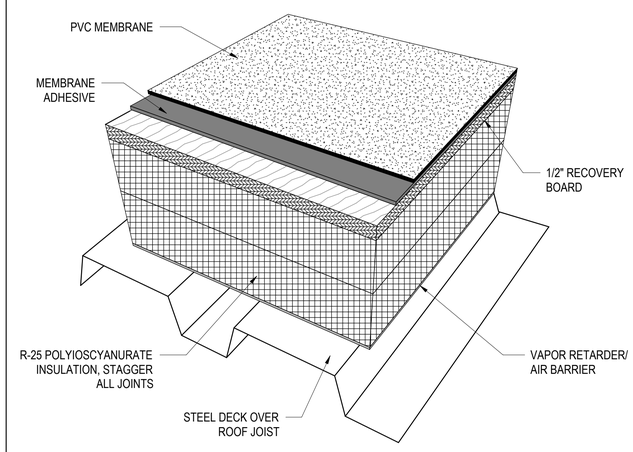

PVC ROOF - RANGE

SCALE: 3" = 1'-0"

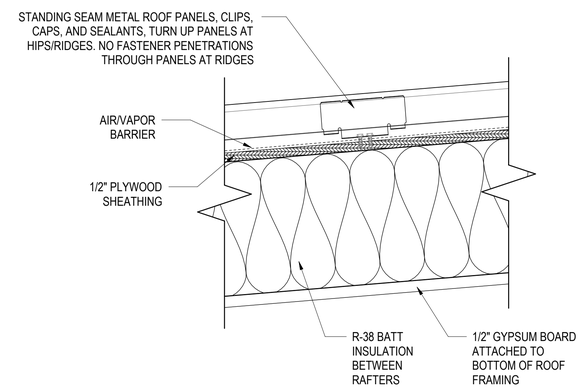

STANDING SEAM METAL ROOF - REHAB

SCALE: 3" = 1'-0"

3" =1'-0" 0' 3" 6" 9"

WALKER the GROUP ARCHITECTURE incorporated
PO BOX 541, NEW BERN, NC 28563
252-636-8778

Christopher B. Walker REGISTERED SEAL 15616 07/28/25 ARCHITECT NORTH CAROLINA

THE WALKER GROUP ARCHITECTURE INCORPORATED REGISTERED ARCHITECTURAL CORPORATION CERT. NO. 51132 NORTH CAROLINA NEW BERN, NC

CRAVEN COMMUNITY COLLEGE- PUBLIC SAFETY TRAINING CENTER

525 Executive Pkwy New Bern, NC 28562

Bid Documents

SCO # 24-27879-01A

Revisions

No.	Date

Project Number: 2407.SAFE
Date: 07/28/25
Drawn: E.C./T.R.A.
Checked: CBW
Scale: AS NOTED

Drawing Title

WALL & ROOF TYPE ASSEMBLIES

Sheet Number: 86 Of 158

Drawing Number: A-003

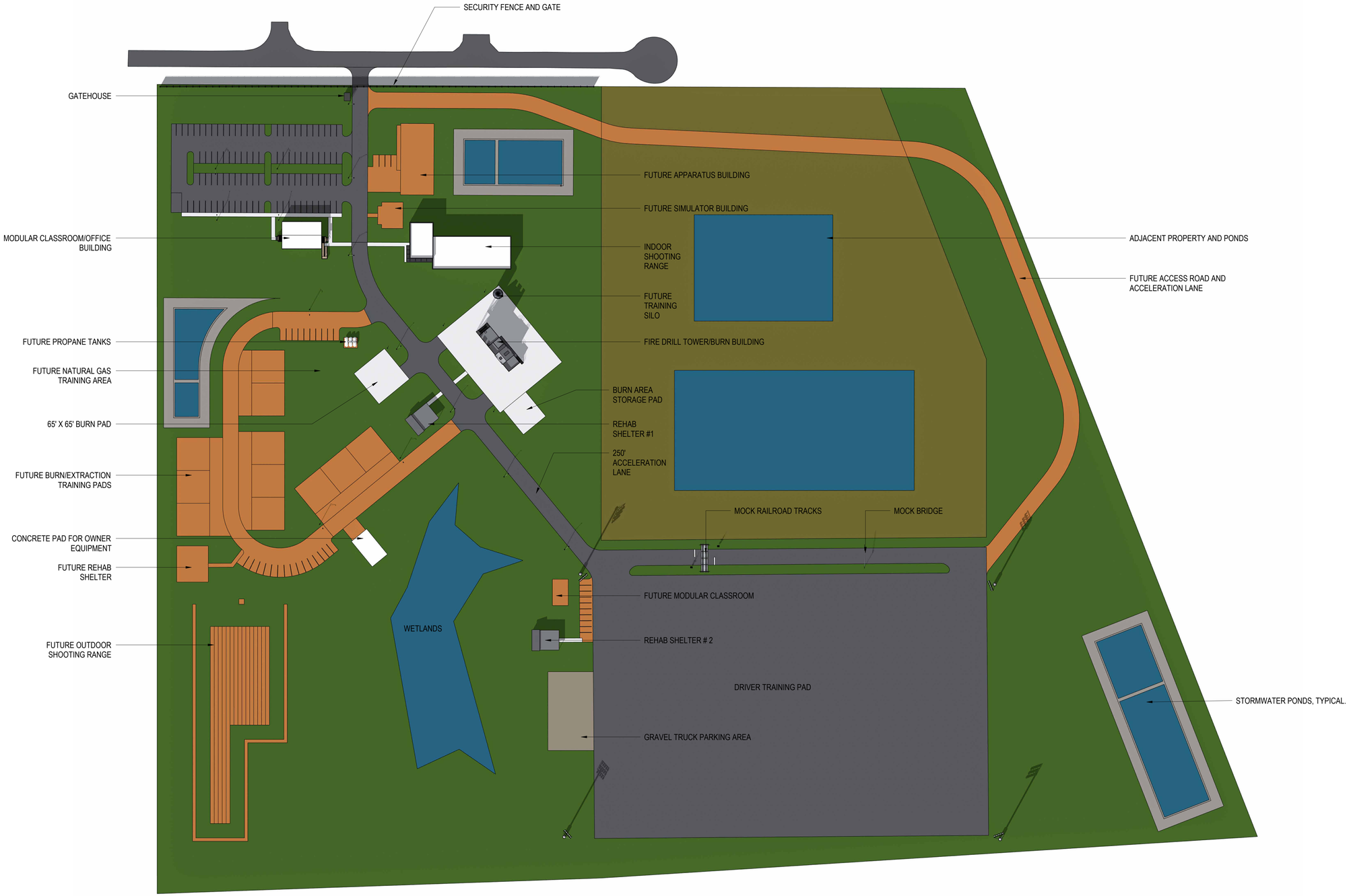

ARCHITECTURAL SITE PLAN

SCALE: 1" = 100'-0"

PLAN NORTH

0 100' 200' 300' 400'

WALKER the GROUP ARCHITECTURE incorporated
PO BOX 541, NEW BERN, NC 28563
252-636-8778

Christopher B. Walker REGISTERED SEAL 15616 07/28/25 ARCHITECT NORTH CAROLINA

THE WALKER GROUP ARCHITECTURE INCORPORATED REGISTERED ARCHITECTURAL CORPORATION CERT. NO. 51132 NORTH CAROLINA NEW BERN, NC

CRAVEN COMMUNITY COLLEGE-PUBLIC SAFETY TRAINING CENTER

525 Executive Pkwy
New Bern, NC 28562

Bid Documents

SCO # 24-27879-01A

Revisions

No.	Date

Project Number: 2407.SAFE
Date: 07/28/25
Drawn: TRA
Checked: CBW
Scale: AS NOTED

Drawing Title

ARCHITECTURAL SITE PLAN

Sheet Number: 87 Of 158

Drawing Number: A-100

Indoor range component Manufacturer shall ensure electrical Components, Devices, and Accessories: Listed and labeled as defined in NFPA 70, Article 100, by a third-party testing agency. Third party agencies shall be one of those accredited by the NCBCC (North Carolina Building Code Council) to label electrical and mechanical equipment and marked for intended use

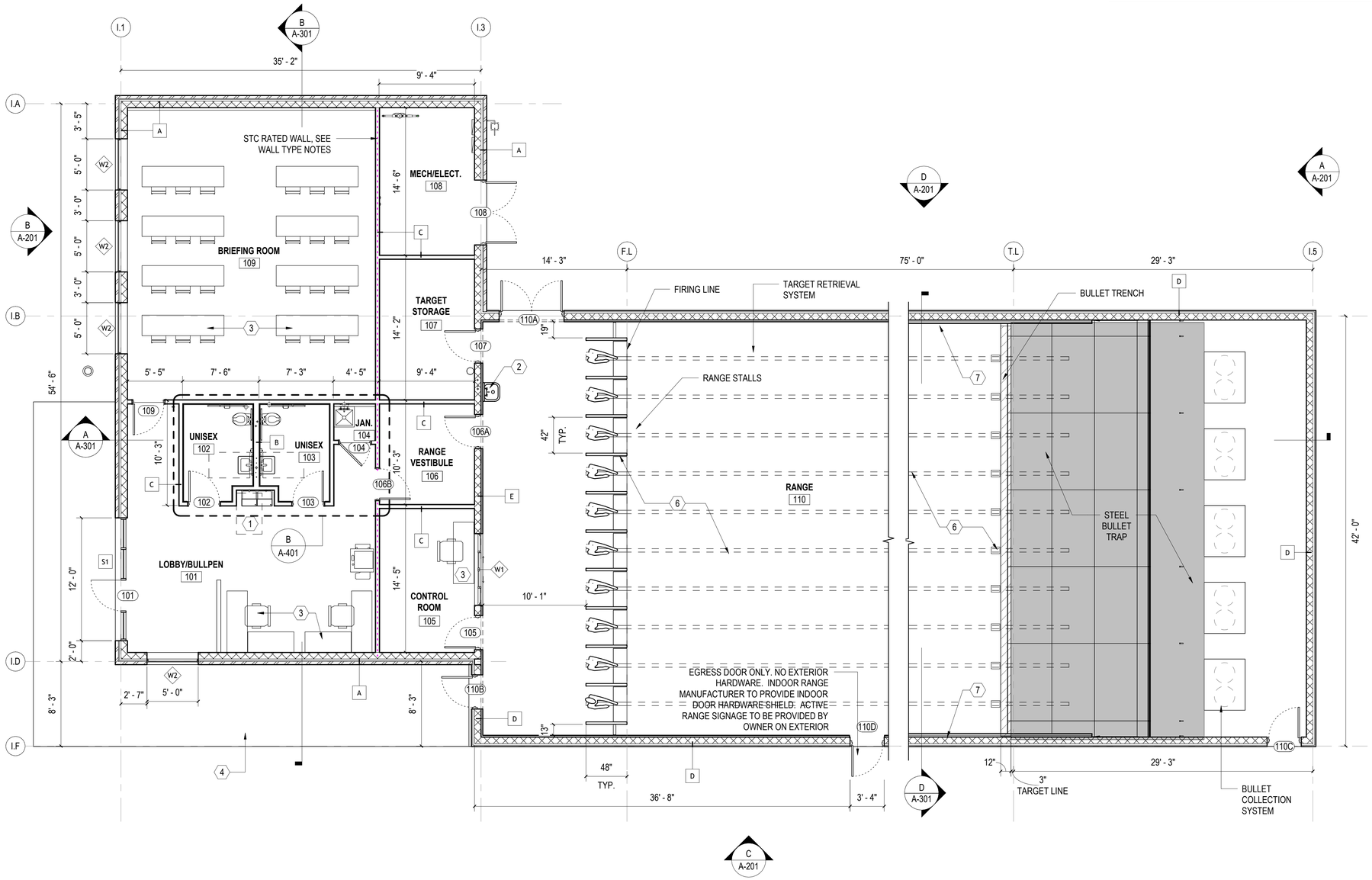

INDOOR RANGE FLOOR PLAN

SCALE: 3/16" = 1'-0"

PLAN NORTH

GENERAL SHEET NOTES

1. SEE CIVIL, STRUCTURAL, MECHANICAL, ELECTRICAL, AND PLUMBING DRAWINGS FOR ADDITIONAL NOTES.
2. SEE SCHEDULES FOR WALL TYPES, DOOR/FRAME/WINDOW TYPES AND SIZES, AND FLOOR/WALL/CEILING FINISHES.
3. PROTECT EXISTING ITEMS TO REMAIN.

KEYNOTES

MARK	DESCRIPTION
1	HI-LOW WATER COOLER, SEE PLUMBING.
2	WALL HUNG SINK. SEE PLUMBING.
3	FURNITURE PROVIDED BY OWNER, TYPICAL.
4	CONCRETE SIDEWALK. SEE CIVIL.
6	INDOOR RANGE EQUIPMENT INCLUDING; RANGE STALLS, TARGET RETRIEVAL SYSTEM, CONTROL SYSTEM, STEEL BULLET TRAP, BULLET COLLECTION AND DUST CONTAINMENT, CEILING BAFFLES, AND COMPLETE RANGE HVAC SYSTEM. DESIGNED/PROVIDED AND INSTALLED BY RANGE COMPONENT MANUFACTURER. SEE OWNER PREFERRED ALTERNATE 06 ON SHEET GI001.
7	COMBAT WALL BAFFLES, DESIGNED/PROVIDED AND INSTALLED BY RANGE COMPONENT MANUFACTURER. SEE OWNER PREFERRED ALTERNATE 06 ON SHEET GI001.

RANGE FINISH SCHEDULE

NUMBER	NAME	FLOOR	BASE	WALL	CEILING	COMMENTS
101	FOYER	LVT	RUB	GYP. B.D. PAIINT	ACT	
102	BRIEFING ROOM	LVT	RUB	CMU	ACT	
103	UNISEX	TILE	TILE	TILE	GYP. BD.	WALL TILE TO 5'-0"
104	ELECTRICAL/ TELECOM	S.CONC.	RUB	CMU	-	
105	VESTIBULE	LVT	RUB	CMU	ACT	
106	CONTROL ROOM	LVT	RUB	CMU	ACT	
107	STORAGE	S.CONC.	RUB	CMU	ACT	
108	RANGE	CONC.	-	CMU	-	CEILING BAFFLES
109	BULLET TRAP	CONC.	-	CMU	-	

RANGE WALL TYPES LEGEND

MARK	NOTES
A	1-1/2" METAL CLADDING, VAPOR BARRIER, 2" POLYISOCYANURATE INSULATION, 8" REINFORCED CMU. (PROVIDE SPLIT FACE BLOCK VENEER WAINSCOT IN LIEU OF METAL PANEL TO 5'-0" A.F.F)
B	6" METAL STUDS @ 16" O.C. WITH 5/8" GYPSUM BOARD EACH SIDE. FULL HEIGHT TO 6" ABOVE CEILING. EXTEND STUDS AT 4'-0" O.C. TO STRUCTURE ABOVE.
C	3-5/8" METAL STUDS @ 16" O.C. WITH 5/8" GYPSUM BOARD EACH SIDE. TAPE, TEXTURE, AND PAINT. FULL HEIGHT TO 6" ABOVE CEILING. EXTEND STUDS AT 4'-0" O.C. TO STRUCTURE ABOVE.
D	1-1/2" METAL CLADDING, VAPOR BARRIER, 2" POLYISOCYANURATE INSULATION, 8" REINFORCED CMU. CMU CELLS SHALL BE FULLY GROUTED AT RANGE.
E	8" REINFORCED FULL HEIGHT CMU WALL. PROVIDE INSULATION AND METAL PANELS FROM LOWER ROOF TO UPPER ROOF. CMU CELLS SHALL BE FULLY GROUTED AT RANGE.

WALL TYPE NOTES:

1. PROVIDE 5/8" CEMENT BACKER BOARD (IN LIEU OF GYPSUM BOARD) AND PORCELAIN TILE AT WAINSCOT LOCATIONS (HEIGHT 5'-0") IN BATHROOMS.

2. STC-55 WALL ASSEMBLY; 3 5/8" STEEL STUDS 20 GA. 24" O.C., 3 1/2" GLASS FIBER INSULATION, 5/8" GYPSUM BOARD ON ONE SIDE AND 5/8" SOUNDBREAK XP GYPSUM BOARD ON THE OTHER.

3. RANGE SIDE AND BACK WALLS TO BE TREATED WITH POROUS EXPANDED POLYPROPYLENE (PEPP) ACOUSTICAL PANELING TO 10'-0". TREATMENT DESIGNED/PROVIDED AND INSTALLED BY RANGE COMPONENT MANUFACTURER. SEE OWNER PREFERRED ALTERNATE 06 ON SHEET GI001.

GRAPHIC SCALE(S)

3/16" =1'-0" 0' 4' 8' 12'

WALKER the GROUP ARCHITECTURE incorporated
PO BOX 541, NEW BERN, NC 28563
252-636-8778

Christopher B. Walker REGISTERED SEAL 15616 07/28/25 ARCHITECT NORTH CAROLINA

THE WALKER GROUP ARCHITECTURE INCORPORATED REGISTERED ARCHITECTURAL CORPORATION CERT. NO. 51132 NORTH CAROLINA NEW BERN, NC

CRAVEN COMMUNITY COLLEGE-PUBLIC SAFETY TRAINING CENTER

525 Executive Pkwy
New Bern, NC 28562

Bid Documents

SCO # 24-27879-01A

Revisions

No.	Date

Project Number: 2407.SAFE
Date: 07/28/25
Drawn: TRA
Checked: CBW
Scale: AS NOTED
Drawing Title: INDOOR RANGE FLOOR PLAN

Sheet Number: 88 Of 158

Drawing Number: A-101

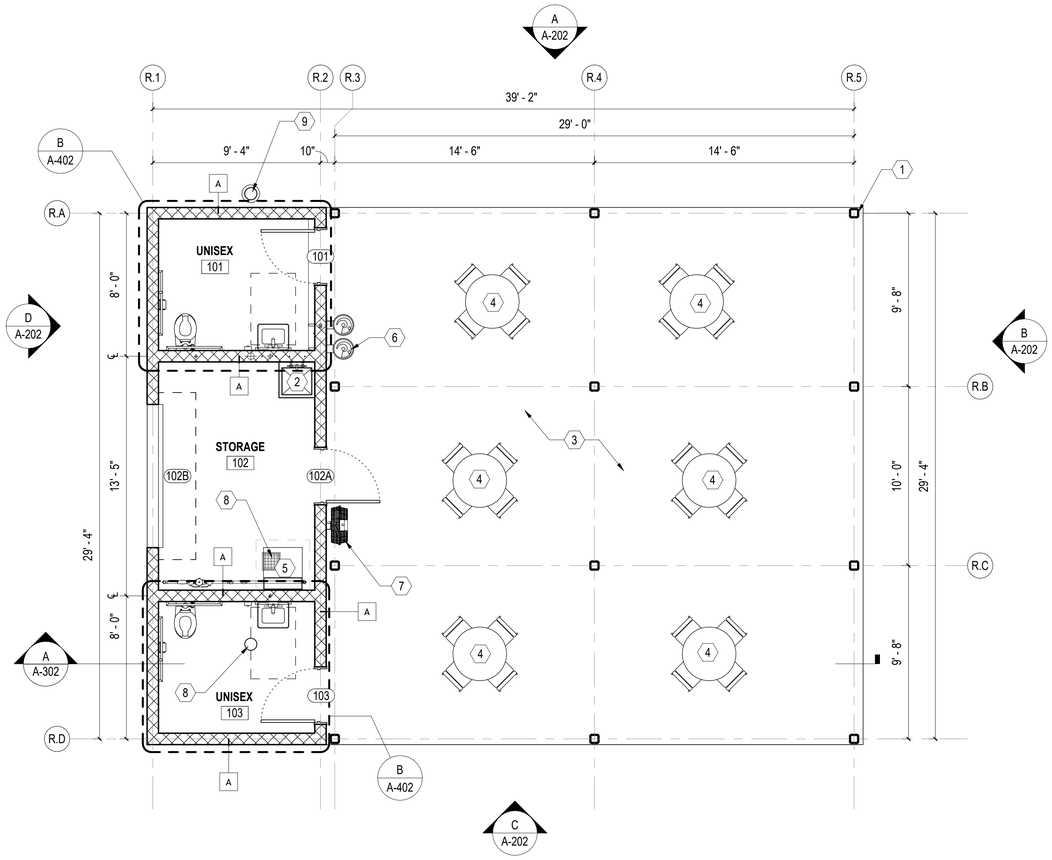

REHAB SHELTER FLOOR PLAN

SCALE: 1/4" = 1'-0"

PLAN NORTH

GENERAL SHEET NOTES

1. SEE CIVIL, STRUCTURAL, MECHANICAL, ELECTRICAL, AND PLUMBING DRAWINGS FOR ADDITIONAL NOTES.
2. SEE SCHEDULES FOR WALL TYPES, DOOR/FRAME/WINDOW TYPES AND SIZES, AND FLOOR/WALL/CEILING FINISHES.
3. PROTECT EXISTING ITEMS TO REMAIN.

NEW WORK KEYNOTES

MARK	DESCRIPTION
1	30'x30' PRE-FINISHED METAL CANOPY. PROVIDED AND INSTALLED BY OWNER.
2	MOP SINK. SEE PLUMBING.
3	6" CONCRETE PAD AND FOUNDATION. SEE STRUCTURAL.
4	OUTDOOR TABLES AND CHAIRS PROVIDED BY OWNER.
5	ICE MACHINE PROVIDED BY OWNER.
6	HI-LOW WATER COOLER, SEE PLUMBING.
7	WALL MOUNTED FAN, SEE MECHANICAL.
8	FLOOR DRAIN, SEE PLUMBING.
9	PLUMBING CLEANOUT. SEE PLUMBING.

NOTE: WORK RELATED TO REHAB SHELTERS IS CONSIDERED BID ALTERNATE 03, SEE SHEET GI001.

REHAB FINISH SCHEDULE

NUMBER	NAME	FLOOR	BASE	WALL	CEILING	COMMENTS
101	STORAGE	S.CONC.	-	CMU-PAINT	GYP. BD.	
102	UNISEX BATHROOM	TILE	TILE	CMU-PAINT	GYP. BD.	
103	UNISEX BATHROOM	TILE	TILE	CMU-PAINT	GYP. BD.	

REHAB WALL TYPE LEGEND

MARK	NOTES
A	8" REINFORCED CMU. SEE STRUCTURAL.

GRAPHIC SCALE(S)

3/8" =1'-0" 0' 2' 4' 6'

WALKER the GROUP ARCHITECTURE incorporated
PO BOX 541, NEW BERN, NC 28563
252-636-8778

Christopher B. Walker REGISTERED SEAL 15616 07/28/25 ARCHITECT NORTH CAROLINA

THE WALKER GROUP ARCHITECTURE INCORPORATED REGISTERED ARCHITECTURAL CORPORATION CERT. NO. 51132 NORTH CAROLINA NEW BERN, NC

CRAVEN COMMUNITY COLLEGE-PUBLIC SAFETY TRAINING CENTER

525 Executive Pkwy
New Bern, NC 28562

Bid Documents

SCO # 24-27879-01A

Revisions

No.	Date

Project Number: 2407.SAFE
Date: 07/28/25
Drawn: TRA
Checked: CBW
Scale: AS NOTED

Drawing Title

REHAB SHELTER FLOOR PLAN

Sheet Number: 89 Of 158

Drawing Number: A-102

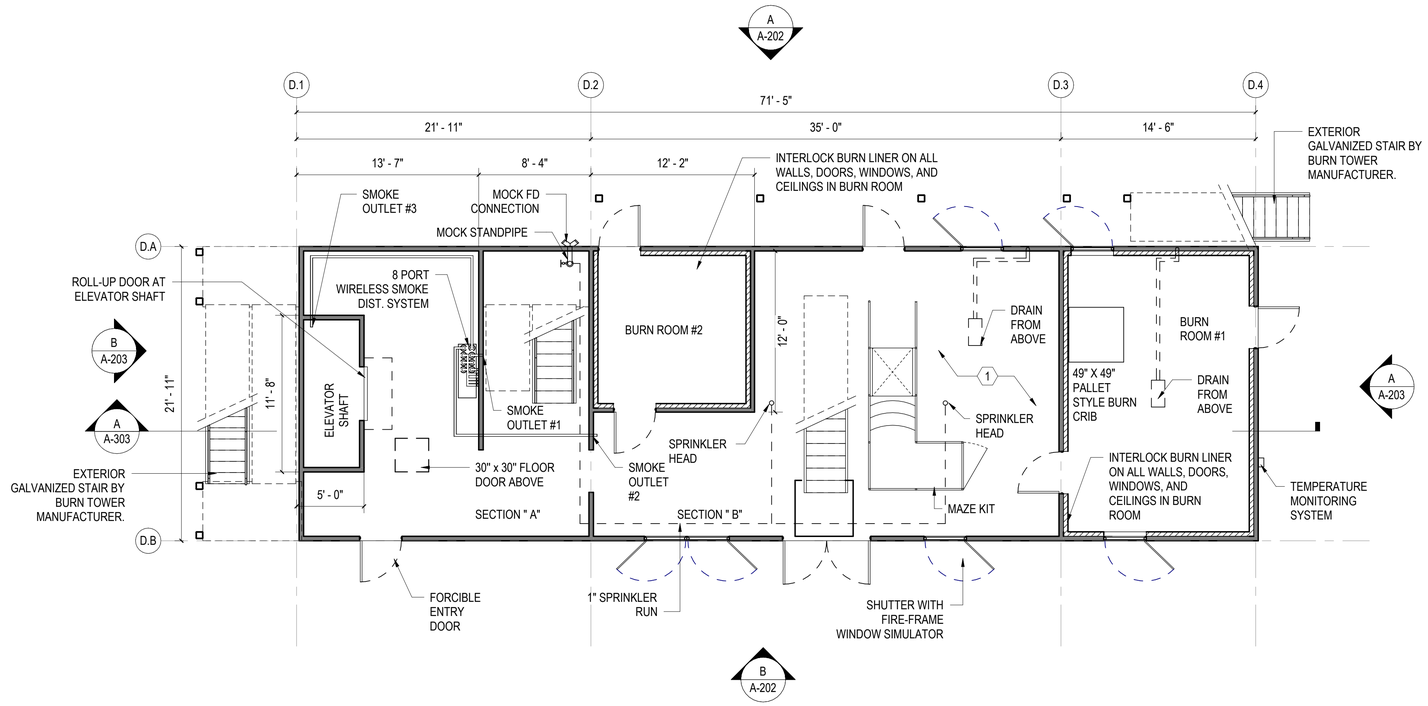

DRILL/BURN TOWER 1ST FLOOR PLAN

SCALE: 3/16" = 1'-0"

PLAN NORTH

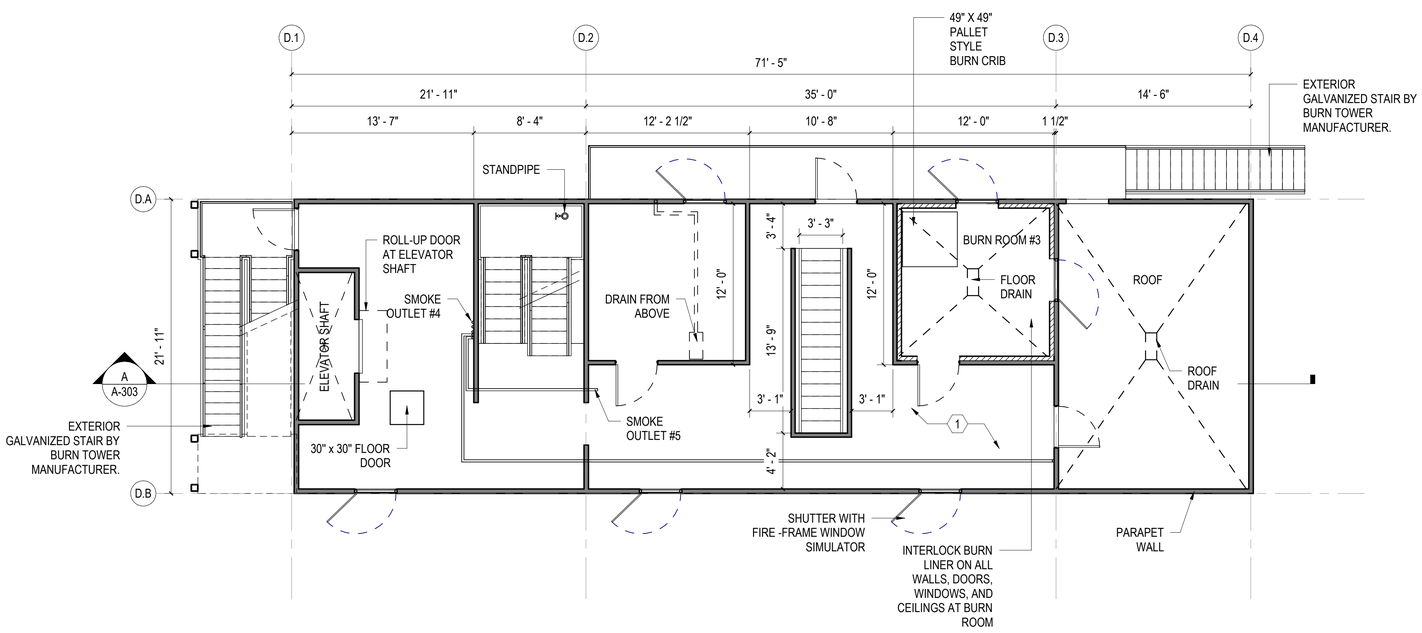

DRILL/BURN TOWER 2ND FLOOR PLAN

SCALE: 3/16" = 1'-0"

PLAN NORTH

GENERAL SHEET NOTES

1. SEE CIVIL, STRUCTURAL, MECHANICAL, ELECTRICAL, AND PLUMBING DRAWINGS FOR ADDITIONAL NOTES.
2. SEE SCHEDULES FOR WALL TYPES, DOOR/FRAME/WINDOW TYPES AND SIZES, AND FLOOR/WALL/CEILING FINISHES.
3. PROTECT EXISTING ITEMS TO REMAIN.

KEYNOTES

MARK	DESCRIPTION
1	DRILL/BURN TRAINING TOWER PROVIDED AND INSTALLED BY MANUFACTURER. GENERAL CONTRACTOR TO PROVIDE FOUNDATION, CONCRETE FLOORS WITHIN TOWER (PER MANUFACTURER) AND ELECTRICAL.

NOTE: WORK RELATED TO BURN/DRILL TOWER IS CONSIDERED BID ALTERNATE 01, SEE SHEET GI001.

GRAPHIC SCALE(S)

3/16" =1'-0" 0' 4' 8' 12'

WALKER the GROUP ARCHITECTURE incorporated
PO BOX 541, NEW BERN, NC 28563
252-636-8778

Christopher B. Walker REGISTERED SEAL 15616 07/28/25 ARCHITECT NORTH CAROLINA

THE WALKER GROUP ARCHITECTURE INCORPORATED REGISTERED ARCHITECTURAL CORPORATION CERT. NO. 51132 NORTH CAROLINA NEW BERN, NC

CRAVEN COMMUNITY COLLEGE-PUBLIC SAFETY TRAINING CENTER

525 Executive Pkwy
New Bern, NC 28562

Bid Documents

SCO # 24-27879-01A

Revisions

No.	Date

Project Number: 2407.SAFE
Date: 07/28/25
Drawn: TRA
Checked: CBW
Scale: AS NOTED

Drawing Title

DRILL/BURN TOWER FLOOR PLANS

Sheet Number: 90 Of 158

Drawing Number

A-103

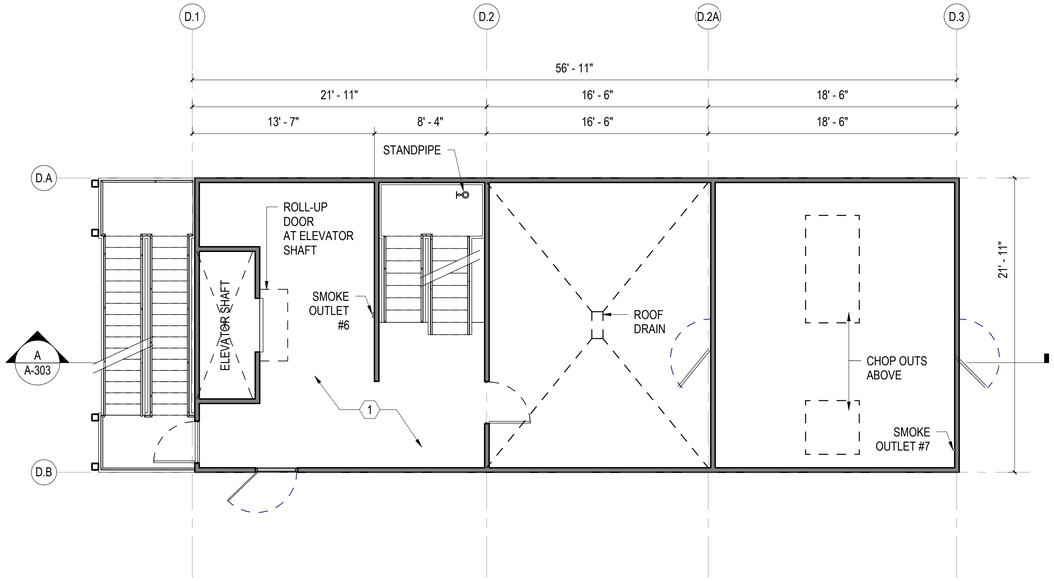

DRILL/BURN TOWER 3RD/ATTIC FLOOR PLAN

SCALE: 3/16" = 1'-0"

PLAN NORTH

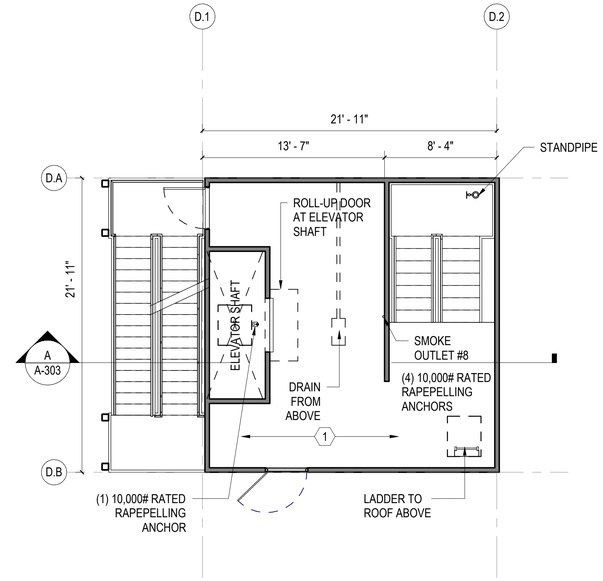

DRILL/BURN TOWER 4TH FLOOR PLAN

SCALE: 3/16" = 1'-0"

PLAN NORTH

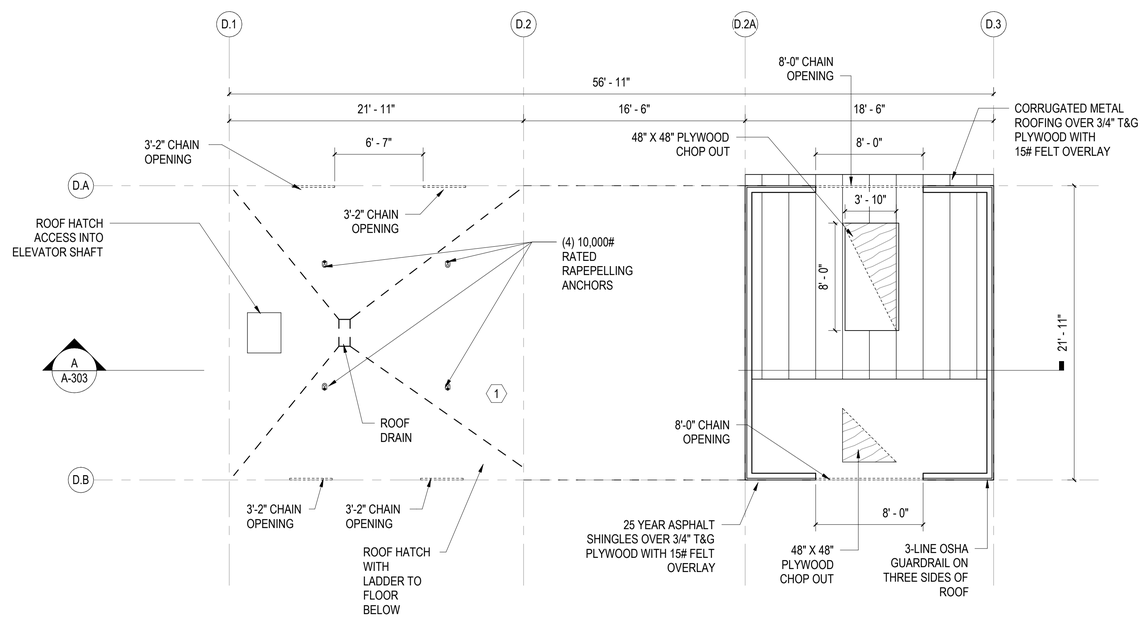

DRILL/BURN TOWER ROOF PLAN

SCALE: 3/16" = 1'-0"

PLAN NORTH

GENERAL SHEET NOTES

1. SEE CIVIL, STRUCTURAL, MECHANICAL, ELECTRICAL, AND PLUMBING DRAWINGS FOR ADDITIONAL NOTES.
2. SEE SCHEDULES FOR WALL TYPES, DOOR/FRAME/WINDOW TYPES AND SIZES, AND FLOOR/WALL/CEILING FINISHES.
3. PROTECT EXISTING ITEMS TO REMAIN.

NEW WORK KEYNOTES

MARK	DESCRIPTION
1	DRILL/BURN TRAINING TOWER PROVIDED AND INSTALLED BY MANUFACTURER. GENERAL CONTRACTOR TO PROVIDE FOUNDATION, CONCRETE FLOORS WITHIN TOWER (PER MANUFACTURER) AND ELECTRICAL.

NOTE: WORK RELATED TO BURN/DRILL TOWER IS CONSIDERED BID ALTERNATE 01, SEE SHEET GI001.

GRAPHIC SCALE(S)

3/16" =1'-0" 0' 4' 8' 12'

WALKER the GROUP ARCHITECTURE incorporated
PO BOX 541, NEW BERN, NC 28563
252-636-8778

Christopher B. Walker REGISTERED SEAL 15616 07/28/25 ARCHITECT NORTH CAROLINA

THE WALKER GROUP ARCHITECTURE INCORPORATED REGISTERED ARCHITECTURAL CORPORATION CERT. NO. 51132 NORTH CAROLINA NEW BERN, NC

CRAVEN COMMUNITY COLLEGE-PUBLIC SAFETY TRAINING CENTER

525 Executive Pkwy
New Bern, NC 28562

Bid Documents

SCO # 24-27879-01A

Revisions

No.	Date

Project Number: 2407.SAFE
Date: 07/28/25
Drawn: TRA
Checked: CBW
Scale: AS NOTED

Drawing Title

DRILL/BURN TOWER FLOOR PLANS

Sheet Number: 91 Of 158

Drawing Number: A-104

NOTE: MODULAR BUILDING SHALL BE REVIEWED AND APPROVED BY DEPARTMENT OF INSURANCE OFFICE OF STATE FIRE MARSHALL FOR ALL LIFE SAFETY, MECHANICAL, ELECTRICAL, AND PLUMBING SYSTEMS PRIOR TO BEING DELIVERED TO PROJECT SITE .

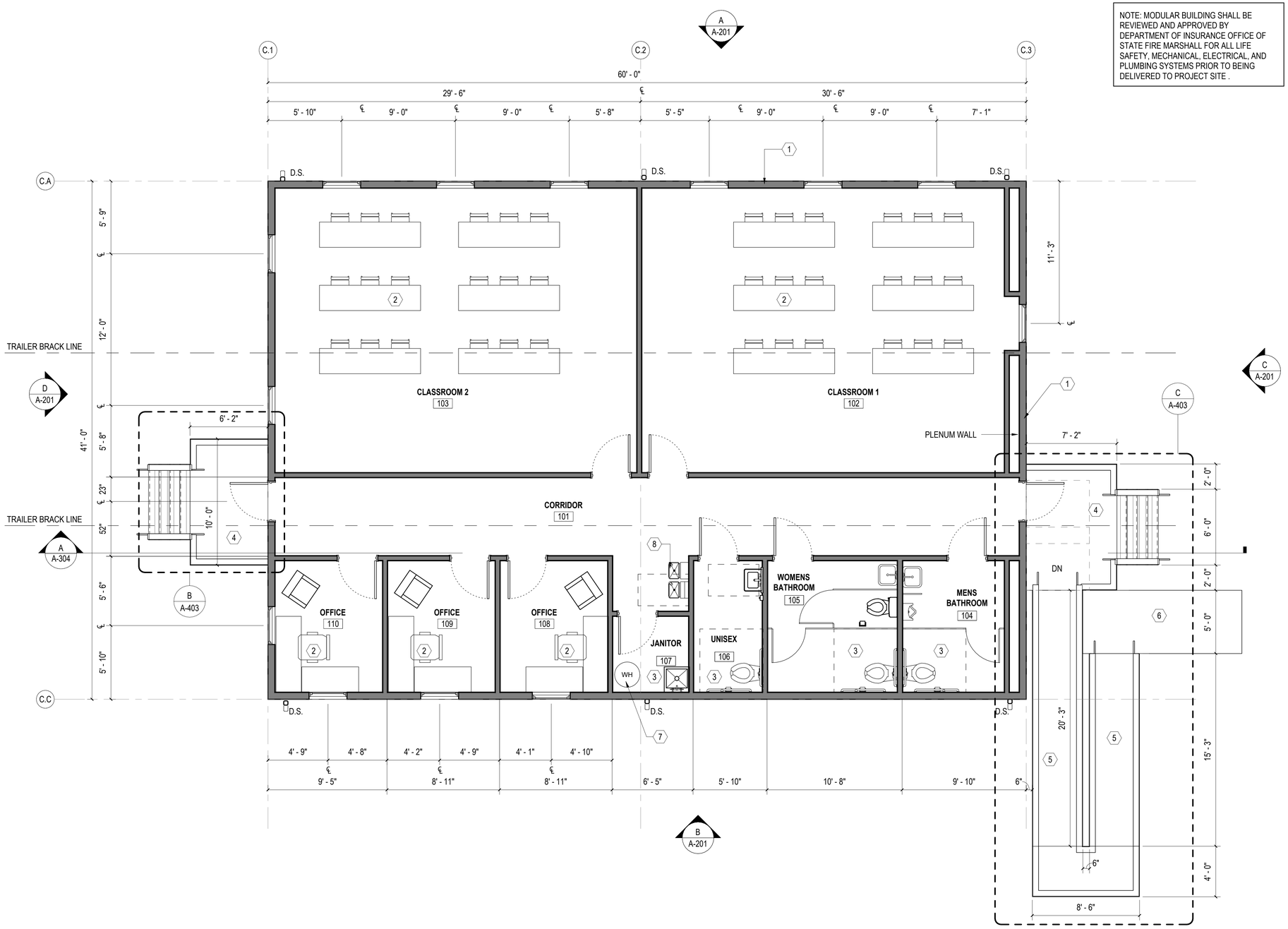

MODULAR CLASSROOM FLOOR PLAN

SCALE: 1/4" = 1'-0"

PLAN NORTH

GENERAL SHEET NOTES

1. SEE CIVIL, STRUCTURAL, MECHANICAL, ELECTRICAL, AND PLUMBING DRAWINGS FOR ADDITIONAL NOTES.
2. SEE SCHEDULES FOR WALL TYPES, DOOR/FRAME/WINDOW TYPES AND SIZES, AND FLOOR/WALL/CEILING FINISHES.
3. PROTECT EXISTING ITEMS TO REMAIN.

NEW WORK KEYNOTES

MARK	DESCRIPTION
1	MODULAR CLASSROOM BUILDING PROVIDED AN INSTALLED BY MANUFACTURER.
2	FURNITURE PROVIDED BY OWNER, TYPICAL.
3	PLUMBING FIXTURES BY MODULAR BUILDING PROVIDER. CONTRACTOR TO COORDINATE CONNECTIONS.
4	P.T. WOOD DECK AND COMPOSITE DECKING BY GENERAL CONTRACTOR. P.T. 2x10 WOOD JOISTS @ 16" O.C., DECK CONSTRUCTION BASED ON 100 PSF LIVE LOAD MINIMUM.
5	P.T. WOOD FRAMED ACCESSIBLE RAMP WITH COMPOSITE DECKING BY GENERAL CONTRACTOR. RAMP CONSTRUCTION BASED ON 100 PSF LIVE LOAD MINIMUM.
6	CONCRETE SIDEWALK. SEE CIVIL.
7	WATER HEATER, PROVIDED BY MODULAR BUILDING MANUFACTURER. CONTRACTOR TO COORDINATE CONNECTIONS
8	ACCESSIBLE WATER COOLER, PROVIDED BY MODULAR BUILDING MANUFACTURER.

NOTE: WORK RELATED TO MODULAR CLASSROOM AND STAIRS/RAMPS IS CONSIDERED BID ALTERNATE 02, SEE SHEET GI001.

GRAPHIC SCALE(S)

1/4" =1'-0" 0' 2' 4' 8'

WALKER the GROUP ARCHITECTURE incorporated
PO BOX 541, NEW BERN, NC 28563
252-636-8778

Christopher B. Walker REGISTERED SEAL 15616 07/28/25 ARCHITECT NORTH CAROLINA

THE WALKER GROUP ARCHITECTURE INCORPORATED REGISTERED ARCHITECTURAL CORPORATION CERT. NO. 51132 NORTH CAROLINA NEW BERN, NC

CRAVEN COMMUNITY COLLEGE-PUBLIC SAFETY TRAINING CENTER

525 Executive Pkwy
New Bern, NC 28562

Bid Documents

SCO # 24-27879-01A

Revisions

No.	Date

Project Number: 2407.SAFE
Date: 07/28/25
Drawn: TRA
Checked: CBW
Scale: AS NOTED

Drawing Title

MODULAR CLASSROOM FLOOR PLAN

Sheet Number: 92 Of 158

Drawing Number

A-105

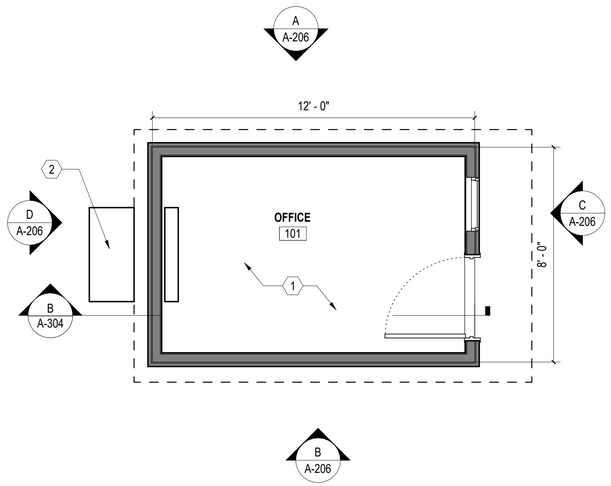

GATEHOUSE FLOOR PLAN

SCALE: 3/8" = 1'-0"

PLAN NORTH

GENERAL SHEET NOTES

1. SEE CIVIL, STRUCTURAL, MECHANICAL, ELECTRICAL, AND PLUMBING DRAWINGS FOR ADDITIONAL NOTES.
2. SEE SCHEDULES FOR WALL TYPES, DOOR/FRAME/WINDOW TYPES AND SIZES, AND FLOOR/WALL/CEILING FINISHES.
3. PROTECT EXISTING ITEMS TO REMAIN.

NEW WORK KEYNOTES

MARK	DESCRIPTION
1	PRE-BUILT GATEHOUSE PROVIDED AND INSTALLED BY OWNER. CONCRETE PAD AND FOUNDATION BY GENERAL CONTRACTOR, STRUCTURAL. MECHANICAL AND ELECTRICAL BY GENERAL CONTRACTOR.
2	DUCTLESS SPLIT SYSTEM, SEE MECHANICAL.

NOTE: WORK RELATED TO GATEHOUSE BUILDING IS CONSIDERED BID ALTERNATE 05, SEE SHEET GI001.

GRAPHIC SCALE(S)

3/8" =1'-0" 0' 2' 4' 6'

WALKER the GROUP ARCHITECTURE incorporated
PO BOX 541, NEW BERN, NC 28563
252-636-8778

Christopher B. Walker REGISTERED SEAL 15616 07/28/25 ARCHITECT NORTH CAROLINA

THE WALKER GROUP ARCHITECTURE INCORPORATED REGISTERED ARCHITECTURAL CORPORATION CERT. NO. 51132 NORTH CAROLINA NEW BERN, NC

CRAVEN COMMUNITY COLLEGE-PUBLIC SAFETY TRAINING CENTER

525 Executive Pkwy
New Bern, NC 28562

Bid Documents

SCO # 24-27879-01A

Revisions

No.	Date

Project Number: 2407.SAFE
Date: 07/28/25
Drawn: TRA
Checked: CBW
Scale: AS NOTED

Drawing Title

GATEHOUSE BUILDING FLOOR PLANS

Sheet Number: 93 Of 158

Drawing Number

A-106

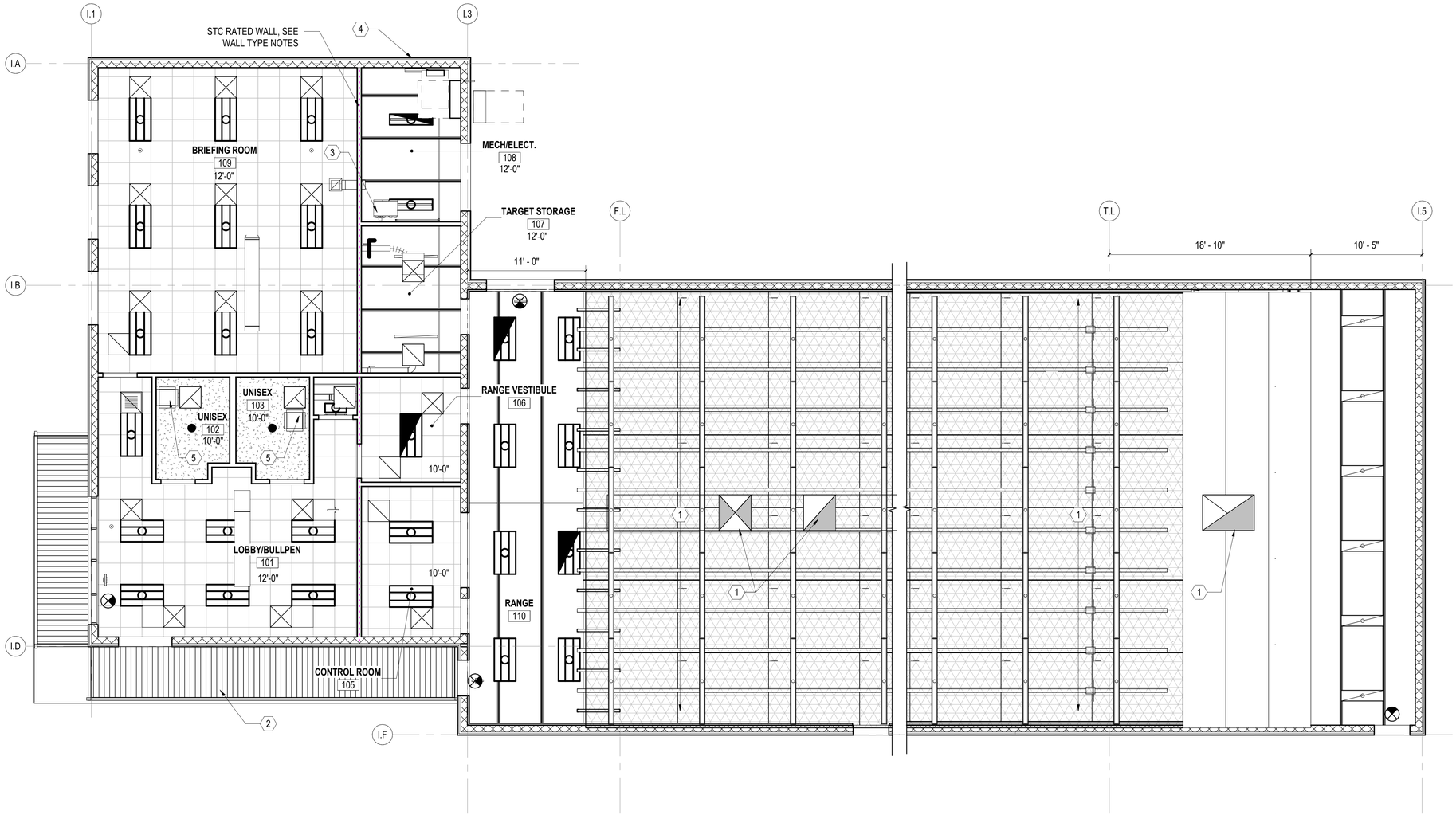

INDOOR RANGE CEILING PLAN

SCALE: 3/16" = 1'-0"

PLAN NORTH

GENERAL SHEET NOTES

1. SEE CIVIL, STRUCTURAL, MECHANICAL, ELECTRICAL, AND PLUMBING DRAWINGS FOR ADDITIONAL NOTES.
2. SEE SCHEDULES FOR WALL TYPES, DOOR/FRAME/WINDOW TYPES AND SIZES, AND FLOOR/WALL/CEILING FINISHES.
3. PROTECT EXISTING ITEMS TO REMAIN.

NEW WORK KEYNOTES

MARK	DESCRIPTION
1	INDOOR RANGE EQUIPMENT INCLUDING; RANGE STALLS, TARGET RETRIEVAL SYSTEM, CONTROL SYSTEM, STEEL BULLET TRAP, BULLET COLLECTION AND DUST CONTAINMENT, CEILING/WALL BAFFLES, AND COMPLETE RANGE HVAC SYSTEM. DESIGNED/PROVIDED AND INSTALLED BY RANGE COMPONENT MANUFACTURER. SEE OWNER PREFERRED ALTERNATE 06 ON SHEET GI001.
2	PRE-FINISHED OVERHEAD SUPPORTED METAL CANOPY. INSTALL PER MANUFACTURERS RECOMMENDATION. SEE DETAILS ON A-501.
3	UNIT HEATER, VENT PIPING, COMBUSTION PIPING AND HANGERS, SEE MECHANICAL.
4	WALL LOUVER, SEE MECHANICAL.
5	18"x18" CEILING MOUNTED ACCESS PANEL.

REFLECTED CEILING PLAN LEGEND

SYMBOL	DESCRIPTION
	ACOUSTICAL CEILING GRID, TILES, AND HANGERS, SEE DETAIL F&G/A-503.
	GYPSUM BOARD CEILING. SEE DETAIL E/A-503.
	SUSPENDED BALLISTIC CEILING BAFFLES BY RANGE COMPONENT MANUFACTURER. SEE OWNER PREFERRED ALTERNATE 06 ON SHEET GI001.
	EXPOSED STEEL DECKING ABOVE ROOF JOIST, PAINT DECKING WHERE EXPOSED.
(X'-X")	FINISHED CEILING HEIGHT ABOVE FINISHED FLOOR
	LIGHT FIXTURE. REFER TO ELECTRICAL DRAWINGS.
	EXIT SIGN, REFER TO ELECTRICAL DRAWING, LIFE SAFETY PLAN
	CEILING SUPPLY DIFFUSER. REFER TO MECHANICAL DRAWINGS.
	CEILING RETURN OR EXHAUST. REFER TO MECHANICAL DRAWINGS.

GRAPHIC SCALE(S)

3/16" =1'-0" 0' 4' 8' 12'

WALKER the GROUP ARCHITECTURE incorporated
PO BOX 541, NEW BERN, NC 28563
252-636-8778

Christopher B. Walker REGISTERED SEAL 15616 07/28/25 ARCHITECT NORTH CAROLINA

THE WALKER GROUP ARCHITECTURE INCORPORATED REGISTERED ARCHITECTURAL CORPORATION CERT. NO. 51132 NORTH CAROLINA NEW BERN, NC

CRAVEN COMMUNITY COLLEGE-PUBLIC SAFETY TRAINING CENTER

525 Executive Pkwy
New Bern, NC 28562

Bid Documents

SCO # 24-27879-01A

Revisions

No.	Date

Project Number: 2407.SAFE
Date: 07/28/25
Drawn: TRA
Checked: CBW
Scale: AS NOTED

Drawing Title

INDOOR RANGE REFLECTED CEILING PLAN

Sheet Number: 94 Of 158

Drawing Number

A-107

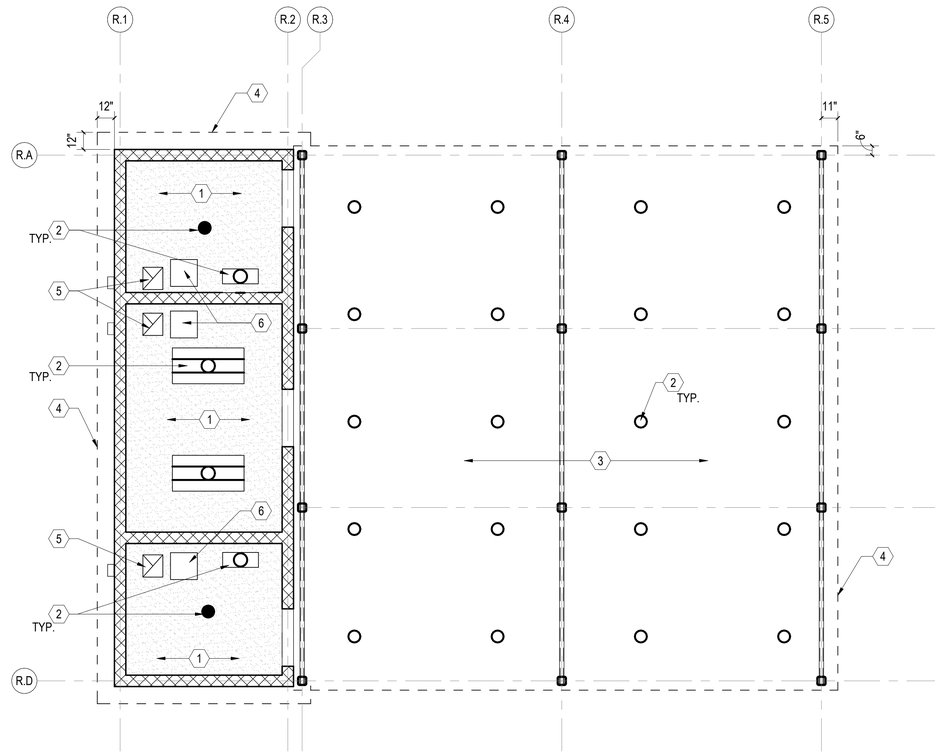

REHAB SHELTER REFLECTED CEILING PLAN

SCALE: 1/4" = 1'-0"

PLAN NORTH

GENERAL SHEET NOTES

1. SEE CIVIL, STRUCTURAL, MECHANICAL, ELECTRICAL, AND PLUMBING DRAWINGS FOR ADDITIONAL NOTES.
2. SEE SCHEDULES FOR WALL TYPES, DOOR/FRAME/WINDOW TYPES AND SIZES, AND FLOOR/WALL/CEILING FINISHES.
3. PROTECT EXISTING ITEMS TO REMAIN.

NEW WORK KEYNOTES

MARK	DESCRIPTION
1	5/8" GYPSUM BOARD ATTACHED TO UNDERSIDE OF ROOFING SYSTEM. PAINT.
2	LIGHTING, SEE ELECTRICAL.
3	30'x30' PRE-FINISHED METAL CANOPY. PROVIDED AND INSTALLED BY OWNER. CONTRACTOR TO COORDINATE FOUNDATION.
4	EDGE OF ROOF.
5	EXHAUST FAN, DUCTWORK, HANGERS, SUPPORTS, AND WALL CAP, SEE MECHANICAL.
6	18"x18" CEILING MOUNTED ACCESS PANEL.

NOTE: WORK RELATED TO REHAB BUILDINGS IS CONSIDERED BID ALTERNATE 03, SEE SHEET GI001.

GRAPHIC SCALE(S)

1/4" =1'-0" 0' 2' 4' 8'

WALKER the GROUP ARCHITECTURE incorporated
PO BOX 541, NEW BERN, NC 28563
252-636-8778

Christopher B. Walker REGISTERED SEAL 15616 07/28/25 ARCHITECT NORTH CAROLINA

THE WALKER GROUP ARCHITECTURE INCORPORATED REGISTERED ARCHITECTURAL CORPORATION CERT. NO. 51132 NORTH CAROLINA NEW BERN, NC

CRAVEN COMMUNITY COLLEGE-PUBLIC SAFETY TRAINING CENTER

525 Executive Pkwy
New Bern, NC 28562

Bid Documents

SCO # 24-27879-01A

No.	Date	Revisions

Project Number: 2407.SAFE
Date: 07/28/25
Drawn: TRA
Checked: CBW
Scale: AS NOTED
Drawing Title:

REHAB SHELTER REFLECTED CEILING PLAN

Sheet Number: 95 Of 158

Drawing Number: A-108

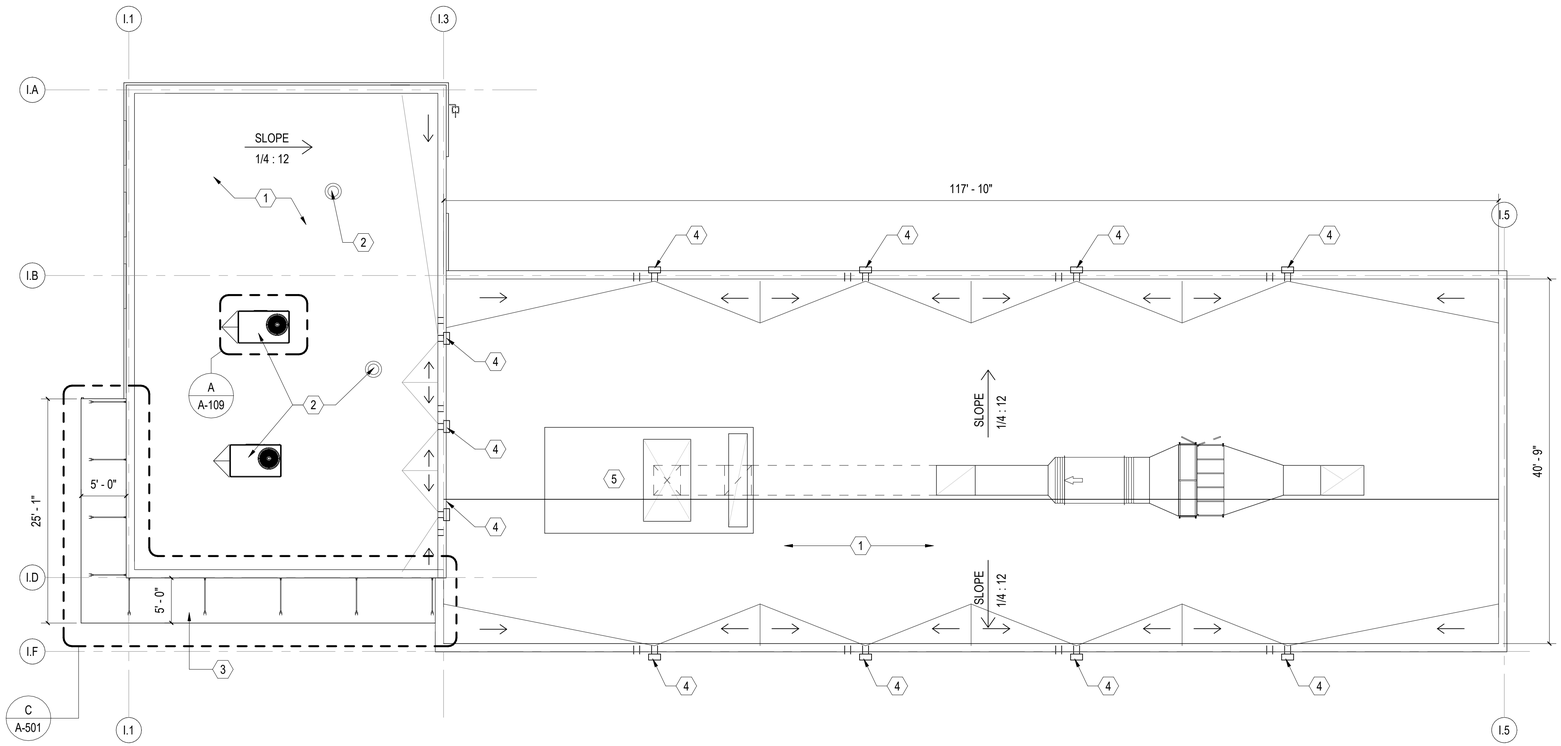

INDOOR RANGE ROOF PLAN

SCALE: 1/8" = 1'-0"

PLAN NORTH

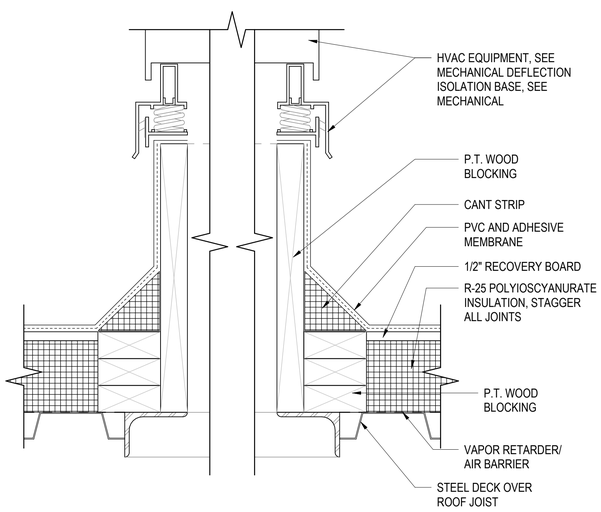

A MECHANICAL EQUIPMENT CURB DETAIL

SCALE: 3" = 1'-0" (A-109)

GENERAL SHEET NOTES

1. SEE CIVIL, STRUCTURAL, MECHANICAL, ELECTRICAL, AND PLUMBING DRAWINGS FOR ADDITIONAL NOTES.
2. SEE SCHEDULES FOR WALL TYPES, DOOR/FRAME/WINDOW TYPES AND SIZES, AND FLOOR/WALL/CEILING FINISHES.
3. PROTECT EXISTING ITEMS TO REMAIN.

NEW WORK KEYNOTES

MARK	DESCRIPTION
1	PVC MEMBRANE ROOF SYSTEM OVER RECOVERY BOARD, R-25 POLYISOCYANURATE INSULATION, VAPOR RETARDER AND METAL DECKING AND STEEL ROOF JOISTS. SEE STRUCTURAL. SEE ROOF TYPES ON A-003.
2	ROOFTOP MECHANICAL UNITS, CURBS AND CRICKETS, SEE MECHANICAL. SEE DETAIL A/A-110.
3	PRE-FINISHED OVERHEAD SUPPORTED METAL CANOPY. INSTALL PER MANUFACTURERS RECOMMENDATION. SEE DETAILS ON A-501.
4	6" X 6" THROUGH WALL SCUPPER WITH 6" CONDUCTOR HEAD AND 4" X 4" DOWNSPOUT. PROVIDE 6" X 6" ADJACENT OVERFLOW SCUPPER. SEE DETAILS ON A-502.
5	INDOOR RANGE EQUIPMENT INCLUDING; DUST CONTAINMENT AND COMPLETE RANGE HVAC SYSTEM. DESIGNED/PROVIDED AND INSTALLED BY RANGE COMPONENT MANUFACTURER. SEE OWNER PREFERRED ALTERNATE 06 ON SHEET GI001.

GRAPHIC SCALE(S)

1/8" =1'-0" 0' 4' 8' 16'

WALKER the GROUP ARCHITECTURE incorporated
PO BOX 541, NEW BERN, NC 28563
252-636-8778

Christopher B. Walker REGISTERED SEAL 15616 07/28/25 ARCHITECT NORTH CAROLINA

THE WALKER GROUP ARCHITECTURE INCORPORATED REGISTERED ARCHITECTURAL CORPORATION CERT. NO. 51132 NORTH CAROLINA NEW BERN, NC

CRAVEN COMMUNITY COLLEGE- PUBLIC SAFETY TRAINING CENTER

525 Executive Pkwy
New Bern, NC 28562

Bid Documents

SCO # 24-27879-01A

Revisions

No.	Date

Project Number: 2407.SAFE
Date: 07/28/25
Drawn: TRA
Checked: CBW
Scale: AS NOTED

Drawing Title

INDOOR RANGE ROOF PLAN

Sheet Number: 96 Of 158

Drawing Number: A-109

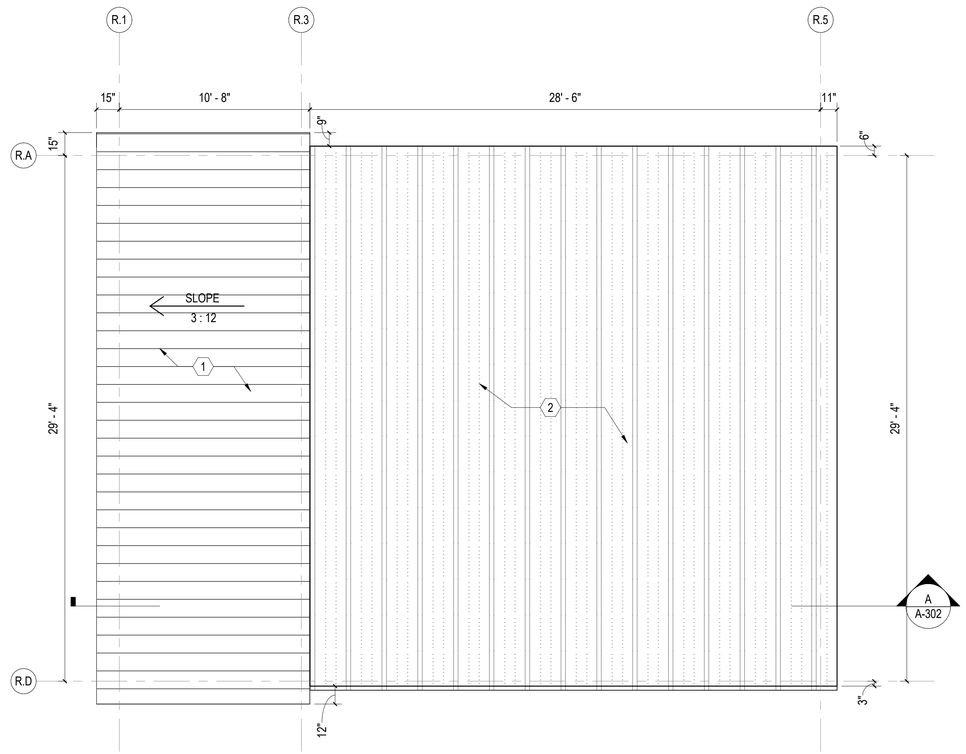

REHAB SHELTER ROOF PLAN

SCALE: 1/4" = 1'-0"

PLAN NORTH

GENERAL SHEET NOTES

1. SEE CIVIL, STRUCTURAL, MECHANICAL, ELECTRICAL, AND PLUMBING DRAWINGS FOR ADDITIONAL NOTES.
2. SEE SCHEDULES FOR WALL TYPES, DOOR/FRAME/WINDOW TYPES AND SIZES, AND FLOOR/WALL/CEILING FINISHES.
3. PROTECT EXISTING ITEMS TO REMAIN.

NEW WORK KEYNOTES

MARK	DESCRIPTION
1	STANDING SEAM METAL ROOF OVER VAPOR BARRIER, RECOVERY BOARD, R-25 POLYISOCYANURATE INSULATION, METAL DECKING AND STEEL ROOF JOISTS. SEE STRUCTURAL. SEE ROOF TYPES ON A-003.
2	30'x30' PRE-FINISHED METAL CANOPY. PROVIDED AND INSTALLED BY OWNER.

NOTE: WORK RELATED TO REHAB BUILDINGS IS CONSIDERED BID ALTERNATE 03, SEE SHEET GI001.

GRAPHIC SCALE(S)

1/4" =1'-0" 0' 2' 4' 8'

WALKER the GROUP ARCHITECTURE incorporated
PO BOX 541, NEW BERN, NC 28563
252-636-8778

Christopher B. Walker REGISTERED SEAL 15616 07/28/25 ARCHITECT NORTH CAROLINA

THE WALKER GROUP ARCHITECTURE INCORPORATED REGISTERED ARCHITECTURAL CORPORATION CERT. NO. 51132 NORTH CAROLINA NEW BERN, NC

CRAVEN COMMUNITY COLLEGE- PUBLIC SAFETY TRAINING CENTER

525 Executive Pkwy
New Bern, NC 28562

Bid Documents

SCO # 24-27879-01A

Revisions

No.	Date

Project Number: 2407.SAFE
Date: 07/28/25
Drawn: TRA
Checked: CBW
Scale: AS NOTED

Drawing Title

REHAB SHELTER ROOF PLAN

Sheet Number
97 Of 158

Drawing Number
A-110

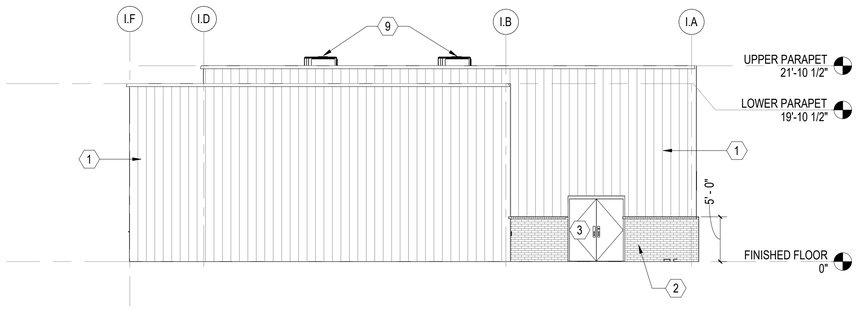

A INDOOR RANGE REAR ELEVATION

SCALE: 1/8" = 1'-0" (A-101)

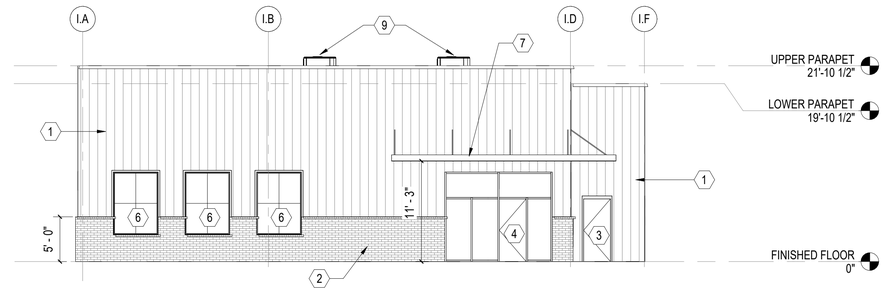

B INDOOR RANGE FRONT ELEVATION

SCALE: 1/8" = 1'-0" (A-101)

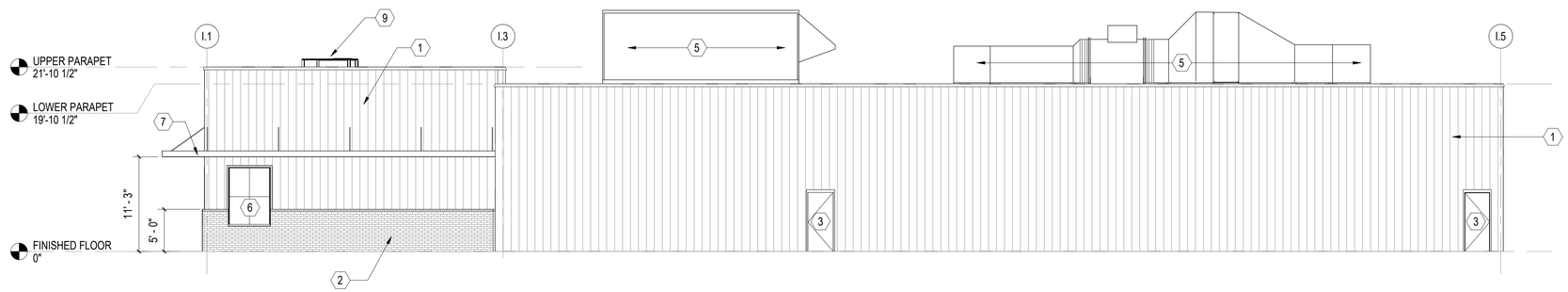

C INDOOR RANGE RIGHT ELEVATION

SCALE: 1/8" = 1'-0" (A-101)

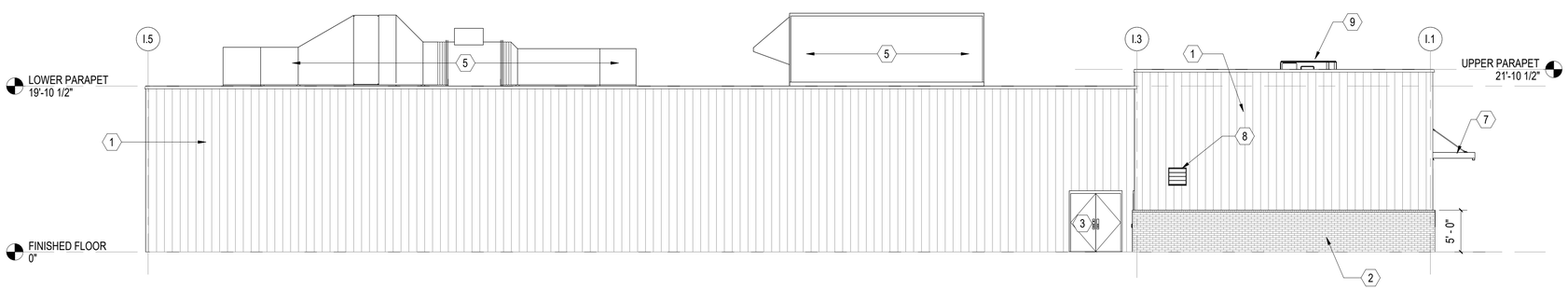

D INDOOR RANGE LEFT ELEVATION

SCALE: 1/8" = 1'-0" (A-101)

GENERAL SHEET NOTES

1. SEE CIVIL, STRUCTURAL, MECHANICAL, ELECTRICAL, AND PLUMBING DRAWINGS FOR ADDITIONAL NOTES.
2. SEE SCHEDULES FOR WALL TYPES, DOOR/FRAME/WINDOW TYPES AND SIZES, AND FLOOR/WALL/CEILING FINISHES.
3. PROTECT EXISTING ITEMS TO REMAIN.

NEW WORK KEYNOTES

MARK	DESCRIPTION
1	PRE-FINISHED METAL WALL PANEL.
2	SPLIT FACE BLOCK WAINSCOT, SEE WALL TYPES ON A-003.
3	HOLLOW METAL FRAME AND STEEL DOOR. SEE DOOR SCHEDULE.
4	ALUMINUM STOREFRONT SYSTEM AND DOOR. SEE SCHEDULE.
5	INDOOR RANGE EQUIPMENT INCLUDING; DUST CONTAINMENT AND COMPLETE RANGE HVAC SYSTEM. DESIGNED/PROVIDED AND INSTALLED BY RANGE COMPONENT MANUFACTURER. SEE OWNER PREFERRED ALTERNATE 06 ON SHEET GI001.
6	ALUMINUM WINDOW. SILL HEIGHT 3'-0. SEE WINDOW SCHEDULE.
7	PRE-FINISHED OVERHEAD SUPPORTED METAL CANOPY. INSTALL PER MANUFACTURERS RECOMMENDATION. SEE DETAILS ON A-501.
8	WALL LOUVER, SEE MECHANICAL.
9	ROOFTOP MECHANICAL UNITS, CURBS AND CRICKETS, SEE MECHANICAL. SEE DETAIL A/A-110.

GRAPHIC SCALE(S)

1/8" =1'-0" 0' 4' 8' 16'

WALKER the GROUP ARCHITECTURE incorporated
PO BOX 541, NEW BERN, NC 28563
252-636-8778

Christopher B. Walker REGISTERED SEAL 15616 07/28/25 ARCHITECT NORTH CAROLINA

THE WALKER GROUP ARCHITECTURE INCORPORATED REGISTERED ARCHITECTURAL CORPORATION CERT. NO. 51132 NORTH CAROLINA NEW BERN, NC

CRAVEN COMMUNITY COLLEGE-PUBLIC SAFETY TRAINING CENTER

525 Executive Pkwy
New Bern, NC 28562

Bid Documents

SCO # 24-27879-01A

Revisions

No.	Date

Project Number: 2407.SAFE
Date: 07/28/25
Drawn: TRA
Checked: CBW
Scale: AS NOTED

Drawing Title

INDOOR RANGE ELEVATIONS

Sheet Number
98 Of 158

Drawing Number
A-201

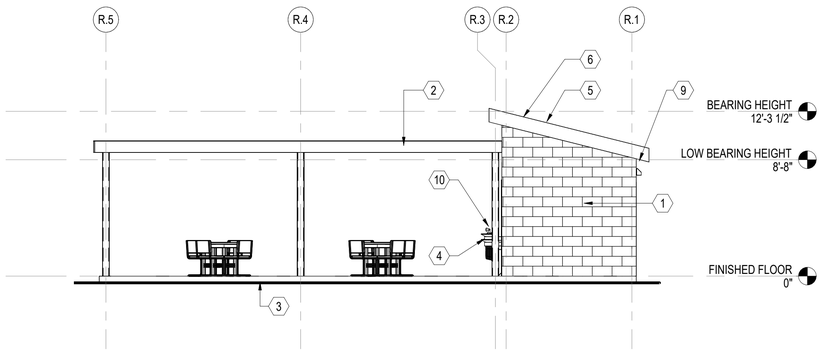

A REHAB SHELTER NORTH ELEVATION

SCALE: 3/16" = 1'-0" (A-102)

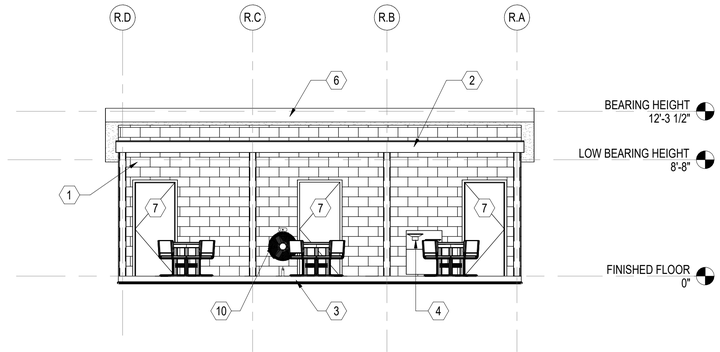

B REHAB SHELTER EAST ELEVATION

SCALE: 3/16" = 1'-0" (A-102)

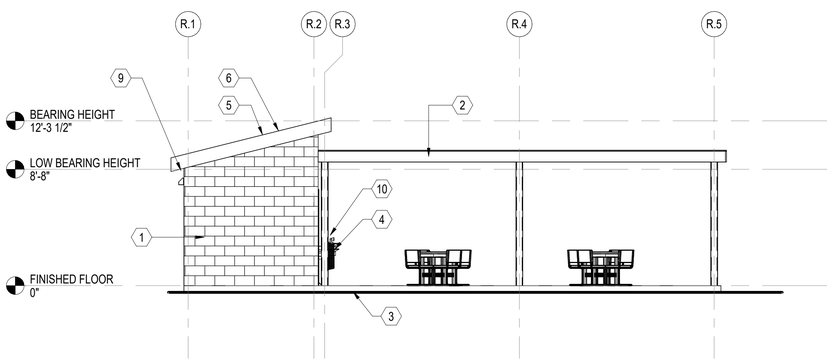

C REHAB SHELTER SOUTH ELEVATION

SCALE: 3/16" = 1'-0" (A-102)

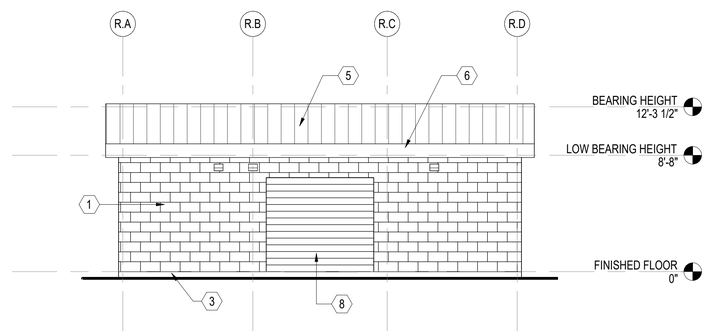

D REHAB SHELTER WEST ELEVATION

SCALE: 3/16" = 1'-0" (A-102)

GENERAL SHEET NOTES

1. SEE CIVIL, STRUCTURAL, MECHANICAL, ELECTRICAL, AND PLUMBING DRAWINGS FOR ADDITIONAL NOTES.
2. SEE SCHEDULES FOR WALL TYPES, DOOR/FRAME/WINDOW TYPES AND SIZES, AND FLOOR/WALL/CEILING FINISHES.
3. PROTECT EXISTING ITEMS TO REMAIN.

NEW WORK KEYNOTES

MARK	DESCRIPTION
1	8" SPLIT FACE CMU. SEE WALL TYPES ON FLOOR PLAN. SEE WALL ASSEMBLIES A-003.
2	30'x30' PRE-FINISHED METAL CANOPY. PROVIDED AND INSTALLED BY OWNER.
3	CONCRETE APRON WITH THICKENED SLAB EDGES. SEE STRUCTURAL.
4	HI-LOW WATER COOLER, SEE PLUMBING.
5	STANDING SEAM METAL ROOF OVER VAPOR BARRIER, RECOVERY BAORD, R-25 POLYISOCYANURATE INSULATION, METAL DECKING AND STEEL ROOF JOISTS. SEE STRUCTURAL. SEE ROOF TYPES ON A-003.
6	PVC FASCIA AND TRIM. PAINT.
7	HOLLOW METAL FRAME AND STEEL DOOR. SEE DOOR SCHEDULE.
8	COILING DOOR, SEE FLOOR PLAN AND DOOR SCHEDULE.
9	EXHAUST FAN WALL VENT CAP, SEE MECHANICAL.
10	WALL MOUNTED FAN, SEE MECHANICAL.

NOTE: WORK RELATED TO REHAB BUILDINGS IS CONSIDERED BID ALTERNATE 03, SEE SHEET GI001.

GRAPHIC SCALE(S)

3/16" =1'-0" 0' 4' 8' 12'

WALKER the GROUP ARCHITECTURE incorporated
PO BOX 541, NEW BERN, NC 28563
252-636-8778

Christopher B. Walker REGISTERED SEAL 15616 07/28/25 ARCHITECT NORTH CAROLINA

THE WALKER GROUP ARCHITECTURE INCORPORATED REGISTERED ARCHITECTURAL CORPORATION CERT. NO. 51132 NORTH CAROLINA NEW BERN, NC

CRAVEN COMMUNITY COLLEGE- PUBLIC SAFETY TRAINING CENTER

525 Executive Pkwy
New Bern, NC 28562

Bid Documents

SCO # 24-27879-01A

Revisions

No.	Date

Project Number: 2407.SAFE
Date: 07/28/25
Drawn: TRA
Checked: CBW
Scale: AS NOTED

Drawing Title

REHAB SHELTER ELEVATIONS

Sheet Number: 99 Of 158

Drawing Number: A-202

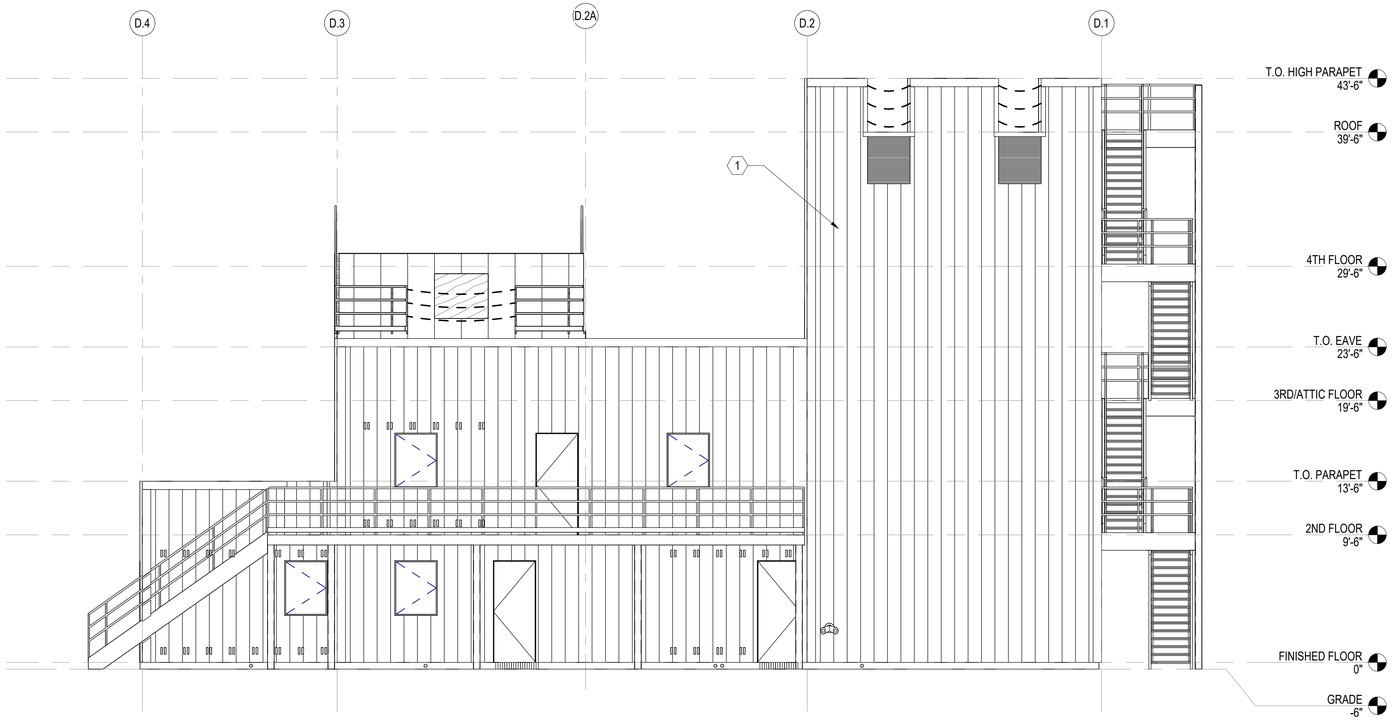

A DRILL/BURN TOWER NORTH ELEVATION

SCALE: 3/16" = 1'-0" (A-102)

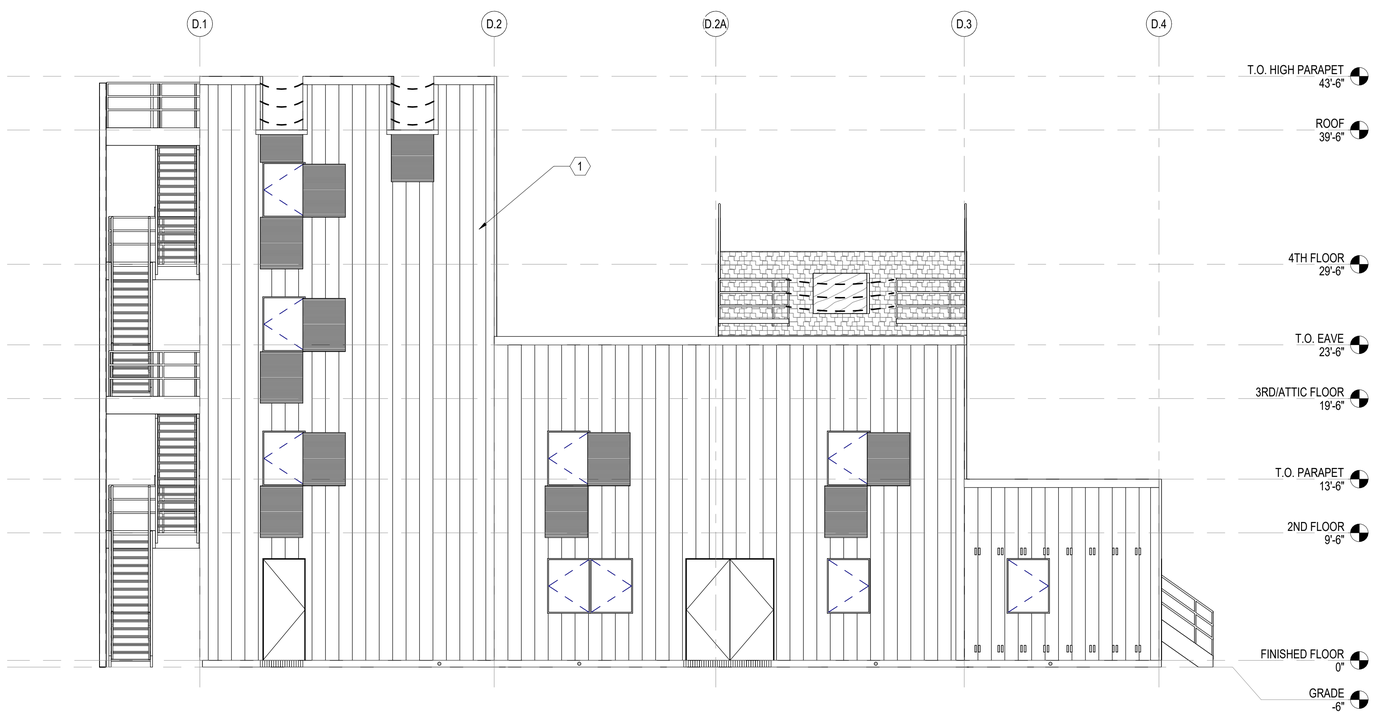

B DRILL/BURN TOWER SOUTH ELEVATION

SCALE: 3/16" = 1'-0" (A-102)

GENERAL SHEET NOTES

1. SEE CIVIL, STRUCTURAL, MECHANICAL, ELECTRICAL, AND PLUMBING DRAWINGS FOR ADDITIONAL NOTES.
2. SEE SCHEDULES FOR WALL TYPES, DOOR/FRAME/WINDOW TYPES AND SIZES, AND FLOOR/WALL/CEILING FINISHES.
3. PROTECT EXISTING ITEMS TO REMAIN.

NEW WORK KEYNOTES

MARK	DESCRIPTION
1	DRILL/BURN TRAINING TOWER PROVIDED AND INSTALLED BY MANUFACTURER. GENERAL CONTRACTOR TO PROVIDE FOUNDATION, CONCRETE FLOORS WITHIN TOWER (PER MANUFACTURER) AND ELECTRICAL.

NOTE: WORK RELATED TO BURN/DRILL TOWER IS CONSIDERED BID ALTERNATE 01, SEE SHEET GI001.

GRAPHIC SCALE(S)

3/16" =1'-0" 0' 4' 8' 12'

WALKER the GROUP ARCHITECTURE incorporated
PO BOX 541, NEW BERN, NC 28563
252-636-8778

Christopher B. Walker REGISTERED SEAL 15616 07/28/25 ARCHITECT NORTH CAROLINA

THE WALKER GROUP ARCHITECTURE INCORPORATED REGISTERED ARCHITECTURAL CORPORATION CERT. NO. 51132 NORTH CAROLINA NEW BERN, NC

CRAVEN COMMUNITY COLLEGE-PUBLIC SAFETY TRAINING CENTER

525 Executive Pkwy
New Bern, NC 28562

Bid Documents

SCO # 24-27879-01A

Revisions

No.	Date

Project Number: 2407.SAFE
Date: 07/28/25
Drawn: TRA
Checked: CBW
Scale: AS NOTED

Drawing Title

DRILL/BURN TOWER ELEVATIONS

Sheet Number: 100 Of 158

Drawing Number: A-203

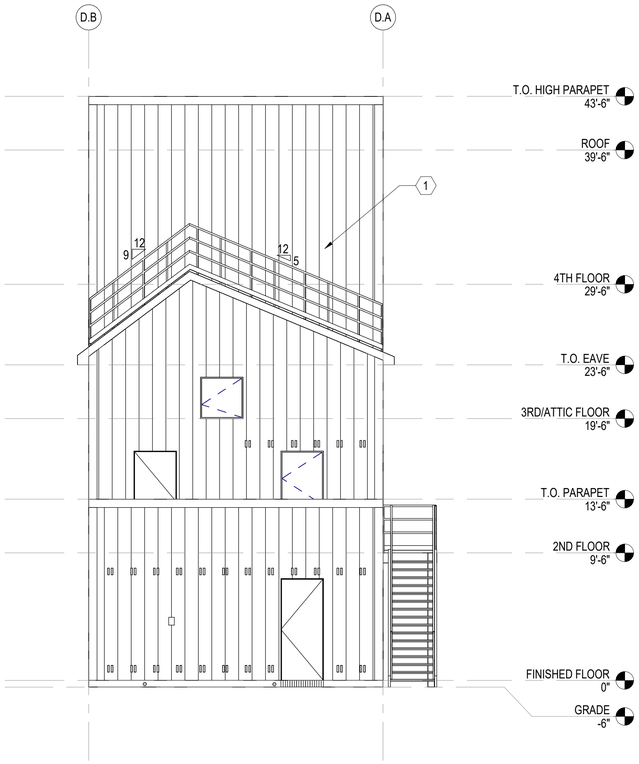

A DRILL/BURN TOWER EAST ELEVATION

SCALE: 3/16" = 1'-0" (A-102)

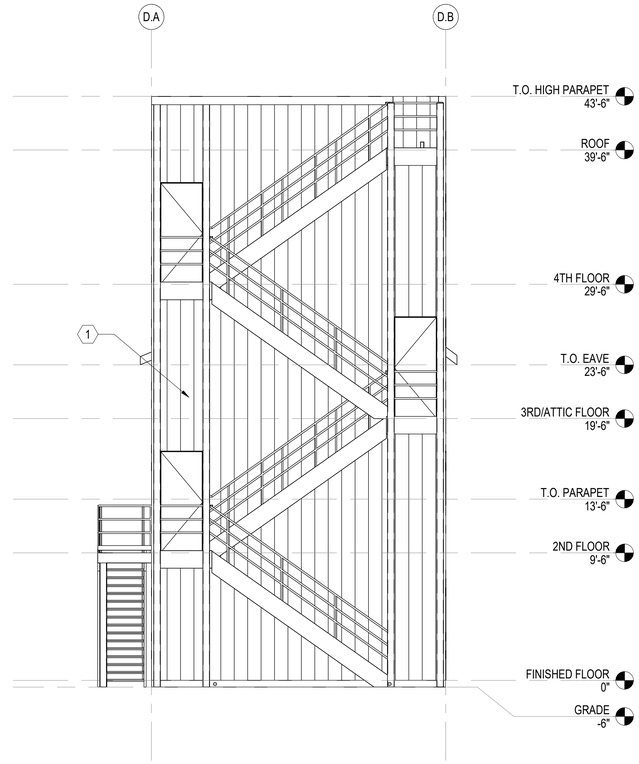

B DRILL/BURN TOWER WEST ELEVATION

SCALE: 3/16" = 1'-0" (A-102)

GENERAL SHEET NOTES

1. SEE CIVIL, STRUCTURAL, MECHANICAL, ELECTRICAL, AND PLUMBING DRAWINGS FOR ADDITIONAL NOTES.
2. SEE SCHEDULES FOR WALL TYPES, DOOR/FRAME/WINDOW TYPES AND SIZES, AND FLOOR/WALL/CEILING FINISHES.
3. PROTECT EXISTING ITEMS TO REMAIN.

NEW WORK KEYNOTES

MARK	DESCRIPTION
1	DRILL/BURN TRAINING TOWER PROVIDED AND INSTALLED BY MANUFACTURER. GENERAL CONTRACTOR TO PROVIDE FOUNDATION, CONCRETE FLOORS WITHIN TOWER (PER MANUFACTURER) AND ELECTRICAL.

NOTE: WORK RELATED TO BURN/DRILL TOWER IS CONSIDERED BID ALTERNATE 01, SEE SHEET GI001.

GRAPHIC SCALE(S)

3/16" =1'-0" 0' 4' 8' 12'

WALKER the GROUP ARCHITECTURE incorporated
PO BOX 541, NEW BERN, NC 28563
252-636-8778

Christopher B. Walker REGISTERED SEAL 15616 07/28/25 ARCHITECT NORTH CAROLINA

THE WALKER GROUP ARCHITECTURE INCORPORATED REGISTERED ARCHITECTURAL CORPORATION CERT. NO. 51132 NORTH CAROLINA NEW BERN, NC

CRAVEN COMMUNITY COLLEGE- PUBLIC SAFETY TRAINING CENTER

525 Executive Pkwy
New Bern, NC 28562

Bid Documents

SCO # 24-27879-01A

Revisions

No.	Date

Project Number 2407.SAFE
Date 07/28/25
Drawn TRA
Checked CBW
Scale AS NOTED

Drawing Title

DRILL/BURN TOWER ELEVATIONS

Sheet Number 101 Of 158

Drawing Number

A-204

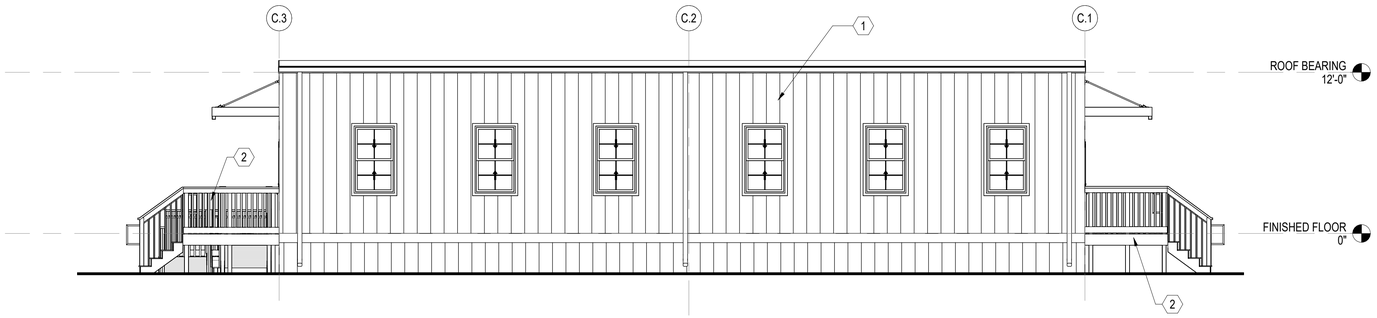

A MODULAR CLASSROOM NORTH ELEVATION

SCALE: 3/16" = 1'-0" (A-101)

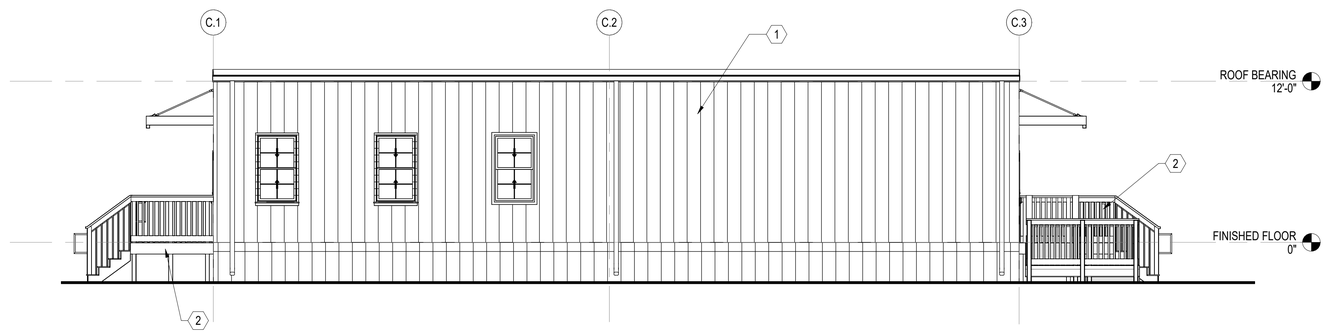

B MODULAR CLASSROOM SOUTH ELEVATION

SCALE: 3/16" = 1'-0" (A-101)

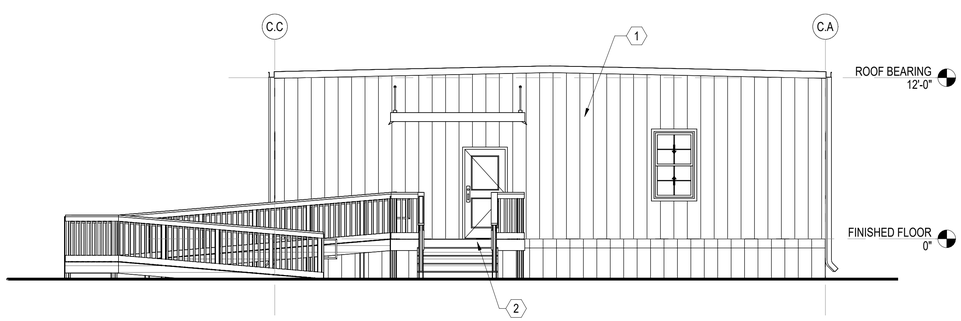

C MODULAR CLASSROOM EAST ELEVATION

SCALE: 3/16" = 1'-0" (A-101)

D MODULAR CLASSROOM WEST ELEVATION

SCALE: 3/16" = 1'-0" (A-101)

GENERAL SHEET NOTES

1. SEE CIVIL, STRUCTURAL, MECHANICAL, ELECTRICAL, AND PLUMBING DRAWINGS FOR ADDITIONAL NOTES.
2. SEE SCHEDULES FOR WALL TYPES, DOOR/FRAME/WINDOW TYPES AND SIZES, AND FLOOR/WALL/CEILING FINISHES.
3. PROTECT EXISTING ITEMS TO REMAIN.

NEW WORK KEYNOTES

MARK	DESCRIPTION
1	MODULAR CLASSROOM BUILDING PROVIDED AN INSTALLED BY MANUFACTURER.
2	METAL PLATFORM, STAIR AND ACCESSIBLE RAMP BY MODULAR BUILDING MANUFACTURER.

NOTE: WORK RELATED TO LANDING, STAIRS AND RAMP IS CONSIDERED BID ALTERNATE 06, SEE SHEET GI001.

NOTE: MODULAR BUILDING SHALL BE REVIEWED AND APPROVED BY DEPARTMENT OF INSURANCE OFFICE OF STATE FIRE MARSHALL FOR ALL LIFE SAFETY, MECHANICAL, ELECTRICAL, AND PLUMBING SYSTEMS PRIOR TO BEING DELIVERED TO PROJECT SITE .

GRAPHIC SCALE(S)

3/16" =1'-0" 0' 4' 8' 12'

WALKER the GROUP ARCHITECTURE incorporated
PO BOX 541, NEW BERN, NC 28563
252-636-8778

Christopher B. Walker REGISTERED SEAL 15616 07/28/25 ARCHITECT NORTH CAROLINA

THE WALKER GROUP ARCHITECTURE INCORPORATED REGISTERED ARCHITECTURAL CORPORATION CERT. NO. 51132 NORTH CAROLINA NEW BERN, NC

CRAVEN COMMUNITY COLLEGE-PUBLIC SAFETY TRAINING CENTER

525 Executive Pkwy
New Bern, NC 28562

Bid Documents

SCO # 24-27879-01A

Revisions

No.	Date

Project Number: 2407.SAFE
Date: 07/28/25
Drawn: TRA
Checked: CBW
Scale: AS NOTED

Drawing Title

MODULAR CLASSROOM ELEVATIONS

Sheet Number
102 Of 158

Drawing Number

A-205

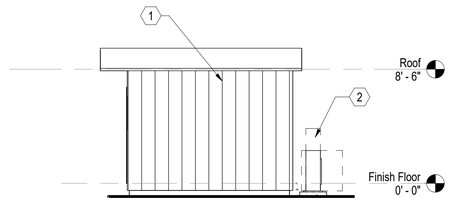

A GATEHOUSE NORTH ELEVATION

SCALE: 3/16" = 1'-0" (A-106)

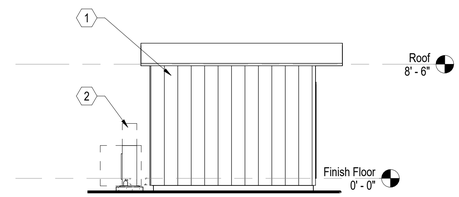

B GATEHOUSE SOUTH ELEVATION

SCALE: 3/16" = 1'-0" (A-106)

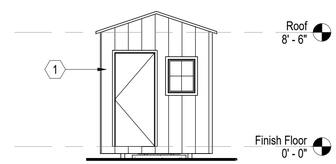

C GATEHOUSE EAST ELEVATION

SCALE: 3/16" = 1'-0" (A-106)

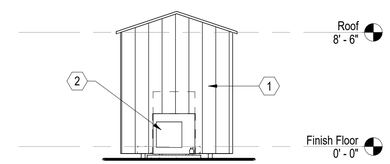

D GATEHOUSE WEST ELEVATION

SCALE: 3/16" = 1'-0" (A-106)

GENERAL SHEET NOTES

1. SEE CIVIL, STRUCTURAL, MECHANICAL, ELECTRICAL, AND PLUMBING DRAWINGS FOR ADDITIONAL NOTES.
2. SEE SCHEDULES FOR WALL TYPES, DOOR/FRAME/WINDOW TYPES AND SIZES, AND FLOOR/WALL/CEILING FINISHES.
3. PROTECT EXISTING ITEMS TO REMAIN.

NEW WORK KEYNOTES

MARK	DESCRIPTION
1	PRE-BUILT GATEHOUSE PROVIDED AND INSTALLED BY OWNER. CONCRETE PAD AND FOUNDATION BY GENERAL CONTRACTOR, SEE STRUCTURAL. MECHANICAL AND ELECTRICAL BY GENERAL CONTRACTOR.
2	DUCTLESS SPLIT SYSTEM, SEE MECHANICAL.

NOTE: WORK RELATED TO GATEHOUSE BUILDING IS CONSIDERED BID ALTERNATE 05, SEE SHEET GI001.

GRAPHIC SCALE(S)

3/16" =1'-0" 0' 4' 8' 12'

WALKER the GROUP ARCHITECTURE incorporated
PO BOX 541, NEW BERN, NC 28563
252-636-8778

Christopher B. Walker REGISTERED SEAL 15616 07/28/25 ARCHITECT NORTH CAROLINA

THE WALKER GROUP ARCHITECTURE INCORPORATED REGISTERED ARCHITECTURAL CORPORATION CERT. NO. 51132 NORTH CAROLINA NEW BERN, NC

CRAVEN COMMUNITY COLLEGE-PUBLIC SAFETY TRAINING CENTER

525 Executive Pkwy
New Bern, NC 28562

Bid Documents

SCO # 24-27879-01A

Revisions

No.	Date

Project Number: 2407.SAFE
Date: 07/28/25
Drawn: TRA
Checked: CBW
Scale: AS NOTED

Drawing Title

GATEHOUSE ELEVATIONS

Sheet Number
103 Of 158

Drawing Number
A-206

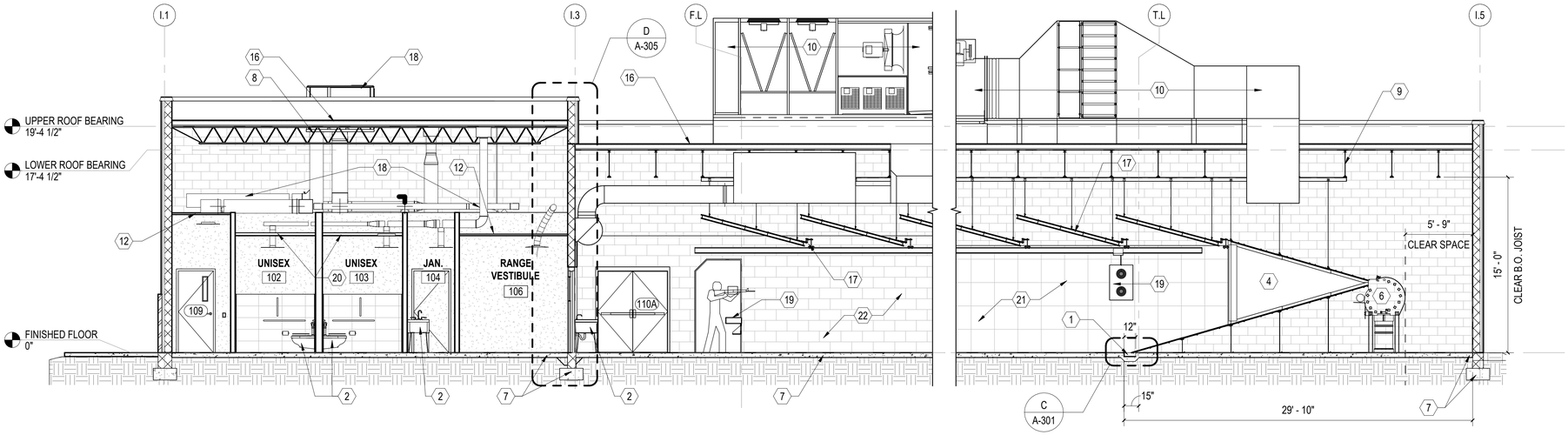

A RANGE BUILDING SECTION

SCALE: 3/16" = 1'-0" (A-101)

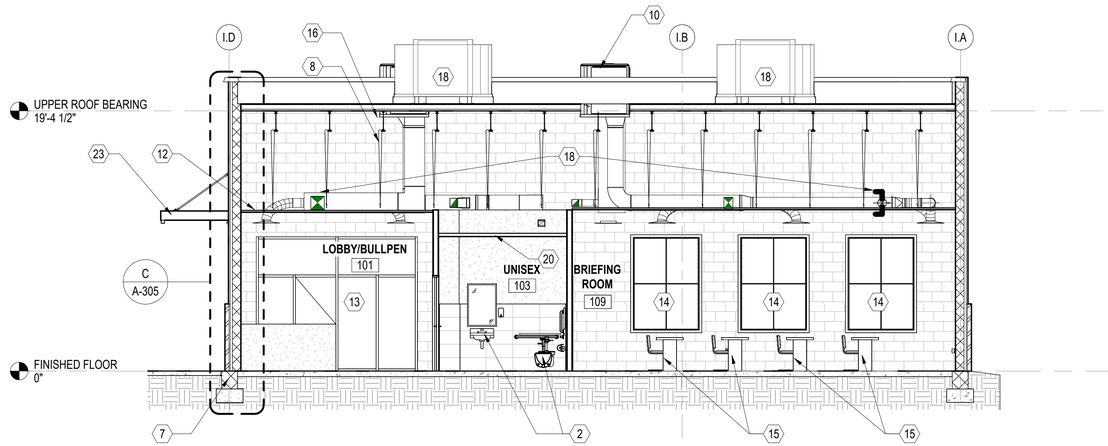

B RANGE CLASSROOM SECTION

SCALE: 3/16" = 1'-0" (A-101)

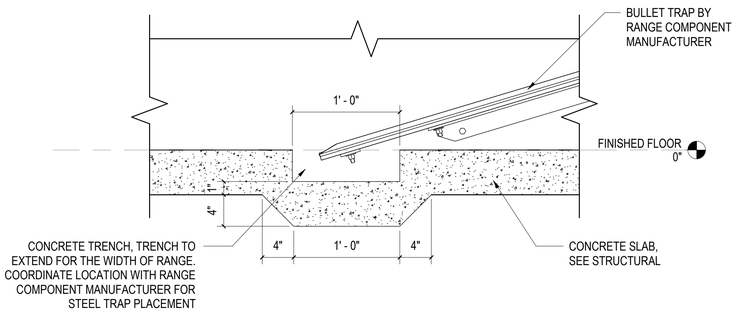

C INDOOR RANGE - TRENCH DETAIL

SCALE: 1 1/2" = 1'-0" (A-301)

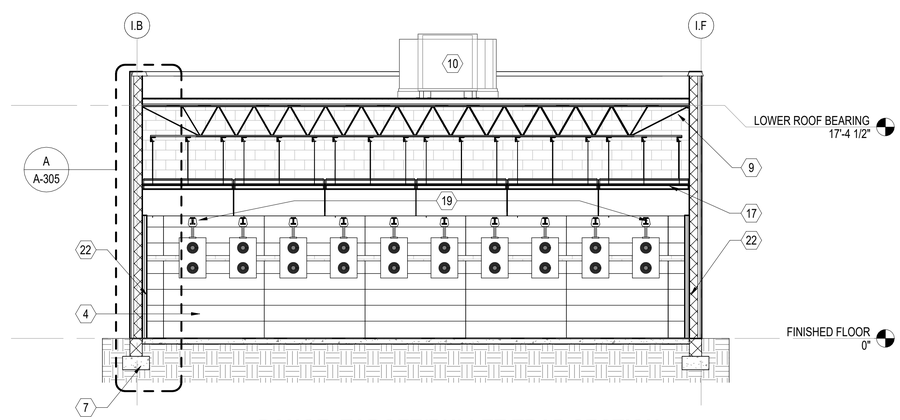

D RANGE TARGET/BULLET TRAP SECTION

SCALE: 3/16" = 1'-0" (A-101)

GENERAL SHEET NOTES

1. SEE CIVIL, STRUCTURAL, MECHANICAL, ELECTRICAL, AND PLUMBING DRAWINGS FOR ADDITIONAL NOTES.
2. SEE SCHEDULES FOR WALL TYPES, DOOR/FRAME/WINDOW TYPES AND SIZES, AND FLOOR/WALL/CEILING FINISHES.
3. PROTECT EXISTING ITEMS TO REMAIN.

NEW WORK KEYNOTES

MARK	DESCRIPTION
1	4"D X 12"W CONCRETE BULLET TRENCH. TRENCH EXTENDS FOR THE WIDTH OF THE RANGE. COORDINATE LOCATION WITH RANGE COMPONENT MANUFACTURER FOR STEEL TRAP PLACEMENT.
2	PLUMBING FIXTURES. SEE PLUMBING.
4	BULLET TRAP BY RANGE COMPONENT MANUFACTURER.
6	BULLET TRAP COLLECTION AND EXHAUST SYSTEM BY RANGE COMPONENT MANUFACTURER.
7	CONCRETE SLAB AND FOOTING, SEE STRUCTURAL.
8	K18 JOISTS @ 4' O.C., SEE STRUCTURAL
9	K28 JOISTS @ 4' O.C., SEE STRUCTURAL
10	DUST CONTAINMENT AND COMPLETE RANGE HVAC SYSTEM BY RANGE COMPONET MANUFACTURER.
12	ACOUSTICAL CEILING GRID, TILES, AND HANGERS. SEE REFLECTED CEILING PLAN.
13	ALUMINUM STOREFRONT SYSTEM AND DOOR. SEE STOREFRONT SCHEDULE.
14	ALUMINUM WINDOW. SILL HEIGHT 3'-0. SEE WINDOW SCHEDULE.
15	FURNITURE PROVIDED BY OWNER, TYPICAL.
16	PVC MEMBRANE ROOF SYSTEM OVER VAPOR BARRIER, RECOVERY BOARD, R-25 POLYISOCYANURATE INSULATION, METAL DECKING AND STEEL ROOF JOISTS. SEE STRUCTURAL.
17	BALLISTIC CEILING BAFFLES BY RANGE COMPONENT MANUFACTURER.
18	PROVIDE ROOFTOP UNITS, CURBS AND CRICKETS, SEE MECHANICAL. SEE DETAIL A/A-110.
19	RANGE STALLS, TARGET RETRIEVAL SYSTEM, CONTROL SYSTEM BY RANGE COMPONENT MANUFACTURER.
20	SUSPENDED GYPSUM BOARD CEILING.
21	COMBAT WALL BAFFLES, DESIGNED/PROVIDED AND INSTALLED BY RANGE COMPONENT MANUFACTURER. SEE OWNER PREFERRED ALTERNATE 06 ON SHEET GI001.
22	RANGE SIDE & BACK WALLS TREATED WITH (PEPP) ACOUSTICAL PANELING TO 10'-0". SEE WALL TYPE NOTE ON SHEET A-101 FOR MORE INFORMATION.
23	PRE-FINISHED OVERHEAD SUPPORTED METAL CANOPY. INSTALL PER MANUFACTURERS RECOMMENDATION. SEE DETAILS ON A-501.

GRAPHIC SCALE(S)

3/16" =1'-0" 0' 4' 8' 12'

1 1/2" =1'-0" 0' 4" 8" 1'-4"

WALKER the GROUP ARCHITECTURE incorporated
PO BOX 541, NEW BERN, NC 28563
252-636-8778

Christopher B. Walker REGISTERED SEAL 15616 07/28/25 ARCHITECT NORTH CAROLINA

THE WALKER GROUP ARCHITECTURE INCORPORATED REGISTERED ARCHITECTURAL CORPORATION CERT. NO. 51132 NORTH CAROLINA NEW BERN, NC

CRAVEN COMMUNITY COLLEGE-PUBLIC SAFETY TRAINING CENTER

525 Executive Pkwy
New Bern, NC 28562

Bid Documents

SCO # 24-27879-01A

Revisions

No.	Date

Project Number: 2407.SAFE
Date: 07/28/25
Drawn: TRA
Checked: CBW
Scale: AS NOTED

Drawing Title

INDOOR RANGE BUILDING SECTIONS

Sheet Number
104 Of 158

Drawing Number
A-301

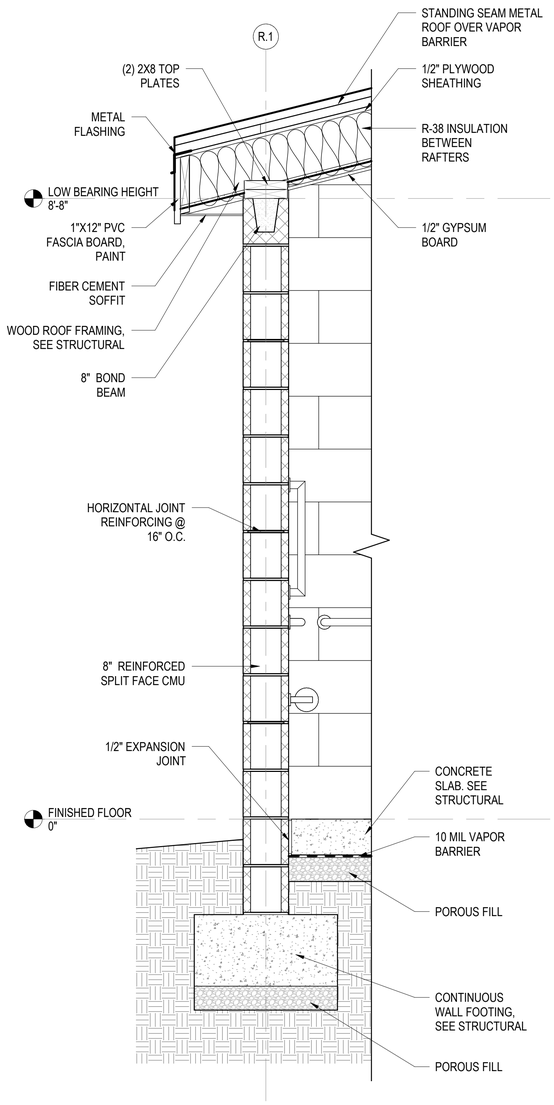

B REHAB SHELTER WALL SECTION

SCALE: 1" = 1'-0" (A-302)

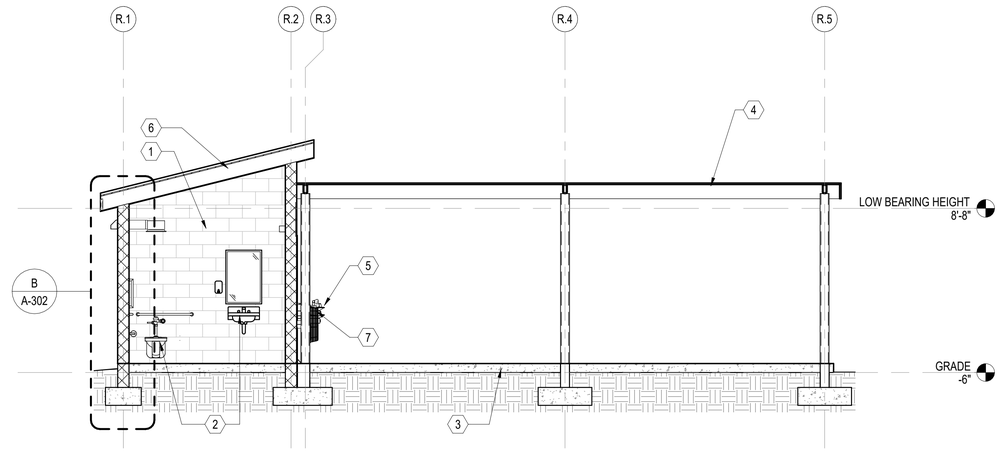

A REHAB SHELTER BUILDING SECTION

SCALE: 1/4" = 1'-0" (A-102)

GENERAL SHEET NOTES

1. SEE CIVIL, STRUCTURAL, MECHANICAL, ELECTRICAL, AND PLUMBING DRAWINGS FOR ADDITIONAL NOTES.
2. SEE SCHEDULES FOR WALL TYPES, DOOR/FRAME/WINDOW TYPES AND SIZES, AND FLOOR/WALL/CEILING FINISHES.
3. PROTECT EXISTING ITEMS TO REMAIN.

NEW WORK KEYNOTES

MARK	DESCRIPTION
1	8" SPLIT FACE CMU. SEE WALL TYPES ON FLOOR PLAN. SEE WALL ASSEMBLIES A-003.
2	PLUMBING FIXTURES, SEE PLUMBING.
3	CONCRETE PAD AND FOUNDATION BY GENERAL CONTRACTOR. SEE STRUCTURAL.
4	30'x30' PRE-FINISHED METAL CANOPY. PROVIDED AND INSTALLED BY OWNER.
5	HI-LOW WATER COOLER, SEE PLUMBING.
6	STANDING SEAM METAL ROOF OVER VAPOR BARRIER, RECOVERY BAORD, R-25 POLYISOCYANURATE INSULATION, METAL DECKING AND STEEL ROOF JOISTS. SEE STRUCTURAL. SEE ROOF TYPES ON A-003.
7	WALL MOUNTED FAN, SEE MECHANICAL.

NOTE: WORK RELATED TO REHAB SHELTER IS CONSIDERED BID ALTERNATE 03, SEE SHEET GI001.

GRAPHIC SCALE(S)

1" =1'-0" 0' 6" 1' 2'

1/4" =1'-0" 0' 2' 4' 8'

WALKER the GROUP ARCHITECTURE incorporated
PO BOX 541, NEW BERN, NC 28563
252-636-8778

Christopher B. Walker REGISTERED SEAL 15616 07/28/25 ARCHITECT NORTH CAROLINA

THE WALKER GROUP ARCHITECTURE INCORPORATED REGISTERED ARCHITECTURAL CORPORATION CERT. NO. 51132 NORTH CAROLINA NEW BERN, NC

CRAVEN COMMUNITY COLLEGE-PUBLIC SAFETY TRAINING CENTER

525 Executive Pkwy
New Bern, NC 28562

Bid Documents

SCO # 24-27879-01A

Revisions

No.	Date

Project Number: 2407.SAFE
Date: 07/28/25
Drawn: TRA
Checked: CBW
Scale: AS NOTED

Drawing Title

REHAB SHELTER BUILDING SECTION

Sheet Number
105 Of 158

Drawing Number
A-302

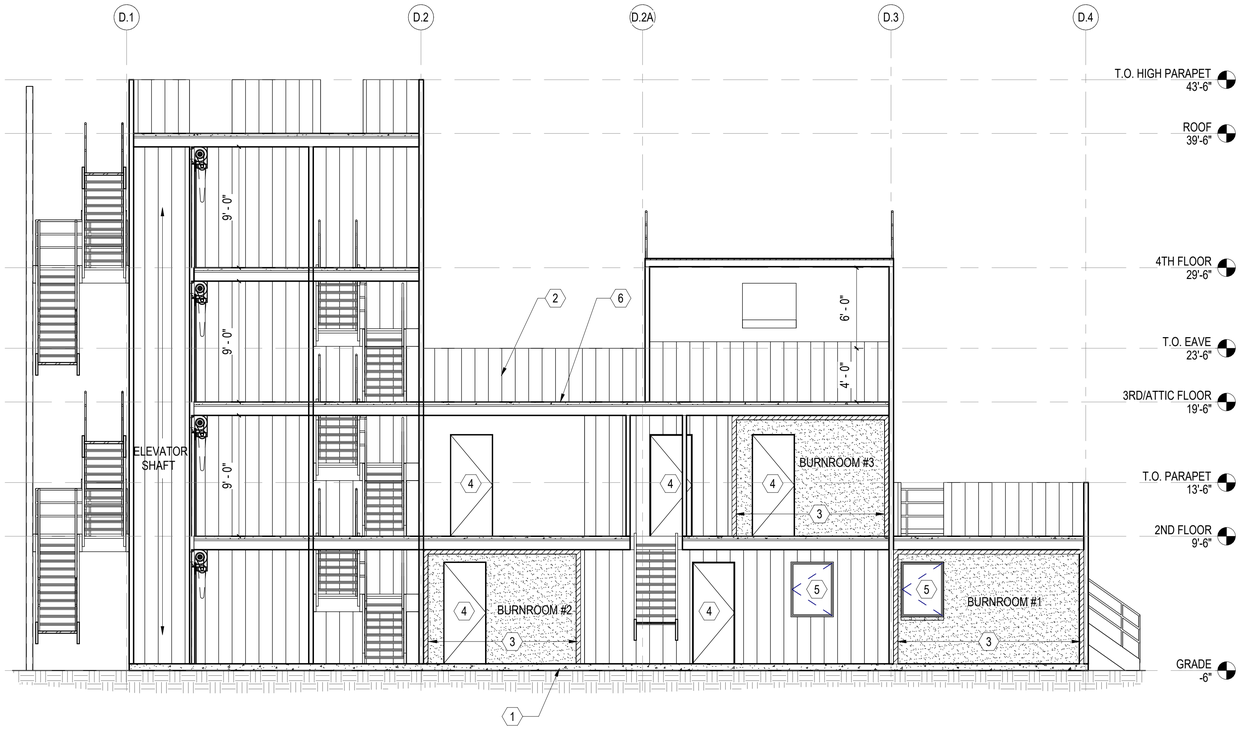

A DRILL/BURN TOWER BUILDING SECTION

SCALE: 3/16" = 1'-0" (A-103)

GENERAL SHEET NOTES

1. SEE CIVIL, STRUCTURAL, MECHANICAL, ELECTRICAL, AND PLUMBING DRAWINGS FOR ADDITIONAL NOTES.
2. SEE SCHEDULES FOR WALL TYPES, DOOR/FRAME/WINDOW TYPES AND SIZES, AND FLOOR/WALL/CEILING FINISHES.
3. PROTECT EXISTING ITEMS TO REMAIN.

NEW WORK KEYNOTES

MARK	DESCRIPTION
1	CONCRETE FOUNDATION AND SLAB. SEE STRUCTURAL.
2	DRILL/BURN TRAINING TOWER PROVIDED AND INSTALLED BY MANUFACTURER. GENERAL CONTRACTOR TO PROVIDE FOUNDATION, CONCRETE FLOORS WITHIN TOWER (PER MANUFACTURER) AND ELECTRICAL.
3	INTERLOCK BURN LINER ON ALL WALLS, DOORS, WINDOWS AND CEILINGS BY DRILL TOWER MANUFACTURER.
4	PLATE STEEL DOOR & HARDWARE BY DRILL TOWER MANUFACTURER.
5	LEVER ACTION PAINTED STEEL CLOSURE BY DRILL TOWER MANUFACTURER.
6	GENERAL CONTRACTOR TO PROVIDE 4" CONCRETE OVER DRILL TOWER MANUFACTURER INSTALLED METAL DECK AT EACH FLOOR LOCATION WITHIN TOWER AND AT THE ROOF LEVEL. TYPICAL.

NOTE: WORK RELATED TO BURN/DRILL TOWER IS CONSIDERED BID ALTERNATE 01, SEE SHEET GI001.

GRAPHIC SCALE(S)

3/16" =1'-0" 0' 4' 8' 12'

WALKER the GROUP ARCHITECTURE incorporated
PO BOX 541, NEW BERN, NC 28563
252-636-8778

Christopher B. Walker REGISTERED SEAL 15616 07/28/25 ARCHITECT NORTH CAROLINA

THE WALKER GROUP ARCHITECTURE INCORPORATED REGISTERED ARCHITECTURAL CORPORATION CERT. NO. 51132 NORTH CAROLINA NEW BERN, NC

CRAVEN COMMUNITY COLLEGE-PUBLIC SAFETY TRAINING CENTER

525 Executive Pkwy
New Bern, NC 28562

Bid Documents

SCO # 24-27879-01A

Revisions

No.	Date

Project Number: 2407.SAFE
Date: 07/28/25
Drawn: TRA
Checked: CBW
Scale: AS NOTED

Drawing Title

DRILL/BURN TOWER BUILDING SECTION

Sheet Number
106 Of 158

Drawing Number
A-303

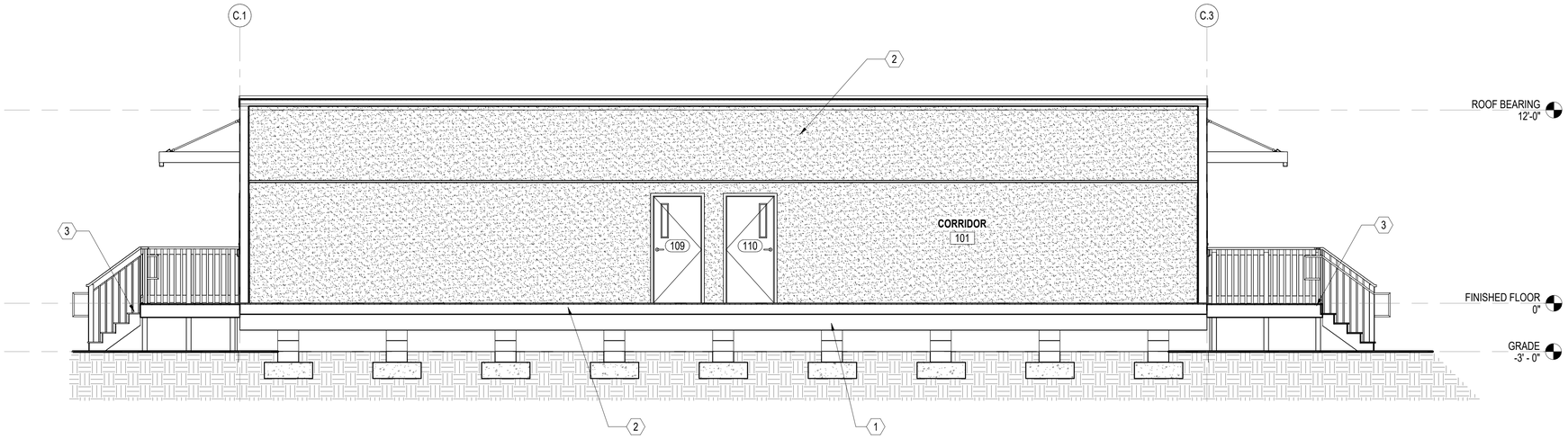

A MODULAR CLASSROOM BUILDING SECTION

SCALE: 1/4" = 1'-0" (A-105)

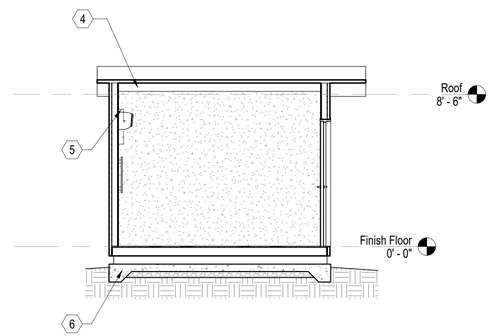

B GATEHOUSE EAST/WEST SECTION

SCALE: 1/4" = 1'-0" (A-106)

GENERAL SHEET NOTES

1. SEE CIVIL, STRUCTURAL, MECHANICAL, ELECTRICAL, AND PLUMBING DRAWINGS FOR ADDITIONAL NOTES.
2. SEE SCHEDULES FOR WALL TYPES, DOOR/FRAME/WINDOW TYPES AND SIZES, AND FLOOR/WALL/CEILING FINISHES.
3. PROTECT EXISTING ITEMS TO REMAIN.

NEW WORK KEYNOTES

MARK	DESCRIPTION
1	MODULAR CLASSROOM BUILDING PROVIDED AN INSTALLED BY MANUFACTURER,
2	PRE FINISHED OVERHEAD SUPPORTED METAL CANOPIES BY MODULAR MANUFACTURER.
3	STAIR AND ACCESSIBLE RAMP BY MODULAR BUILDING MANUFACTURER.
4	PRE-BUILT GATEHOUSE PROVIDED AND INSTALLED BY OWNER. CONCRETE PAD AND FOUNDATION BY GENERAL CONTRACTOR, SEE STRUCTURAL. MECHANICAL AND ELECTRICAL BY GENERAL CONTRACTOR.
5	DUCTLESS SPLIT SYSTEM, SEE MECHANICAL.
6	CONCRETE SLAB WITH THICKENED SLAB EDGES, SEE STRUCTURAL.

NOTE: WORK RELATED TO MODULAR CLASSROOM IS CONSIDERED BID ALTERNATE 02, SEE SHEET GI001.

NOTE: WORK RELATED TO GATEHOUSE BUILDING IS CONSIDERED BID ALTERNATE 05, SEE SHEET GI001.

GRAPHIC SCALE(S)

1/4" =1'-0" 0' 2' 4' 8'

WALKER the GROUP ARCHITECTURE incorporated
PO BOX 541, NEW BERN, NC 28563
252-636-8778

Christopher B. Walker REGISTERED SEAL 15616 07/28/25 ARCHITECT NORTH CAROLINA

THE WALKER GROUP ARCHITECTURE INCORPORATED REGISTERED ARCHITECTURAL CORPORATION CERT. NO. 51132 NORTH CAROLINA NEW BERN, NC

CRAVEN COMMUNITY COLLEGE-PUBLIC SAFETY TRAINING CENTER

525 Executive Pkwy
New Bern, NC 28562

Bid Documents

SCO # 24-27879-01A

Revisions

No.	Date

Project Number: 2407.SAFE
Date: 07/28/25
Drawn: TRA
Checked: CBW
Scale: AS NOTED
Drawing Title:

BUILDINGS SECTIONS

Sheet Number: 107 Of 158
Drawing Number: A-304

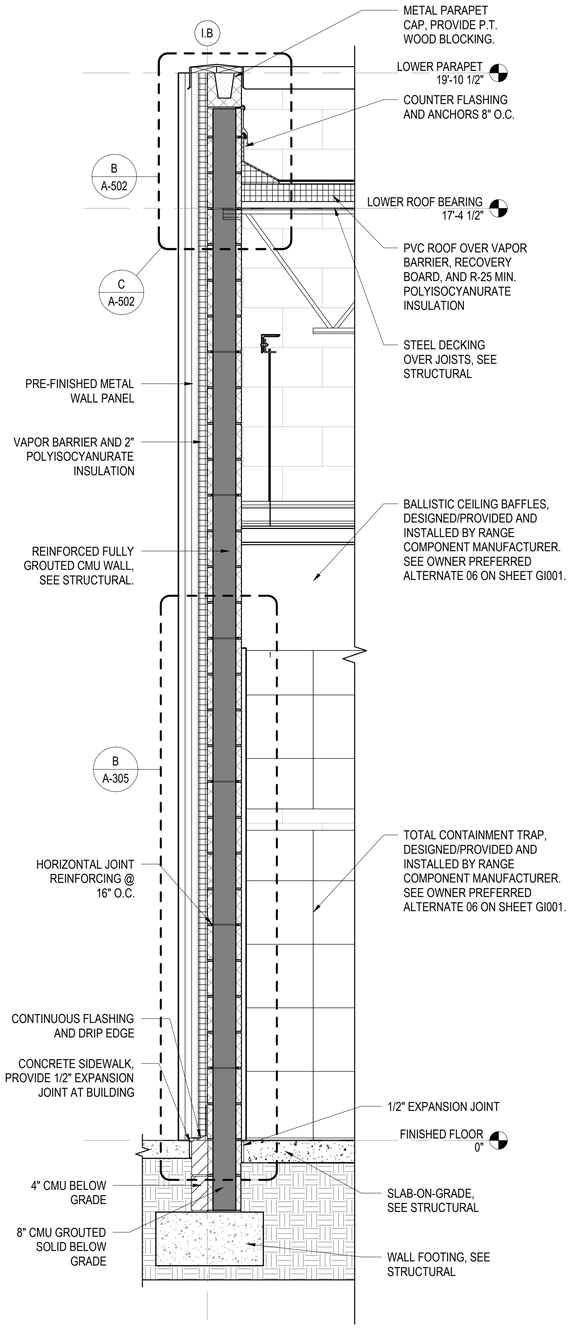

A WALL SECTION AT RANGE

SCALE: 3/4" = 1'-0" (A-301)

NOTE: COMBAT WALL BAFFLE SYSTEM, DESIGNED/ PROVIDED AND INSTALLED BY RANGE COMPONENT MANUFACTURER. SEE OWNER PREFERRED ALTERNATE 06 ON SHEET GI001.

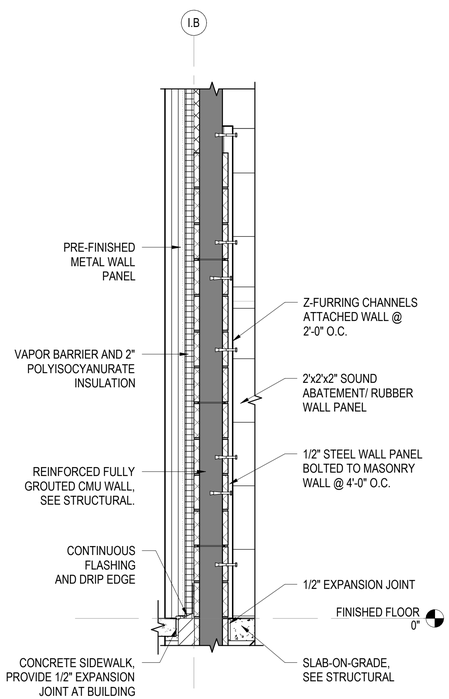

B WALL SECTION AT RANGE - WALL BAFFLES

SCALE: 3/4" = 1'-0" (A-305)

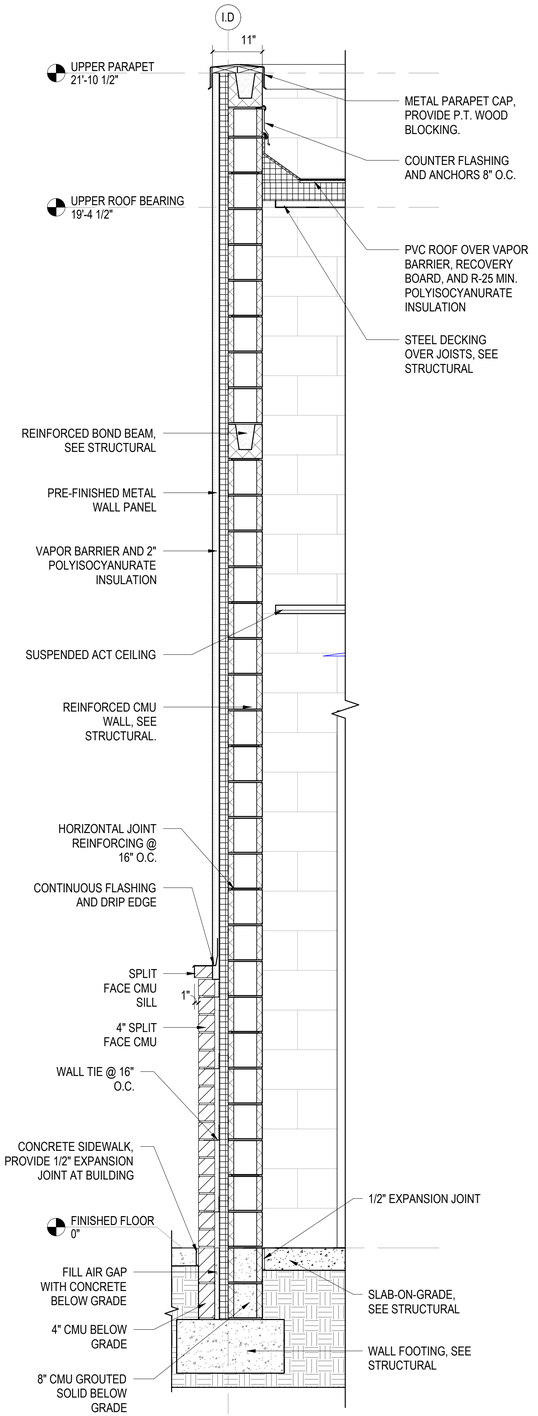

C WALL SECTION AT RANGE ENTRY

SCALE: 3/4" = 1'-0" (A-301)

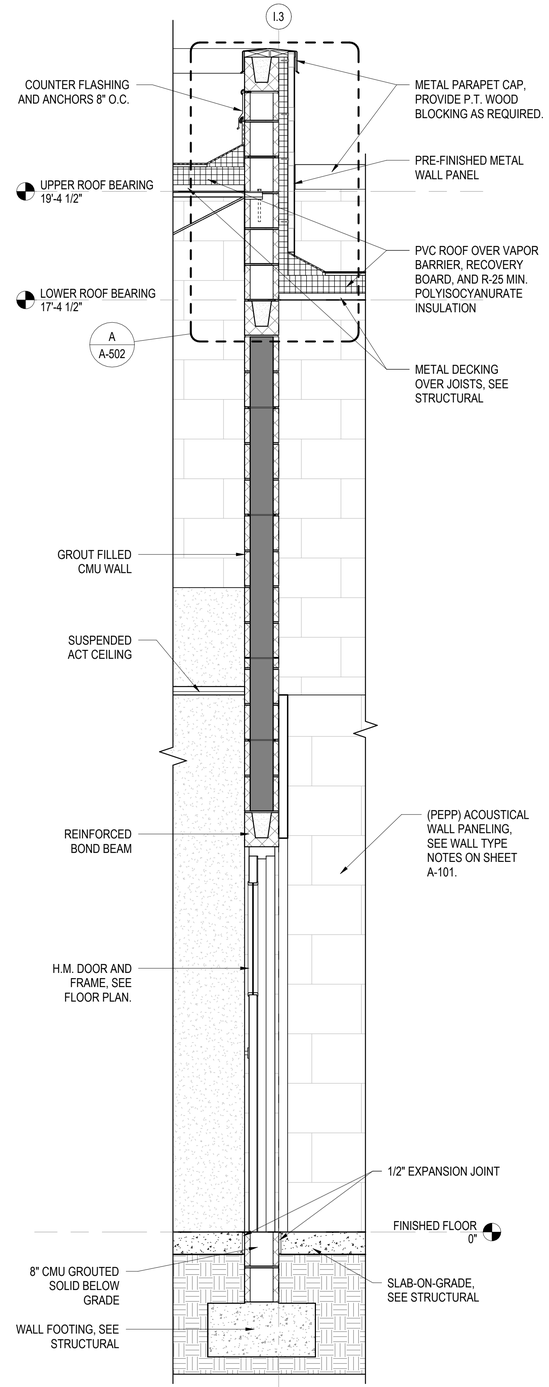

D WALL SECTION AT RANGE INTERIOR WALL

SCALE: 3/4" = 1'-0" (A-301)

3/4" =1'-0" 0' 1' 2' 3'

WALKER the GROUP ARCHITECTURE incorporated
PO BOX 541, NEW BERN, NC 28563
252-636-8778

Christopher B. Walker REGISTERED SEAL 15616 07/28/25 ARCHITECT NORTH CAROLINA

THE WALKER GROUP ARCHITECTURE INCORPORATED REGISTERED ARCHITECTURAL CORPORATION CERT. NO. 51132 NORTH CAROLINA NEW BERN, NC

CRAVEN COMMUNITY COLLEGE-PUBLIC SAFETY TRAINING CENTER

525 Executive Pkwy
New Bern, NC 28562

Bid Documents

SCO # 24-27879-01A

Revisions

No.	Date

Project Number: 2407.SAFE
Date: 07/28/25
Drawn: Author
Checked: CBW
Scale: AS NOTED

Drawing Title

INDOOR RANGE WALL SECTIONS

Sheet Number: 108 Of 158

Drawing Number: A-305

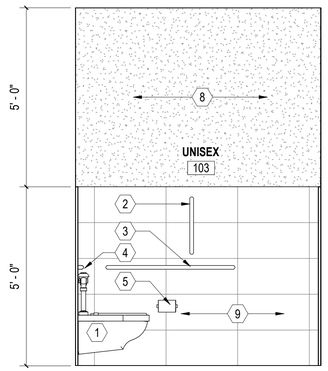

A INTERIOR ELEVATION 01

SCALE: 1/2" = 1'-0" (A-401)

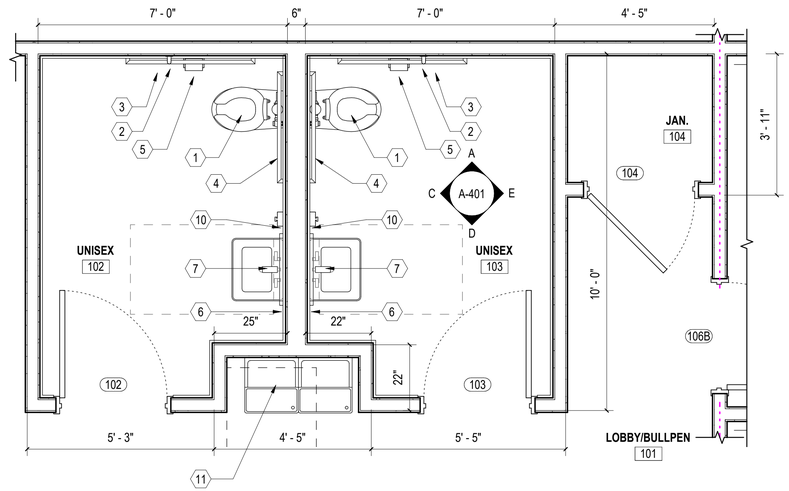

B ENLARGED FLOOR PLAN

SCALE: 1/2" = 1'-0" (A-101)

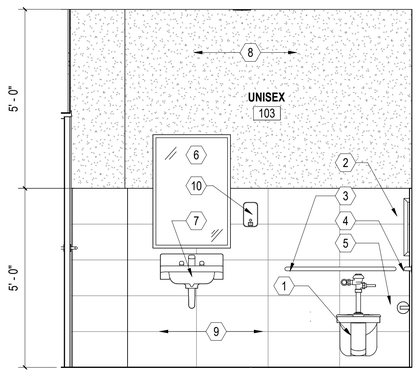

C INTERIOR ELEVATION 02

SCALE: 1/2" = 1'-0" (A-401)

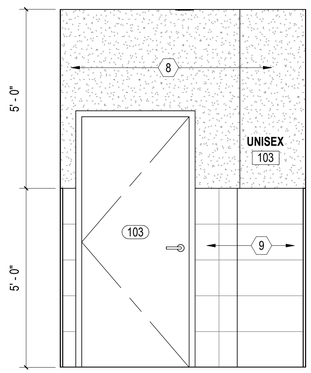

D INTERIOR ELEVATION 03

SCALE: 1/2" = 1'-0" (A-401)

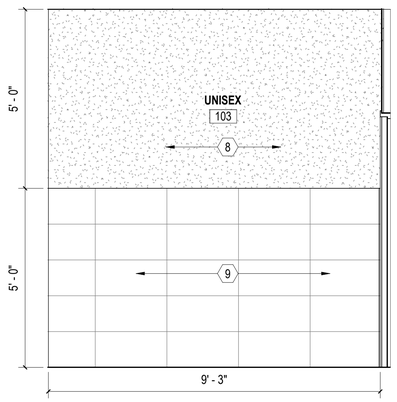

E INTERIOR ELEVATION 04

SCALE: 1/2" = 1'-0" (A-401)

GENERAL SHEET NOTES

1. SEE CIVIL, STRUCTURAL, MECHANICAL, ELECTRICAL, AND PLUMBING DRAWINGS FOR ADDITIONAL NOTES.
2. SEE SCHEDULES FOR WALL TYPES, DOOR/FRAME/WINDOW TYPES AND SIZES, AND FLOOR/WALL/CEILING FINISHES.
3. PROTECT EXISTING ITEMS TO REMAIN.

KEYNOTES

MARK	DESCRIPTION
1	WALL MOUNTED FLUSH VALVE ADA TOILET SEE B/A-003. SEE PLUMBING.
2	18" GRAB BAR. SEE DETAILS B&C/ A-003.
3	42" GRAB BAR. SEE DETAILS B&C/A-003.
4	36" GRAB BAR. SEE DETAILS B&C/A-003.
5	TOILET TISSUE DISPENSER. SEE DETAIL B/A-003.
6	24" x 36" MIRROR WITH STAINLESS STEEL FRAME. SEE DETAIL B/A-003.
7	WALL MOUNTED SINK WITH FAUCET. SEE DETAILS A&B/A-003. SEE PLUMBING.
8	PAINTED GYPSUM BOARD.
9	5' TILE WAINSCOT, SEE DETAIL H/A-503.
10	WALL MOUNTED SOAP DISPENSER. SEE DETAIL B/A-003.
11	HI-LOW WATER COOLER, SEE DETAIL D/A-003, SEE PLUMBING.

WALL TYPE NOTES:

1. STC-55 WALL ASSEMBLY; 3 5/8" STEEL STUDS 20 GA. 24" O.C., 3 1/2" GLASS FIBER INSULATION, 5/8" FIRE-SHIELD GYPSUM BOARD ON ONE SIDE AND 5/8" SOUNDBREAK XP GYPSUM BOARD ON THE OTHER.

GRAPHIC SCALE(S)

1/2" =1'-0" 0' 1' 2' 4'

WALKER the GROUP ARCHITECTURE incorporated
PO BOX 541, NEW BERN, NC 28563
252-636-8778

Christopher B. Walker REGISTERED SEAL 15616 07/28/25 ARCHITECT NORTH CAROLINA

THE WALKER GROUP ARCHITECTURE INCORPORATED REGISTERED ARCHITECTURAL CORPORATION CERT. NO. 51132 NORTH CAROLINA NEW BERN, NC

CRAVEN COMMUNITY COLLEGE-PUBLIC SAFETY TRAINING CENTER

525 Executive Pkwy
New Bern, NC 28562

Bid Documents

SCO # 24-27879-01A

Revisions

No.	Date

Project Number: 2407.SAFE
Date: 07/28/25
Drawn: TRA
Checked: CBW
Scale: AS NOTED

Drawing Title

INDOOR RANGE ENLARGED PLAN & INT. ELEVATIONS

Sheet Number: 109 Of 158

Drawing Number

A-401

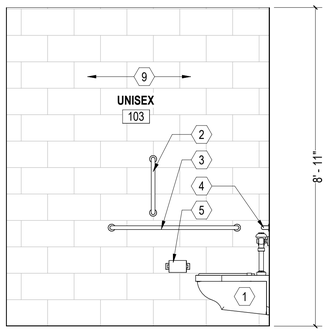

A REHAB INTERIOR ELEVATION 01

SCALE: 1/2" = 1'-0" (A-402)

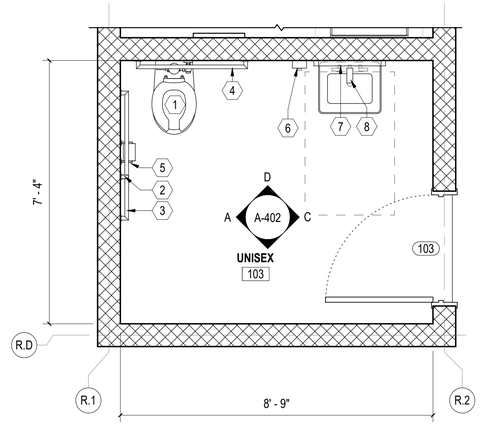

B REHAB SHELTER ENLARGED FLOOR PLAN

SCALE: 1/2" = 1'-0" (A-102)

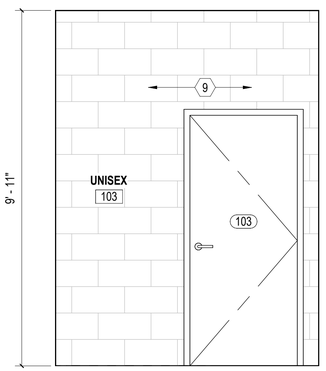

C REHAB NTERIOR ELEVATION 02

SCALE: 1/2" = 1'-0" (A-402)

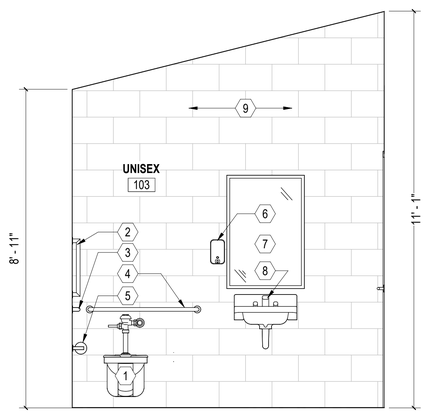

D REHAB INTERIOR ELEVATION 03

SCALE: 1/2" = 1'-0" (A-402)

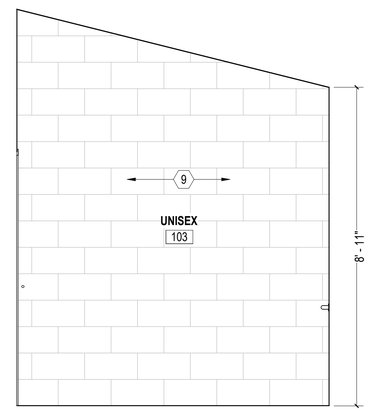

E REHAB INTERIOR ELEVATION 04

SCALE: 1/2" = 1'-0" (A-402)

GENERAL SHEET NOTES

1. SEE CIVIL, STRUCTURAL, MECHANICAL, ELECTRICAL, AND PLUMBING DRAWINGS FOR ADDITIONAL NOTES.
2. SEE SCHEDULES FOR WALL TYPES, DOOR/FRAME/WINDOW TYPES AND SIZES, AND FLOOR/WALL/CEILING FINISHES.
3. PROTECT EXISTING ITEMS TO REMAIN.

KEYNOTES

MARK	DESCRIPTION
1	WALL MOUNTED FLUSH VALVE ADA TOILET SEE B/A-003. SEE PLUMBING.
2	18" GRAB BAR. SEE DETAILS B&C/ A-003.
3	42" GRAB BAR. SEE DETAILS B&C/A-003.
4	36" GRAB BAR. SEE DETAILS B&C/A-003.
5	TOILET TISSUE DISPENSER. SEE DETAIL B/A-003.
6	WALL MOUNTED SOAP DISPENSER. SEE DETAIL B/A-003.
7	24" x 36" MIRROR WITH STAINLESS STEEL FRAME. SEE DETAIL B/A-003.
8	WALL MOUNTED SINK WITH FAUCET. SEE DETAILS A&B/A-003. SEE PLUMBING.
9	8" CMU. PAINT.

NOTE: WORK RELATED TO REHAB SHELTERS IS CONSIDERED BID ALTERNATE 03, SEE SHEET GI001.

GRAPHIC SCALE(S)

1/2" =1'-0" 0' 1' 2' 4'

WALKER the GROUP ARCHITECTURE incorporated
PO BOX 541, NEW BERN, NC 28563
252-636-8778

Christopher B. Walker REGISTERED SEAL 15616 ARCHITECT NORTH CAROLINA 07/28/25

THE WALKER GROUP ARCHITECTURE INCORPORATED REGISTERED ARCHITECTURAL CORPORATION CERT. NO. 51132 NORTH CAROLINA NEW BERN, NC

CRAVEN COMMUNITY COLLEGE- PUBLIC SAFETY TRAINING CENTER

525 Executive Pkwy
New Bern, NC 28562

Bid Documents

SCO # 24-27879-01A

No.	Date	Revisions

Project Number 2407.SAFE
Date 07/28/25
Drawn TRA
Checked CBW
Scale AS NOTED

Drawing Title

REHAB SHELTER ENLARGED PLAN & INT. ELEVATIONS

Sheet Number 110 Of 158

Drawing Number

A-402

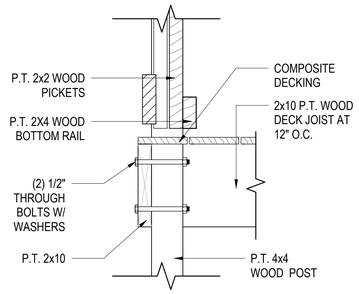

A EDGE BEAM TO COLUMN SECTION

SCALE: 1 1/2" = 1'-0" (A-403)

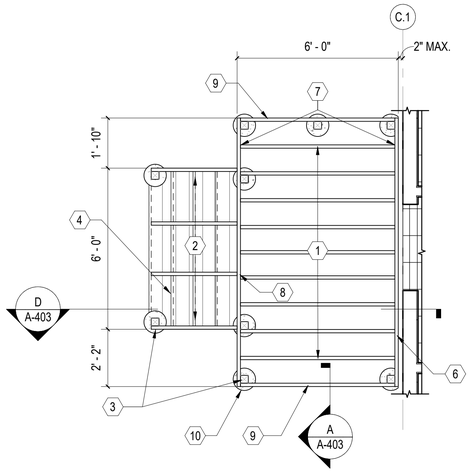

B REAR DECK FRAMING PLAN

SCALE: 3/8" = 1'-0" (A-105)

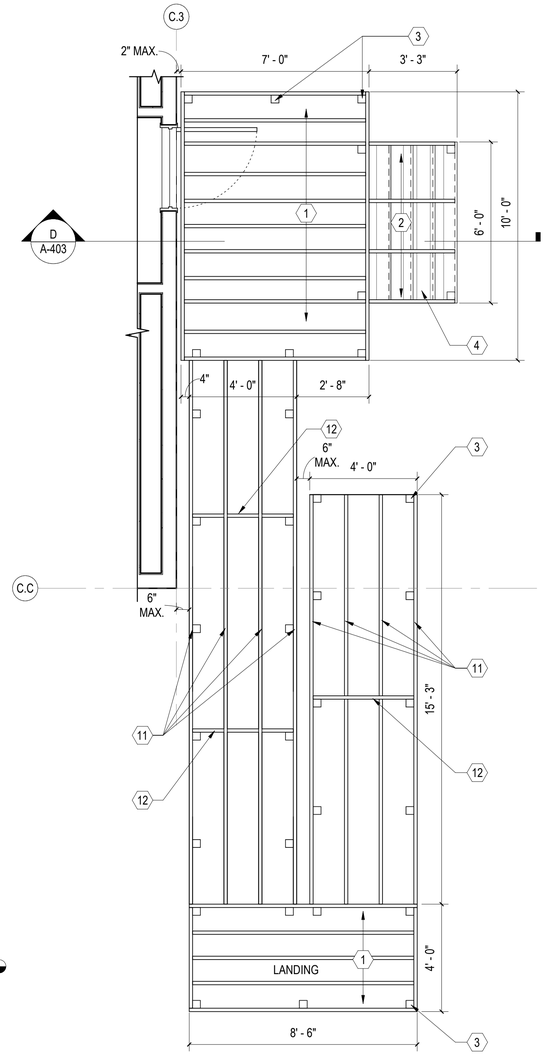

C STAIR AND RAMP FRAMING PLAN

SCALE: 3/8" = 1'-0" (A-105)

PLAN NORTH

NOTE:
WOOD RAMP AND STAIRS MUST MEET ICC A117.1 2009 REQUIRMENTS. CONTRACTOR TO FACTOR APPROXIMATELY 1'-0" OF ELEVATION DIFFERENCE BETWEEN DRAWINGS AND FIELD CONDITIONS.

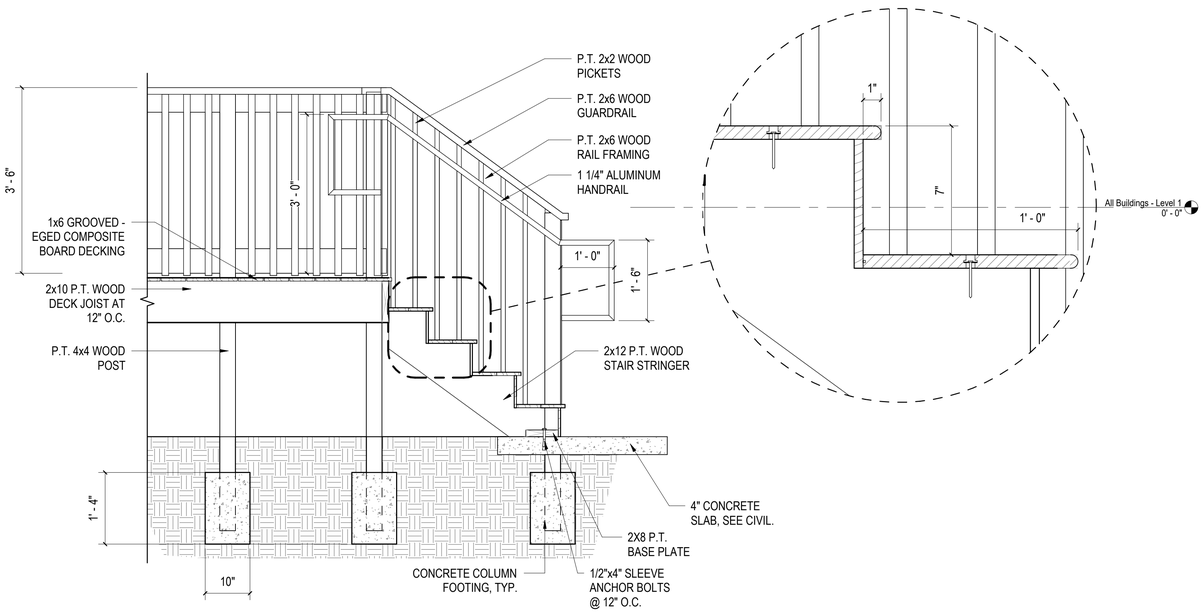

D STAIR SECTION

SCALE: 3/4" = 1'-0" (A-403)

GENERAL SHEET NOTES

1. SEE CIVIL, STRUCTURAL, MECHANICAL, ELECTRICAL, AND PLUMBING DRAWINGS FOR ADDITIONAL NOTES.
2. SEE SCHEDULES FOR WALL TYPES, DOOR/FRAME/WINDOW TYPES AND SIZES, AND FLOOR/WALL/CEILING FINISHES.
3. PROTECT EXISTING ITEMS TO REMAIN.

NEW WORK KEYNOTES

MARK	DESCRIPTION
1	P.T. 2x10 WOOD JOIST @ 12" O.C. TYPICAL.
2	P.T. 2x12 STAIR STRINGERS.
3	P.T. 4x4 WOOD RAILING POST. TYPICAL AT ALL EXTERIOR RAILING LOCATIONS.
4	PRESSURE TREATED WOOD FRAMED STAIRS WITH COMPOSITE DECKING. DECK CONSTRUCTION BASED ON 100 PSF LIVE LOAD MINIMUM. SEE DETAIL B/A-301.
6	P.T. 2x10 WOOD LEDGER. BOLTED TO RIM BAND WITH 1/2" ANCHOR BOLTS AT 12" O.C..
7	FACE-MOUNTED JOIST HANGERS W/ SDS SCREWS. TYPICAL AT ALL JOIST.
8	P.T. 2x10 WOOD RIM JOIST/BEAM. SEE DETAIL C/A-104.
9	P.T. 2x10 WOOD OUTER JOIST. SEE DETAIL C/A-104.
10	3000 PSI CONCRETE COLUMN FOOTING. SEE DETAIL B/A-301 FOR MORE INFORMATION. TYPICAL.
11	P.T. 2x10 WOOD RAMP STRINGERS. RAMP CONSTRUCTION BASED ON 100 PSF LIVE LOAD MINIMUM.
12	P.T. 2x10 RAMP LEDGER. STRINGERS TO BE ATTACHED WITH FACE-MOUNTED JOIST HANGERS W/ SDS SCREWS.

NOTE: WORK RELATED TO MODULAR CLASSROOM AND STAIRS/RAMPS IS CONSIDERED BID ALTERNATE 02, SEE SHEET GI001.

GRAPHIC SCALE(S)

3/8" =1'-0" 0' 2' 4' 6'

3/4" =1'-0" 0' 1' 2' 3'

1 1/2" =1'-0" 0' 4" 8" 1'-4"

WALKER the GROUP ARCHITECTURE incorporated
PO BOX 541, NEW BERN, NC 28563
252-636-8778

Christopher B. Walker REGISTERED SEAL 15616 07/28/25 ARCHITECT NORTH CAROLINA

THE WALKER GROUP ARCHITECTURE INCORPORATED REGISTERED ARCHITECTURAL CORPORATION CERT. NO. 51132 NORTH CAROLINA NEW BERN, NC

CRAVEN COMMUNITY COLLEGE-PUBLIC SAFETY TRAINING CENTER

525 Executive Pkwy
New Bern, NC 28562

Bid Documents

SCO # 24-27879-01A

Revisions

No.	Date

Project Number: 2407.SAFE
Date: 07/28/25
Drawn: TRA
Checked: CBW
Scale: AS NOTED

Drawing Title

ENLARGED DECK & RAMP FRAMING PLAN

Sheet Number
111 Of 158

Drawing Number
A-403

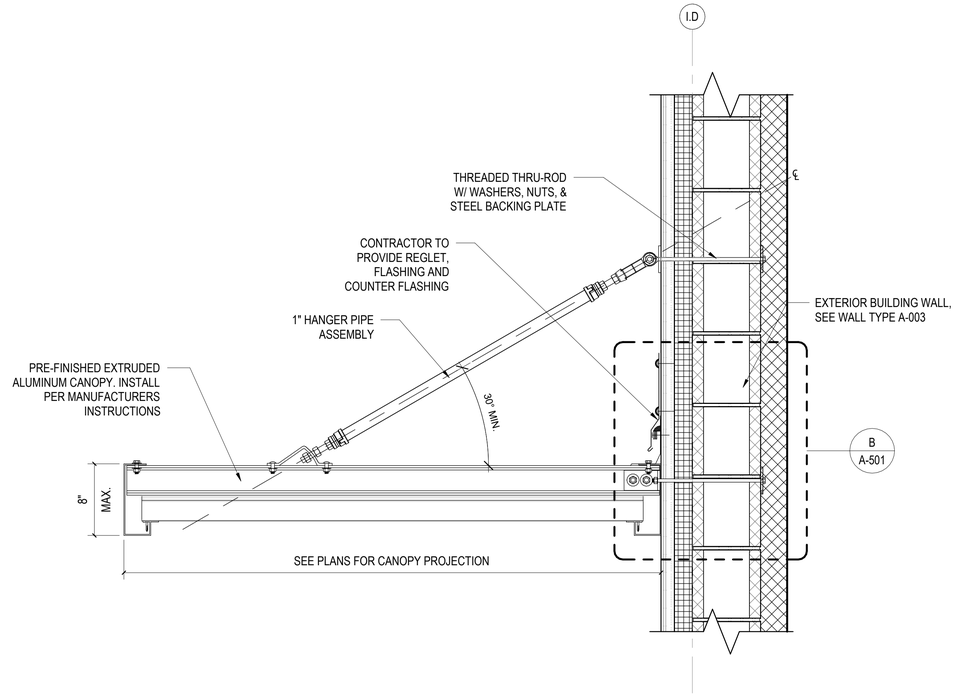

A INDOOR RANGE - CANOPY SECTION

SCALE: 1 1/2" = 1'-0" (A-501)

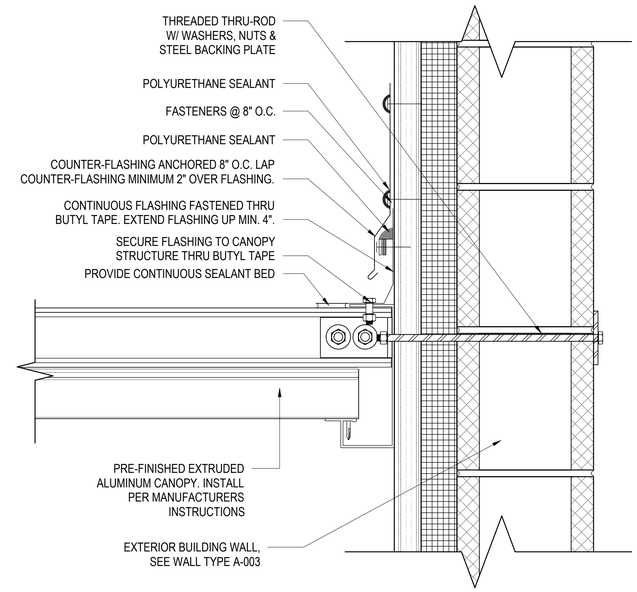

B (TYP) CANOPY FLASHING DETAIL

SCALE: 3" = 1'-0" (A-501)

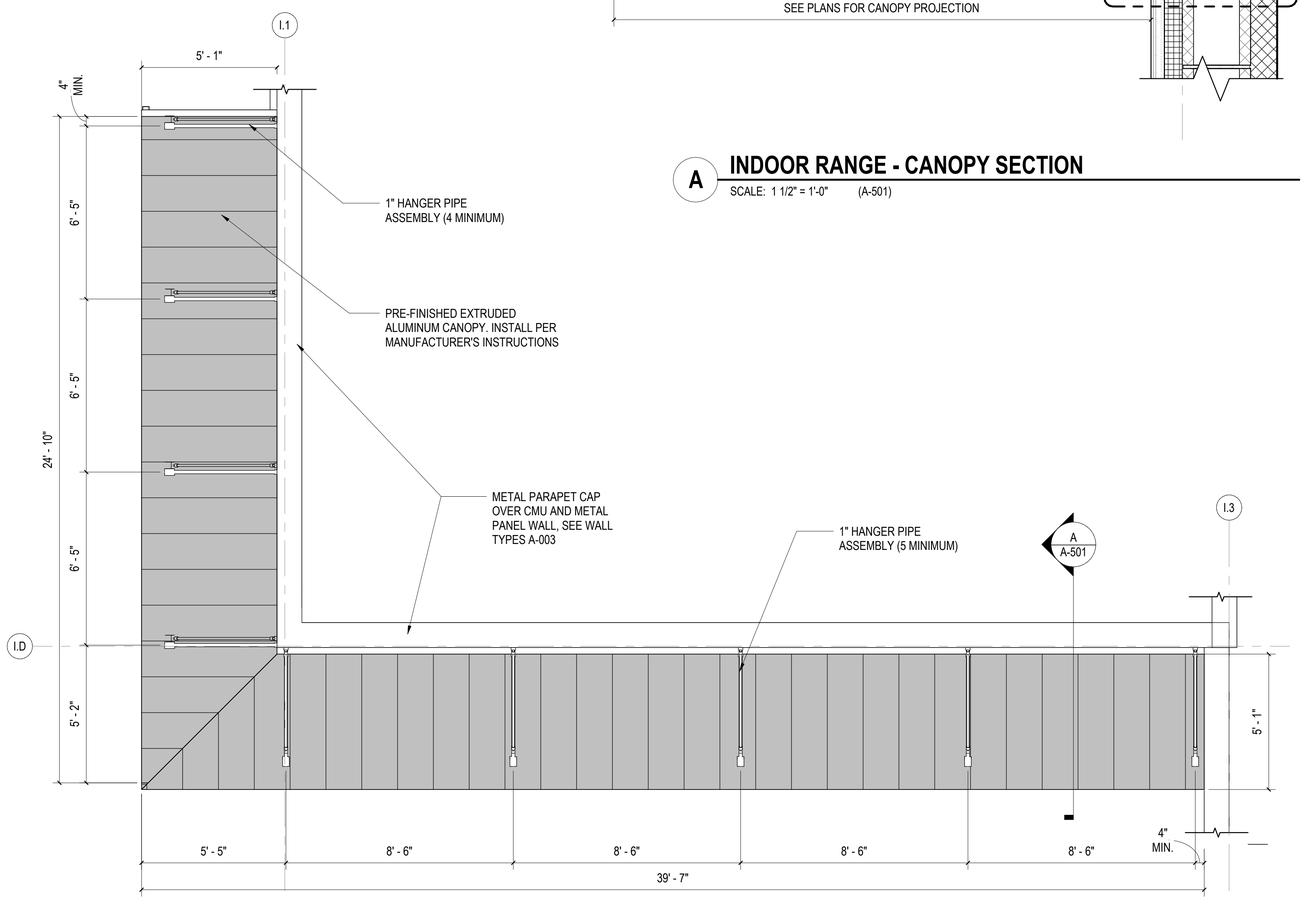

C INDOOR RANGE ROOF PLAN - CANOPY PLAN

SCALE: 3/8" = 1'-0" (A-109)

WALKER the GROUP ARCHITECTURE incorporated
PO BOX 541, NEW BERN, NC 28563
252-636-8778

Christopher B. Walker REGISTERED SEAL 15616 07/28/25 ARCHITECT NORTH CAROLINA

THE WALKER GROUP ARCHITECTURE INCORPORATED REGISTERED ARCHITECTURAL CORPORATION CERT. NO. 51132 NORTH CAROLINA NEW BERN, NC

CRAVEN COMMUNITY COLLEGE- PUBLIC SAFETY TRAINING CENTER

525 Executive Pkwy
New Bern, NC 28562

Bid Documents

SCO # 24-27879-01A

Revisions

No.	Date

Project Number: 2407.SAFE
Date: 07/28/25
Drawn: TRA
Checked: CBW
Scale: AS NOTED

Drawing Title

CANOPY DETAILS

Sheet Number
112 Of 158

Drawing Number
A-501

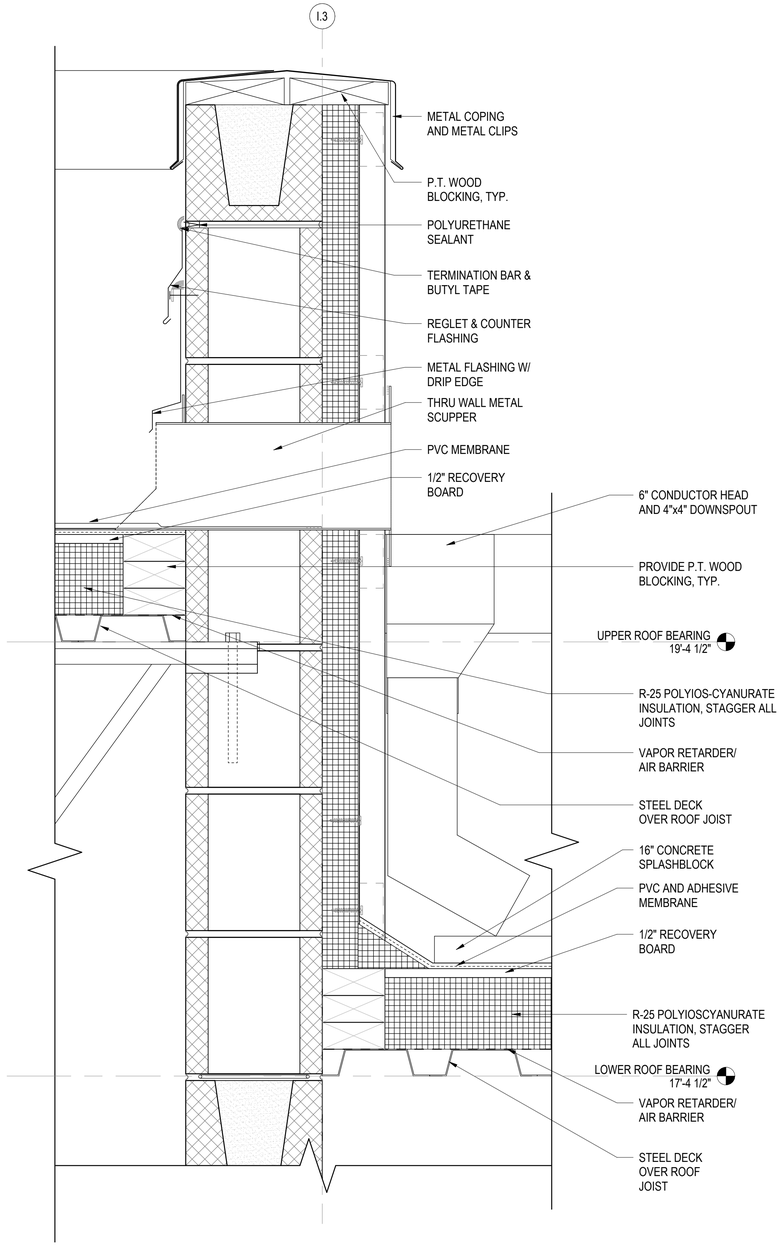

A WALL SCUPPER DETAIL @ INTERIOR ROOF WALL

SCALE: 3" = 1'-0" (A-305)

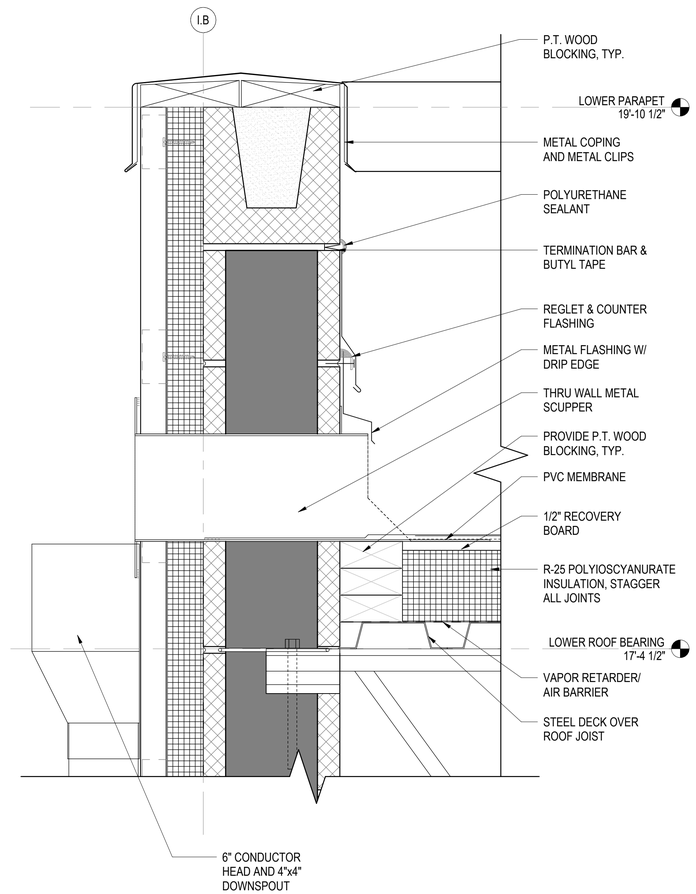

B WALL SCUPPER DETAIL @ LOWER RANGE ROOF

SCALE: 3" = 1'-0" (A-305)

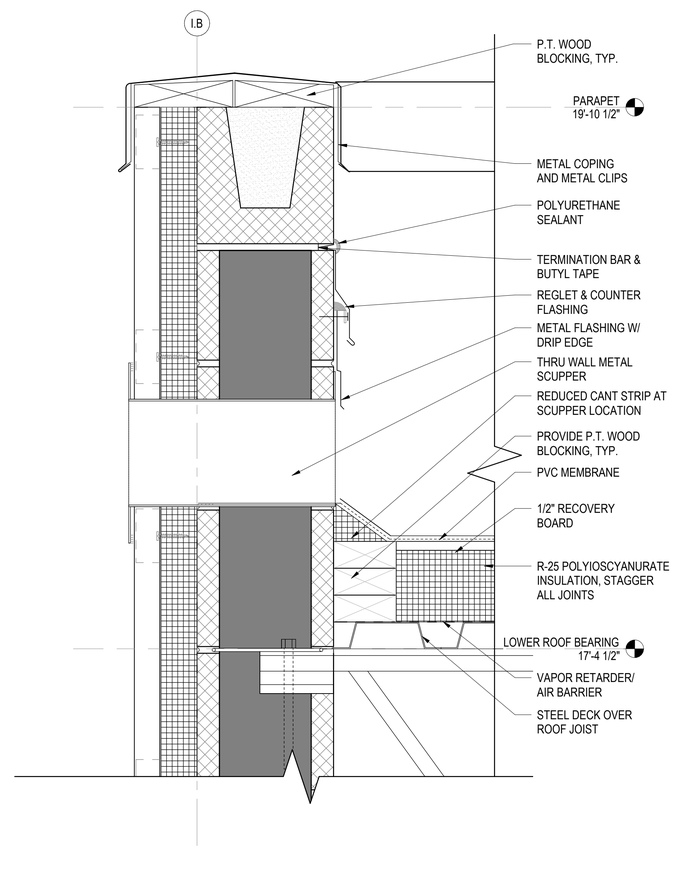

C TYPICAL OVERFLOW WALL SCUPPER DETAIL

SCALE: 3" = 1'-0" (A-305)

3" =1'-0" 0' 3" 6" 9"

WALKER the GROUP ARCHITECTURE incorporated
PO BOX 541, NEW BERN, NC 28563
252-636-8778

Christopher B. Walker REGISTERED SEAL 15616 07/28/25 ARCHITECT NORTH CAROLINA

THE WALKER GROUP ARCHITECTURE INCORPORATED REGISTERED ARCHITECTURAL CORPORATION CERT. NO. 51132 NORTH CAROLINA NEW BERN, NC

CRAVEN COMMUNITY COLLEGE-PUBLIC SAFETY TRAINING CENTER

525 Executive Pkwy
New Bern, NC 28562

Bid Documents

SCO # 24-27879-01A

Revisions

No.	Date

Project Number: 2407.SAFE
Date: 07/28/25
Drawn: TRA
Checked: CBW
Scale: AS NOTED
Drawing Title

ROOF DETAILS

Sheet Number: 113 Of 158
Drawing Number: A-502

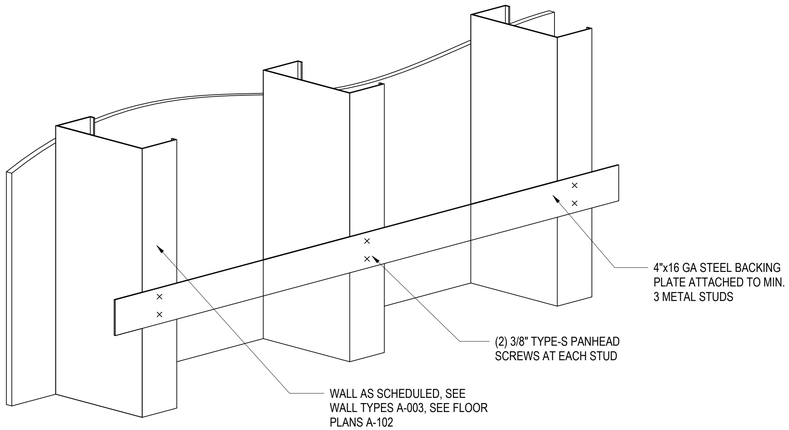

A (TYP) STRAP BACK (LIGHTLY LOADED LESS THAN 250 LBS)

SCALE: 1 1/2" = 1'-0"

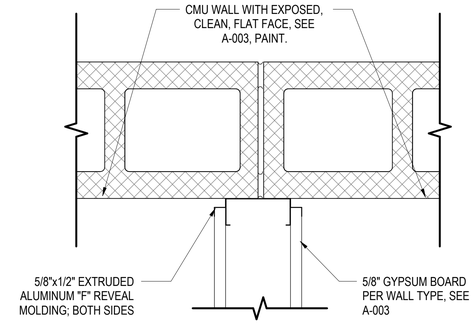

B CMU WALL TO GYP.BD. TRANSITION

SCALE: 3" = 1'-0"

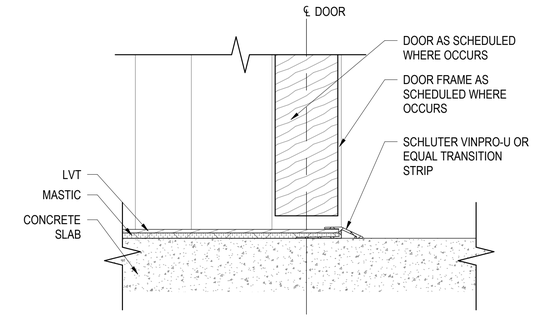

C (TYP) TRANSITION DETAIL @ LVT FLOOR TO S.CONCRETE

SCALE: 6" = 1'-0"

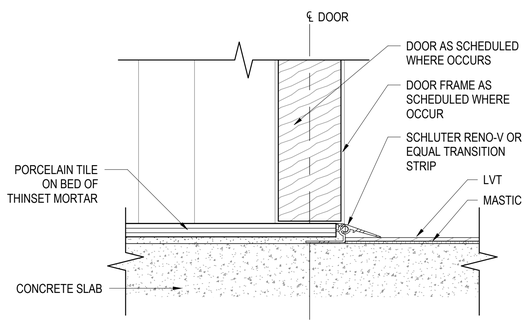

D (TYP) TRANSITION DETAIL @ LVT FLOOR TO TILE

SCALE: 6" = 1'-0"

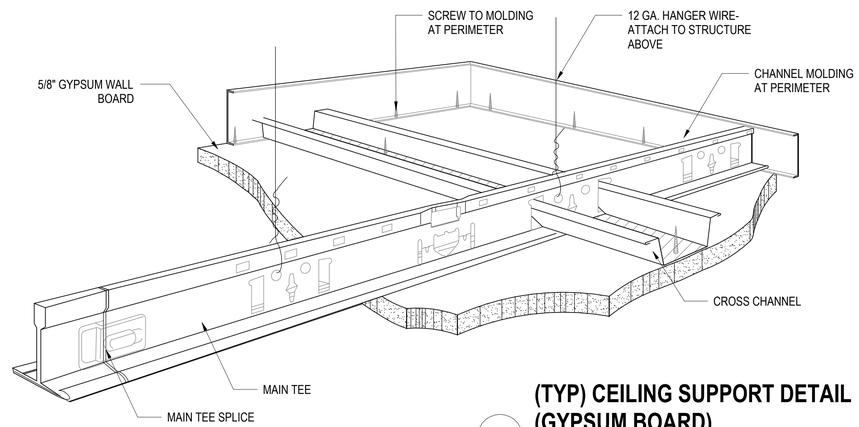

E (TYP) CEILING SUPPORT DETAIL (GYPSUM BOARD)

SCALE: 1 1/2" = 1'-0"

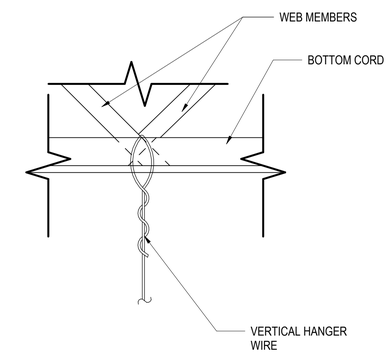

F (TYP) HANGER WIRE CONNECTION

SCALE: 6" = 1'-0"

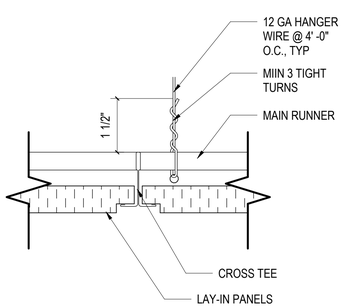

CROSS-TEE SECTION

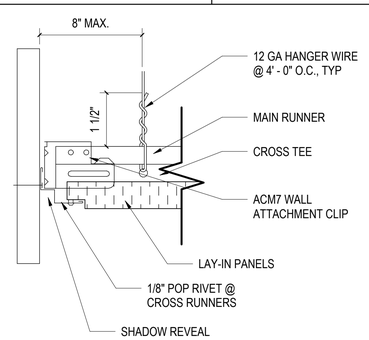

WALL ATTACHMENT SECTION

G (TYP) CEILING SUPPORT DETAIL (LAY-IN)

SCALE: 6" = 1'-0"

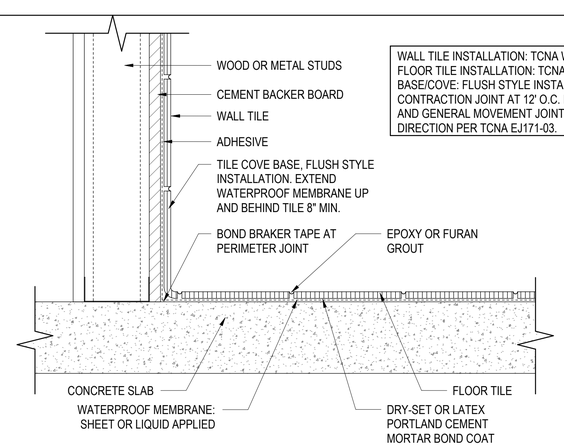

WALL TILE INSTALLATION: TCNA W223
FLOOR TILE INSTALLATION: TCNA F115-03
BASE/COVE: FLUSH STYLE INSTALLATION PROVIDE CONTRACTION JOINT AT 12' O.C. IN EACH DIRECTION AND GENERAL MOVEMENT JOINTS AT 24" O.C. IN EACH DIRECTION PER TCNA EJ171-03.

H TYPICAL TILE INSTALLATION DETAIL

SCALE: 3" = 1'-0"

1 1/2" =1'-0" 0' 4" 8" 1'-4"

3" =1'-0" 0' 3" 6" 9"

6" = 1'-0" 0" 1 1/2" 3" 6"

WALKER the GROUP ARCHITECTURE incorporated
PO BOX 541, NEW BERN, NC 28563
252-636-8778

Christopher B. Walker REGISTERED SEAL 15616 ARCHITECT NORTH CAROLINA 07/28/25

THE WALKER GROUP ARCHITECTURE INCORPORATED REGISTERED ARCHITECTURAL CORPORATION CERT. NO. 51132 NORTH CAROLINA NEW BERN, NC

CRAVEN COMMUNITY COLLEGE- PUBLIC SAFETY TRAINING CENTER

525 Executive Pkwy
New Bern, NC 28562

Bid Documents

SCO # 24-27879-01A

Revisions

No.	Date

Project Number: 2407.SAFE
Date: 07/28/25
Drawn: TRA
Checked: CBW
Scale: AS NOTED

Drawing Title

INTERIOR DETAILS

Sheet Number: 114 Of 158

Drawing Number: A-503

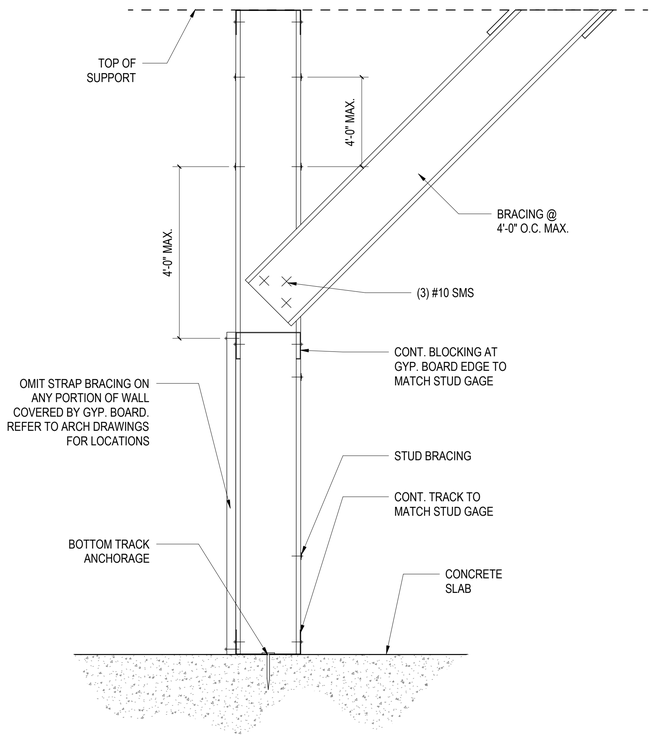

A TYPICAL WALL SECTION @ FRAMING

SCALE: 3" = 1'-0"

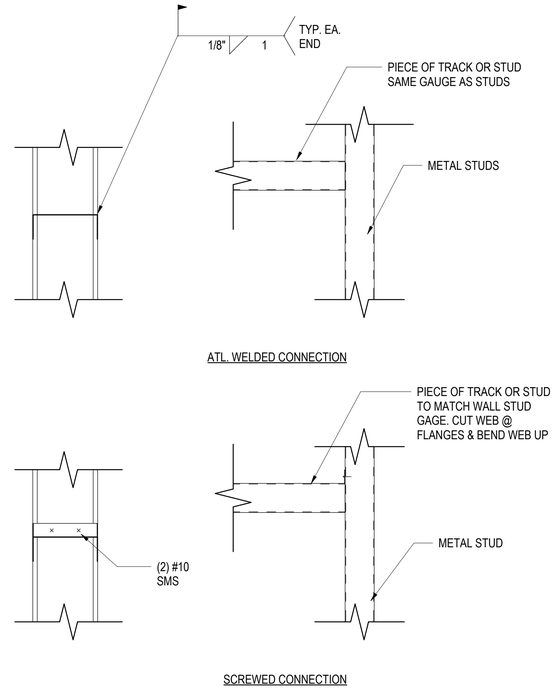

B TYPICAL METAL STUD BLOCKING

SCALE: 3" = 1'-0"

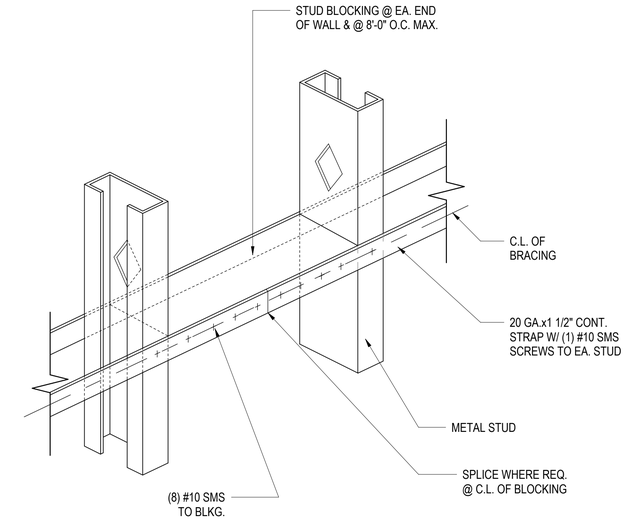

C TYPICAL METAL STUD BRACING

SCALE: 3" = 1'-0"

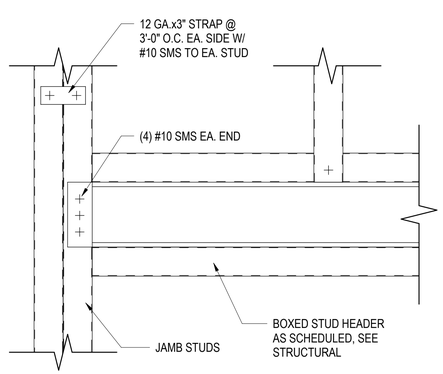

D TYPICAL BOXED HEADER @ JAMB

SCALE: 3" = 1'-0"

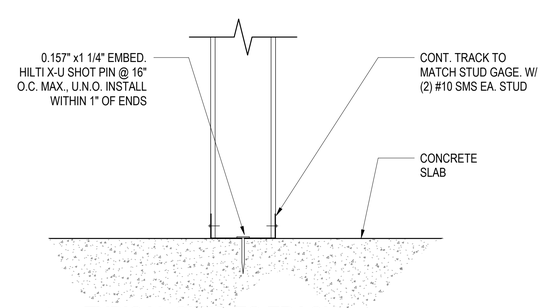

E TYPICAL STUD TO TRACK

SCALE: 3" = 1'-0"

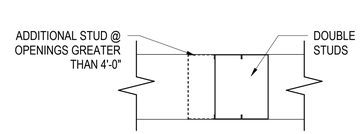

F TYPICAL JAMB STUDS

SCALE: 3" = 1'-0"

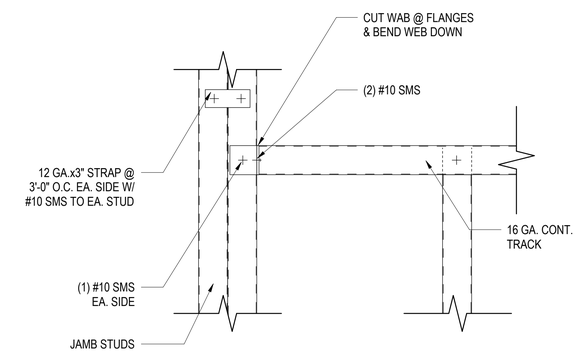

G TYPICAL TRACK TO JAMB

SCALE: 3" = 1'-0"

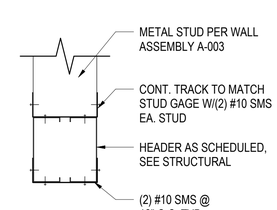

H TYPICAL BOX HEADER

SCALE: 3" = 1'-0"

3" =1'-0" 0' 3" 6" 9"

WALKER the GROUP ARCHITECTURE incorporated
PO BOX 541, NEW BERN, NC 28563
252-636-8778

Christopher B. Walker REGISTERED SEAL 15616 ARCHITECT NORTH CAROLINA 07/28/25

THE WALKER GROUP ARCHITECTURE INCORPORATED REGISTERED ARCHITECTURAL CORPORATION CERT. NO. 51132 NORTH CAROLINA NEW BERN, NC

CRAVEN COMMUNITY COLLEGE-PUBLIC SAFETY TRAINING CENTER

525 Executive Pkwy
New Bern, NC 28562

Bid Documents

SCO # 24-27879-01A

Revisions

No.	Date

Project Number: 2407.SAFE
Date: 07/28/25
Drawn: TRA
Checked: CBW
Scale: AS NOTED

Drawing Title

METAL STUD FRAMING DETAILS

Sheet Number: 115 Of 158

Drawing Number: A-504

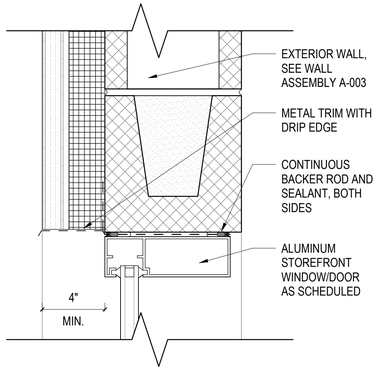

A STOREFRONT HEAD DETAIL @ METAL PANEL AND CMU WALL

SCALE: 3" = 1'-0"

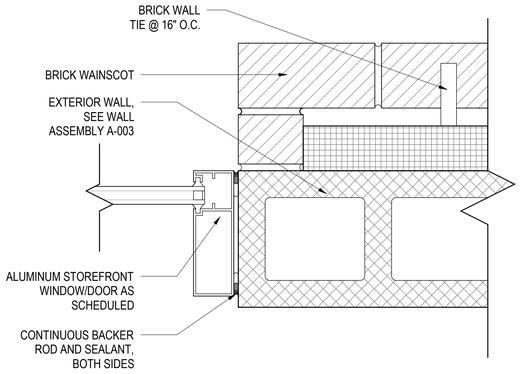

B STOREFRONT JAMB DETAIL @ METAL PANEL AND CMU WALL

SCALE: 3" = 1'-0"

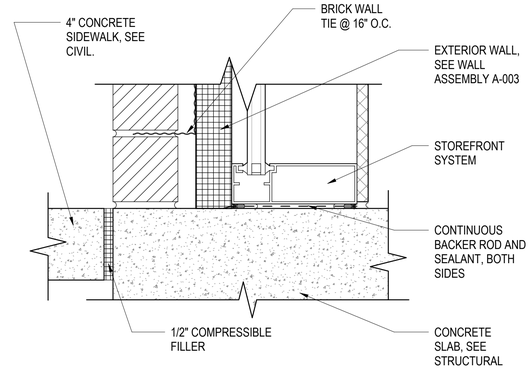

C STOREFRONT SILL DETAIL @ METAL PANEL AND CMU WALL

SCALE: 3" = 1'-0"

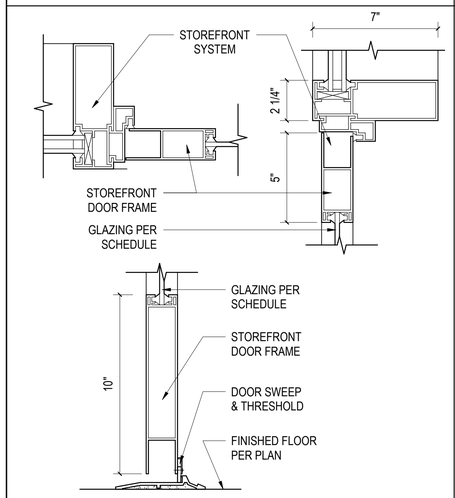

D (S9) STOREFRONT DOOR DETAIL

SCALE: 3" = 1'-0"

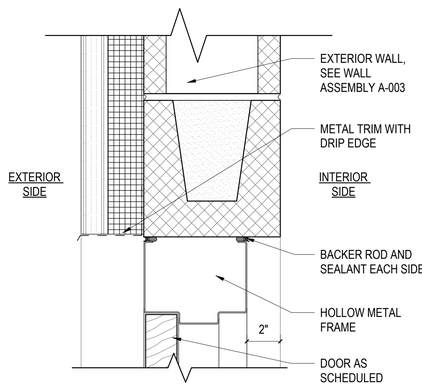

E H.M. DOOR HEAD DETAIL @ METAL PANEL AND CMU WALL

SCALE: 3" = 1'-0"

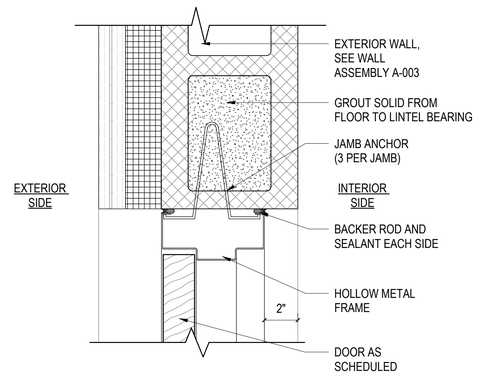

F H.M. DOOR JAMB DETAIL @ METAL PANEL AND CMU WALL

SCALE: 3" = 1'-0"

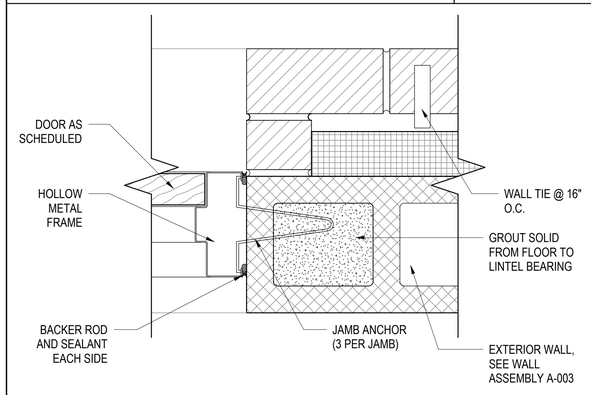

G H.M. DOOR JAMB DETAIL @ BRICK AND CMU WALL

SCALE: 3" = 1'-0"

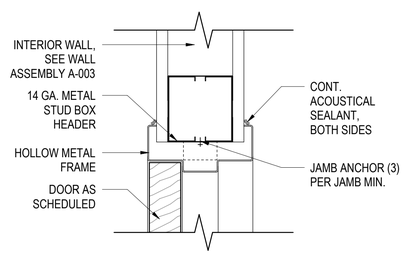

H INT. H.M. DOOR HEAD/JAMB DETAIL @ METAL STUD WALL

SCALE: 3" = 1'-0"

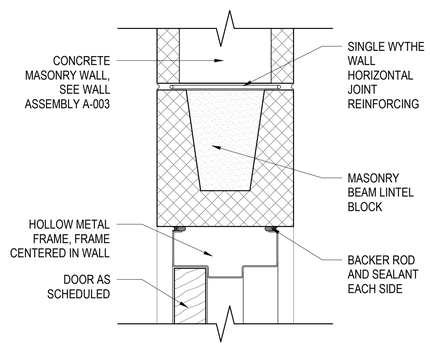

I INT. H.M. DOOR HEAD DETAIL @ CMU WALL

SCALE: 3" = 1'-0"

DOOR SCHEDULE

DOOR NO.	TYPE	DOOR SIZE WIDTH	DOOR SIZE HEIGHT	DOOR MATERIAL	FRAME TYPE	FRAME MATERIAL	DETAILS HEAD	DETAILS JAMB	REMARKS	BUILDING NAME
RANGE										
101	A	3'-0"	7'-0"	GLASS	S1	ALUM	D/A-601	D/A-601		RANGE
102	B	3'-0"	7'-0"	WOOD	F1	H.M.	H/A-601	H/A-601		RANGE
103	B	3'-0"	7'-0"	WOOD	F1	H.M.	H/A-601	H/A-601		RANGE
104	B	3'-0"	7'-0"	WOOD	F1	H.M.	H/A-601	H/A-601		RANGE
105	C	3'-0"	7'-0"	H.M.	F1	H.M.	I/A-6010	A/A-602		RANGE
106A	C	3'-0"	7'-0"	H.M.	F1	H.M.	I/A-6010	A/A-602		RANGE
106B	B	3'-0"	7'-0"	WOOD	F1	H.M.	H/A-601	H/A-601	4" X 30" VISION PANEL	RANGE
107	C	3'-0"	7'-0"	H.M.	F1	H.M.	I/A-6010	A/A-602		RANGE
108	C	6'-0"	7'-0"	H.M.	F2	H.M.	E/A-601	G/A-601		RANGE
109	C	3'-0"	7'-0"	WOOD	F1	H.M.	H/A-601	H/A-601	4" X 30" VISION PANEL	RANGE
110A	C	6'-0"	7'-0"	H.M.	F2	H.M.	E/A-601	F/A-601		RANGE
110B	C	3'-0"	7'-0"	H.M.	F1	H.M.	E/A-601	F/A-601		RANGE
110C	B	3'-0"	7'-0"	H.M.	F1	H.M.	E/A-601	F/A-601		RANGE
110D	B	3'-0"	7'-0"	H.M.	F1	H.M.	E/A-601	F/A-601	EGRESS DOOR ONLY, NO EXT. HDWARE	RANGE
REHAB										
101	C	3'-0"	7'-0"	H.M.	F1	H.M.	I/A-601	A/A-602		REHAB
102A	C	3'-0"	7'-0"	H.M.	F1	H.M.	I/A-601	A/A-602		REHAB
102B	D	8'-0"	7'-0"	MANUF.	MANUF.	-	A/A-602	H/A-602		REHAB
103	C	3'-0"	7'-0"	H.M.	F1	H.M.	I/A-601	A/A-602		REHAB

WINDOW SCHEDULE

MARK	WIDTH	HEIGHT	MATERIALS FRAME	MATERIALS FINISH	MATERIALS GLAZING	DETAILS HEAD	DETAILS JAMB	DETAILS SILL	COMMENTS
W1	7'-0"	5'-0"	ALUM	ANODIZED	1" INSUL.	E/A-602	F/A-602	G/A-602	
W2	5'-0"	7'-0"	ALUM	ANODIZED	1" INSUL.	B/A-602	C/A-602	D/A-602	

STOREFRONT SCHEDULE

MARK	WIDTH	HEIGHT	MATERIAL	FINISH	GLAZING	HEAD	JAMB	SILL	COMMENTS
S1	12' - 0"	10'-0"	ALUM	ANODIZED	1" INSUL.	A/A-601	B/A-601	C/A-601	

DOOR TYPES

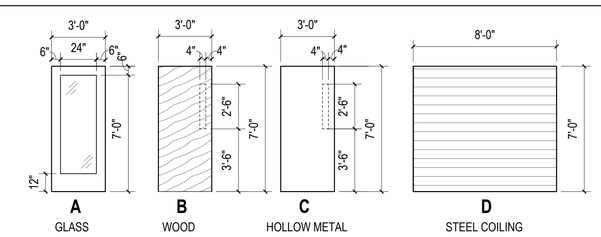

FRAME TYPES

NOTE: HOLLOW METAL FRAMES IN MASONRY WALLS TO HAVE A 4" FRAME @ THE HEAD

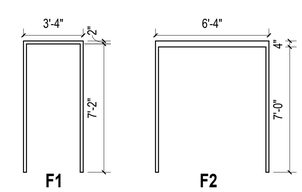

WINDOW TYPES

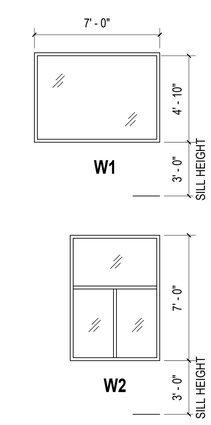

STOREFRONT TYPES

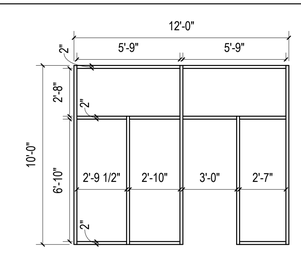

3" =1'-0"

0' 3" 6" 9"

WALKER the GROUP ARCHITECTURE incorporated
PO BOX 541, NEW BERN, NC 28563
252-636-8778

Christopher B. Walker REGISTERED SEAL 15616 07/28/25 ARCHITECT NORTH CAROLINA

THE WALKER GROUP ARCHITECTURE INCORPORATED REGISTERED ARCHITECTURAL CORPORATION CERT. NO. 51132 NORTH CAROLINA NEW BERN, NC

CRAVEN COMMUNITY COLLEGE-PUBLIC SAFETY TRAINING CENTER

525 Executive Pkwy
New Bern, NC 28562

Bid Documents

SCO # 24-27879-01A

Revisions

No. Date

Project Number: 2407.SAFE
Date: 07/28/25
Drawn: TRA
Checked: CBW
Scale: AS NOTED

Drawing Title

SCHEDULES & DETAILS

Sheet Number
116 Of 158

Drawing Number

A-601

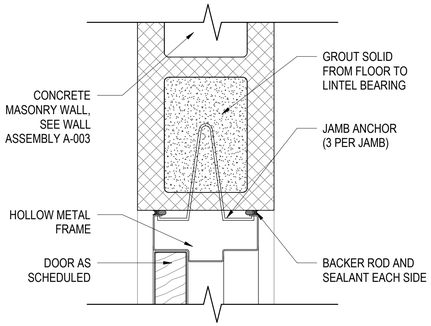

A INT. H.M. DOOR JAMB DETAIL @ CMU WALL

SCALE: 3" = 1'-0"

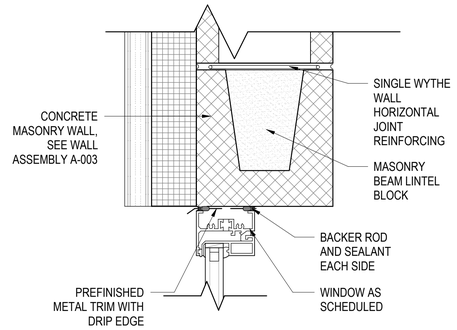

B WINDOW HEAD DETAIL @ METAL PANEL AND CMU WALL

SCALE: 3" = 1'-0"

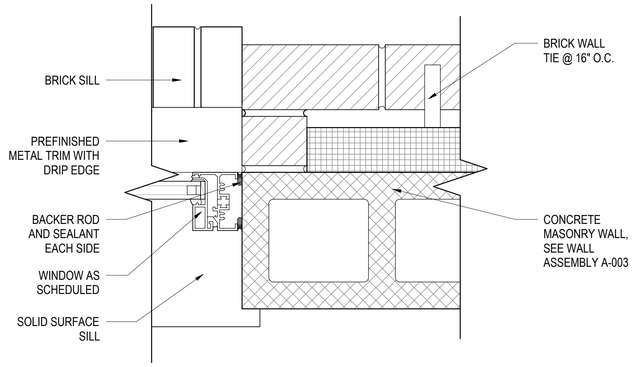

C WINDOW JAMB DETAIL @ METAL PANEL AND CMU WALL

SCALE: 3" = 1'-0"

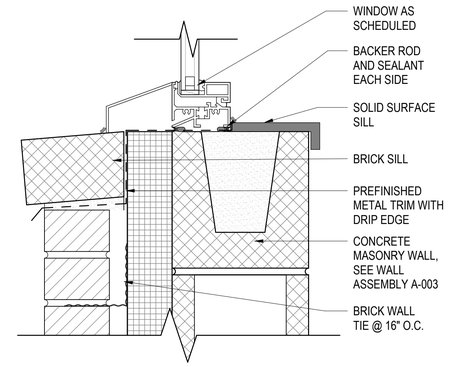

D WINDOW SILL DETAIL @ METAL PANEL AND CMU WALL

SCALE: 3" = 1'-0"

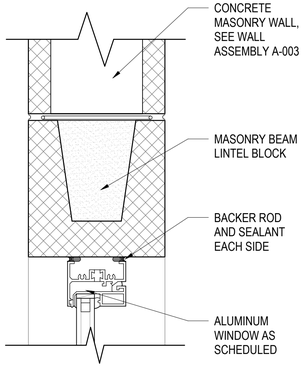

E WINDOW HEAD DETAIL @ CMU WALL

SCALE: 3" = 1'-0"

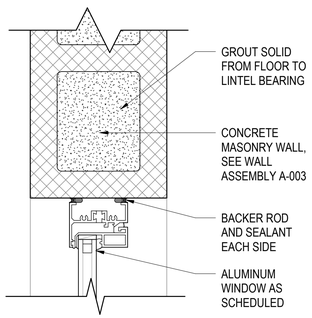

F WINDOW JAMB DETAIL @ CMU WALL

SCALE: 3" = 1'-0"

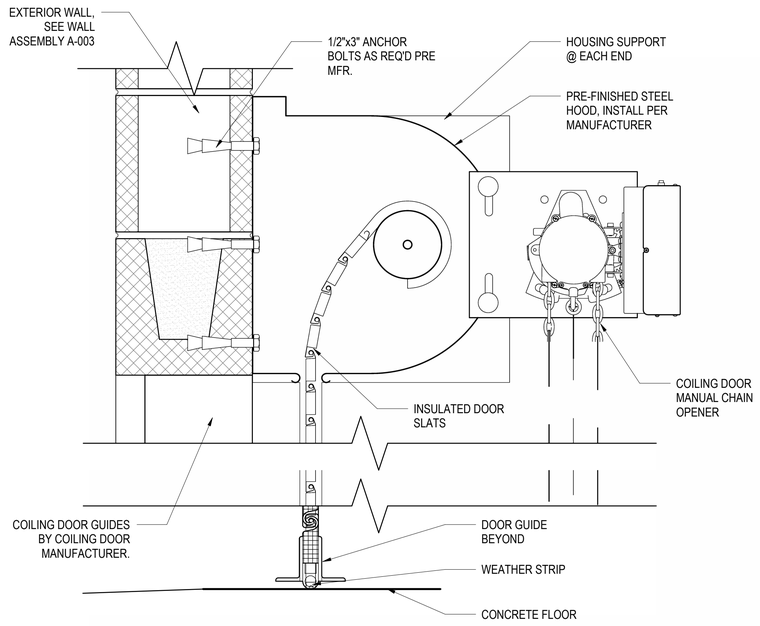

I COILING DOOR HEAD DETAIL @ CMU WALL

SCALE: 3" = 1'-0"

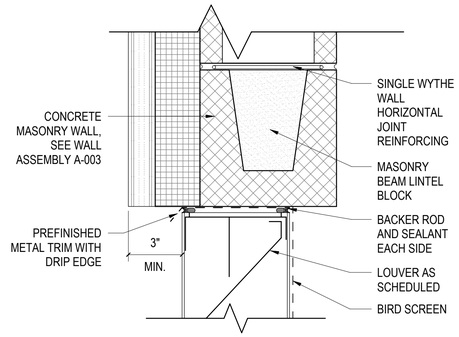

J LOUVER HEAD/JAMB DETAIL @ METAL PANEL AND CMU WALL

SCALE: 3" = 1'-0"

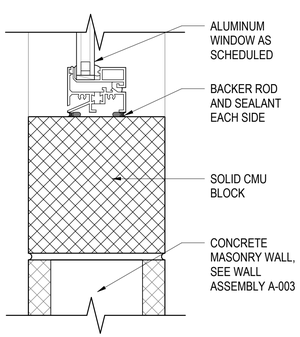

G WINDOW SILL DETAIL @ CMU WALL

SCALE: 3" = 1'-0"

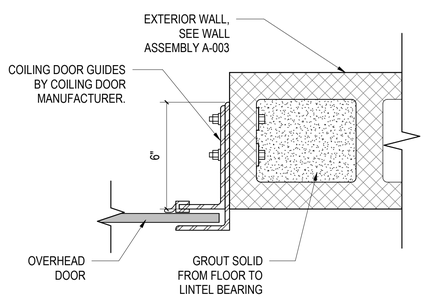

H COILING DOOR JAMB DETAIL @ CMU WALL

SCALE: 3" = 1'-0"

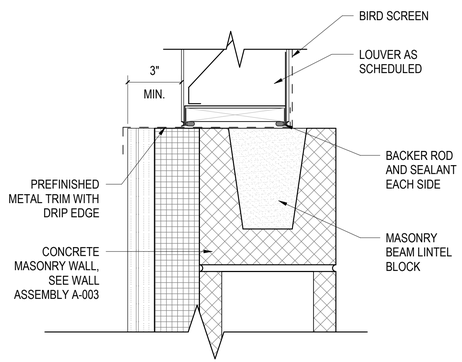

K LOUVER SILL DETAIL @ METAL PANEL AND CMU WALL

SCALE: 3" = 1'-0"

3" =1'-0" 0' 3" 6" 9"

WALKER the GROUP ARCHITECTURE incorporated
PO BOX 541, NEW BERN, NC 28563
252-636-8778

Christopher B. Walker REGISTERED SEAL 15616 07/28/25 ARCHITECT NORTH CAROLINA

THE WALKER GROUP ARCHITECTURE INCORPORATED REGISTERED ARCHITECTURAL CORPORATION CERT. NO. 51132 NORTH CAROLINA NEW BERN, NC

CRAVEN COMMUNITY COLLEGE-PUBLIC SAFETY TRAINING CENTER

525 Executive Pkwy
New Bern, NC 28562

Bid Documents

SCO # 24-27879-01A

Revisions

No.	Date

Project Number 2407.SAFE	Date 07/28/25
Drawn TRA	Checked CBW
Scale AS NOTED	

Drawing Title

DETAILS

Sheet Number 117 Of 158

Drawing Number

A-602

GENERAL NOTES:

1. ALL WORK MUST COMPLY WITH THE CODES LISTED BELOW AND IN THE SPECIFICATIONS
2. THIS STRUCTURE HAS BEEN DESIGNED IN ACCORDANCE WITH THE PROVISIONS OF THE INTERNATIONAL BUILDING CODE, 2015 EDITION, AS ADOPTED BY THE NORTH CAROLINA STATE BUILDING CODE, 2018 EDITION, EFFECTIVE JANUARY, 2019.
3. VERIFY ALL DRAWINGS FOR COORDINATION BETWEEN TRADES, LOCATE SLOTS, SLEEVES AND TRENCHES AS REQUIRED FOR MECHANICAL TRADES. PROVIDE AND INSTALL ANCHORS, INSERTS, HANGERS, ETC. AS REQUIRED FOR VARIOUS TRADES.
4. SUBMIT SHOP DRAWINGS FOR APPROVAL BEFORE PROCEEDING WITH THE WORK. THE CONTRACTOR MUST CHECK ALL DIMENSIONS AND ACCEPT FULL RESPONSIBILITY FOR DIMENSIONAL CORRECTNESS.
5. UNDER NO CIRCUMSTANCES CAN THE REPRODUCTION OF CONTRACT DRAWINGS BE USED AS SHOP DRAWINGS.
6. LOADING APPLIED TO THE STRUCTURE DURING THE PROCESS OF CONSTRUCTION MUST NOT EXCEED THE SAFE LOAD-CARRYING CAPACITY OF THE STRUCTURAL MEMBERS. THE LIVE LOADINGS USED IN THE DESIGN OF THIS STRUCTURE ARE INDICATED IN THE “DESIGN CRITERIA NOTES”. DO NOT APPLY ANY CONSTRUCTION LOADS UNTIL ALL STRUCTURAL FRAMING IS PROPERLY CONNECTED TOGETHER AND UNTIL ALL TEMPORARY BRACING IS IN PLACE.
7. IN ACCORDANCE WITH GENERALLY ACCEPTED CONSTRUCTION PRACTICES, CONTRACTOR WILL BE SOLELY AND COMPLETELY RESPONSIBLE FOR CONDITION OF JOB SITE INCLUDING SAFETY OF ALL PERSONS AND PROPERTY DURING PERFORMANCE OF THE WORK.
8. THE DUTY OF THE ARCHITECT IN CONDUCTING CONSTRUCTION REVIEW OF CONTRACTOR'S PERFORMANCE IS NOT INTENDED TO INCLUDE REVIEW OF ADEQUACY OF CONTRACTOR'S SAFETY MEASURES IN, ON, OR NEAR THE CONSTRUCTION SITE.
9. TYPICAL DETAILS AND GENERAL NOTES APPLY TO ALL PARTS OF THE JOB EXCEPT WHERE SPECIFICALLY DETAILED OR NOTED OTHERWISE.
10. INFORM THE PROFESSIONAL OF RECORD IN WRITING OF ANY DEVIATION FROM THE CONTRACT DOCUMENTS. THE CONTRACTOR IS NOT RELIEVED OF THE RESPONSIBILITY OF SUCH DEVIATION BY THE PROFESSIONAL OF RECORD REVIEW OF SHOP DRAWINGS, PRODUCT DATA, ETC. UNLESS THE CONTRACTOR HAS SPECIFICALLY INFORMED THE PROFESSIONAL OF RECORD OF SUCH DEVIATION AT THE TIME OF SUBMISSION, AND THE PROFESSIONAL OF RECORD HAS GIVEN WRITTEN APPROVAL TO THE SPECIFIC DEVIATION.

FOUNDATION:

1. FOUNDATIONS FOR THIS STRUCTURE HAVE BEEN DESIGNED IN ACCORDANCE WITH THE RECOMMENDATIONS IN THE GEOTECHNICAL EXPLORATION REPORT, PREPARED BY HIGHLANDS ENVIRONMENTAL SOLUTION, INC. AND DATED FEBRUARY 6, 2025.
2. PERFORM ALL EARTHWORK IN ACCORDANCE WITH THE RECOMMENDATIONS IN THE GEOTECHNICAL ENGINEERING REPORT.
3. THE ENTIRE STRUCTURE SHALL BE FOUNDED ON VERY WELL COMPACTED STRUCTURAL FILL OR UNDISTURBED SOIL WITH A DESIGN BEARING PRESSURE OF 1500 P.S.F.
4. PRIOR TO PLACING FOUNDATION CONCRETE, ALL FOUNDATION EXCAVATIONS MUST BE INSPECTED BY THE GEOTECHNICAL ENGINEER TO VERIFY THE EXTENT OF ANY LOOSE, SOFT, OR UNSATISFACTORY SOIL AND TO VERIFY THE DESIGN BEARING PRESSURE. THE GEOTECHNICAL ENGINEER WILL PROVIDE DIRECTION FOR CORRECTIVE ACTION WHERE REQUIRED.
5. DO NOT INSTALL FOUNDATION WORK UNTIL IT HAS BEEN COORDINATED WITH ADJACENT UNDERGROUND UTILITIES. FOOTINGS MUST BE SLEEVED OR LOWERED WHERE REQUIRED. DO NOT INSTALL UTILITIES UNDER ISOLATED COLUMN FOOTINGS. INSTALL UTILITIES PERPENDICULAR TO WALL FOOTINGS.
6. DO NOT PUT IN UNBALANCED BACKFILL AGAINST FOUNDATION WALLS UNLESS WALLS ARE SECURELY BRACED AGAINST OVERTURNING.
7. FROST LINE DEPTH IS 24" BELOW GRADE. BOTTOM OF EXTERIOR FOUNDATIONS MUST BEAR A MINIMUM OF 24" BELOW FINAL GRADE. LOWER FOOTINGS AS REQUIRED TO MAINTAIN COVERAGE.

CAST IN PLACE CONCRETE:

1. CAST IN PLACE CONCRETE MUST COMPLY WITH THE AMERICAN CONCRETE INSTITUTE (ACI- 318-14), COMMENTARY, (ACI-318R-14), AND THE SPECIFICATIONS FOR STRUCTURAL CONCRETE (ACI 301).
2. DETAILING OF ALL CONCRETE STEEL REINFORCEMENT MUST BE IN ACCORDANCE WITH THE MANUAL OF STANDARD PRACTICE FOR DETAILING REINFORCED CONCRETE STRUCTURES (ACI-315).
3. ALL CONCRETE MUST BE NORMAL WEIGHT, UNLESS OTHERWISE NOTED, CONCRETE HAVING A MINIMUM COMPRESSIVE STRENGTH AT 28 DAYS AS FOLLOWS:
   A. SLAB ON GRADE 4,500 PSI
   B. FOOTINGS 3,000 PSI
   C. CONCRETE EXPOSED TO WEATHER MUST BE AIR ENTRAINED.
4. ALL REINFORCING MUST BE AS FOLLOWS:
   A. REINFORCING BARS - ASTM A-615, GRADE 60
   B. WELDED REINFORCING BARS - ASTM A706, GRADE 60
   C. EPOXY COATED REINFORCING BARS – ASTM A775
   WELDED WIRE FABRIC - ASTM A-1064 FLAT SHEET TYPE, ROLL TYPE NOT ACCEPTABLE.

CAST IN PLACE CONCRETE CONTINUED:

5. WELDED WIRE FABRIC MUST BE PROPERLY SUPPORTED PRIOR TO PLACING CONCRETE. HOOKING OF FABRIC IS NOT PERMITTED.
6. UNLESS OTHERWISE NOTED, REINFORCING STEEL MARKED CONTINUOUS (CONT.) MUST BE LAPPED PER THE REINFORCING LAP SCHEDULE.
7. HOLD ALL REINFORCING STEEL SECURELY IN PLACE TO PREVENT DISLOCATION DURING THE POURING OPERATION. SUPPORT SLAB REINFORCING BARS ON HIGH CHAIRS AND BAR SPACERS OF SUITABLE DESIGN, OR CONCRETE BLOCKS HAVING THE SAME MINIMUM COMPRESSIVE STRENGTH OF THE CONCRETE SLAB.
8. DO NOT PLACE CONCRETE UNTIL ALL EMBEDDED WORK HAS BEEN INSTALLED, TESTED AND INSPECTED.
9. EXCEPT AS OTHERWISE SHOWN MINIMUM PROTECTION (CONCRETE COVER) FOR REINFORCING STEEL MUST BE AS FOLLOWS:

   CONCRETE SURFACES CAST AGAINST SOIL: 3"
   CONCRETE SURFACES EXPOSED TO EARTH OR WEATHER:1-1/2" FOR #5 BARS AND SMALLER; 2" FOR #6 BARS AND LARGER
   INTERIOR CONCRETE SURFACES: 3/4" FOR SLABS; 1-1/2" FOR BEAMS & COLUMNS

POST-INSTALLED ANCHOR:

1. POST-INSTALLED ANCHORS MUST COMPLY WITH THE AMERICAN CONCRETE INSTITUTE (ACI- 318-11). SUBMIT CALCULATIONS DEMONSTRATING THAT THE PRODUCT IS CAPABLE OF ACHIEVING THE PERFORMANCE VALUES INDICATED IN THE DRAWINGS. PRODUCT MUST HAVE AN ICC ESR SHOWING COMPLIANCE WITH THE RELEVANT BUILDING CODE.
2. ANCHOR CAPACITY IS DEPENDENT ON SPACING BETWEEN ADJACENT ANCHORS AND EDGE DISTANCE. INSTALL ANCHORS IN ACCORDANCE WITH SPACING AND EDGE DISTANCES INDICATED IN THE DRAWINGS.
3. INSTALL ANCHORS PER THE MANUFACTURER INSTRUCTIONS, AS INCLUDED IN THE ANCHOR PACKAGING.
4. DRILL CORRECT HOLE SIZES FOR MECHANICAL ANCHORS WITH CARBIDE-TIPPED DRILL BITS MEETING THE DIAMETER REQUIREMENTS OF ANSI B212.15.
5. DRILL HOLES WITH A HAMMER DRILL UNLESS OTHERWISE NOTED.
6. DO NOT DISTURB OR APPLY LOAD TO ADHESIVE ANCHORS PRIOR TO FULL CURE OF THE ADHESIVE.
7. ADHESIVE ANCHOR SUBJECT TO SUSTAINED TENSION LOADS MUST BE INSTALLED BY A PERSON CERTIFIED BY AN APPLICABLE CERTIFICATION PROGRAM. CERTIFICATION MUST INCLUDE WRITTEN AND PERFORMANCE TESTS IN ACCORDANCE WITH ACI/CRSI ADHESIVE ANCHOR INSTALLER CERTIFICATION PROGRAM. SUBMIT INSTALLER CERTIFICATION PRIOR TO INSTALLATION.

ROUGH CARPENTRY:

1. ROUGH CARPENTRY MUST COMPLY WITH THE NATIONAL FOREST PRODUCTS ASSOCIATION (NFPA) “NATIONAL DESIGN SPECIFICATION FOR WOOD CONSTRUCTION”.
2. UNLESS OTHERWISE NOTED, ALL NAILING MUST BE IN ACCORDANCE WITH THE “FASTENING SCHEDULE” SHOWN IN TABLE 2304.10.1 OF THE INTERNATIONAL BUILDING CODE.
3. ALL WOOD FRAMING MUST MEET THE REQUIREMENTS OF PS 20 “AMERICAN SOFTWOOD LUMBER STANDARD” AND THE FOLLOWING MINIMUM REQUIREMENTS:
   A. MOISTURE CONTENT - SEASONED, WITH 19% MAXIMUM MOISTURE CONTENT
   B. GRADE – NO.1
   C. SPECIES – SOUTHERN PINE GRADED UNDER SPIB RULES
4. CONSTRUCTION PANELS MUST COMPLY WITH PS1 “U.S. PRODUCT STANDARD FOR CONSTRUCTION AND INDUSTRIAL PLYWOOD” FOR PLYWOOD CONSTRUCTION PANELS AND THE FOLLOWING:
   A. ROOF SHEATHING – ¾" APA RATED SHEATHING, EXTERIOR EXPOSURE DURABILITY CLASSIFICATION.
5. STAGGER ALL END JOINTS FOR SHEATHING 4'-0". ALL ROOF SHEATHING MUST BE PLACED PERPENDICULAR TO THE DIRECTION OF THE SUPPORTING MEMBER. ALL END JOINTS MUST BE MADE ON SUPPORTING MEMBERS.
6. ALL SHEATHING MUST BE NAILED AS FOLLOWS:
   A. ROOF SHEATHING - 10d NAILS @ 6" O/C EDGE NAILING AND 12" O/C FIELD NAILING
7. STORE LUMBER AND PLYWOOD ON LEVEL RACKS AND KEEP FREE OF GROUND TO AVOID WARPING. STACK TO INSURE PROPER VENTILATION AND DRAINAGE.
8. PRESSURE TREAT ALL WOOD MEMBERS PERMANENTLY EXPOSED TO WEATHER, SILL PLATES AROUND THE BUILDING PERIMETER, OR ANY WOOD IN CONTACT WITH CONCRETE OR MASONRY IN ACCORDANCE WITH THE SPECIFICATIONS.
9. PROVIDE JOIST BRIDGING, BRACING, ETC. AS REQUIRED BY THE SPECIFICATIONS. IN ADDITION, CROSS BRIDGING OR FULL DEPTH BLOCKING IS REQUIRED AT ROOF RAFTERS NOT RECEIVING CEILING SHEATHING AND AT WALL STUDS NOT RECEIVING SHEATHING ON BOTH FACES. UNLESS OTHERWISE NOTED, CROSS BRIDGING MUST BE SIMPSON TBC (OR EQUIVALENT). MAXIMUM BRIDGING/BLOCKING SPACING MUST BE AT 8'-0" O.C. OR AT 1/3 POINTS OF MEMBER SPAN WHICHEVER IS LESS. COORDINATE EXTENTS OF WALL AND CEILING SHEATHING WITH ARCHITECTURAL DRAWINGS.
10. COORDINATE JOIST LOCATIONS WITH PLUMBING, MECHANICAL AND ARCHITECTURAL REQUIREMENTS PRIOR TO INSTALLATION.
11. PROVIDE METAL FRAMING CONNECTORS OF SIZE TO FIT MEMBERS AND OF SUFFICIENT STRENGTH TO DEVELOP THE FULL STRENGTH OF THE SUPPORTED MEMBER, COMPLETE WITH SPECIAL NAILS AS REQUIRED.

ROUGH CARPENTRY CONTINUED:

12. AT A MINIMUM, PROVIDE GALVANIZED METAL FRAMING CONNECTORS IN ACCORDANCE WITH ASTM A653, GRADE A (STRUCTURAL QUALITY). GALVANIZE METAL FRAMING CONNECTORS IN CONTACT WITH PRESSURE TREATED WOOD IN ACCORDANCE WITH ASTM A 653 WITH A G185 COATING.
13. STEEL PLATE CONNECTORS MUST COMPLY WITH ASTM A36 SPECIFICATIONS. BOLTS CONNECTING TO WOOD MEMBERS MUST COMPLY WITH ASTM A307 AND MUST BE ¾" DIAMETER UNLESS OTHERWISE NOTED.
14. METAL FASTENERS (NAILS, BOLTS, SCREWS, ETC.) IN CONTACT WITH PRESSURE TREATED WOOD MUST BE GALVANIZED PER ASTM A-153 WITH G185 COATING.
15. WHERE MULTIPLE FRAMING MEMBERS ARE INDICATED, SCAB CONTINGENT MEMBERS TOGETHER WITH 16d NAILS AT 12" ON CENTER, ALTERNATING AT 2 INCHES FROM EACH EDGE, UNLESS OTHERWISE NOTED.

CONCRETE MASONRY:

1. MASONRY CONSTRUCTION MUST COMPLY WITH THE MASONRY SOCIETY “BUILDING CODE FOR MASONRY STRUCTURES” (TMS 402-2016) AND “SPECIFICATION FOR MASONRY STRUCTURES” (TMS 602-2016).
2. CONCRETE MASONRY UNITS MUST CONFORM TO ASTM C90 AND BE MADE WITH LIGHTWEIGHT AGGREGATE. THE COMPRESSIVE STRENGTH OF MASONRY, F'm, EXPRESSED AS FORCE PER UNIT OF NET CROSS-SECTIONAL AREA, MUST BE 2,000 PSI AT 28 DAYS.
3. MORTAR MUST CONFORM TO ASTM C270, TYPE S. AGGREGATE FOR MORTAR MUST COMPLY WITH ASTM C144.
4. GROUT MUST CONFORM TO ASTM C476 AND MUST HAVE A MINIMUM 28 DAY COMPRESSIVE STRENGTH OF 2,500 PSI. SLUMP AT POINT OF PLACEMENT MUST BE BETWEEN 8 AND 11 INCHES.
5. ALL REINFORCING BARS MUST CONFORM TO ASTM A615, GRADE 60. SHOP FABRICATED BARS SHOWN TO BE BENT OR HOOKED. BARS MUST BE LAPPED AS FOLLOWS: #4-20", #5-30", #6-54", #7-63", #8-72", #9-81".
6. REBAR DOWELS MUST BE THE SAME SIZE AND SPACING AS VERTICAL REINFORCING FROM FOUNDATION. DOWELS MUST HAVE STANDARD ACI HOOKS.
7. PROVIDE BAR POSITIONERS FOR VERTICAL REINFORCING AT A MAXIMUM SPACING OF 200 BAR DIAMETERS, AT GROUT LIFT HEIGHTS, OR BAR SPLICE LOCATIONS, WHICHEVER IS LESS.
8. GROUTING MUST BE STOPPED 1-1/2" BELOW THE TOP OF A COURSE SO AS TO FORM A KEY AT THE POUR JOINT.
9. ALL BOLTS, ANCHORS, ETC. PLACED IN THE WALL, MUST BE GROUTED SOLID INTO POSITION.
10. GROUT ALL CELLS SOLID BELOW FINISHED FIRST FLOOR.
11. HORIZONTAL JOINT REINFORCING MUST BE STANDARD 9 GAGE LADDER TYPE IN CMU WALLS AT 16" ON-CENTER. JOINT REINFORCING MUST COMPLY WITH ASTM A951.
12. DISCONTINUE ALL HORIZONTAL REINFORCING AT CONTROL JOINTS EXCEPT FOR BOND BEAMS AT JOIST BEARING ELEVATIONS. HORIZONTAL BOND BEAMS MUST HAVE CONTINUOUS REINFORCING AS SHOWN IN THE SECTIONS AND DETAILS.

OPEN WEB STEEL JOIST:

1. OPEN-WEB STEEL JOIST MUST COMPLY WITH THE STANDARD SPECIFICATION FOR OPEN WEB JOISTS OF THE STEEL JOIST INSTITUTE (SJI), LATEST EDITION.
2. OPEN-WEB STEEL JOIST MUST HAVE A MINIMUM BEARING LENGTH AS FOLLOWS:
   A. ON STEEL - 'K' SERIES = 2 ½”
   B. ON MASONRY – AS DETAILED
3. WELD ALL STEEL JOISTS WHEREVER THEY BEAR ON STRUCTURAL STEEL MEMBERS, IN ACCORDANCE WITH THE S.J.I AND THE A.I.S.C SPECIFICATIONS
4. PREPARE AND SUBMIT SHOP DRAWINGS INDICATING THE JOIST LAYOUT, SPECIAL CONNECTIONS, AND ACCESSORIES. INCLUDE MARK, NUMBER, TYPE, LOCATION, AND SPACING OF JOISTS AND BRIDGING.
5. THE JOIST MANUFACTURER IS RESPONSIBLE FOR CONTINUOUS JOIST BRIDGING LINES SATISFYING THE REQUIREMENTS OF THE SJI SPECIFICATION FOR THE TOP AND BOTTOM CHORDS OF ALL STEEL JOISTS, AS WELL AS ANY ADDITIONAL BRIDGING / BRACING SHOWN ON THE DRAWINGS OR REQUIRED FOR JOISTS SUBJECTED TO NET UPLIFT OF OTHER SPECIAL LOADS. PROVIDE JOIST BRIDGING REQUIRED AT CHANGES OF JOIST DEPTHS AND AT ENDS OF ALL BRIDGING LINES UNLESS SUCH ENDS ARE PROPERLY ANCHORED INTO THE INTERSECTING INTERIOR OR END WALLS.
6. ROOF JOISTS MUST BE DESIGNED FOR A NET UPLIFT OF 15 PSF. A SINGLE LINE OF BOTTOM CHORD BRIDGING MUST BE PROVIDED NEAR THE FIRST BOTTOM CHORD PANEL POINTS WHENEVER UPLIFT LOADS OCCUR.
7. INSTALL JOIST BRIDGING AND CONNECTIONS COMPLETELY PRIOR TO PLACING ANY CONSTRUCTION LOADS ON THE JOISTS. CONSTRUCTION LOADING MUST NOT EXCEED THE JOIST DESIGN LOAD.
8. REINFORCE CONCENTRATED LOADS EXCEEDING 100 POUNDS AND NOT LOCATED AT JOIST PANEL POINTS PER THE TYPICAL DETAIL.

STEEL DECK:

1. STEEL DECK MUST CONFORM TO THE LATEST EDITION OF THE AMERICAN IRON AND STEEL INSTITUTE (AISI), “SPECIFICATION FOR THE DESIGN OF COLD-FORMED STEEL STRUCTURAL STEEL MEMBERS” AND THE STEEL DECK INSTITUTE (SDI) “DESIGN MANUAL FOR ROOF DECKS”.
2. ATTACH ROOF DECK TO SUPPORTS WITH 3/4" DIAMETER ARC SPOT WELDS IN ALL RIBS WHERE SIDELAPS OCCUR AND AT 6 INCHES ON CENTER ALONG SUPPORTS. FASTEN ADJACENT DECK UNITS ALONG SIDELAPS WITH WELDS AT 1/5 POINTS BETWEEN SUPPORTS. FASTEN EDGEMOST DECK PANEL TO SUPPORTS WITH 5/8" DIAMETER ARC SPOT WELDS AT SAME SPACING AS SIDELAP FASTENERS.
3. AS AN ALTERNATIVE TO ARC SPOT WELDS, MECHANICAL FASTENERS MAY BE USED. INSTALL POWDER-ACTUATED FASTENERS OR SCREW FASTENERS IN ACCORDANCE WITH THE MANUFACTURER'S RECOMMENDATIONS. PROVIDE EQUIVALENT LOAD VALUES SHOWING THE MECHANICAL FASTENERS MEET OR EXCEED THE PROVIDED LOAD CRITERIA. FASTENERS MUST BE SDI LISTED FOR DIAPHRAGM DESIGN AND WIND UPLIFT. FASTENERS MUST BE RECOGNIZED BY ICC-ES FOR DIAPHRAGM SHEAR STRENGTH IN ACCORDANCE WITH THE LATEST VERSION OF ICC-ES AC43.
4. SPAN DECK PERPENDICULAR TO SUPPORTS, CONTINUOUS OVER A MINIMUM OF THREE SPANS. PROVIDE FULL SHEETS ON EDGES OF DIAPHRAGMS.
5. WELDING MUST BE IN ACCORDANCE WITH AWS D1.3, “STRUCTURAL WELDING CODE - SHEET STEEL”. FIELD WELDS MUST BE WIRE BRUSHED AND PAINTED WITH RICH ZINC PAINT.
6. PROVIDE SUPPORTS ON ALL SIDES OF DECK OPENINGS MEASURING GREATER THAN 12" ON ANY SIDE OF OPENING. SPAN SUPPORTS BETWEEN ADJACENT BEAMS OR JOISTS ON TWO SIDES. UNLESS OTHERWISE NOTED USE L4X4X1/4. COORDINATE OPENING SIZES, LOCATIONS, AND DETAILS WITH ARCHITECTURAL, MECHANICAL, PLUMBING, AND ELECTRICAL DRAWINGS.
7. DO NOT HANG OR SUPPORT ANY PERMANENT LOADS FROM METAL ROOF DECK.
8. DURING STEEL DECK ERECTION DISTRIBUTE CONSTRUCTION LOADS TO PREVENT DAMAGE TO DECK. CONCENTRATED CONSTRUCTION LOADS OF 150 POUNDS OR LESS DISTRIBUTED OVER A 1'-0" WIDE SECTION OF DECK MUST NOT REQUIRE ANY FURTHER DISTRIBUTION. USE WORKING PLATFORMS FOR CONCENTRATED LOADS OF OVER 150 POUNDS, SUCH THAT THE RESULTING UNIFORM CONSTRUCTION LOAD ON THE DECK DOES NOT EXCEED 50 PSF.

WALKER the GROUP ARCHITECTURE incorporated
PO BOX 541, NEW BERN, NC 28563
252-636-8778

NORTH CAROLINA PROFESSIONAL ENGINEER SEAL 022830 07/28/2025 KEVIN M. ROOMSBURG

NRW ENGINEERING
Structural Consultants
748 Lord Dunmore Drive, Suite 101
Virginia Beach, VA 23464
Phone 757-474-0612
Fax 757-474-0919
NC license C-1393

CRAVEN COMMUNITY COLLEGE-PUBLIC SAFETY TRAINING CENTER

Executive Pkwy
New Bern, NC 28562

BID DOCUMENTS

SCO # 24-27879-01A

No.	Date	Revisions

Project Number: 2407.SAFE
Date: 07/28/2025
Drawn: DFS
Checked: KMR
Scale: AS NOTED
Drawing Title: GENERAL NOTES

Sheet Number: 115 Of 155
Drawing Number: S001

GENERAL NOTES:

UNISTRUT:

1. FRAMING SHALL BE A STRUT TYPE METAL FRAMING SYSTEM (STRUT SYSTEM) MANUFACTURED BY ATKORE UNISTRUT OR APPROVED EQUAL.

2. STRUT SYSTEM AND COMPONENTS MUST BE SUPPLIED FROM A SINGLE APPROVED MANUFACTURER.

3. THE MANUFACTURER SHALL HAVE AT LEAST 10 YEARS EXPERIENCE IN MANUFACTURING STRUT SYSTEMS.

4. THE MANUFACTURER MUST CERTIFY IN WRITING ALL COMPONENTS SUPPLIED HAVE BEEN PRODUCED IN ACCORDANCE WITH AN ESTABLISHED QUALITY ASSURANCE PROGRAM.

5. WORK SHALL MEET THE REQUIREMENTS OF THE FOLLOWING STANDARDS:

   A. FEDERAL, STATE AND LOCAL CODES
   B. NORTH AMERICAN SPECIFICATION FOR THE DESIGN OF COLD-FORMED STEEL STRUCTURAL MEMBERS, 2016.
   C. AMERICAN SOCIETY FOR TESTING AND MATERIALS (ASTM)
   D. METAL FRAMING MANUFACTURER'S ASSOCIATION (MFMA)

6. SUBMIT THE FOLLOWING:

   A. ASSEMBLY DRAWINGS NECESSARY TO INSTALL THE STRUT SYSTEM IN COMPLIANCE WITH THE CONTRACT DRAWINGS
   B. UNISTRUT CONNECTION DRAWINGS OR CUT SHEETS
   C. PERTINENT MANUFACTURERS PUBLISHED DATA

7. ALL MATERIAL IS TO BE DELIVERED TO THE WORK SITE IN ORIGINAL FACTORY PACKAGING TO AVOID DAMAGE TO THE FINISH.

8. UPON DELIVERY TO THE WORK SITE, ALL COMPONENTS SHALL BE PROTECTED FROM THE ELEMENTS BY A SHELTER OR OTHER COVERING.

9. MANUFACTURER SHALL WARRANT FOR 1 YEAR FROM THE SHIPMENT DATE THAT PRODUCTS WILL BE FREE FROM DEFECTS IN MATERIAL OR MANUFACTURE. IN THE EVENT OF ANY SUCH DEFECT IN VIOLATION OF THE WARRANTY, MANUFACTURER SHALL HAVE THE OPTION TO REPAIR OR REPLACE ANY SUCH DEFECTIVE PRODUCT.

10. INSTALLER SHALL WARRANT FOR 1 YEAR FROM THE DATE OF COMPLETION OF WORK THAT THE WORK WILL BE FREE OF DEFECTS IN INSTALLATION. IN THE EVENT OF ANY SUCH DEFECT IN VIOLATION OF THE WARRANTY, INSTALLER SHALL HAVE THE OPTION TO REPAIR OR REPLACE ANY SUCH DEFECTIVE PRODUCT.

11. ALL CHANNEL MEMBERS SHALL BE FABRICATED CONFORMING TO ONE OF THE FOLLOWING ASTM SPECIFICATIONS:

    A. ASTM A1011 SS GR 33, PLAIN FINISH
    B. ASTM A1011 SS GR 33, PERMA-GREEN (GR) E-COAT FINISH

12. ALL FITTINGS SHALL BE FABRICATED CONFORMING TO ONE OF THE FOLLOWING ASTM SPECIFICATIONS:

    A. CARBON STEEL: ALL CARBON STEEL FITTINGS SHALL BE FABRICATED FROM STEEL THAT MEETS/EXCEEDS THE PHYSICAL REQUIREMENTS OF ASTM A1011 SS GRADE 33 AND CONFORMS TO ONE OF THE FOLLOWING ASTM SPECIFICATIONS:

       1. A 575
       2. A576
       3. A 36
       4. A 635
       5. A 1059
       6. A 1046

13. ANY SUBSTITUTIONS OF PRODUCT OR MANUFACTURER MUST BE APPROVED IN WRITING TEN DAYS PRIOR TO BID DATE BY THE PROFESSIONAL OF RECORD.

14. THE INSTALLER SHALL INSPECT THE WORK AREA PRIOR TO INSTALLATION. IF WORK AREA CONDITIONS ARE UNSATISFACTORY, INSTALLATION SHALL NOT PROCEED UNTIL SATISFACTORY CORRECTIONS ARE COMPLETED.

15. INSTALLATION SHALL BE ACCOMPLISHED BY A FULLY TRAINED MANUFACTURER AUTHORIZED INSTALLER.

16. SET STRUT SYSTEM COMPONENTS INTO FINAL POSITION TRUE TO LINE, LEVEL AND PLUMB, IN ACCORDANCE WITH APPROVED DRAWINGS.

17. ANCHOR MATERIAL FIRMLY IN PLACE, AND TIGHTEN ALL CONNECTIONS TO THEIR RECOMMENDED TORQUES.

18. SET SCREWS INSTALLATION TORQUE: 125 IN-LBS (FROM ATKORE UNISTRUT)

19. UPON COMPLETION OF THIS SECTION OF WORK, REMOVE ALL PROTECTIVE WRAPS AND DEBRIS. REPAIR ANY DAMAGE DUE TO INSTALLATION OF THIS SECTION OF WORK.

20. DURING INSTALLATION, IT SHALL BE THE RESPONSIBILITY OF THE INSTALLER TO PROTECT THIS WORK FROM DAMAGE.

21. UPON COMPLETION OF THIS SCOPE OF WORK, IT SHALL BECOME THE RESPONSIBILITY OF THE GENERAL CONTRACTOR TO PROTECT THIS WORK FROM DAMAGE

STRUCTURAL DELEGATED DESIGNS AND DEFERRED SUBMITTALS:

1. STRUCTURAL DELEGATED DESIGNS AND SUBSEQUENT DEFERRED SUBMITTALS ARE FOR ELEMENTS, PARTS, OR PORTIONS OF THE OVERALL STRUCTURAL SYSTEM THAT ARE INDICATED OR REFERRED TO ON THESE DRAWINGS AND THAT ARE CRITICAL TO THE PERFORMANCE OF THE OVERALL STRUCTURAL SYSTEMS. DESIGN CRITERIA HAS BEEN PROVIDED FOR THESES ITEMS IN THE STRUCTURAL NOTES, PLANS, AND DETAILS.

2. STRUCTURAL DEFERRED SUBMITTALS ARE COMPLETE PACKAGES TO BE SUBMITTED FOR REVIEW THAT INCLUDE DRAWINGS AND CALCULATIONS FOR ALL DELEGATED DESIGN ITEMS AND THEIR CONNECTIONS. DEFERRED SUBMITTALS SHALL BEAR THE STAMP AND SIGNATURE OF THE DESIGN PROFESSIONAL, REGISTERED IN THE STATE OF NORTH CAROLINA, RESPONSIBLE FOR THEIR DESIGN.

3. THE STRUCTURAL ENGINEER OF RECORD WILL REVIEW STRUCTURAL DEFERRED SUBMITTALS TO VERIFY DESIGN CRITERIA IS COMPLIANT WITH THE APPROVED CONSTRUCTIONS DOCUMENTS.

4. DESIGN RESPONSIBILITY FOR THE FOLLOWING ENGINEERED SYSTEMS AND COMPONENT PARTS IS DELEGATED TO A QUALIFIED DELEGATED REGISTERED PROFESSIONAL ENGINEER SELECTED BY THE CONTRACTOR. STRUCTURAL DELEGATED DESIGN ITEMS REQUIRING DEFERRED SUBMITTALS INCLUDE, BUT ARE NOT LIMITED TO:

   A. OPEN WEB STEEL JOISTS, BRIDGING, BRACING, CONNECTIONS, AND RELATED COMPONENTS.
   B. SPORTS LIGHT POLE FOUNDATIONS

5. REFER TO S001 AND S002 FOR APPLICABLE DESIGN STANDARDS AND CRITERIA, DESIGN LOADS AND SERVICEABILITY LIMITS.

6. INCLUDE SIGNED SEALS FOR WORK DESIGNED BY THE DELEGATED ENGINEER. DO NOT START FABRICATION OF THE DELEGATED SYSTEM OR COMPONENT PART OR FIELD CONSTRUCTION THAT MAY BE AFFECTED BY THE SYSTEM OR COMPONENT PART WITHOUT SUBMITTAL REVIEW BY THE STRUCTURAL ENGINEER OF RECORD.

NON-STRUCTURAL DELEGATED DESIGNS AND DEFERRED SUBMITTALS:

1. NON-STRUCTURAL DELEGATED DESIGNS AND SUBSEQUENT DEFERRED SUBMITTALS ARE FOR ITEMS NOT INCLUDED IN THE STRUCTURAL DELEGATED DESIGN SECTION. THESE ARE ITEMS THAT ARE NOT CRITICAL TO THE OVERALL PERFORMANCE OF THE STRUCTURAL SYSTEM BUT THAT IMPART LOADS AND FORCES TO THE STRUCTURAL SYSTEMS.

2. NON-STRUCTURAL DEFERRED SUBMITTALS SHALL BEAR THE STAMP AND SIGNATURE OF THE DESIGN PROFESSIONAL, REGISTERED IN THE STATE OF NORTH CAROLINA, RESPONSIBLE FOR THE DESIGN.

3. THE STRUCTURAL ENGINEER OF RECORD WILL REVIEW NON-STRUCTURAL DEFERRED SUBMITTALS TO VERIFY DESIGN CRITERIA IS COMPLIANT WITH THE APPROVED CONSTRUCTIONS DOCUMENTS.

4. IF THE STRUCTURAL DRAWINGS INCLUDE LOADS TO ACCOMMODATE NON-STRUCTURAL ELEMENTS, THE CONTRACTOR MUST SUBMIT DOCUMENTATION INDICATING THAT THE NON-STRUCTURAL ELEMENTS COMPLY WITH THE LOADING CRITERIA PROVIDED HEREIN. SUCH DOCUMENTATION SHALL BEAR THE STAMP AND SIGNATURE OF THE DESIGN PROFESSIONAL RESPONSIBLE FOR THE DESIGN.

5. WHEN THE NON-STRUCTURAL DEFERRED SUBMITTAL INDICATES THAT THE ELEMENT WILL IMPART FORCES IN EXCESS OF LOADS THAT ARE INDICATED ON THE STRUCTURAL DRAWINGS, THE CONTRACTOR MUST SUBMIT A DETAILED GRAPHICAL REPRESENTATION OF THOSE DESIGN LOADS, INCLUDING MAGNITUDE, AND LOCATION. THE GRAPHIC MUST BE ACCOMPANIED BY DOCUMENTATION INDICATING THAT THE NON-STRUCTURAL ELEMENT DESIGN COMPLIES WITH THE LOADING CRITERIA PROVIDED HEREIN. THE LETTER MUST BEAR THE STAMP AND SIGNATURE OF THE DESIGN PROFESSIONAL RESPONSIBLE FOR THE DESIGN.

6. NON-STRUCTURAL DELEGATED DESIGN ITEMS REQUIRING DEFERRED SUBMITTALS SHALL INCLUDE BUT ARE NOT LIMITED TO:

   A. COLD FORMED STEEL STUDS/JOISTS/HEADER/JAMBS/TRUSSES
   B. METAL STAIRS AND RAILS
   C. UNISTRUT CHANNELS AND ASSOCIATED COMPONENTS

DESIGN CRITERIA NOTES:

1. LOADS USED IN THE DESIGN OF THIS STRUCTURE ARE AS FOLLOWS:

2. UNIFORM LIVE LOADS:

   A. SLAB ON GRADE 100 PSF
   B. HANDRAILS 50 PLF
   C. ROOF 20 PSF

3. CONCENTRATED LIVE LOADS:

   A. HANDRAIL: 200# CONCENTRATED LOAD*
      *CONCENTRATED LIVE LOAD NOT CONCURRENT WITH UNIFORM LIVE LOAD

4. ROOF SNOW LOADS:
   GROUND SNOW LOAD Pg = 10 PSF
   SNOW EXPOSURE FACTOR Ce = 1.0
   SNOW LOAD IMPORTANCE FACTOR I =1.0
   THERMAL FACTOR Ct=1.0
   FLAT ROOF SNOW LOAD: Pf = 7 PSF
   RAIN ON SNOW SURCHARGE LOAD= 12 PSF

4. WIND LOADS:
   RISK CATEGORY = II
   ULTIMATE WIND SPEED = 132 MPH
   NOMINAL WIND SPEED (ASD) = 102.2MPH
   EXPOSURE CATEGORY (MAIN WINDFORCE-RESISTING SYSTEM): C
   EXPOSURE CATEGORY (COMPONENTS AND CLADDING): C
   INTERNAL PRESSURE COEFFICIENT: +/- 0.18 (ENCLOSED)

   COMPONENTS AND CLADDING: WIND PRESSURE TO BE USED FOR DESIGN OF EXTERIOR COMPONENTS AND CLADDING MATERIALS NOT SPECIFICALLY DESIGNED ON THESE DRAWINGS MUST BE PER TABLE BELOW:

COMPONENTS AND CLADDING WIND PRESSURES										
AREA (SF)	ROOF ZONES						WALL ZONES			
	1		2		3		4		5	
A<10	+19.2	-47.2	+19.2	-79.1	+19.2	-119.1	+43.2	-46.8	+43.2	-57.5
A≥100	+16.0	-43.2	+16.0	-51.2	+16.0	-51.2	+36.8	-40.4	+36.8	-44.8

INTERPOLATE BETWEEN AREAS INDICATED.
CORNER ZONES EQUAL 3.5 FEET.

REFER TO SKETCH BELOW FOR ZONE DEFINITIONS.

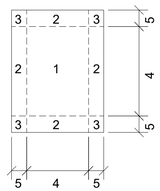

ZONES

5. SEISMIC LOADS:
   RISK CATEGORY II
   IMPORTANCE FACTOR Ie = 1.00
   Ss = 12.9%g
   S1 = 6.4%g
   SOIL SITE CLASS D (ASSUMED)
   Sds = 0.138
   Sd1 = 0.102
   SEISMIC DESIGN CATEGORY B

STRUCTURAL ABBREVIATIONS LIST

AB	ANCHOR BOLT
ALT	ALTERNATE
ARCH	ARCHITECT, ARCHITECTURAL
BLDG	BUILDING
BOTT	BOTTOM
BRDG	BRIDGING
BRG	BEARING
CMU	CONCRETE MASONRY UNIT
CJ	CONTROL JOINT
CLR	CLEAR
COL	COLUMN
CONC	CONCRETE
COND	CONDITION
CONN	CONNECTION
CONST	CONSTRUCTION
CONT	CONTINUOUS
DIA	DIAMETER
DIAG	DIAGONAL
DWG	DRAWING
DWGS	DRAWINGS
ELEC	ELECTRICAL
ELEV	ELEVATION
EXIST	EXISTING
EXP	EXPANSION
FOUND	FOUNDATION
FNDN	FOUNDATION
FOB	FACE OF BRICK
FTG	FOOTING
GALV	GALVANIZED
GC	GENERAL CONTRACTOR
HORIZ	HORIZONTAL
HS	HIGH STRENGTH
HT	HEIGHT
INSUL	INSULATION
ISO	ISOLATION
L	ANGLE
LLH	LONG LEG HORIZONTAL
LLV	LONG LEG VERTICAL
MANUF	MANUFACTURED/MANUFACTURER
MAS	MASONRY
MAX	MAXIMUM
MECH	MECHANICAL
MIN	MINIMUM
OPG	OPENING
OPP	OPPOSITE
PJF	PREMOLDED JOINT FILLER
PL	PLATE
PSI	POUNDS PER SQUARE INCH
PSF	POUNDS PER SQUARE FOOT
REF	REFERENCE
REINF	REINFORCE,REINFORCING
REQ'D	REQUIRED
SCHED	SCHEDULE
SECT	SECTION
SJ	SAWED JOINT
SPECS	SPECIFICATIONS
STD	STANDARD
TYP	TYPICAL
UON	UNLESS OTHERWISE NOTED
VERT	VERTICAL
WWF	WELDED WIRE FABRIC
W/	WITH
W/O	WITHOUT
CL	CENTERLINE
OC	ON CENTER
Ø	DIAMETER
°	DEGREES
±	PLUS OR MINUS

WALKER the GROUP ARCHITECTURE incorporated
PO BOX 541, NEW BERN, NC 28563
252-636-8778

NORTH CAROLINA PROFESSIONAL 022830 07/28/2025 ENGINEER KEVIN M. ROONSBURG

NRW ENGINEERING
Structural Consultants
748 Lord Dunmore Drive, Suite 101
Virginia Beach, VA 23464
Phone 757-474-0612
Fax 757-474-0919
NC license C-1393

CRAVEN COMMUNITY COLLEGE-PUBLIC SAFETY TRAINING CENTER

Executive Pkwy
New Bern, NC 28562

BID DOCUMENTS

SCO # 24-27879-01A

Revisions

No.	Date

Project Number: 2407.SAFE
Date: 07/28/2025
Drawn: DFS
Checked: KMR
Scale: AS NOTED
Drawing Title: GENERAL NOTES AND ABBREVIATIONS

Sheet Number: 116 Of 155
Drawing Number: S002

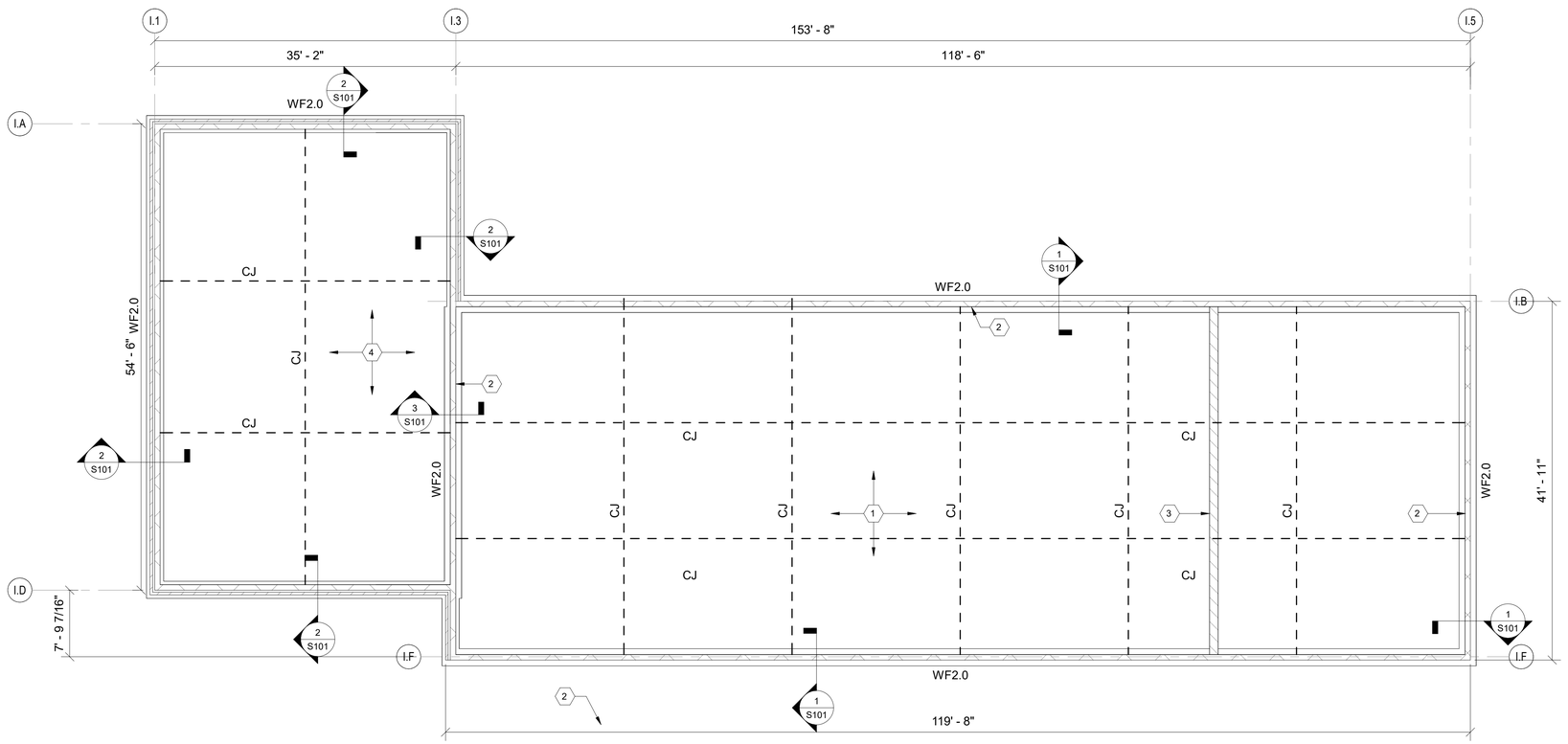

INDOOR RANGE FOUNDATION PLAN

SCALE: 1/8" = 1'-0"

PLAN NORTH

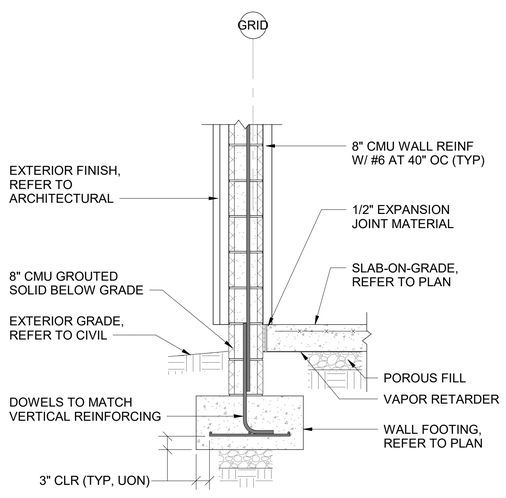

1 SECTION

SCALE: 3/4" = 1'-0" (S101)

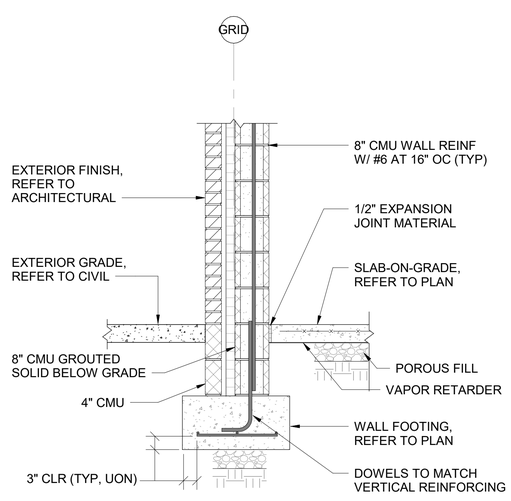

2 SECTION

SCALE: 3/4" = 1'-0" (S101)

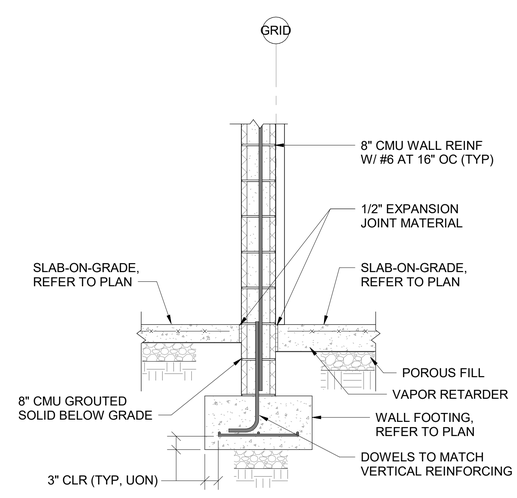

3 SECTION

SCALE: 3/4" = 1'-0" (S101)

GENERAL SHEET NOTES

1. DATUM FOR ALL ELEVATIONS GIVEN ON THIS PLAN IS FINISHED FIRST FLOOR ELEVATION = 0'-0". REFER TO CIVIL DRAWINGS FOR ACTUAL ELEVATION.
2. TOP OF CONCRETE SLAB IS AT 0'-0" UNLESS OTHERWISE INDICATED THUS [+____] ON PLAN.
3. WALL FOOTINGS NOTED THUS WFX.X. REFER TO WALL FOOTING SCHEDULE ON S501 FOR SIZE AND REINFORCING.
4. UNLESS NOTED THUS (-___), TOP OF ALL WALL FOOTINGS SHALL BE AT -1'-4" BELOW DATUM.
5. THE SYMBOL CJ INDICATES SLAB CONTROL JOINT, AND MAY BE CONSTRUCTION JOINT OR SAWED JOINT. REFER TO TYPICAL SLAB CONTROL JOINT DETAILS ON SHEET S-501.
6. NO FOUNDATION WORK SHALL BE INSTALLED UNTIL ALL UNDERGROUND UTILITIES, ETC. HAVE BEEN COORDINATED WITH FOUNDATION LOCATIONS AND ELEVATIONS.
7. FOR TYPICAL DETAILS AND GENERAL NOTES, REFER TO SHEETS S501 AND S502 .

NEW WORK KEYNOTES

1. PROVIDE 6" CONCRETE SLAB-ON-GRADE OVER 15 MIL VAPOR RETARDER ON 4" POROUS FILL MATERIAL. REINFORCE SLAB WITH 6x6 - W2.9xW2.9 WELDED WIRE FABRIC PLACED 1 1/2" FROM TOP OF SLAB.
2. GROUT ALL MASONRY WALL CELLS SOLID FULL HEIGHT OF WALL WITH 4000 PSI CONCRETE FULL HEIGHT IN SHOOTING RANGE AREA.
3. 12" WIDE x 4" DEEP TRENCH, SEE TYPICAL DETAIL ON SHEET S501
4. PROVIDE 4" CONCRETE SLAB-ON-GRADE OVER 15 MIL VAPOR RETARDER ON 4" POROUS FILL MATERIAL. REINFORCE SLAB WITH 6x6 - W2.9xW2.9 WELDED WIRE FABRIC PLACED 1 1/2" FROM TOP OF SLAB.

GRAPHIC SCALE(S)

SCALE: 1/8"=1'-0" 0 4' 8' 16'

SCALE: 3/4"=1'-0" 0 1' 2' 3'

WALKER the GROUP ARCHITECTURE incorporated
PO BOX 541, NEW BERN, NC 28563
252-636-8778

NORTH CAROLINA PROFESSIONAL ENGINEER SEAL 022830 07/28/2025 KEVIN M. ROONSBURG

NRW ENGINEERING
Structural Consultants
748 Lord Dunmore Drive, Suite 101
Virginia Beach, VA 23464
Phone 757-474-0612
Fax 757-474-0919
NC license C-1393

CRAVEN COMMUNITY COLLEGE-PUBLIC SAFETY TRAINING CENTER

Executive Pkwy
New Bern, NC 28562

BID DOCUMENTS

SCO # 24-27879-01A

Revisions

No.	Date

Project Number 2407.SAFE	Date 07/28/2025
Drawn DFS	Checked KMR
Scale AS NOTED	

Drawing Title
INDOOR RANGE FOUNDATION PLAN AND SECTIONS

Sheet Number
117 Of 155

Drawing Number
S101

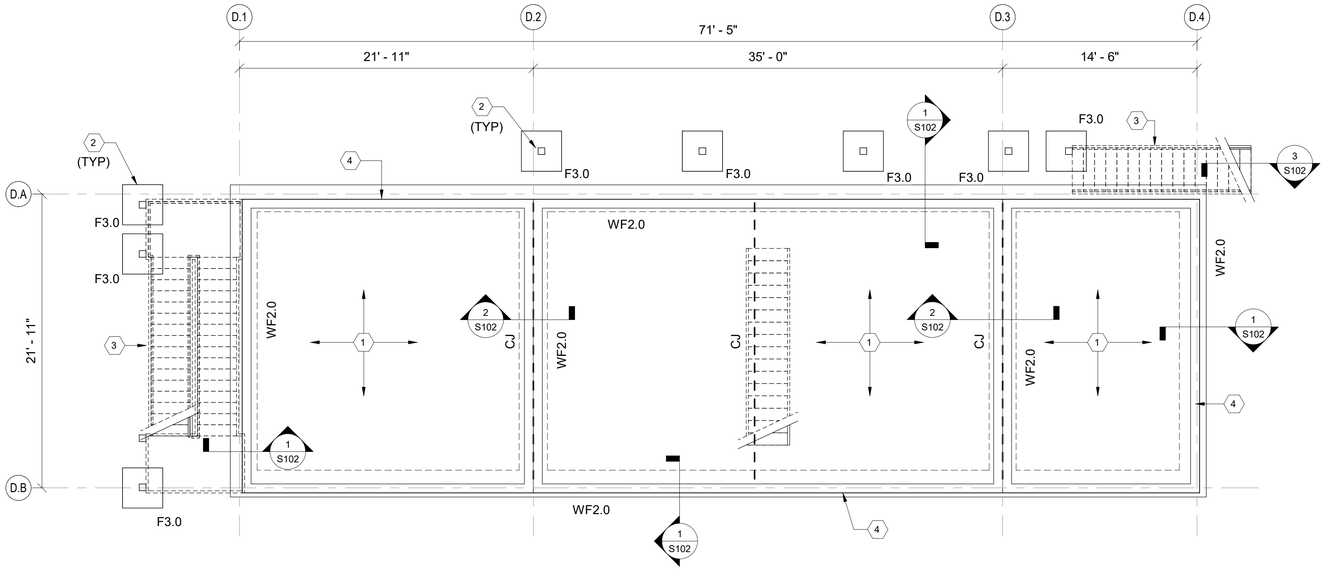

WHP DRILL-BURN BUILDING FOUNDATION PLAN

SCALE: 3/16" = 1'-0"

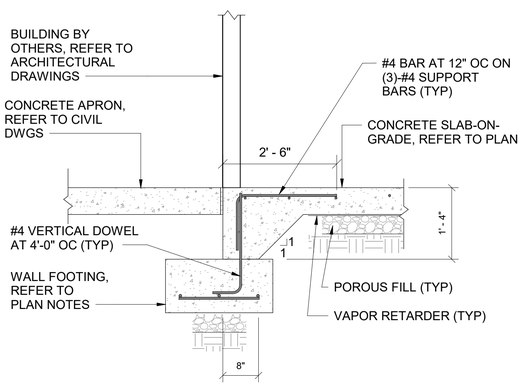

1 **SECTION**

SCALE: 3/4" = 1'-0" (S102)

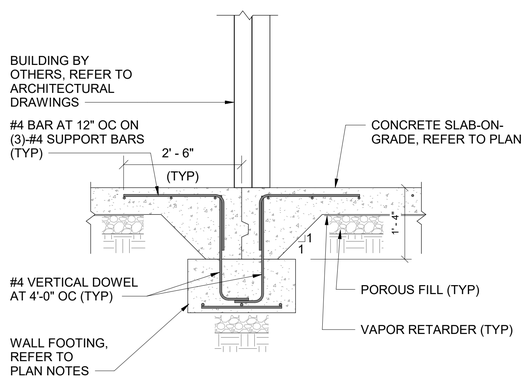

2 **SECTION**

SCALE: 3/4" = 1'-0" (S102)

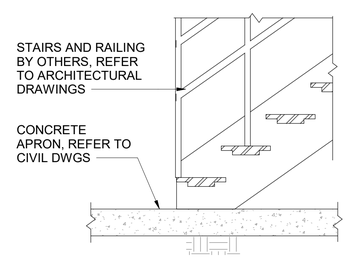

3 **SECTION**

SCALE: 3/4" = 1'-0" (S102)

GENERAL SHEET NOTES

1. DATUM FOR ALL ELEVATIONS GIVEN ON THIS PLAN IS FINISHED FIRST FLOOR ELEVATION = 0'-0". REFER TO CIVIL DRAWINGS FOR ACTUAL ELEVATION.
2. TOP OF CONCRETE SLAB IS AT 0'-0" UNLESS OTHERWISE INDICATED THUS [+____] ON PLAN.
3. WALL FOOTINGS NOTED THUS WFX.X. REFER TO WALL FOOTING SCHEDULE ON S501 FOR SIZE AND REINFORCING.
4. UNLESS NOTED THUS (-___), TOP OF ALL WALL FOOTINGS MUST BE AT -1'-4" BELOW DATUM.
5. UNLESS NOTED THUS (-___), TOP OF ALL COLUMN FOOTINGS MUST BE AT -0'-6" BELOW DATUM.
6. THE SYMBOL CJ INDICATES SLAB CONTROL JOINT, AND MAY BE CONSTRUCTION JOINT OR SAWED JOINT. REFER TO TYPICAL SLAB CONTROL JOINT DETAILS ON SHEET S-501.
7. NO FOUNDATION WORK SHALL BE INSTALLED UNTIL ALL UNDERGROUND UTILITIES, ETC. HAVE BEEN COORDINATED WITH FOUNDATION LOCATIONS AND ELEVATIONS.
8. FOR TYPICAL DETAILS AND GENERAL NOTES, REFER TO SHEETS S501 AND S502 .
9. GENERAL CONTRACTOR TO PROVIDE CONCRETE FILL FOR LEVELS ABOVE FIRST FLOOR. CONCRETE SLAB IS 4 INCH THICK NORMAL WEIGHT CONCRETE WITH FIBER MESH REINFORCING AND A MINIMUM COMPRESSIVE STRENGTH OF 4000 PSI AT 28 DAYS. REFER TO ARCHITECTURAL DRAWINGS FOR LOCATIONS OF ELEVATED SLABS.

NEW WORK KEYNOTES

1. PROVIDE 8" CONCRETE SLAB-ON-GRADE OVER 15 MIL VAPOR RETARDER ON 4" POROUS FILL MATERIAL. REINFORCE SLAB WITH #4 AT 12" O.C. EACH WAY PLACED 1 1/2" FROM TOP OF SLAB.
2. COLUMNS BY OTHERS
3. STAIRS BY OTHERS
4. BUILDING BY OTHERS

GRAPHIC SCALE(S)

SCALE: 3/16"=1'-0" 0 4' 8' 12'

SCALE: 3/4"=1'-0" 0 1' 2' 3'

WALKER the GROUP ARCHITECTURE incorporated
PO BOX 541, NEW BERN, NC 28563
252-636-8778

NORTH CAROLINA PROFESSIONAL ENGINEER SEAL 022830 07/28/2025 KEVIN M. ROOMSBURG

NRW ENGINEERING
Structural Consultants
748 Lord Dunmore Drive, Suite 101
Virginia Beach, VA 23464
Phone 757-474-0612
Fax 757-474-0919
NC license C-1393

CRAVEN COMMUNITY COLLEGE-PUBLIC SAFETY TRAINING CENTER

Executive Pkwy
New Bern, NC 28562

BID DOCUMENTS

SCO # 24-27879-01A

No.	Date	Revisions

Project Number: 2407.SAFE
Date: 07/28/2025
Drawn: DFS
Checked: KMR
Scale: AS NOTED

Drawing Title: **BID ALTERNATE 01 WHP DRILL/BURN BUILDIMG FOUNDATION PLAN AND SECTIONS**

Sheet Number: 118 Of 155

Drawing Number: **S102**

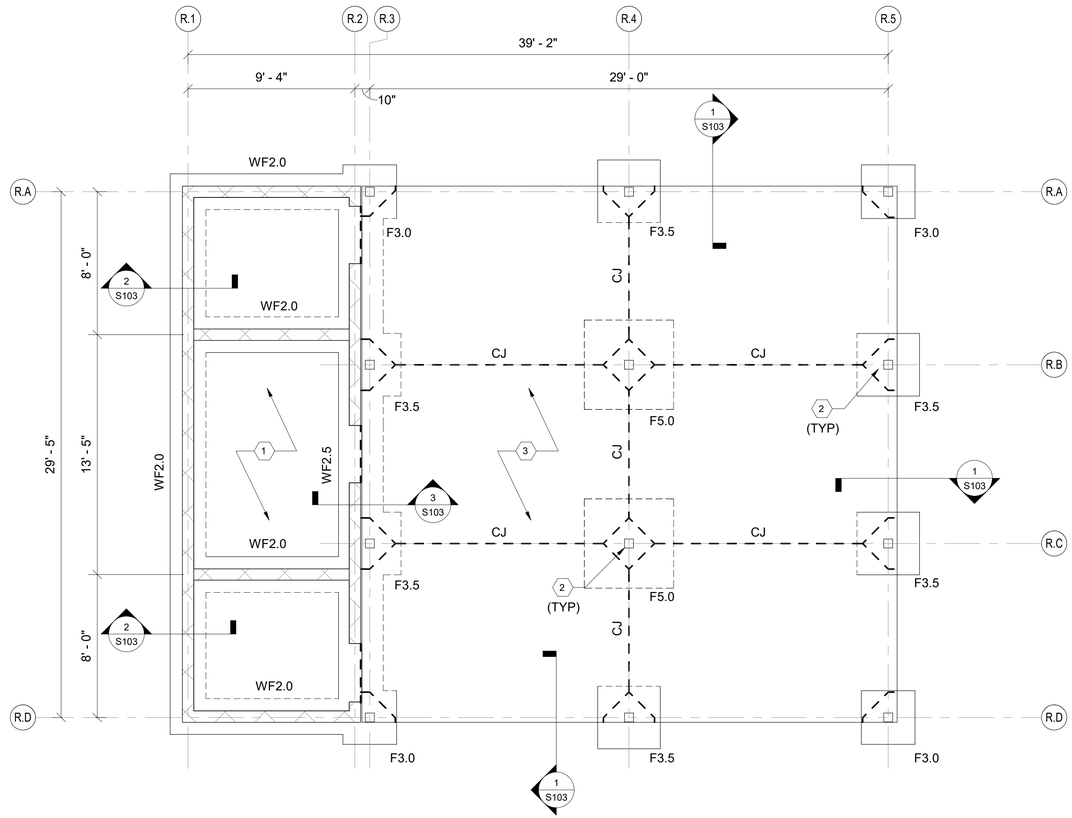

REHAB SHELTER FOUNDATION PLAN

SCALE: 1/4" = 1'-0"

PLAN NORTH

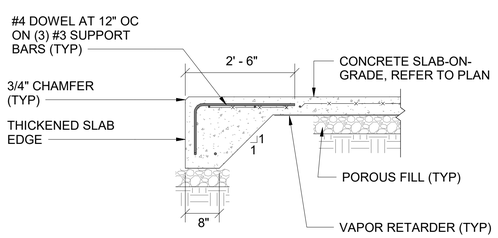

1 SECTION

SCALE: 3/4" = 1'-0" (S103)

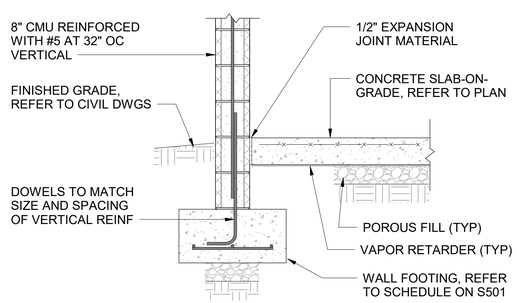

2 SECTION

SCALE: 3/4" = 1'-0" (S103)

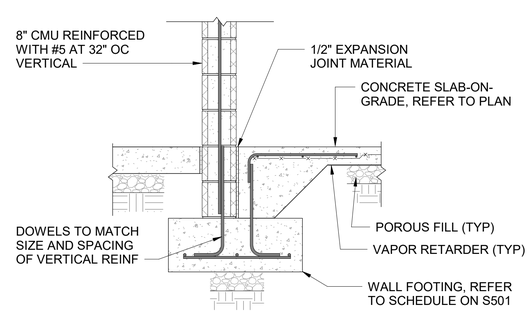

3 SECTION

SCALE: 3/4" = 1'-0" (S103)

GENERAL SHEET NOTES

1. DATUM FOR ALL ELEVATIONS GIVEN ON THIS PLAN IS FINISHED FIRST FLOOR ELEVATION = 0'-0". REFER TO CIVIL DRAWINGS FOR ACTUAL ELEVATION.
2. TOP OF CONCRETE SLAB IS AT 0'-0" UNLESS OTHERWISE INDICATED THUS [+____] ON PLAN.
3. WALL FOOTINGS NOTED THUS WFX.X. REFER TO WALL FOOTING SCHEDULE ON S501 FOR SIZE AND REINFORCING.
4. UNLESS NOTED THUS (-___), TOP OF ALL WALL FOOTINGS SHALL BE AT -1'-4" BELOW DATUM.
5. UNLESS NOTED THUS (-___), TOP OF ALL COLUMN FOOTINGS SHALL BE AT -1'-4" BELOW DATUM.
6. THE SYMBOL CJ INDICATES SLAB CONTROL JOINT, AND MAY BE CONSTRUCTION JOINT OR SAWED JOINT. REFER TO TYPICAL SLAB CONTROL JOINT DETAILS ON SHEET S-501.
7. NO FOUNDATION WORK SHALL BE INSTALLED UNTIL ALL UNDERGROUND UTILITIES, ETC. HAVE BEEN COORDINATED WITH FOUNDATION LOCATIONS AND ELEVATIONS.
8. FOR TYPICAL DETAILS AND GENERAL NOTES, REFER TO SHEETS S501 AND S502 .

NEW WORK KEYNOTES

1. PROVIDE 6" CONCRETE SLAB-ON-GRADE OVER 15 MIL VAPOR RETARDER ON 4" POROUS FILL MATERIAL. REINFORCE SLAB WITH 6x6 - W2.9xW2.9 WELDED WIRE FABRIC PLACED 1 1/2" FROM TOP OF SLAB.
2. CANOPY COLUMNS BY OTHERS
3. PROVIDE 4" CONCRETE SLAB-ON-GRADE OVER 15 MIL VAPOR RETARDER ON 4" POROUS FILL MATERIAL. REINFORCE SLAB WITH 6x6 - W2.9xW2.9 WELDED WIRE FABRIC PLACED 1 1/2" FROM TOP OF SLAB.

GRAPHIC SCALE(S)

SCALE: 1/4"=1'-0" 0 2' 4' 8'

SCALE: 3/4"=1'-0" 0 1' 2' 3'

WALKER the GROUP ARCHITECTURE incorporated
PO BOX 541, NEW BERN, NC 28563
252-636-8778

NORTH CAROLINA PROFESSIONAL ENGINEER SEAL 022830 07/28/2025 KEVIN M. ROOMSBURG

NRW ENGINEERING
Structural Consultants
748 Lord Dunmore Drive, Suite 101
Virginia Beach, VA 23464
Phone 757-474-0612
Fax 757-474-0919
NC license C-1393

CRAVEN COMMUNITY COLLEGE-PUBLIC SAFETY TRAINING CENTER

Executive Pkwy
New Bern, NC 28562

BID DOCUMENTS

SCO # 24-27879-01A

No.	Date	Revisions

Project Number: 2407.SAFE
Date: 07/28/2025
Drawn: DFS
Checked: KMR
Scale: AS NOTED

Drawing Title: **BID ALTERNATE 03 REHAB SHELTER FOUNDATION PLAN AND SECTIONS**

Sheet Number: 119 Of 155

Drawing Number: **S103**

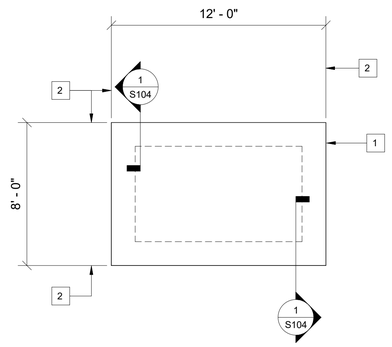

GATEHOUSE FOUNDATION PLAN

SCALE: 1/4" = 1'-0"

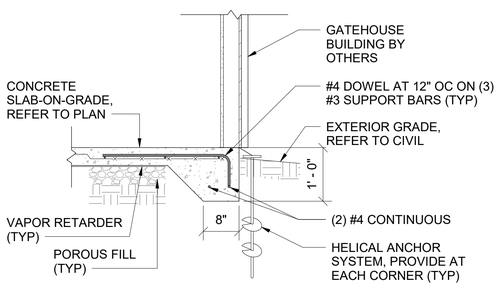

1 SECTION

SCALE: 3/4" = 1'-0" (S104)

GENERAL SHEET NOTES

1. DATUM FOR ALL ELEVATIONS GIVEN ON THIS PLAN IS FINISHED FIRST FLOOR ELEVATION = 0'-0". REFER TO CIVIL DRAWINGS FOR ACTUAL ELEVATION.
2. TOP OF CONCRETE SLAB IS AT +0'-0" UNLESS OTHERWISE INDICATED THUS [+____] ON PLAN.
3. UNLESS OTHERWISE NOTED PROVIDE 4" CONCRETE SLAB ON GRADE ON 6 MIL VAPOR BARRIER ON 4" POROUS FILL. REINFORCE SLAB WITH 6 x 6 - W2.9 x W2.9 WWF PLACED 1" CLEAR FROM TOP OF SLAB.
4. NO FOUNDATION WORK SHALL BE INSTALLED UNTIL ALL UNDERGROUND UTILITIES, ETC. HAVE BEEN COORDINATED WITH FOUNDATION LOCATIONS AND ELEVATIONS.
5. FOR TYPICAL DETAILS AND GENERAL NOTES, REFER TO SHEETS S501 AND S502.

NEW WORK KEYNOTES

1. GATEHOUSE BUILDING BY OTHERS.
2. EDGE OF SLAB.

GRAPHIC SCALE(S)

SCALE: 1/4"=1'-0" 0 2' 4' 8'

SCALE: 3/4"=1'-0" 0 1' 2' 3'

WALKER the GROUP ARCHITECTURE incorporated
PO BOX 541, NEW BERN, NC 28563
252-636-8778

NORTH CAROLINA PROFESSIONAL ENGINEER SEAL 022830 07/28/2025 KEVIN M. ROOMSBURG

NRW ENGINEERING
Structural Consultants
748 Lord Dunmore Drive, Suite 101
Virginia Beach, VA 23464
Phone 757-474-0612
Fax 757-474-0919
NC license C-1393

CRAVEN COMMUNITY COLLEGE-PUBLIC SAFETY TRAINING CENTER

Executive Pkwy
New Bern, NC 28562

BID DOCUMENTS

SCO # 24-27879-01A

No.	Date	Revisions

Project Number: 2407.SAFE
Date: 07/28/2025
Drawn: DFS
Checked: KMR
Scale: AS NOTED
Drawing Title: BID ALTERNATE 05 GATEHOUSE FOUNDATION PLAN AND SECTIONS

Drawing Number: S104

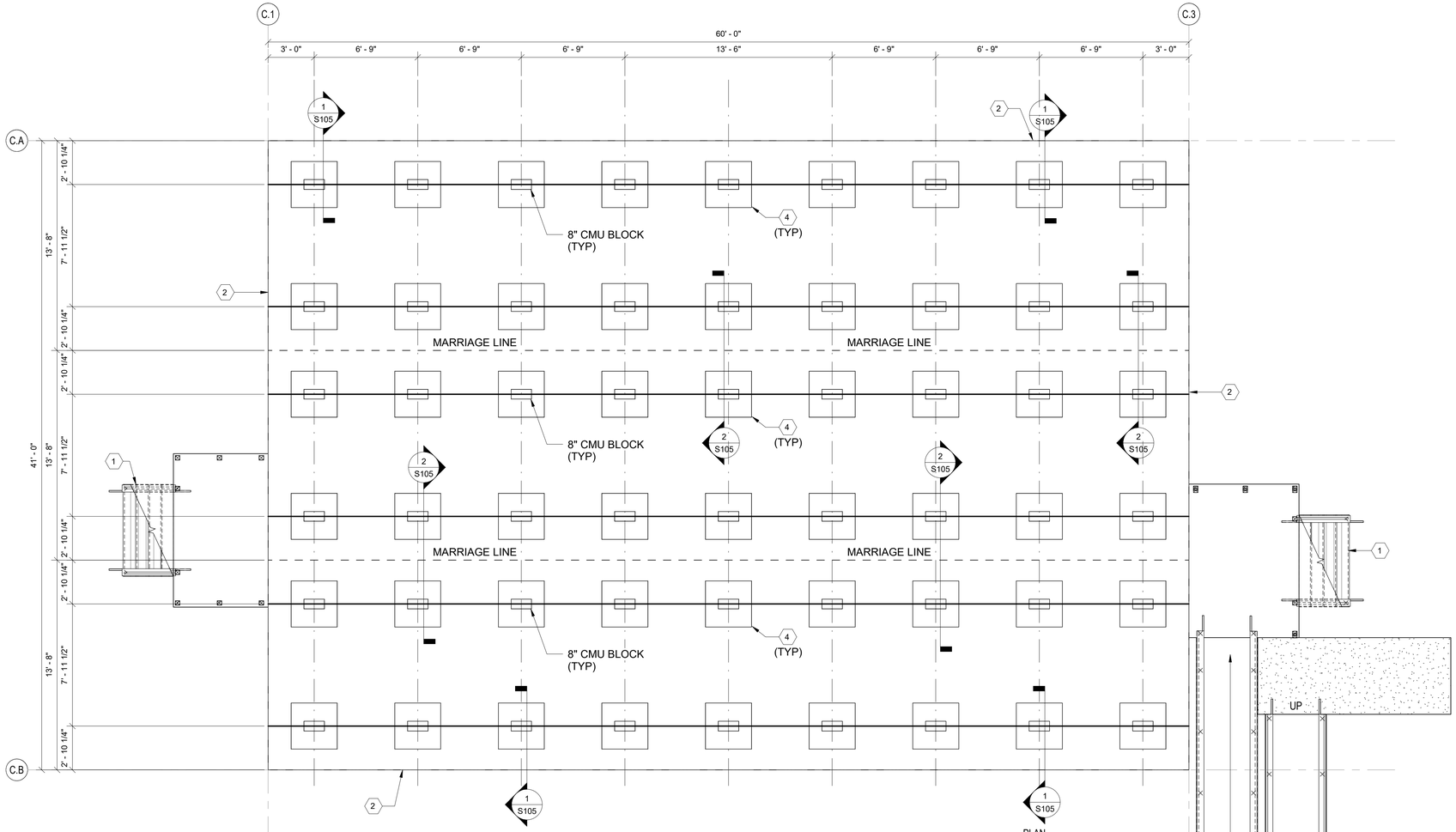

CLASSROOM BUILDING FOUNDATION PLAN

SCALE: 1/4" = 1'-0"

PLAN NORTH

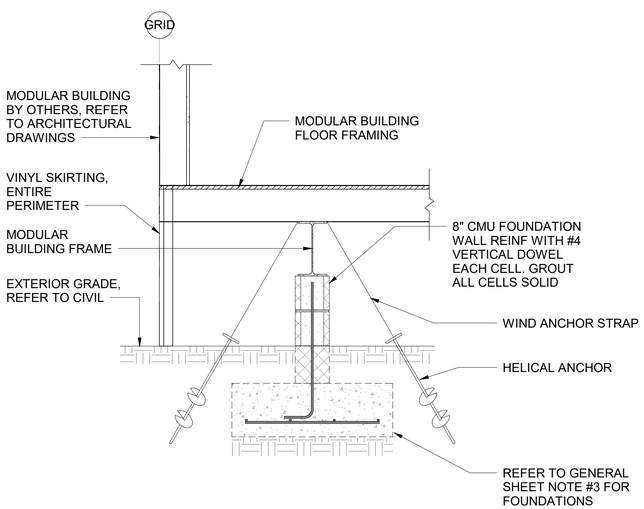

1 **SECTION**

SCALE: 3/4" = 1'-0" (S105)

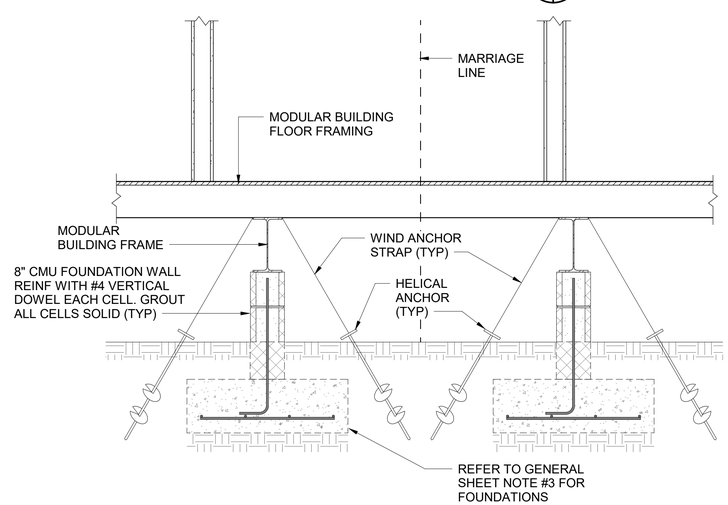

2 **SECTION**

SCALE: 3/4" = 1'-0" (S105)

GENERAL SHEET NOTES

1. DATUM FOR ALL ELEVATIONS GIVEN ON THIS PLAN IS FINISHED FIRST FLOOR ELEVATION = 0'-0". REFER TO CIVIL DRAWINGS FOR ACTUAL ELEVATION.
2. ALL TEMPORARY TRAILERS INSTALLED ON THIS PROJECT MUST BE APPROVED FOR INSTALLATION WITHIN A 132MPH (3-SECOND GUST) WIND ZONE.
3. THE FOUNDATION REQUIREMENTS DEPICTED HEREON ARE APPROXIMATE. THE CONTRACTOR MUST PROVIDE A FOUNDATION PIER PLAN, FOOTING DETAILS, STRAPPING PLANS, AND DETAILS FOR THE MOBILE STRUCTURE SELECTED. THIS INFORMATION MUST BE PREPARED BY A NORTH CAROLINA REGISTERED PROFESSIONAL ENGINEER AND MUST BE SUBMITTED TO THE CONTRACTING OFFICER FOR APPROVAL PRIOR TO ERECTION.
4. THE CONTRACTOR MUST PROVIDE ELEVATED ALUMINUM LANDINGS, STEPS AND HANDICAP ACCESSIBLE RAMPS TO ACCESS THE TEMPORARY TRAILER IN THE GENERAL ARRANGEMENT AS INDICATED.
5. NO FOUNDATION WORK SHALL BE INSTALLED UNTIL ALL UNDERGROUND UTILITIES, ETC. HAVE BEEN COORDINATED WITH FOUNDATION LOCATIONS AND ELEVATIONS.
6. FOR TYPICAL DETAILS AND GENERAL NOTES, REFER TO SHEETS S501 AND S502 .

NEW WORK KEYNOTES

1. ALUMINUM STAIRS BY MODULAR BUILDING MANUFACTURER
2. FACE OF MODULAR BUILDING (BY OTHERS)
3. ALUMINUM RAMP BY MODULAR BUILDING MANUFACTURER
4. 3'x3'x1' FOOTING WITH (4)-#4 BOTTOM EACH WAY

GRAPHIC SCALE(S)

SCALE: 1/4"=1'-0" 0 2' 4' 8'

SCALE: 3/4"=1'-0" 0 1' 2' 3'

WALKER the GROUP ARCHITECTURE incorporated
PO BOX 541, NEW BERN, NC 28563
252-636-8778

NORTH CAROLINA PROFESSIONAL ENGINEER SEAL 022830 07/28/2025 KEVIN M. ROOMSBURG

NRW ENGINEERING
Structural Consultants
748 Lord Dunmore Drive, Suite 101
Virginia Beach, VA 23464
Phone 757-474-0612
Fax 757-474-0919
NC license C-1393

CRAVEN COMMUNITY COLLEGE-PUBLIC SAFETY TRAINING CENTER

Executive Pkwy
New Bern, NC 28562

BID DOCUMENTS

SCO # 24-27879-01A

No.	Date	Revisions

Project Number: 2407.SAFE
Date: 07/28/2025
Drawn: DFS
Checked: KMR
Scale: AS NOTED

Drawing Title: **BID ALTERNATE 02 MODULAR CLASSROOM FOUNDATION PLAN**

Sheet Number: 122 Of 155

Drawing Number: **S105**

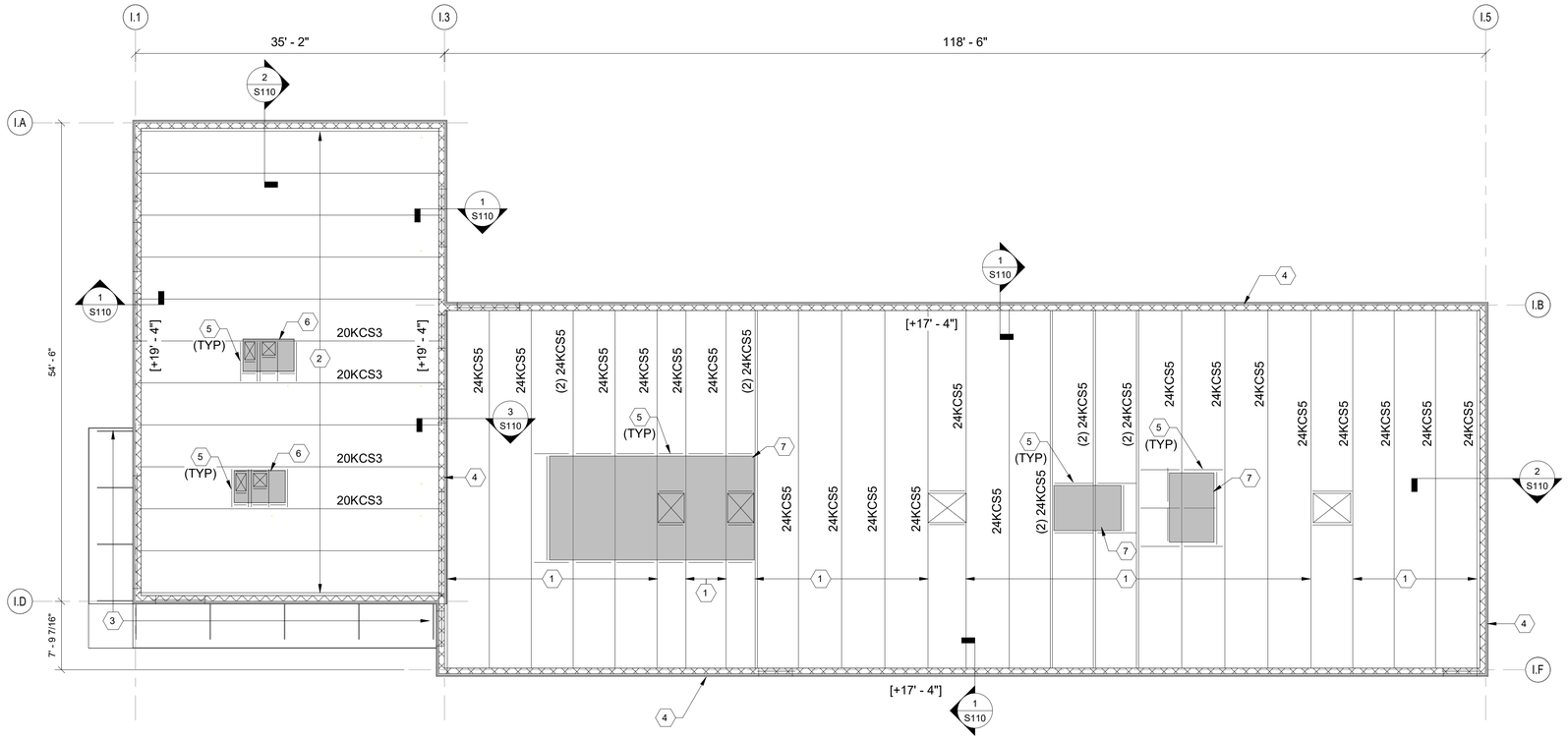

INDOOR RANGE ROOF FRAMING PLAN

SCALE: 1/8" = 1'-0"

PLAN NORTH

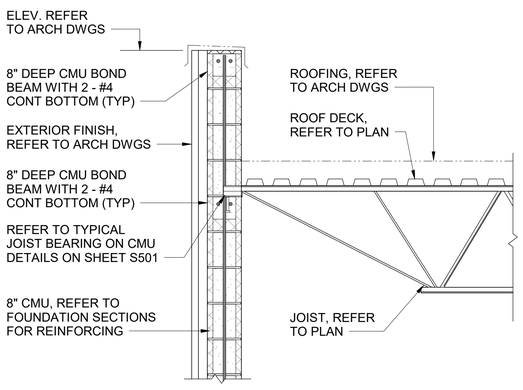

1 **SECTION**

SCALE: 3/4" = 1'-0" (S110)

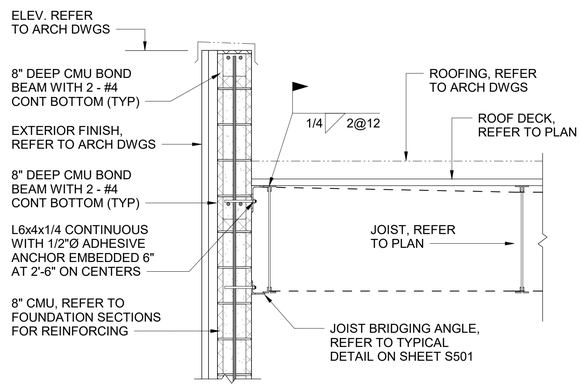

2 **SECTION**

SCALE: 3/4" = 1'-0" (S110)

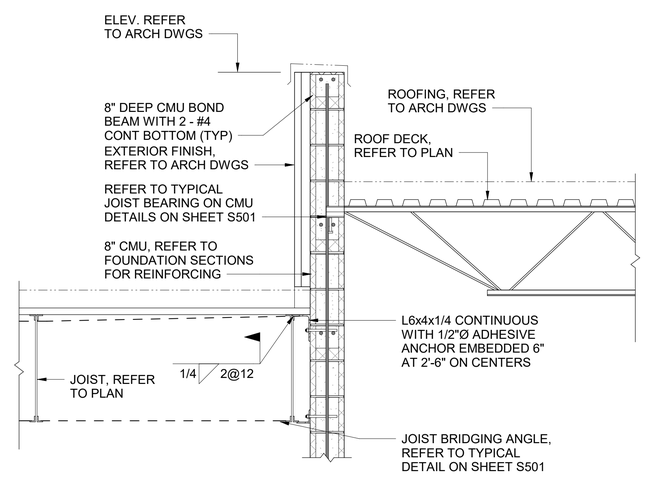

3 **SECTION**

SCALE: 3/4" = 1'-0" (S110)

GENERAL SHEET NOTES

1. DATUM FOR ALL ELEVATIONS GIVEN ON THIS PLAN IS FINISHED FIRST FLOOR ELEVATION = 0'-0". REFER TO CIVIL DRAWINGS FOR ACTUAL ELEVATION
2. THE TERM JOIST BEARING ELEVATION INDICATES TOP OF CONCRETE IN BOND BEAM SUPPORTING JOIST BEARING PLATES. JOIST BEARING ELEVATIONS ARE INDICATED THUS [+_____] ON PLAN.
3. ROOF CONSTRUCTION IS 1-1/2" DEEP, 20 GA. TYPE 'B' GALVANIZED STEEL ROOF DECK SUPPORTED ON OPEN WEB STEEL JOIST ON MASONRY BEARING WALLS AND STEEL BEAMS.
4. FOR LOCATION AND DIMENSIONS OF ROOF OPENINGS SEE ARCHITECTURAL AND MECHANICAL DRAWINGS.
5. UNLESS OTHERWISE SHOWN PROVIDE ANGLE 4" x 4" x 3/8" FRAMING AROUND ALL MECHANICAL AND ARCHITECTURAL ROOF OPENINGS.
6. MECHANICAL UNITS SHALL BE SUPPORTED ON OR SUSPENDED FROM A MINIMUM OF 3 JOIST AND AT PANEL POINTS ONLY. PROVIDE STEEL SUB FRAMING IF REQUIRED.
7. STAGGER JOIST AS REQUIRED TO OBTAIN REQUIRED BEARING ON BEAMS AND WALLS.
8. FOR LINTEL SCHEDULE SEE TYPICAL DETAIL SHEET. LINTELS ARE NOTED ON PLAN THUS: FOR EXACT LOCATION SEE ARCHITECTURAL AND MECHANICAL DRAWINGS.
9. FOR TYPICAL DETAILS AND GENERAL NOTES REFER TO SHEET S001, S002, S501 AND S502

NEW WORK KEYNOTES

1. 24KCS5 JOIST AT 5'-0" ON CENTERS MAX.
2. 20KCS3 JOIST AT 5'-0" ON CENTERS, MAX. UON.
3. CANOPY FRAMING BY OTHERS.
4. GROUT ALL MASONRY WALL CELLS SOLID FULL HEIGHT IN SHOOTING RANGE AREA.
5. L4x4x3/8 SPANNING BETWEEN JOISTS DIRECTLY UNDER CURB TIGHT TO UNDERSIDE OF ROOF DECK.
6. ROOF TOP MECHANICAL UNITS, REFER TO MECHANICAL DRAWINGS.
7. INDOOR RANGE ROOF TOP MECHANICAL UNITS, REFER TO VENDOR DRAWINGS

GRAPHIC SCALE(S)

SCALE: 3/16"=1'-0" 0 4' 8' 12'

SCALE: 3/4"=1'-0" 0 1' 2' 3'

WALKER the GROUP ARCHITECTURE incorporated
PO BOX 541, NEW BERN, NC 28563
252-636-8778

NORTH CAROLINA PROFESSIONAL ENGINEER SEAL 022830 07/28/2025 KEVIN M. ROOMSBURG

NRW ENGINEERING
Structural Consultants
748 Lord Dunmore Drive, Suite 101
Virginia Beach, VA 23464
Phone 757-474-0612
Fax 757-474-0919
NC license C-1393

CRAVEN COMMUNITY COLLEGE-PUBLIC SAFETY TRAINING CENTER

Executive Pkwy
New Bern, NC 28562

BID DOCUMENTS

SCO # 24-27879-01A

Revisions

No.	Date

Project Number: 2407.SAFE
Date: 07/28/2025
Drawn: DFS
Checked: KMR
Scale: AS NOTED
Drawing Title: INDOOR RANGE ROOF FRAMING PLAN AND SECTIONS

Sheet Number: 123 Of 155

Drawing Number: S110

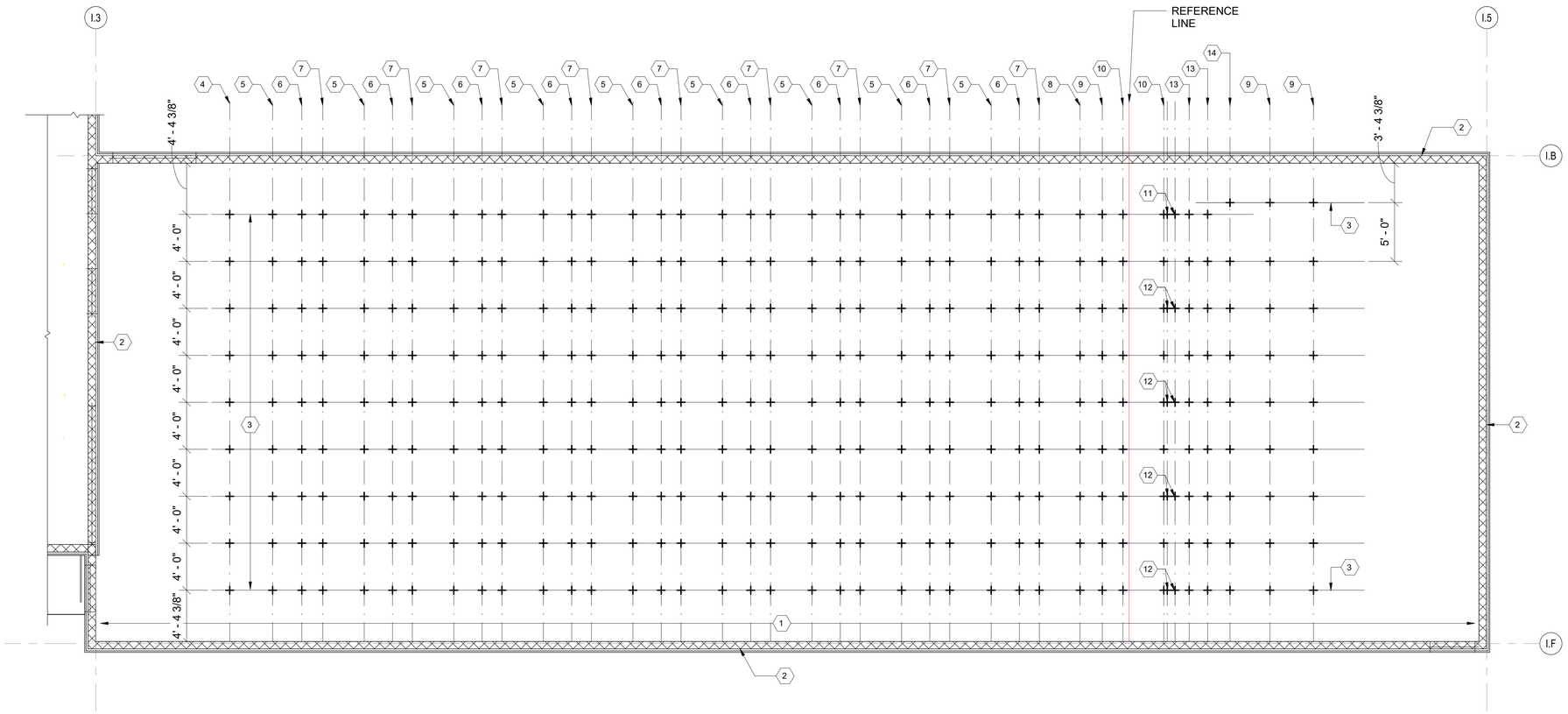

INDOOR RANGE BOTTOM CHORD PLAN

SCALE: 3/16" = 1'-0"

PLAN NORTH

GENERAL SHEET NOTES

1. DATUM FOR ALL ELEVATIONS GIVEN ON THIS PLAN IS FINISHED FIRST FLOOR ELEVATION = 0'-0". REFER TO CIVIL DRAWINGS FOR ACTUAL ELEVATION
2. STAGGER JOIST AS REQUIRED TO OBTAIN REQUIRED BEARING ON BEAMS AND WALLS.
3. FOR LINTEL SCHEDULE SEE TYPICAL DETAIL SHEET. LINTELS ARE NOTED ON PLAN THUS: FOR EXACT LOCATION SEE ARCHITECTURAL AND MECHANICAL DRAWINGS.
4. FOR TYPICAL DETAILS AND GENERAL NOTES REFER TO SHEET S001, S002, S501 AND S502

NEW WORK KEYNOTES

1. 24KCS5 JOIST BOTTOM CHORD. REFER TO ROOF FRAMING PLAN SHEET S106.
2. GROUT ALL MASONRY WALL CELLS SOLID WITH 4000 PSI CONCRETE FULL HEIGHT IN SHOOTING RANGE AREA.
3. UNISTRUT CHANNELS FOR SUPPORT OF ACTION TARGET BALLISTIC BAFFLES.
4. HANGING BAFFLE POINT LOADS ALONG LINE, WT = 170 LBS EACH
5. HANGING BAFFLE POINT LOADS ALONG LINE, WT = 255 LBS EACH
6. HANGING BAFFLE POINT LOADS ALONG LINE, WT = 500 LBS EACH
7. HANGING BAFFLE POINT LOADS ALONG LINE, WT = 190 LBS EACH
8. HANGING BAFFLE POINT LOADS ALONG LINE, WT = 230 LBS EACH
9. HANGING BAFFLE POINT LOADS ALONG LINE, WT = 300 LBS EACH
10. HANGING BAFFLE POINT LOADS ALONG LINE, WT = 155 LBS EACH
11. HANGING BAFFLE POINT LOADS, WT = 275 LBS
12. HANGING BAFFLE POINT LOADS, WT = 60 LBS
13. HANGING BAFFLE POINT LOADS ALONG LINE, WT = 80 LBS EACH
14. HANGING BAFFLE POINT LOADS ALONG LINE, WT = 150 LBS EACH

GRAPHIC SCALE(S)

SCALE: 3/16"=1'-0" 0 4' 8' 12'

SCALE: 3/4"=1'-0" 0 1' 2' 3'

WALKER the GROUP ARCHITECTURE incorporated
PO BOX 541, NEW BERN, NC 28563
252-636-8778

NORTH CAROLINA PROFESSIONAL ENGINEER SEAL 022830 07/28/2025 KEVIN M. ROOMSBURG

NRW ENGINEERING
Structural Consultants
748 Lord Dunmore Drive, Suite 101
Virginia Beach, VA 23464
Phone 757-474-0612
Fax 757-474-0919
NC license C-1393

CRAVEN COMMUNITY COLLEGE- PUBLIC SAFETY TRAINING CENTER

Executive Pkwy
New Bern, NC 28562

BID DOCUMENTS

SCO # 24-27879-01A

No.	Date	Revisions

Project Number: 2407.SAFE
Date: 07/28/2025
Drawn: DFS
Checked: KMR
Scale: AS NOTED
Drawing Title: INDOOR RANGE BOTTOM CHORD PLAN

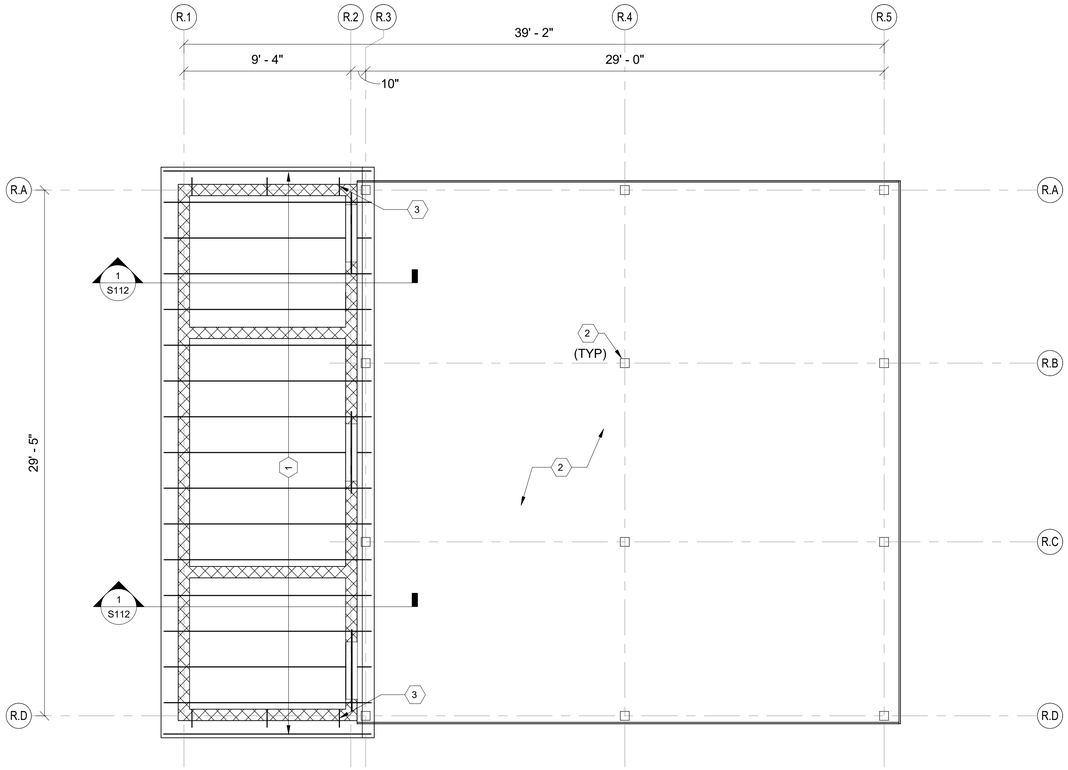

REHAB SHELTER ROOF FRAMING PLAN

SCALE: 1/4" = 1'-0"

PLAN NORTH

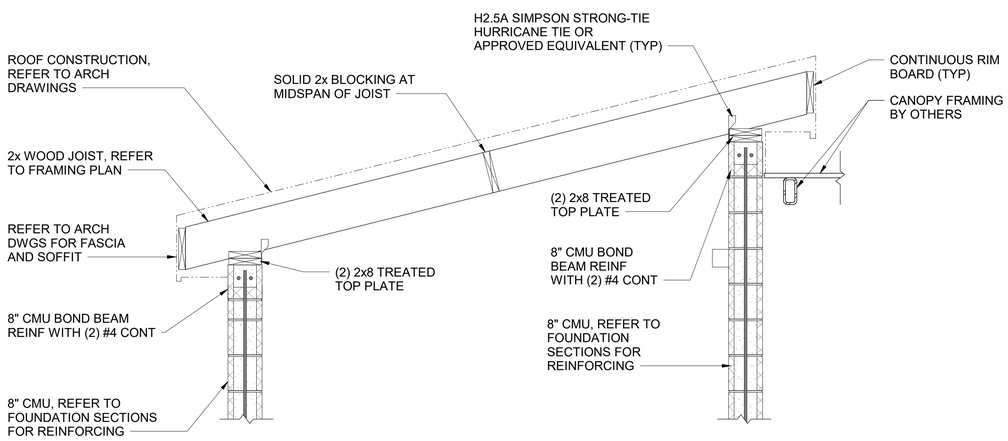

1 SECTION

SCALE: 3/4" = 1'-0" (S112)

GENERAL SHEET NOTES

1. DATUM FOR ALL ELEVATIONS GIVEN ON THIS PLAN IS FINISHED FIRST FLOOR ELEVATION = 0'-0". REFER TO CIVIL DRAWINGS FOR ACTUAL ELEVATION.
2. ROOF CONSTRUCTION IS 5/8" APA RATED SHEATHING SUPPORTED ON 2X WOOD JOISTS BEARING ON MASONRY BEARING WALLS.
3. FOR LINTEL SCHEDULE SEE TYPICAL DETAIL SHEET. LINTELS ARE NOTED ON PLAN THUS: FOR EXACT LOCATION SEE ARCHITECTURAL AND MECHANICAL DRAWINGS.
4. FOR TYPICAL DETAILS REFER TO SHEETS S501 AND S502.
5. GENERAL NOTES REFER TO SHEETS S001 AND S002.

NEW WORK KEYNOTES

1. 2x10 WOOD JOIST AT 24" OC.
2. CANOPY FRAMING AND COLUMNS BY OTHERS
3. 2x10 OUTLOOKERS. (TYP)

GRAPHIC SCALE(S)

SCALE: 1/4"=1'-0" 0 2' 4' 8'

SCALE: 3/4"=1'-0" 0 1' 2' 3'

WALKER the GROUP ARCHITECTURE incorporated
PO BOX 541, NEW BERN, NC 28563
252-636-8778

NORTH CAROLINA PROFESSIONAL SEAL 022830 07/28/2025 ENGINEER KEVIN M. ROOMSBURG

NRW ENGINEERING
Structural Consultants
748 Lord Dunmore Drive, Suite 101
Virginia Beach, VA 23464
Phone 757-474-0612
Fax 757-474-0919
NC license C-1393

CRAVEN COMMUNITY COLLEGE-PUBLIC SAFETY TRAINING CENTER

Executive Pkwy
New Bern, NC 28562

BID DOCUMENTS

SCO # 24-27879-01A

Revisions	
No.	Date

Project Number: 2407.SAFE
Date: 07/28/2025
Drawn: DFS
Checked: KMR
Scale: AS NOTED

Drawing Title: BID ALTERNATE 03 REHAB SHELTER ROOF FRAMING PLAN AND SECTIONS

Sheet Number: 125 Of 155

Drawing Number: S112

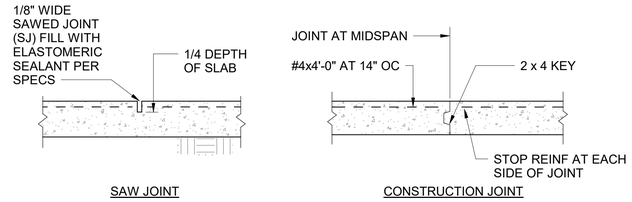

CONTROL JOINT MAY BE SAW JOINT OR CONST JOINT AT CONTRACTOR'S OPTION

TYPICAL SLAB CONTROL JOINT DETAIL

NOT TO SCALE

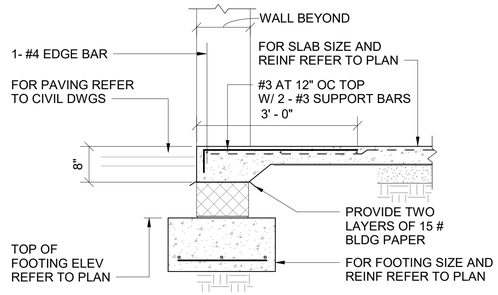

TYPICAL SILL DETAIL

NOT TO SCALE

WALL FOOTING SCHEDULE

MARK	DIMENSIONS		REINFORCING				NOTES
			LONGITUDINAL		TRANSVERSE		
	WIDTH	DEPTH	QUANTITY	SIZE	SIZE	SPACING	
WF2.0	2' - 0"	1' - 0"	3	5	4	4' - 0"	
WF2.5	2' - 6"	1' - 0"	4	4	4	4' - 0"	
WF3.0	3' - 0"	1' - 0"	4	4	4	4' - 0"	

COLUMN FOOTING SCHEDULE

MARK	DIMENSIONS			TOP AND BOTTOM REINFORCING				REMARKS
				SHORT WAY		LONG WAY		
	WIDTH	LENGTH	DEPTH	QUANTITY	SIZE	QUANTITY	SIZE	
F3.0	3' - 0"	3' - 0"	1' - 0"	5	4	5	4	
F3.5	3' - 6"	3' - 6"	1' - 4"	5	4	5	4	
F5.0	5' - 0"	5' - 0"	1' - 4"	6	5	6	5	

REINFORCEMENT LAP SPLICE SCHEDULE

BAR SIZE	LAP LENGTH
#4	19"
#5	24"
#6	29"
#7	42"
#8	48"
#9	54"

LAP LENGTH APPLIES TO CONCRETE REINFORCING BAR SPLICES FOR CONTINUOUS REINFORCEMENT

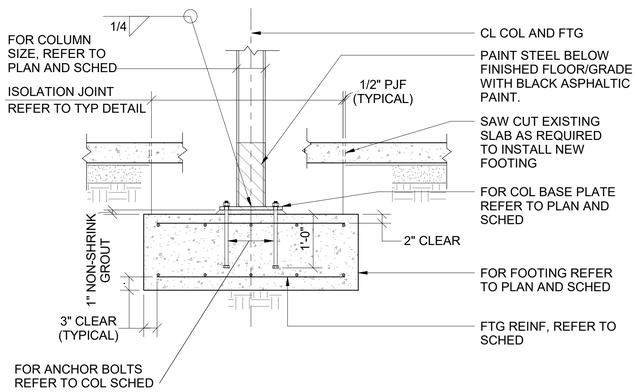

TYPICAL COLUMN AND FOOTING DETAIL

NOT TO SCALE

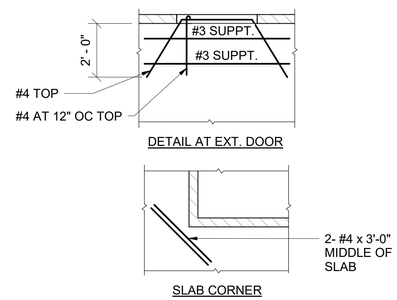

TYPICAL DETAIL SHOWING SLAB REINFORCING AT EXT. DOORS & CORNERS

NOT TO SCALE

MASONRY AND PRECAST CONCRETE LINTEL SCHED FOR CMU PARTITIONS

WALL WIDTH	TOP AND BOTTOM REINFORCING		
	4' SPAN & LESS CLEAR SPAN	OVER 4' TO 6' CLEAR SPAN	OVER 6' TO 8' CLEAR SPAN
8"	2 - # 4	2 - # 4	2 - # 5

NOTES:

1. FOR SIZE AND LOCATION OF OPENINGS REFER TO ARCH DRAWINGS.
2. BEARING SHALL BE 8" MINIMUM EACH END.
3. LINTELS UP TO 6'-4" SPAN SHALL BE 7 5/8" DEEP. LINTELS OVER 6'-4" SPAN SHALL BE 15 5/8" DEEP.
4. FOR HEAD DETAILS REFER TO ARCHITECTURAL DRAWINGS.
5. IN ADDITION TO MASONRY LINTELS AND AS REQUIRED BY ARCHITECTURAL DETAILS PROVIDE 4" x 6" x 5/16" LOOSE LINTELS AND 6" x 6" x 5/16" ATTACHED LINTELS FOR BRICK SUPPORT.
6. FOR SPANS OVER 6'-4" LINTEL ANGLE SHALL BE ATTACHED TO MASONRY OR PRECAST LINTEL WITH 3/4" DIAMETER EXPANSION BOLTS AT 3'-0" OC (MIN 3 PER ANGLE).
7. STEEL LINTEL ANGLES SHALL BE GALVANIZED, REFER TO SPECS
8. REINFORCING STEEL MUST CONFORM TO ASTM GRADE 60.
9. CONTRACTOR SHALL SUBMIT FOR APPROVAL SHOP DRAWINGS AND SCHEDULES SHOWING SIZE, DETAILS, LOCATION, ETC. FOR ALL LINTELS IN CMU WALLS.

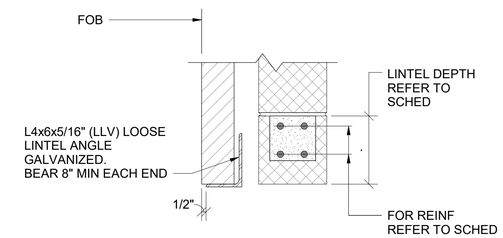

LOOSE STEEL BRICK SUPPORT

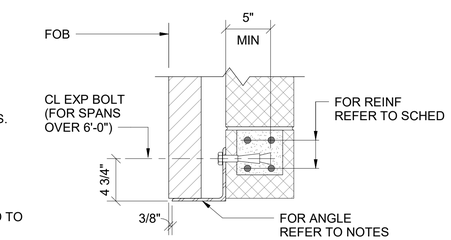

ATTACHED STEEL BRICK SUPPORT

TYPICAL LINTEL DETAILS

NOT TO SCALE

* WHERE JOISTS OCCUR ON BOTH SIDES OF WALL PROVIDE SEPARATE BRG PLATE INSTALLED AS SHOWN OR PROVIDE COMMON PLATE; WIDTH TO SUIT: 7" AT 8" CMU, 11" AT 12" CMU

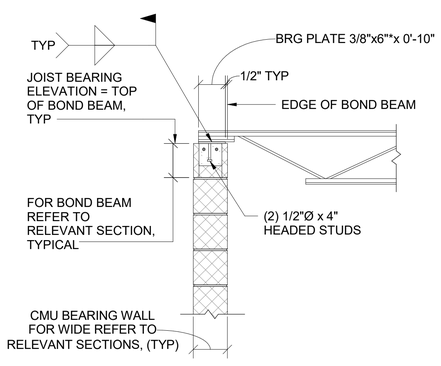

'K' - SERIES

TYPICAL JOIST BEARING ON CMU DETAILS

NOT TO SCALE

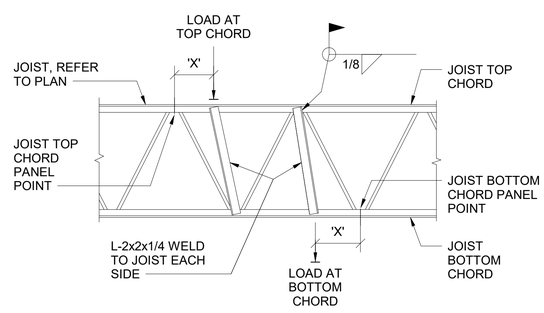

PROVIDE WEB REINFORCEMENT IF LOAD EXCEEDS 100 LBS AND 'X' IS GREATER THAN 6". LOADS SHALL BE APPLIED CONCENTRIC TO CHORDS. CONNECTION OF LOAD TO CHORD SHALL ENGAGE BOTH ANGLES OF CHORD. DO NOT USE C-CLAMPS OR BEAM CLAMPS ON CHORD ANGLE LEGS.

TYPICAL ADDED REINF AT JOIST SUPPORTING LOADS BETWEEN PANEL POINTS

NOT TO SCALE

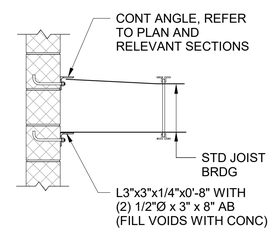

TYPICAL CONDITION

TYPICAL JOIST BRIDGING ANCHORAGE DETAILS

NOT TO SCALE

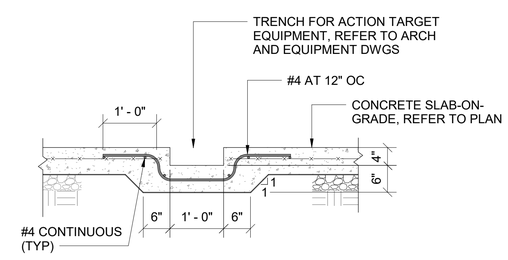

TYPICAL DETAILS FOR SLAB TRENCH

NOT TO SCALE

WALKER the GROUP ARCHITECTURE incorporated
PO BOX 541, NEW BERN, NC 28563
252-636-8778

NORTH CAROLINA PROFESSIONAL ENGINEER SEAL 022830 07/28/2025 KEVIN M. ROOMSBURG

NRW ENGINEERING
Structural Consultants
748 Lord Dunmore Drive, Suite 101
Virginia Beach, VA 23464
Phone 757-474-0612
Fax 757-474-0919
NC license C-1393

CRAVEN COMMUNITY COLLEGE- PUBLIC SAFETY TRAINING CENTER

Executive Pkwy
New Bern, NC 28562

BID DOCUMENTS

SCO # 24-27879-01A

Revisions

No.	Date

Project Number: 2407.SAFE
Date: 07/28/2025
Drawn: DFS
Checked: KMR
Scale: AS NOTED
Drawing Title: TYPICAL DETAILS

Sheet Number: 126 Of 155
Drawing Number: S501

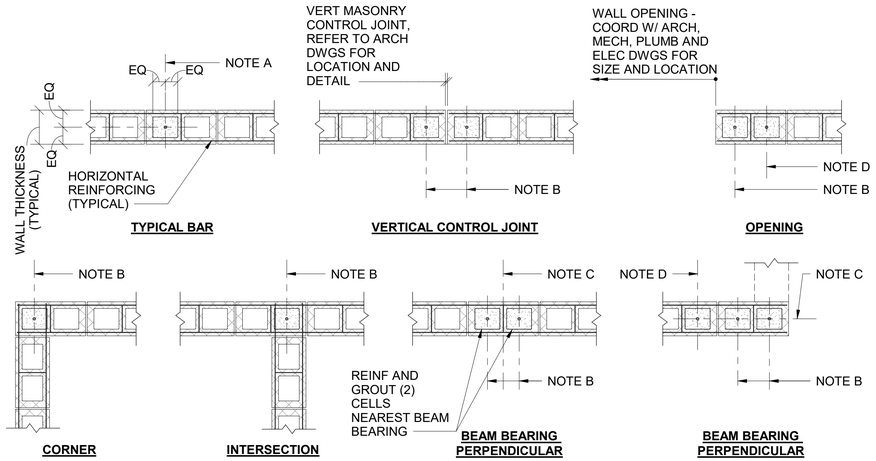

NOTES:

A. VERTICAL WALL REINFORCING BAR AS SPECIFIED REFER TO OTHER DETAILS AND SECTIONS FOR SIZE AND SPACING.

B. VERTICAL WALL REINFORCING BAR AS SPECIFIED. #4 BAR WHERE NOT OTHERWISE SPECIFIED.

C. CENTERLINE OF BEAM/GIRDER ABOVE, SEE FRAMING PLAN FOR EXACT LOCATION.

D. ADDITIONAL VERTICAL WALL REINFORCING BARS MAY BE REQUIRED, REFER TO PLANS AND OTHER DETAILS.

TYPICAL CONCRETE MASONRY VERTICAL WALL REINFORCING DETAILS

NOT TO SCALE

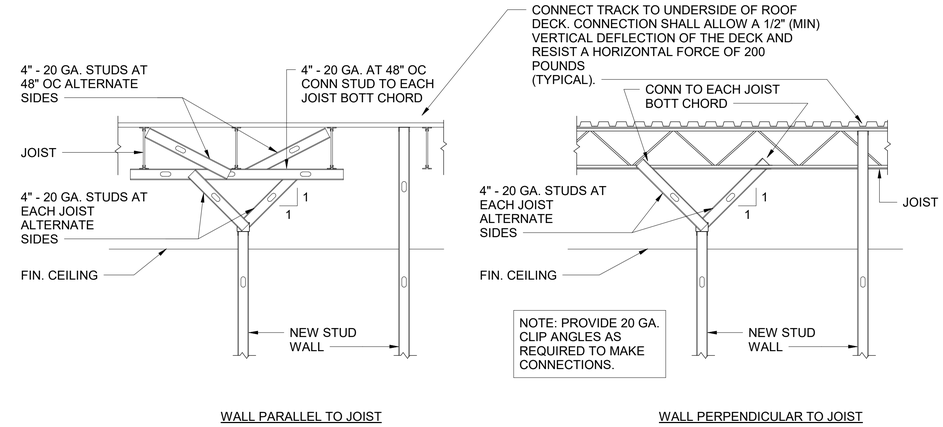

TYPICAL METAL STUD WALL BRACING DETAILS

SCALE: 1/2" = 1'-0"

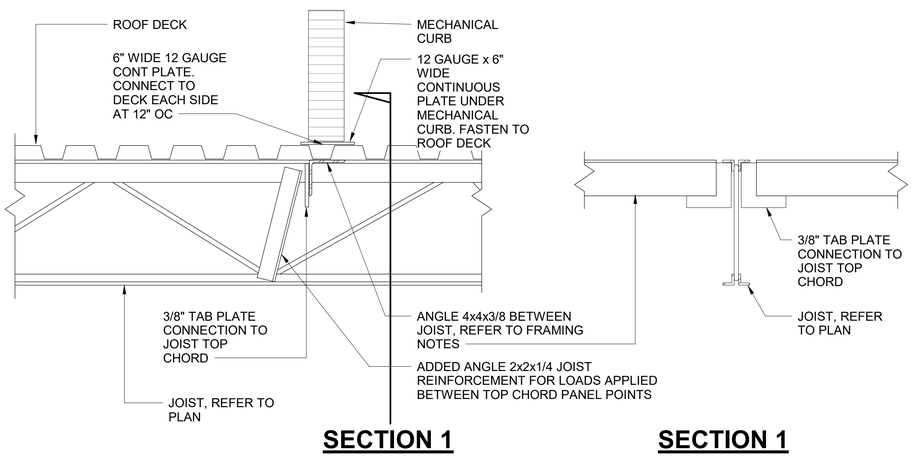

TYPICAL ROOF OPENING AND MECHANICAL CURB SUPPORT DETAIL

NOT TO SCALE

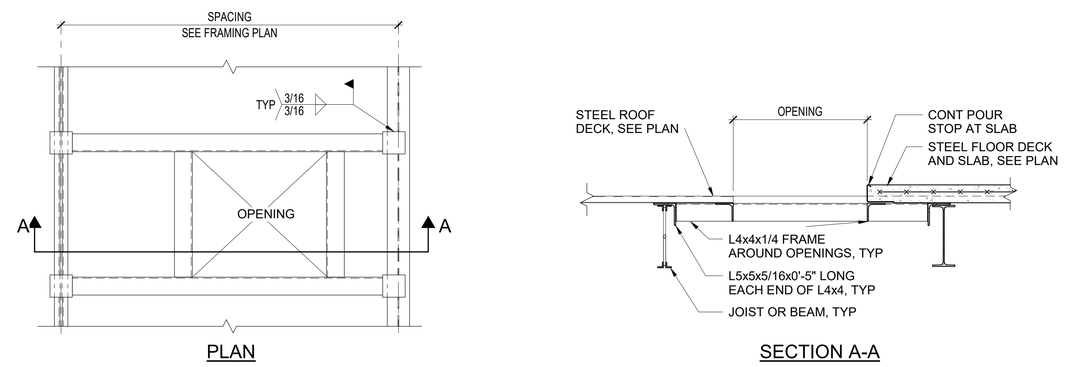

TYPICAL ROOF OPENING

NOT TO SCALE

WALKER the GROUP ARCHITECTURE incorporated
PO BOX 541, NEW BERN, NC 28563
252-636-8778

NORTH CAROLINA PROFESSIONAL ENGINEER SEAL 022830 07/28/2025 KEVIN M. ROOMSBURG

NRW ENGINEERING
Structural Consultants
748 Lord Dunmore Drive, Suite 101
Virginia Beach, VA 23464
Phone 757-474-0612
Fax 757-474-0919
NC license C-1393

CRAVEN COMMUNITY COLLEGE-PUBLIC SAFETY TRAINING CENTER

Executive Pkwy
New Bern, NC 28562

BID DOCUMENTS

SCO # 24-27879-01A

Revisions

No.	Date

Project Number: 2407.SAFE
Date: 07/28/2025
Drawn: DFS
Checked: KMR
Scale: AS NOTED
Drawing Title: TYPICAL DETAILS

Sheet Number: 127 Of 155
Drawing Number: S502

FIXTURE HW DISCHARGE TEMPERATURES

PLUMBING FIXTURE	MAXIMUM DISCHARGE TEMPERATURE	REFERENCE STANDARD
PUBLIC HAND-WASHING FACILITIES	>85°F & <110°F	ASSE 1070

NOTE: PROVIDE LISTED TEMPERING DEVICE FOR EACH FIXTURE PER TABLE.

INTERDISCIPLINARY COORDINATION NOTE:

IF THIS CONTRACTOR SHOULD ELECT TO PROPOSE ANY EQUIPMENT THAT HAS DIFFERENT PHYSICAL OR ELECTRICAL CHARACTERISTICS, ETC. WHEN COMPARED TO THE BASIS OF DESIGN EQUIPMENT, THIS CONTRACTOR IS RESPONSIBLE FOR COORDINATING THESE CHANGES WITH THE OTHER TRADES PRIOR TO ORDERING OF EQUIPMENT. IF THERE SHOULD BE ANY ADDITIONAL WORK INCURRED BY THE OTHER TRADES AS A RESULT OF THIS CONTRACTOR'S EQUIPMENT SELECTION, ALL COSTS ASSOCIATED WITH THE ADDITIONAL WORK SHALL BE BORNE BY THIS CONTRACTOR.

SFU NOTE:

THE REHAB SHELTER ADDS 27.8 SFU'S TO THE DOMESTIC WATER SYSTEM.

THE INDOOR RANGE ADDS 30.3 SFU'S TO THE DOMESTIC WATER SYSTEM.

DFU NOTE:

THE REHAB SHELTER ADDS 13.5 DFU's TO THE SANITARY WASTE SYSTEM.

THE INDOOR RANGE ADDS 15.0 DFU'S TO THE SANITARY WASTE SYSTEM.

ENERGY CODE COMPLIANCE PATH:

- ☐ ASHRAE 90.1
- ☒ 2018 NCECC CHAPTER 4 - PRESCRIPTIVE
- ☐ 2018 NCECC CHAPTER 4 - PERFORMANCE

GENERAL NOTES

1. ALL PLUMBING VENTS IN EXTERIOR WALLS SHALL BE OFFSET A MINIMUM OF 3'-0" AT ROOF BEFORE ROOF PENETRATION.
2. ALL PLUMBING VENTS WITHIN A 10'-0" RADIUS OF ANY ROOF TOP UNIT SHALL BE EXTENDED TO A HEIGHT OF 3'-0" ABOVE THE FRESH AIR INTAKE.
3. ALL PLUMBING & PLUMBING MATERIALS SHALL MEET THE REQUIREMENTS OF LOCAL PLUMBING CODES AND THE 2018 NORTH CAROLINA STATE PLUMBING CODE.
4. SLOPES & INVERT ELEVATIONS OF ALL INTERIOR PIPING SHALL BE ESTABLISHED BEFORE ANY PIPING IS INSTALLED, IN ORDER THAT PROPER SLOPES WILL BE MAINTAINED. ALL PIPING SHALL BE RUN TO AVOID CONFLICTS WITH OTHER TRADES.
5. COORDINATE WITH ARCHITECTURAL WORKING DRAWINGS BEFORE ROUGHING-IN PLUMBING FIXTURES.
6. MAKE PROPER HOT & COLD WATER, HOT WATER RECIRCULATING, WASTE, & VENT, ETC., PIPING CONNECTIONS TO ALL FIXTURES & EQUIPMENT EVEN THOUGH ALL BRANCHES, FITTINGS & CONNECTIONS ARE NOT SHOWN.
7. COORDINATE LOCATION OF ALL EQUIPMENT, FIXTURES & PIPING WITH STRUCTURAL & ALL OTHER TRADES. PIPING RUN AC SHALL BE RUN AS HIGH AS POSSIBLE.
8. ALL OPENINGS IN CEILINGS & PLENUM WALLS FOR PLUMBING PIPES SHALL BE SEALED AIR TIGHT.
9. SEE SITE PLAN FOR EXTENT OF ALL PIPING LEAVING & ENTERING BUILDING.
10. ALL HOT & COLD WATER PIPING INDICATED TO RUN ABOVE FINISHED CEILINGS OR IN EXTERIOR WALLS SHALL BE INSTALLED ON THE CONDITIONED SPACE SIDE OF THE BUILDING INSULATION.
11. SLOPES & INVERT ELEVATIONS OF EXTERIOR SEWERS, MANHOLES, ETC., SHALL BE ESTABLISHED & VERIFIED BY PLUMBING CONTRACTOR BEFORE ANY PIPING IS INSTALLED IN ORDER THAT PROPER SLOPES WILL BE MAINTAINED & NECESSARY INVERT ELEVATIONS OBTAINED.
12. PROVIDE ASSE 1072 TRAP SEAL FOR ALL FLOOR DRAINS.
13. IT IS THE INTENTION OF THESE DRAWINGS TO COVER ALL WORK & MATERIAL FOR A COMPLETE FIRST CLASS INSTALLATION. ANY EQUIPMENT, PLUMBING FIXTURE, TRIM HARDWARE &/OR DEVICES USUALLY UTILIZED IN THE CLASS OF WORK, THOUGH NOT SPECIFICALLY MENTIONED OR SHOWN ON THE DRAWINGS, BUT WHICH MAY BE NECESSARY FOR THE SATISFACTORY COMPLETION OF THE WORK (AS DETERMINED BY THE ARCHITECT) SHALL BE FURNISHED & INSTALLED BY THE CONTRACTOR AS PART OF HIS TOTAL WORK.
14. VERIFY ALL EXISTING CONDITIONS PRIOR TO BEGINNING WORK OR ORDERING EQUIPMENT, PIPING, FIXTURES, ETC.
15. SEAL AROUND ALL WALL PENETRATIONS AIR TIGHT AT MECHANICAL ROOM, & FILL ANY VOIDS WITH MORTAR.
16. INSTALL ALL EQUIPMENT IN ACCORDANCE WITH MANUFACTURER'S RECOMMENDATIONS & ALL APPLICABLE LISTING REQUIREMENTS.

LEGENDS & ABBREVIATIONS

- DOMESTIC COLD WATER (CW)
- DOMESTIC HOT WATER (HW)
- SANITARY WASTE PIPE (WP)
- SANITARY VENT PIPE (VP)
- PIPE SLEEVE
- SMOKE PARTITION
- 1 HOUR FIRE RATED PARTITION
- 1 HOUR FIRE & SMOKE RATED PARTITION
- 2 HOUR FIRE RATED PARTITION
- 2 HOUR FIRE & SMOKE RATED PARTITION
- PIPE TURN UP
- PIPE TURN DOWN (DN)
- PIPE CAPPED
- CLEAN OUT (CO)
- WALL CLEAN OUT (WCO)
- REDUCED PRESSURE BACKFLOW PREVENTER (RPBP)
- DUAL CHECK BACKFLOW PREVENTER (DCBP)
- BALANCING VALVE (BV)
- BALL VALVE
- CHECK VALVE (CV)
- STRAINER
- FLOOR CLEAN OUT (FCO) GROUND CLEAN OUT (GCO)
- FLOOR DRAIN (FD)
- FLOOR SINK (FS)
- ACCESS PANEL (AP)
- VENT THROUGH ROOF (VTR)
- NEW WORK NOTE DESIGNATION
- DETAIL/RISER/ENLARGED PLAN
- SHEET WHERE SHOWN/CUT

AC	ABOVE CEILING
ADA	AMERICANS WITH DISABILITIES ACT COMPLIANT
AFF	ABOVE FINISHED FLOOR
ASSE	AMERICAN SOCIETY OF SANITARY ENGINEERING
BF	BELOW FLOOR
BFF	BELOW FINISH FLOOR
BG	BELOW GRADE
DFU	DRAINAGE FIXTURE UNIT
ET	EXPANSION TANK
F	FAHRENHEIT
FT	FEET
GAL	GALLON
GPH	GALLONS PER HOUR
GPM	GALLONS PER MINUTE
HP	HORSE POWER
INV	INVERT
KW	KILOWATTS
MAX	MAXIMUM
MIN	MINIMUM
P-#	PLUMBING FIXTURE MARK
SFU	SUPPLY FIXTURE UNIT
TEMP	TEMPERATURE
TG	TRAP GUARD DEVICE
TYP	TYPICAL
UC	UNDER COUNTER
UL	UNDERWRITERS LABORATORY
W/	WITH
WH-#	WATER HEATER MARK
WHA-X	WATER HAMMER ARRESTOR - SIZE
WS	WASTE STACK
°	DEGREE
Ø	PHASE/DIAMETER

WATER HAMMER ARRESTOR SCHEDULE

MARK	A	B	C	D	E	F	REMARKS
FIXTURE UNITS	1 - 11	12 - 32	-	-	-	-	SEE NOTES

NOTES:

1. INSTALL PER MANUFACTURER'S RECOMMENDATIONS.

ELECTRIC WATER HEATER SCHEDULE

TAG	TYPE	LOCATION	STORAGE (GAL)	RECOVERY (GPH)		ELECTRICAL DATA			EXPANSION TANK		MOUNTING	REMARKS
				80°F	100°F	KILOWATTS	VOLTS	PHASE	TOTAL VOLUME (GAL)	ACCEPTANCE VOLUME (GAL)		
WH-1	TANK	INDOOR RANGE RM 104	20	15	12	3	208	1	0.47	0.2	WALL	SEE NOTES
WH-2R1 / WH-2R2	TANK	REHAB SHELTER RM 102	20	10	8	2	240	1	0.47	0.2	WALL	SEE NOTES

NOTES:

1. INSTALL PER MANUFACTURER'S RECOMMENDATIONS.

BACKFLOW PREVENTER SCHEDULE

HAZARD DESCRIPTION	HAZARD	DEVICE REQUIRED	DEVICE LISTING
DOMESTIC WATER SERVICE HIGH HAZARD	HIGH	REDUCED PRESSURE PRINCIPLE BACFKLOW PREVENTER	ASSE 1013
BIN STYLE ICE MAKER	LOW	DUAL CHECK VALVE ASSY	ASSE 1024
MOP SINK FAUCET	HIGH	HOSE CONNECTION VACUUM BREAKER	ASSE 1011

WALKER the GROUP ARCHITECTURE incorporated
PO BOX 541, NEW BERN, NC 28563
252-636-8778

NORTH CAROLINA PROFESSIONAL SEAL 058819 ENGINEER TIMOTHY N. HAHN

CRAVEN COMMUNITY COLLEGE-PUBLIC SAFETY TRAINING CENTER

525 Executive Pkwy
New Bern, NC 28562

BID DOCUMENTS

SCO # 24-27879-01A

Revisions

No.	Date

Project Number: 2407.SAFE
Date: 07/28/25
Drawn: ADB
Checked: WAR
Scale: AS NOTED
Drawing Title:

LEGEND, NOTES AND ABBREVIATIONS

Sheet Number
Of 157

Drawing Number
P-001

Pace COLLABORATIVE MECHANICAL ELECTRICAL ENGINEERS WWW.PACE-ENGINEERING.COM

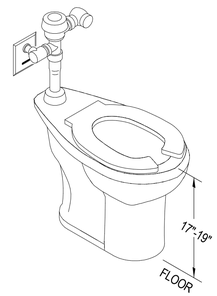

SPECIFICATIONS:
1. VITREOUS CHINA ADA COMPLIANT FLOOR MOUNTED FLUSH VALVE WATER CLOSET WITH FULLY GLAZED 2-1/8" TRAPWAY, ELONGATED SIPHON JET BOWL, 1.28 GALLONS PER FLUSH. FLUSH HANDLE LOCATED ON WIDE SIDE OF ROOM.
2. CHROME PLATED CAST BRASS EXPOSED ADA COMPLIANT SENSOR OPERATED, HARD WIRED FLUSH VALVE WITH ADJUSTABLE TAILPIECE, TRANSFORMER, SCREWDRIVER ANGLE STOP, & VANDAL RESISTANT STOP CAP. MATERIALS SHALL BE CHLORAMINE RESISTANT.
3. WHITE SOLID PLASTIC OPEN FRONT ELONGATED SEAT WITH EXTERNAL CHECK HINGES, INTEGRAL BUMPERS, LESS COVER.

MARK	DESCRIPTION	TRAP	PIPE SIZES				MOUNTING
			HW	CW	WP	VP	
P-1	ADA - FLUSH VALVE WATER CLOSET	INTEGRAL	-	1"	4"	2"	FLOOR

ADA - WATER CLOSET

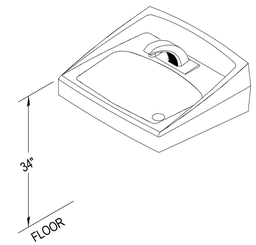

SPECIFICATIONS:
1. VITREOUS CHINA ADA COMPLIANT WALL MOUNTED LAVATORY WITH FRONT OVERFLOW & FAUCET HOLES ON 4" CENTERS & SELF DRAINING DECK.
2. CHROME PLATED SOLID BRASS HARD WIRED ELECTRONIC FAUCET WITH PROXIMITY OPERATION SENSORS, POLISH CHROME PLATED FINISH, CERAMIC VALVE, 0.5 GPM VANDAL RESISTANT AERATOR, INTEGRATED STRAINER TO PROTECT SOLENOID VALVE & AERATOR, LESS POP-UP. BELOW DECK THERMOSTATIC MIXING VALVE SET AT 110°F MAX (ASSE 1070). & TRANSFORMER.
3. CHROME FINISH CAST BRASS LOOSE KEY ANGLE STOPS WITH CHROME FINISH RIGID SUPPLY RISERS. OFFSET GRID STRAINER AND ADJUSTABLE 'P'-TRAP WITH ANSI AND ADA APPROVED, VINYL MOLDED INSULATION WITH NYLON FASTENER KITS, PAINTED AS DIRECTED BY THE ARCHITECT.
4. CONCEALED FLOOR MOUNT SUPPORT. WALL BRACKETS SHALL NOT BE USED.

MARK	DESCRIPTION	TRAP	PIPE SIZES				MOUNTING
			HW	CW	WP	VP	
P-2	ADA - WALL MOUNTED LAVATORY	'P'-TRAP	1/2"	1/2"	2"	1-1/2"	WALL MOUNTED

ADA - WALL MOUNTED LAVATORY

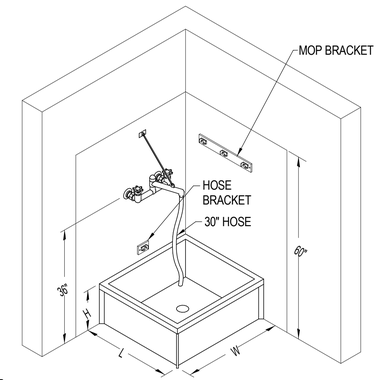

SPECIFICATIONS:
1. MOP BASIN SHALL BE 24"Wx24"Lx10"H SINGLE PIECE MOLDED STONE.
2. FAUCET SHALL BE EXPOSED YOKE WALL MOUNT UTILITY FAUCET WITH CAST BRASS BODY, 1/4 TURN CERAMIC VALVE CARTRIDGES, INTEGRAL VACUUM BREAKER & WALL BRACE. PROVIDE WITH OFFSET SHANKS WITH INTEGRAL STOPS.
3. MOUNT FAUCET 36" AFF.
4. PROVIDE WALL MOUNTED MOP BRACKET, STAINLESS STEEL STRAINER, QUICK DRAIN CONNECTIONS, 30" HOSE & HOSE BRACKET.
5. FRP SHALL EXTEND 2'-0" PAST EDGE OFF FIXTURE.

MARK	DESCRIPTION	TRAP	PIPE SIZES				MOUNTING
			HW	CW	WP	VP	
P-3	FLOOR MOUNTED MOP BASIN	'P'-TRAP	1/2"	1/2"	3"	1-1/2"	FLOOR

MOP BASIN

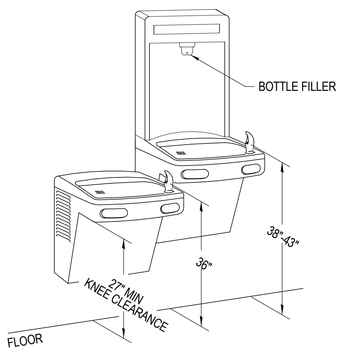

SPECIFICATIONS:
1. DUAL BASIN UNIT SHALL DELIVER 8.0 GPH OF 50°F WATER @ 90°F AMBIENT TEMPERATURE. TO INCLUDE AUTOMATIC BOTTLE FILLER SENSOR, FRONT AND SIDE PUSH PADS ACTIVATED BUBBLER. UNIT SHALL BE POWDER COATED GALVANIZED STEEL.
2. CHROME FINISH CAST BRASS LOOSE KEY ANGLE STOPS WITH CHROME FINISH RIGID SUPPLY RISERS. GRID STRAINER & ADJUSTABLE 'P'-TRAP.
3. MOUNT PER MANUFACTURERS INSTRUCTIONS FOR ADA COMPLIANCE.
4. OUTDOOR DUAL BASIN UNIT SHALL BE PROVIDED WITH 8" HOUSING WITHIN BUILDING INTERIOR TO PREVENT FREEZING OF WATER SUPPLY LINE AND CONNECTIONS.

MARK	DESCRIPTION	TRAP	PIPE SIZES				MOUNTING
			HW	CW	WP	VP	
P-4	ADA - DUAL BASIN ELECTRIC WATER COOLER	'P'-TRAP	-	1/2"	1-1/2"	1-1/2"	WALL MOUNTED

ADA - DUAL BASIN WATER COOLER

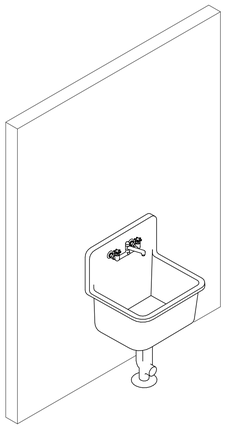

SPECIFICATIONS:
1. SERVICE SINK SHALL BE ENAMELED CAST IRON WITH STAINLESS STEEL RIM GUARD & DRILLED BACK FOR FAUCET.
2. EXPOSED YOKE, WALL MOUNT UTILITY FAUCET SHALL BE CAST BRASS BODY & SPOUT WITH BUCKET HOOK, METAL LEVER HANDLES WITH VACUUM BREAKER, STOP VALVES IN SHANKS, 1/4 TURN WASHERLESS CERAMIC DISC VALVE CARTRIDGES.
3. PROVIDE WHITE ENAMELED STANDARD TYPE CAST IRON TRAP.

MARK	DESCRIPTION	TRAP	PIPE SIZES				MOUNTING
			HW	CW	WP	VP	
P-5	WALL MOUNTED SERVICE SINK	STANDARD	1/2"	1/2"	3"	1-1/2"	WALL

SERVICE SINK

WALKER the GROUP ARCHITECTURE incorporated
PO BOX 541, NEW BERN, NC 28563
252-636-8778

NORTH CAROLINA PROFESSIONAL SEAL 058819 ENGINEER TIMOTHY N. HAHN

CRAVEN COMMUNITY COLLEGE- PUBLIC SAFETY TRAINING CENTER

525 Executive Pkwy
New Bern, NC 28562

BID DOCUMENTS

SCO # 24-27879-01A

Revisions

No.	Date

Project Number: 2407.SAFE
Date: 07/28/25
Drawn: Author
Checked: WAR
Scale: AS NOTED
Drawing Title

FIXTURE PLATES

Sheet Number
Of 157

Drawing Number
P-002

Pace COLLABORATIVE MECHANICAL ELECTRICAL ENGINEERS WWW.PACE-ENGINEERING.COM

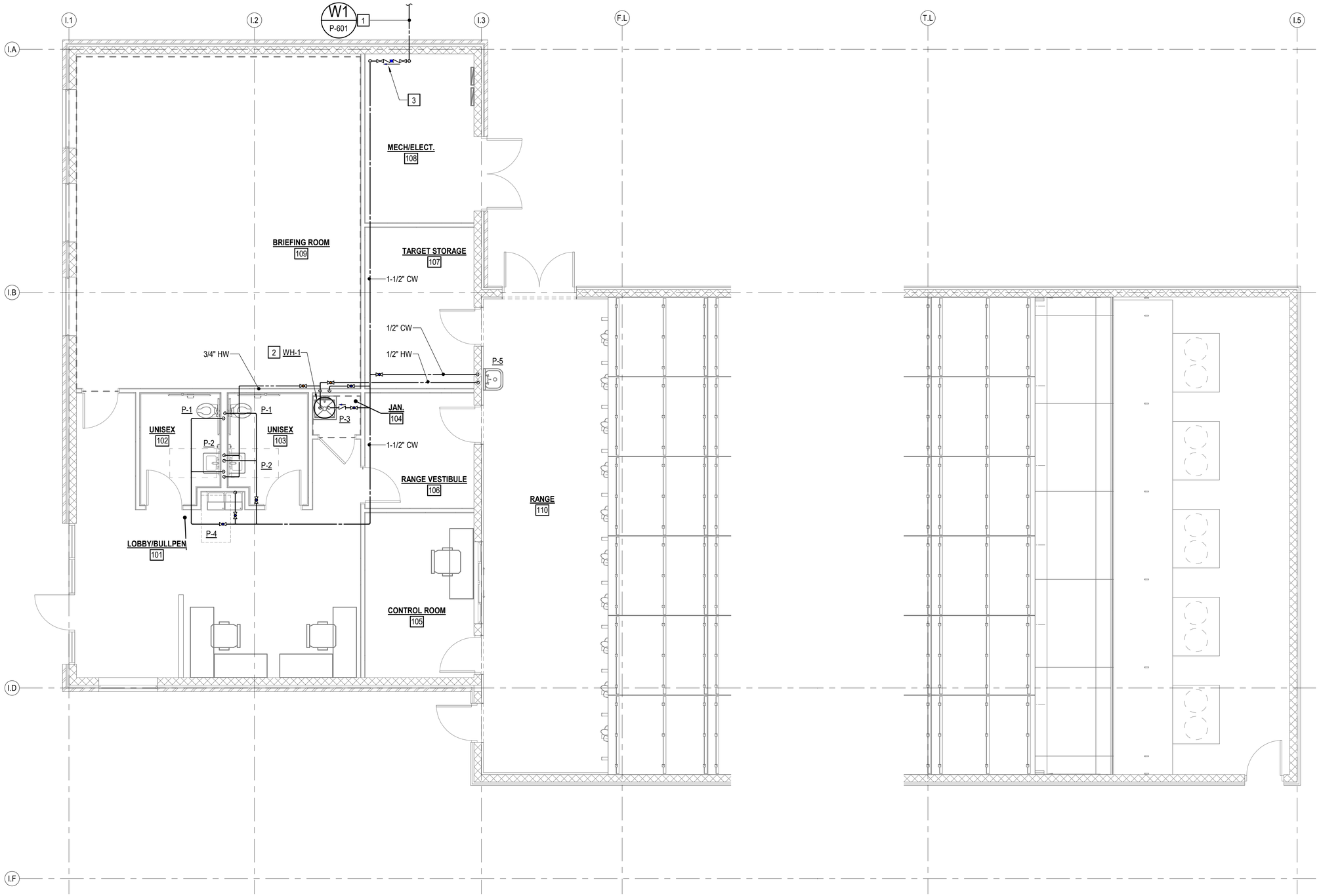

INDOOR RANGE DOMESTIC WATER PLAN

SCALE: 1/4" = 1'-0"

BID ALTERNATE NOTE:

REFER TO GI001 FOR BID ALTERNATE INFORMATION.

NOTES THIS SHEET

1. 1-1/2" CW SERVICE, SEE CIVIL DRAWINGS FOR CONTINUATION.
2. PROVIDE WALL MOUNTED WATER HEATER AT 5'-0" AFF MINIMUM. SEE DETAIL ON SHEET P-501.
3. PROVIDE 1-1/2" RPBP AT INDICATED LOCATION; SEE BACKFLOW PREVENTER INSTALLATION AND DISCHARGE DETAILS ON SHEET P-501.

PACE COLLABORATIVE
MECHANICAL ELECTRICAL ENGINEERS
WWW.PACE-ENGINEERING.COM

GRAPHIC SCALE(S)

1/4" = 1'-0" 5' 0' 5' 10'

WALKER the GROUP ARCHITECTURE incorporated
PO BOX 541, NEW BERN, NC 28563
252-636-8778

NORTH CAROLINA PROFESSIONAL SEAL 058819 ENGINEER TIMOTHY N. HAHN

CRAVEN COMMUNITY COLLEGE-PUBLIC SAFETY TRAINING CENTER

525 Executive Pkwy
New Bern, NC 28562

BID DOCUMENTS

SCO # 24-27879-01A

No.	Date	Revisions

Project Number: 2407.SAFE
Date: 07/28/25
Drawn: Author
Checked: WAR
Scale: AS NOTED

Drawing Title

INDOOR RANGE DOMESTIC WATER PLAN

Sheet Number
Of 157

Drawing Number

P-101

NOTES THIS SHEET

1. 1-1/2" CW SERVICE, SEE CIVIL DRAWINGS FOR CONTINUATION.
2. PROVIDE WALL MOUNTED WATER HEATER AT 5'-0" AFF MINIMUM. SEE DETAIL ON SHEET P-501.
3. ROUTE 1/2" CW DOWN TO ICE MAKER, SEE DETAIL ON SHEET P-501.
4. PROVIDE 1-1/2" RPBP AT INDICATED LOCATION; SEE BACKFLOW PREVENTER INSTALLATION AND DISCHARGE DETAILS ON SHEET P-501.
5. PROVIDE 1-1/2" CW SUPPLY WITH ISOLATION VALVE TO SERVE ADJACENT BATHROOM GROUP. SEE RISER DIAGRAM

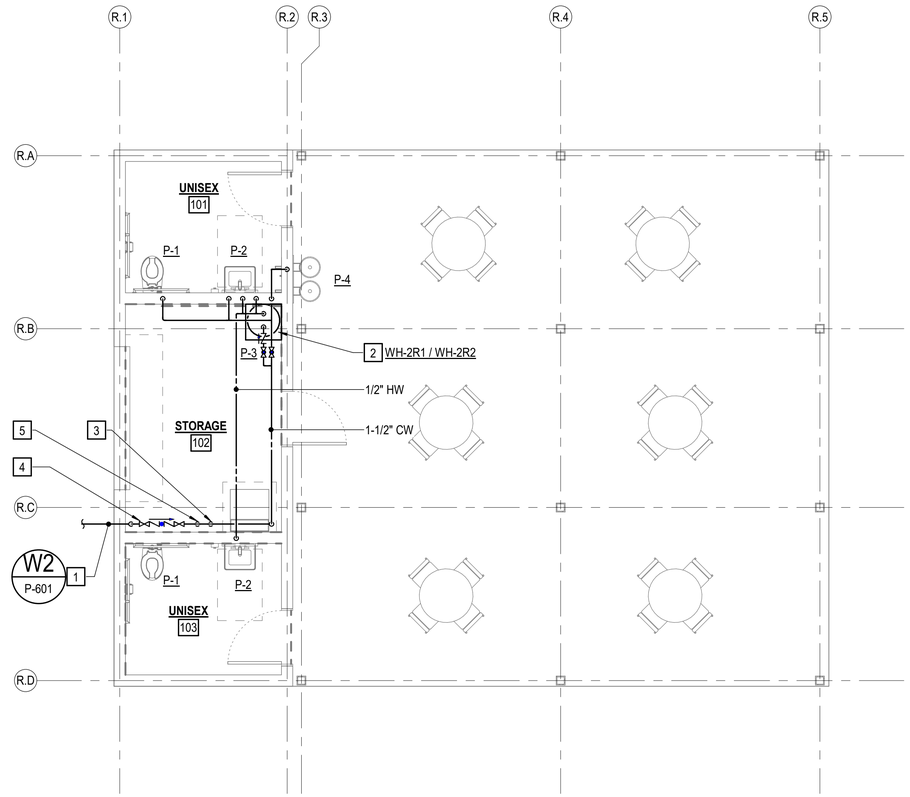

REHAB SHELTER DOMESTIC WATER PLAN

SCALE: 1/4" = 1'-0"

BID ALTERNATE NOTE:

REFER TO GI001 FOR BID ALTERNATE INFORMATION.

GRAPHIC SCALE(S)

1/4" = 1'-0" 5' 0' 5' 10'

WALKER the GROUP ARCHITECTURE incorporated
PO BOX 541, NEW BERN, NC 28563
252-636-8778

NORTH CAROLINA PROFESSIONAL SEAL 058819 ENGINEER TIMOTHY N. HAHN

CRAVEN COMMUNITY COLLEGE-PUBLIC SAFETY TRAINING CENTER

525 Executive Pkwy
New Bern, NC 28562

BID DOCUMENTS

SCO # 24-27879-01A

No.	Date	Revisions

Project Number: 2407.SAFE
Date: 07/28/25
Drawn: ADB
Checked: WAR
Scale: AS NOTED

Drawing Title

REHAB SHELTER DOMESTIC WATER PLAN

Sheet Number
Of 157

Drawing Number

P-102

PACE COLLABORATIVE
MECHANICAL ELECTRICAL ENGINEERS
WWW.PACE-ENGINEERING.COM

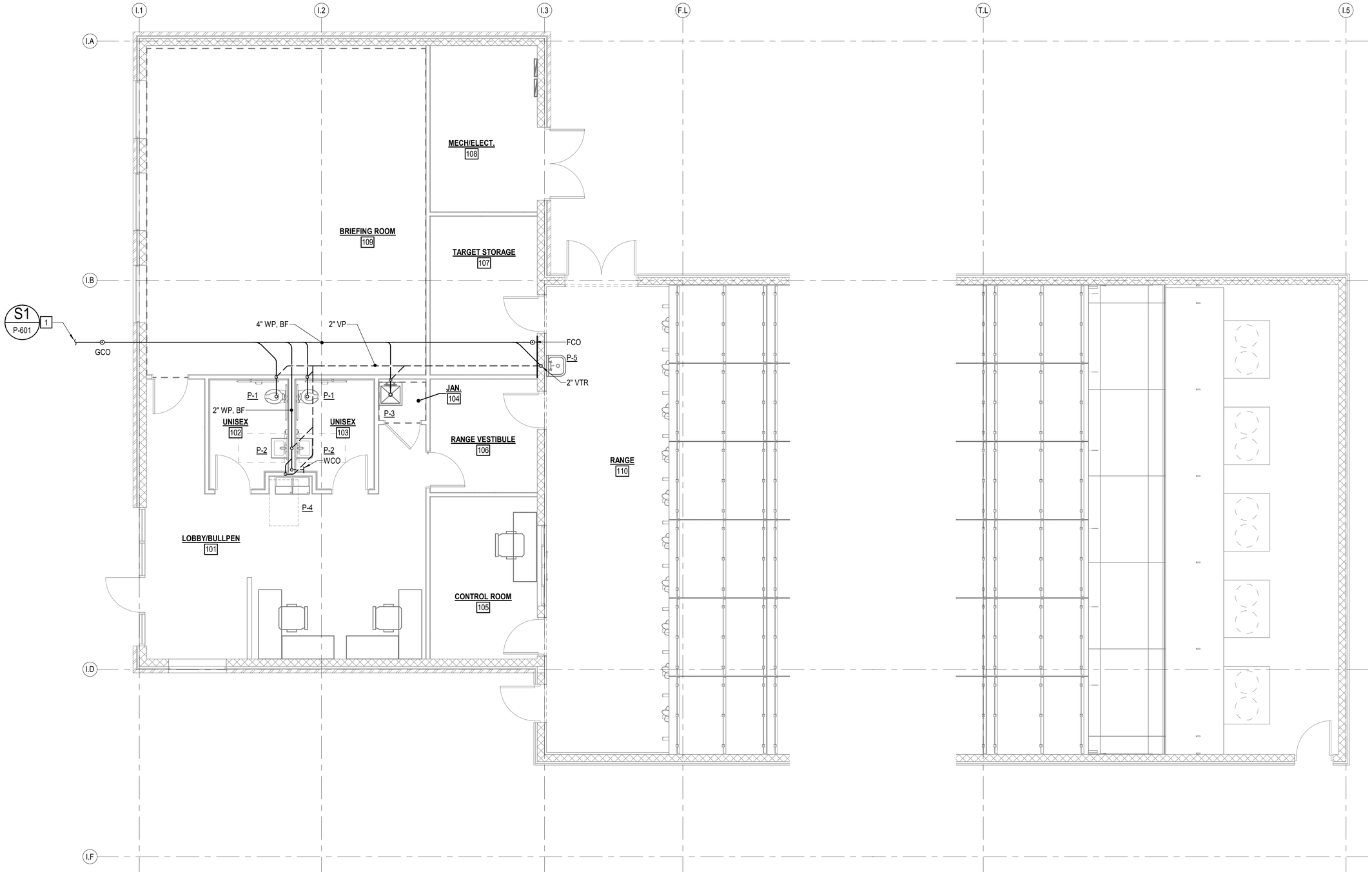

INDOOR RANGE SANITARY PLAN

SCALE: 1/4" = 1'-0"

BID ALTERNATE NOTE:

REFER TO GI001 FOR BID ALTERNATE INFORMATION.

NOTES THIS SHEET

1 4" WP, INV = 2.50' BFF; SEE CIVIL DRAWINGS FOR CONTINUATION.

GRAPHIC SCALE(S)

1/4" = 1'-0" 5' 0' 5' 10'

PACE COLLABORATIVE
MECHANICAL ELECTRICAL ENGINEERS
WWW.PACE-ENGINEERING.COM

WALKER the GROUP ARCHITECTURE incorporated
PO BOX 541, NEW BERN, NC 28563
252-636-8778

NORTH CAROLINA PROFESSIONAL SEAL 058819 ENGINEER TIMOTHY N. HAHN

CRAVEN COMMUNITY COLLEGE- PUBLIC SAFETY TRAINING CENTER

525 Executive Pkwy
New Bern, NC 28562

BID DOCUMENTS

SCO # 24-27879-01A

No.	Date	Revisions

Project Number: 2407.SAFE
Date: 07/28/25
Drawn: Author
Checked: WAR
Scale: AS NOTED
Drawing Title:

INDOOR RANGE SANITARY PLAN

Sheet Number
Of 157

Drawing Number
P-201

NOTES THIS SHEET

1. 4" WP, INV ELEV = 2.00 BFF; SEE CIVIL DRAWINGS FOR CONTINUATION.
2. ROUTE DRAIN FROM ICE MAKER TO ADJACENT FLOOR SINK.

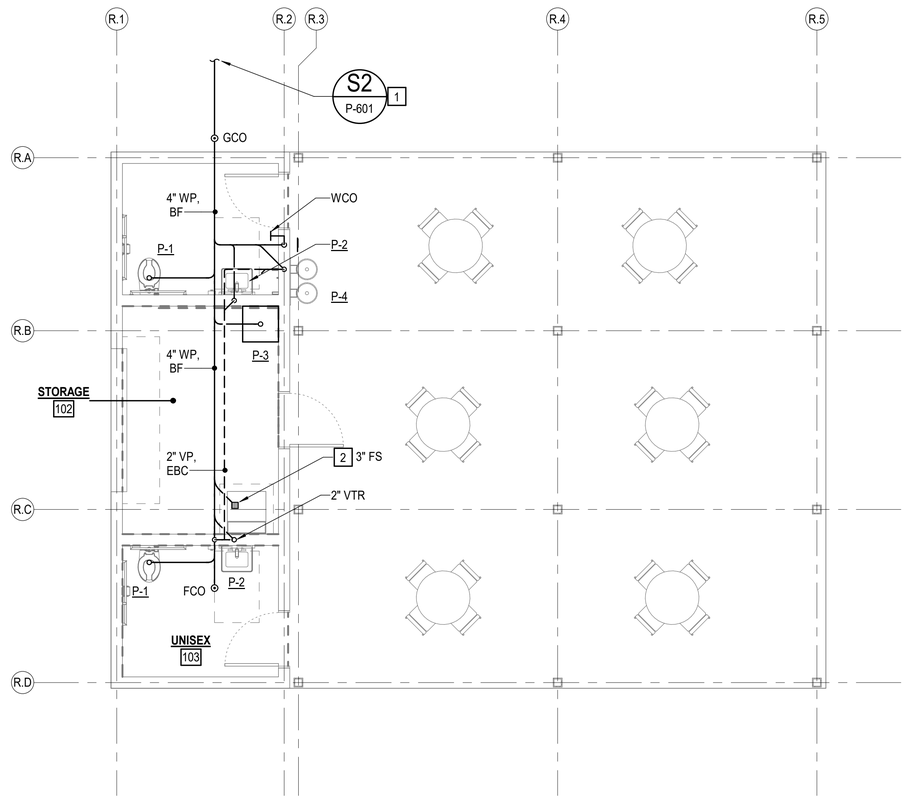

REHAB SHELTER SANITARY PLAN

SCALE: 1/4" = 1'-0"

BID ALTERNATE NOTE:

REFER TO GI001 FOR BID ALTERNATE INFORMATION.

GRAPHIC SCALE(S)

1/4" = 1'-0" 5' 0' 5' 10'

WALKER the GROUP ARCHITECTURE incorporated
PO BOX 541, NEW BERN, NC 28563
252-636-8778

NORTH CAROLINA PROFESSIONAL SEAL 058819 ENGINEER TIMOTHY N. HAHN

CRAVEN COMMUNITY COLLEGE- PUBLIC SAFETY TRAINING CENTER

525 Executive Pkwy
New Bern, NC 28562

BID DOCUMENTS

SCO # 24-27879-01A

No.	Date	Revisions

Project Number 2407.SAFE	Date 07/28/25
Drawn ADB	Checked WAR
Scale AS NOTED	

Drawing Title

REHAB SHELTER SANITARY PLAN

Sheet Number
Of 157

Drawing Number

P-202

Pace COLLABORATIVE MECHANICAL ELECTRICAL ENGINEERS WWW.PACE-ENGINEERING.COM

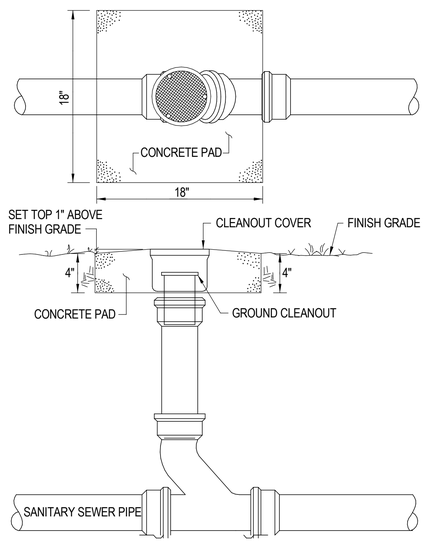

GRADE CLEANOUT DETAIL
NO SCALE

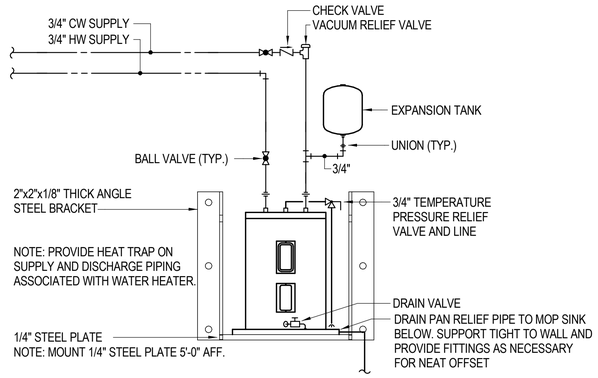

WALL MOUNTED WATER HEATER DETAIL
NO SCALE

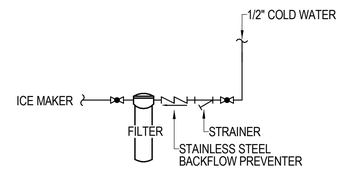

ICE MAKER PIPING DETAIL
NO SCALE

BACKFLOW PREVENTER SIZE, INCHES	DESIGN DISCHARGE RATE, GPM	RISER PIPE "X" SIZE, INCHES	RISER PIPE "Y" SIZE, INCHES
3/4"	30	4"	2"
1"	50	6"	3"
1 1/2"	100	8"	4"
2"	160	8"	4"
3"	320	10"	6"

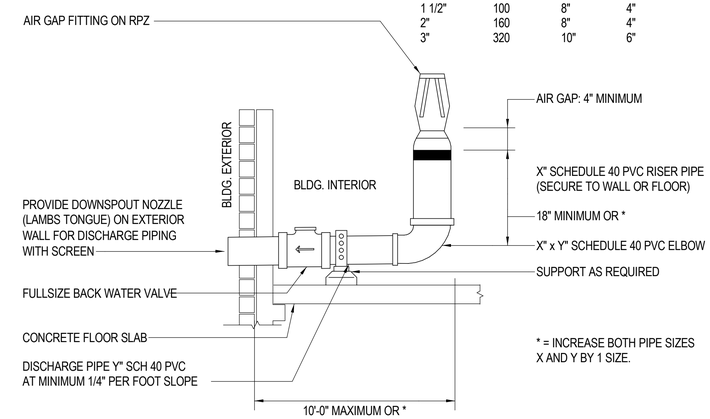

BACKFLOW PREVENTER DISCHARGE DETAIL
NO SCALE

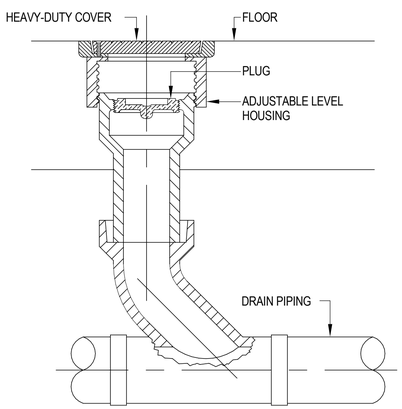

FLOOR CLEANOUT DETAIL
NO SCALE

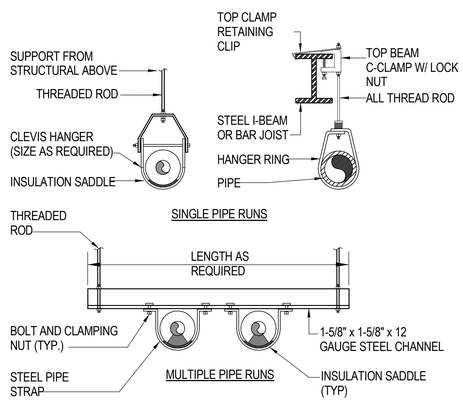

PIPE SUPPORT DETAILS
NO SCALE

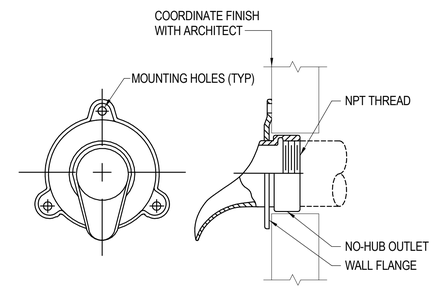

DETAIL BASED ON "JAY R. SMITH", MODEL 1771
INSTALL PER MANUFACTURER'S INSTRUCTIONS

DOWNSPOUT NOZZLE DETAIL
NO SCALE

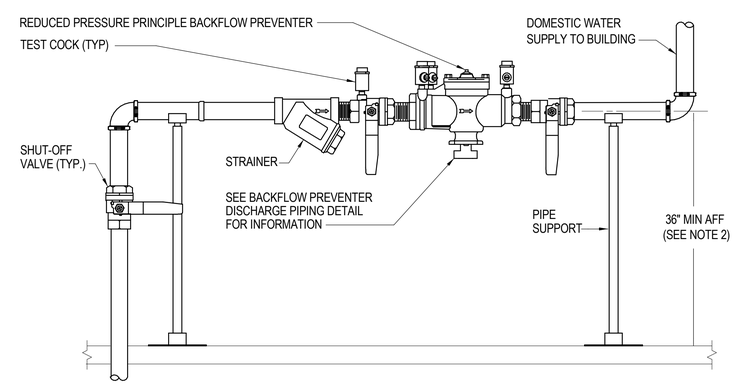

NOTES:
1. NO DEVICES OR BRANCH LINES, ETC. SHALL BE INSTALLED BETWEEN BACKFLOW PREVENTER ASSEMBLY AND THE MAIN WATER LINE PROVIDE ISOLATION VALVE AND STRAINER.
2. VERIFY DISCHARGE PIPE LENGTH AND SLOPE BEFORE COORDINATING FINAL BACKFLOW PREVENTER HEIGHT TO ENSURE PROPER FIT OF ALL COMPONENTS. PER SECTION 608.15 OF THE 2021 VPC, MOUNTING HEIGHT SHALL BE BETWEEN 12" AND 60" ABOVE GRADE, IF MANUFACTURER'S LISTED INSTALLATION HEIGHT CONFLICTS WITH THIS REQUIREMENT, THE MANUFACTURER'S LISTED HEIGHT SHALL APPLY.

BACKFLOW PREVENTER INSTALLATION DETAIL
NO SCALE

WALKER the GROUP ARCHITECTURE incorporated
PO BOX 541, NEW BERN, NC 28563
252-636-8778

NORTH CAROLINA PROFESSIONAL SEAL 058819 ENGINEER TIMOTHY N. HAHN

CRAVEN COMMUNITY COLLEGE-PUBLIC SAFETY TRAINING CENTER

525 Executive Pkwy
New Bern, NC 28562

BID DOCUMENTS

SCO # 24-27879-01A

Revisions

No.	Date

Project Number: 2407.SAFE
Date: 07/28/25
Drawn: ADB
Checked: WAR
Scale: AS NOTED
Drawing Title: **DETAILS**

Sheet Number
Of 157

Drawing Number
P-501

Pace COLLABORATIVE
MECHANICAL ELECTRICAL ENGINEERS
WWW.PACE-ENGINEERING.COM

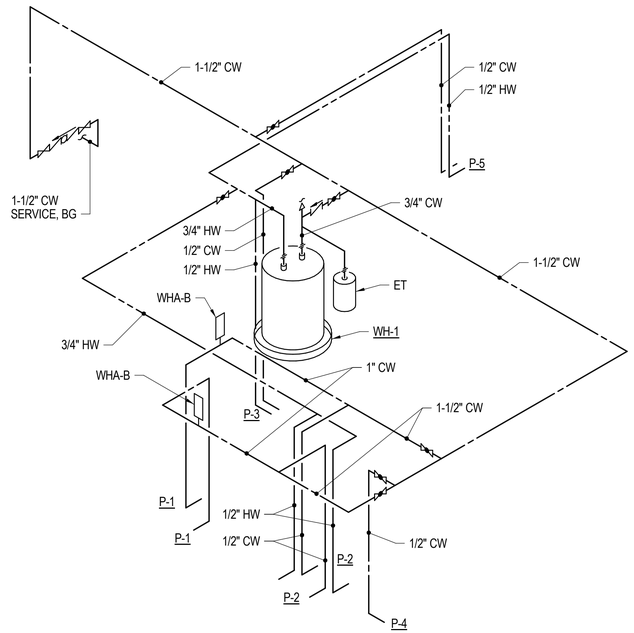

W1 P-101 INDOOR RANGE DOMESTIC WATER RISER DIAGRAM
NO SCALE

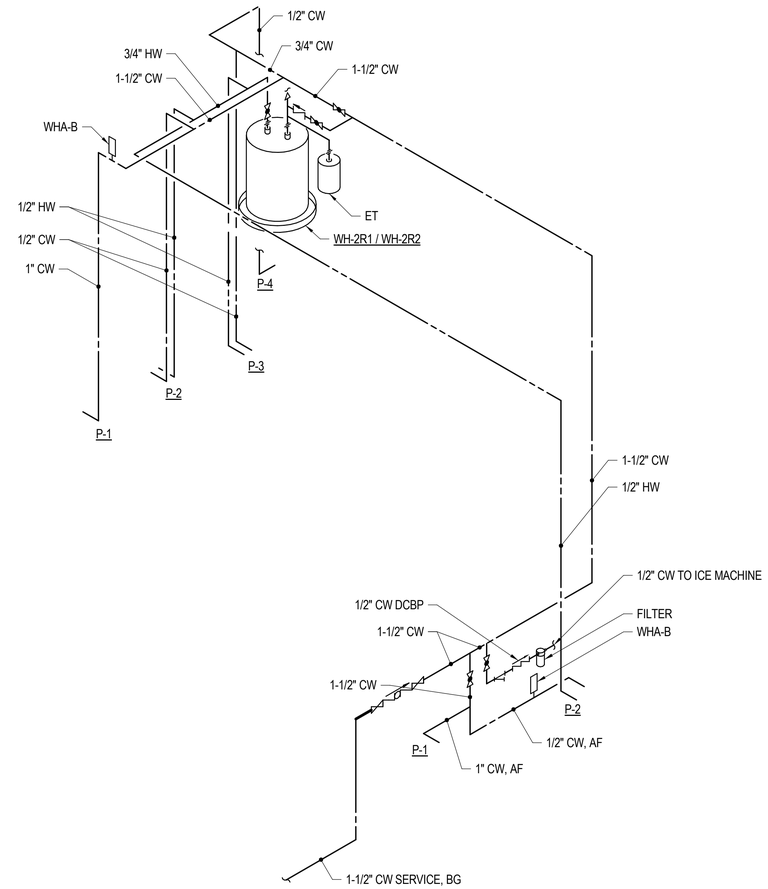

W2 P-102 REHAB SHELTER DOMESTIC WATER RISER DIAGRAM
NO SCALE

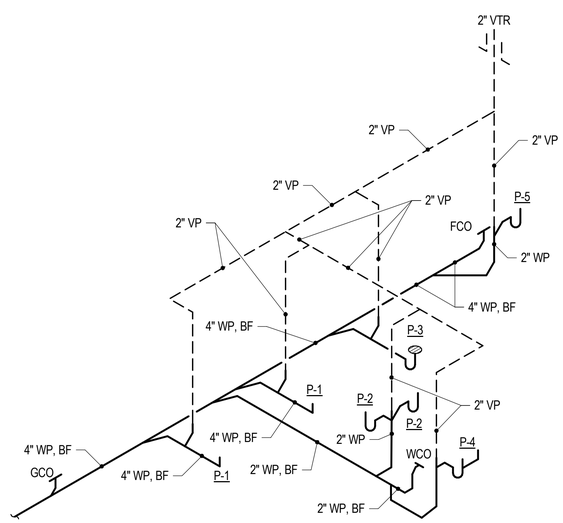

S1 P-201 INDOOR RANGE SANITARY RISER DIAGRAM
NO SCALE

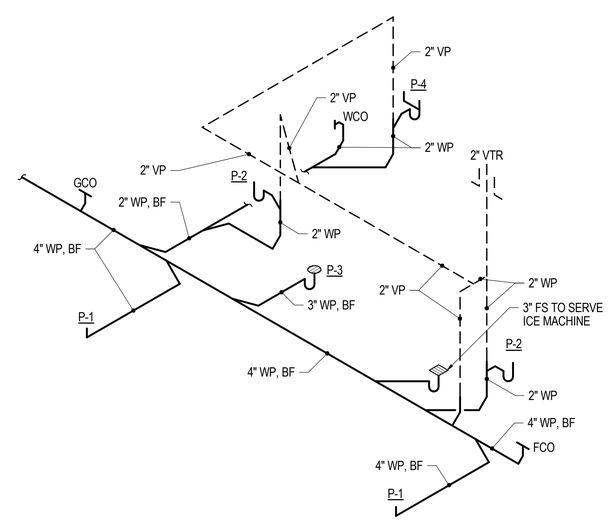

S2 P-202 REHAB SHELTER SANITARY RISER DIAGRAM
NO SCALE

WALKER the GROUP ARCHITECTURE incorporated
PO BOX 541, NEW BERN, NC 28563
252-636-8778

NORTH CAROLINA PROFESSIONAL SEAL 058819 ENGINEER TIMOTHY N. HAHN

CRAVEN COMMUNITY COLLEGE- PUBLIC SAFETY TRAINING CENTER

525 Executive Pkwy
New Bern, NC 28562

BID DOCUMENTS

SCO # 24-27879-01A

No.	Date	Revisions

Project Number: 2407.SAFE
Date: 07/28/25
Drawn: Author
Checked: WAR
Scale: AS NOTED
Drawing Title:

RISER DIAGRAM

Sheet Number
Of 157

Drawing Number
P-601

PACE COLLABORATIVE
MECHANICAL ELECTRICAL ENGINEERS
WWW.PACE-ENGINEERING.COM

GENERAL NOTES

GENERAL ITEMS

GENERAL NOTES ON THIS DRAWING ARE APPLICABLE TO EACH HVAC DRAWING OF THIS SET. SEE EACH DRAWING FOR SPECIFIC NOTES APPLICABLE TO THAT DRAWING.

COORDINATE THAT OUTSIDE AIR INTAKE OPENINGS FOR VENTILATION AIR ARE LOCATED AT LEAST 10 FEET MEASURED IN ANY DIRECTION FROM ANY HAZARDOUS OR NOXIOUS CONTAMINANT SOURCE SUCH AS FLUES, VENTS, CHIMNEYS, GAS METERS, GAS REGULATORS, PLUMBING VENTS, ETC., UNLESS TOP OF SUCH INTAKE OPENING IS 3 FEET OR GREATER BELOW ANY OF THE LISTED ITEMS.

OVERHEAD PIPING IN SPACES WITHOUT HUNG CEILINGS SHALL BE RUN AS CLOSE TO ROOF DECK AS PRACTICAL, AS CLOSE TO PARALLEL JOISTS AS POSSIBLE AND ABOVE LIGHTING FIXTURES TO CONCEAL PIPING.

OVERHEAD DUCTWORK AND PIPING IN SPACES WITH CEILINGS SHALL BE CONCEALED UNLESS OTHERWISE NOTED.

PROVIDE PIPE SLEEVES LARGE ENOUGH TO ALLOW FOR REQUIRED LATERAL MOVEMENT OF PIPING.

COORDINATE LOCATION OF GRILLES, REGISTERS, DIFFUSERS, THERMOSTATS AND OTHER WALL OR CEILING MOUNTED HVAC ACCESSORIES WITH REFLECTED CEILING PLAN, LIGHTING FIXTURE LAYOUT AND ACCESSORIES INSTALLED BY OTHER TRADES SO AS TO PRESENT A NEAT AND ATTRACTIVE INSTALLATION THROUGHOUT THE ENTIRE BUILDING. IT IS THE INTENT FOR GRILLES, REGISTERS AND DIFFUSERS TO BE INSTALLED IN THE CENTER OF CEILING PANELS.

EQUIPMENT ON THE ROOF SHALL BE INSTALLED SO AT LEAST 10 FEET OF CLEARANCE SHALL BE MAINTAINED BETWEEN EQUIPMENT AND THE ROOF EDGE.

THE DIAMETER OF THE SUPPLY PIPE AT ANY GAS FIRED EQUIPMENT SHALL NOT BE OF A SMALLER SIZE THAN THE INLET CONNECTION TO THE EQUIPMENT.

ARRANGE PIPING AND DUCTWORK, PARTICULARLY ABOVE CEILING AS REQUIRED TO CLEAR STRUCTURE, DUCTS, CONDUITS, ETC. ALLOWING SPACE FOR PIPE HANGERS, EXPANSION LOOPS AND ACCESS TO VALVES, FILTERS, AND MAINTENANCE OF EQUIPMENT.

CONTRACTOR SHALL VERIFY REQUIRED REFRIGERANT PIPE SIZES AND QUANTITIES WITH EQUIPMENT MANUFACTURER FOR THE INDICATED INSTALLATION.

COORDINATE LOCATION AND INSTALLATION OF EQUIPMENT WITH OTHER TRADES.

DO NOT SCALE DRAWINGS. SEE ARCHITECTURAL DRAWINGS FOR LOCATIONS OF DOORS, WINDOWS, ETC.

THERMOSTATS AND SENSORS SHALL BE LOCATED IN THE ROOMS INDICATED. INSTALL AT APPROX. 46" ABOVE FINISH FLOOR TO MATCH THE HEIGHT OF WALL SWITCHES OR OTHER WALL MOUNTED DEVICES.

PIPING, DUCTWORK, VENTS, ETC., EXTENDING THROUGH EXTERIOR WALLS AND ROOF SHALL BE FLASHED AND COUNTER FLASHED IN A WEATHERPROOF MANNER.

VALVES AND SPECIALTIES SHALL BE LINE SIZE EXCEPT FOR CONTROL VALVES OR UNLESS NOTED OTHERWISE.

EXTEND DRAIN LINES AS INDICATED. ROUTING SHALL NOT INTERFERE WITH PASSAGEWAYS AND MAINTENANCE. DRAINS FROM AIR CONDITIONING CONDENSATE DRAIN PANS SHALL BE TRAPPED. SLOPE CONDENSATE DRAIN PIPING AT 1/4" PER FOOT. VERIFY INVERT IS ESTABLISHED AFTER AIR HANDLING UNIT IS INSTALLED BUT PRIOR TO DUCTWORK INSTALLATION.

INDOOR MECHANICAL EQUIPMENT CONTAINING AIR CONDITIONING COILS SHALL BE OUTFITTED WITH A MOISTURE SENSOR LOCATED IN THE DRAIN P-TRAP. THE SENSOR SHALL BE WIRED TO DE-ENERGIZE THE EQUIPMENT IF WATER RISES ABOVE THE DRAIN OUTLET.

ROOFTOP UNITS CONTAINING AIR CONDITIONING COILS SHALL BE OUTFITTED WITH A MOISTURE SENSOR IN THE PRIMARY DRAIN PAN. THE SENSOR SHALL BE WIRED TO DE-ENERGIZE THE EQUIPMENT IF WATER IS SENSED IN THE DRAIN PAN. INDOOR MECHANICAL EQUIPMENT CONTAINING AIR CONDITIONING COILS SHALL BE OUTFITTED WITH A MOISTURE SENSOR LOCATED IN THE DRAIN P-TRAP. THE SENSOR SHALL BE WIRED TO DE-ENERGIZE THE EQUIPMENT IF WATER RISES ABOVE THE DRAIN OUTLET.

PIPING AND DUCTWORK INSULATION SHALL BE RUN CONTINUOUSLY THROUGH NON-RATED FLOORS, WALLS, ROOF AND PARTITIONS, UNLESS OTHERWISE INDICATED.

NO PIPING SHALL BE SMALLER THAN 3/4" UNLESS OTHERWISE NOTED.

PIPING SHALL BE SUPPORTED IN ACCORDANCE WITH THE SPECIFICATIONS. ADDITIONAL SUPPORTS OR HANGERS SHALL BE ADJACENT TO ELBOWS, TO PREVENT WEIGHT OF PIPING BEING PLACED ON THE EQUIPMENT.

CORRECT SETTING ON BALANCING FITTINGS SHALL BE PERMANENTLY MARKED.

LOCATE AND SIZE CONCRETE PADS AND CURBS FOR MECHANICAL EQUIPMENT IN ACCORDANCE WITH ACTUAL EQUIPMENT PURCHASED.

FOR LOCATION OF MOTOR STARTERS, SEE ELECTRICAL DRAWINGS.

SHEET METAL

PROVIDE A MINIMUM OF THREE TIMES THE FAN DIAMETER OF STRAIGHT DUCTWORK OFF THE SUPPLY AIR FAN DISCHARGE BEFORE ANY TAKEOFFS OR ELBOWS.

DUCTWORK SHALL BE CONSTRUCTED TO THE SMACNA STATIC PRESSURE CLASSIFICATION OF 2 IN. WG AND SEAL CLASS "A".

MAINTENANCE

EQUIPMENT WITH FILTERS SHALL BE INSTALLED SO THAT FILTERS CAN BE EASILY REMOVED AND REPLACED.

EQUIPMENT INSTALLED ABOVE CEILINGS SHALL BE MOUNTED APPROX. 12" ABOVE CEILING (UON) FOR MAINTENANCE ACCESS.

INSTALL PIPE RUNS AT LEAST 6" ABOVE CEILING TILES. WHERE PRACTICAL INSTALL VALVES, AND OTHER MAINTAINABLE DEVICES LOW ENOUGH TO REACH WITH A 6' LADDER.

PROVIDE ACCESS TO ANY INSPECTION OR MAINTAINABLE DEVICE, EQUIPMENT, ETC. - ACCESS OR ACCESS DOOR SHALL BE OF ADEQUATE SIZE TO WORK ON DEVICE.

EXAMINE MANUFACTURER'S LITERATURE TO DETERMINE RECOMMENDED CLEARANCES. THESE CLEARANCES, IN ADDITION TO MINIMUM CLEARANCES REQUIRED BY THE NATIONAL ELECTRICAL CODE, SHALL BE ESTABLISHED AND MAINTAINED. THE CONTRACTOR SHALL BE RESPONSIBLE FOR COORDINATING THESE REQUIREMENTS WITH ALL OTHER TRADES.

INTERDISCIPLINARY COORDINATION

IF THIS CONTRACTOR SHOULD ELECT TO PROPOSE ANY EQUIPMENT THAT HAS DIFFERENT PHYSICAL OR ELECTRICAL CHARACTERISTICS, ETC. WHEN COMPARED TO THE BASIS OF DESIGN EQUIPMENT, THIS CONTRACTOR IS RESPONSIBLE FOR COORDINATING THESE CHANGES WITH THE OTHER TRADES PRIOR TO BID AND AGAIN AFTER ORDERING OF EQUIPMENT. IF THERE SHOULD BE ANY ADDITIONAL WORK INCURRED BY THE OTHER TRADES AS A RESULT OF THIS CONTRACTOR'S EQUIPMENT SELECTION, ALL COSTS ASSOCIATED WITH THE ADDITIONAL WORK SHALL BE BORNE BY THIS CONTRACTOR.

TESTING, ADJUSTING, AND BALANCING (TAB)

AIRSIDE AND WATERSIDE TAB SHALL BE PERFORMED ON ALL DUCTED AND NON-DUCTED HVAC SYSTEMS. NON-DUCT HVAC SYSTEMS, INCLUDE, BUT ARE NOT LIMITED TO, UNIT HEATERS, CABINET UNIT HEATERS, BASEBOARD HEATERS, DUCTLESS MINI-SPLITS, DESTRATIFICATION FANS, LARGE CEILING FANS, INFRARED SPACE HEATERS, AIR CURTAINS, ETC. IT SHALL BE THE RESPONSIBILITY OF THE TAB CONTRACTOR TO DETERMINE APPROPRIATE TESTING, ADJUSTING AND BALANCING PROCEDURES FOR SYSTEMS NOT LISTED BY THE PROCEDURAL STANDARDS CERTIFYING BODY (NEBB, AABC, ETC.).

APPLICABLE CODES

2018 NORTH CAROLINA ENERGY CONSERVATION CODE
2018 NORTH CAROLINA FUEL GAS CODE
2018 NORTH CAROLINA MECHANICAL CODE

LEGENDS AND ABBREVIATIONS

1	WORK NOTE DESIGNATION
	DETAIL/RISER/ENLARGED PLAN
	SHEET WHERE SHOWN/CUT
BF-1	BARREL FAN DESIGNATION
DSS-1	DUCTLESS SPLIT SYSTEM DESIGNATION
EF-1	EXHAUST FAN DESIGNATION
EUH-1	ELECTRIC UNIT HEATER DESIGNATION
GUH-1	GAS FIRED UNIT HEATER DESIGNATION
HP-1	HEAT PUMP DESIGNATION
L-1	LOUVER DESIGNATION
RTU-1	ROOFTOP UNIT DESIGNATION
FS	FAN SWITCH
TC	TIME CLOCK
T	WALL THERMOSTAT/TEMPERATURE SENSOR
TH	WALL TEMPERATURE/HUMIDITY SENSOR
BDD	BACKDRAFT DAMPER
	VOLUME DAMPER
X / XXX	GRILLE, REGISTER, OR DIFFUSER MARK (CFM AS INDICATED)
	SUPPLY AIR/OUTSIDE AIR DUCT SECTION
	RETURN AIR DUCT SECTION
	EXHAUST AIR DUCT SECTION
	SUPPLY AIR/OUTSIDE AIR DUCT SECTION THROUGH ROOF
	RETURN AIR DUCT SECTION THROUGH ROOF
	EXHAUST AIR DUCT SECTION THROUGH ROOF
	DUCT TURNING UP
	DUCT TURNING DOWN
	CEILING DIFFUSER WITH FLEXIBLE DUCTWORK
	RETURN REGISTER WITH DUCTWORK
	EXHAUST GRILLE WITH DUCTWORK
	MITERED ELBOW WITH TURNING VANES
	FLEXIBLE DUCT CONNECTOR
	PIPE TURNING UP
	PIPE TURNING DOWN
	PIPE CAPPED
	PLUG VALVE
	GAS REGULATOR/STEAM TRAP
	UNION
D	CONDENSATE DRAIN PIPING
G	NATURAL GAS PIPING
RL	REFRIGERANT LIQUID PIPING
RS	REFRIGERANT SUCTION PIPING

APPROX	APPROXIMATELY
CFH	CUBIC FEET PER HOUR
CFM	CUBIC FEET PER MINUTE
COP	COEFFICIENT OF PERFORMANCE
EA	EXHAUST AIR
EDB	ENTERING DRY BULB TEMPERATURE
EWB	ENTERING WET BULB TEMPERATURE
ESP	EXTERNAL STATIC PRESSURE
FT	FEET
HP	HORSEPOWER
IN	INCH
LBS	POUNDS
LDB	LEAVING DRY BULB TEMPERATURE
LWB	LEAVING WET BULB TEMPERATURE
MAX	MAXIMUM
MBH	1000 BRITISH THERMAL UNITS PER HOUR
MCA	MINIMUM CIRCUIT AMPS
MIN	MINIMUM
MOCP	MAXIMUM OVERCURRENT PROTECTION
NC	NOISE CRITERIA
OA	OUTSIDE AIR
OED	OPEN ENDED DUCT
PSIG	POUND PER SQUARE INCH GAUGE
RA	RETURN AIR
SA	SUPPLY AIR
SENS	SENSIBLE
SF	SQUARE FEET
TYP	TYPICAL
UON	UNLESS OTHERWISE NOTED
V	VOLTS
W	WATT
WG	WATER GAUGE
WMS	WIRE MESH SCREEN
°F	DEGREE FAHRENHEIT
Ø	PHASE/DIAMETER

WALKER the GROUP ARCHITECTURE incorporated
PO BOX 541, NEW BERN, NC 28563
252-636-8778

NORTH CAROLINA PROFESSIONAL SEAL 058819 ENGINEER TIMOTHY N. HAHN

CRAVEN COMMUNITY COLLEGE-PUBLIC SAFETY TRAINING CENTER

525 Executive Pkwy
New Bern, NC 28562

BID DOCUMENTS

SCO # 24-27879-01A

Revisions

No.	Date

Project Number: 2407.SAFE
Date: 07/28/25
Drawn: MTF
Checked: ETS
Scale: AS NOTED
Drawing Title

LEGEND, NOTES AND ABBREVIATIONS

Sheet Number
Of 34

Drawing Number
M-001

Pace COLLABORATIVE MECHANICAL ELECTRICAL ENGINEERS WWW.PACE-ENGINEERING.COM

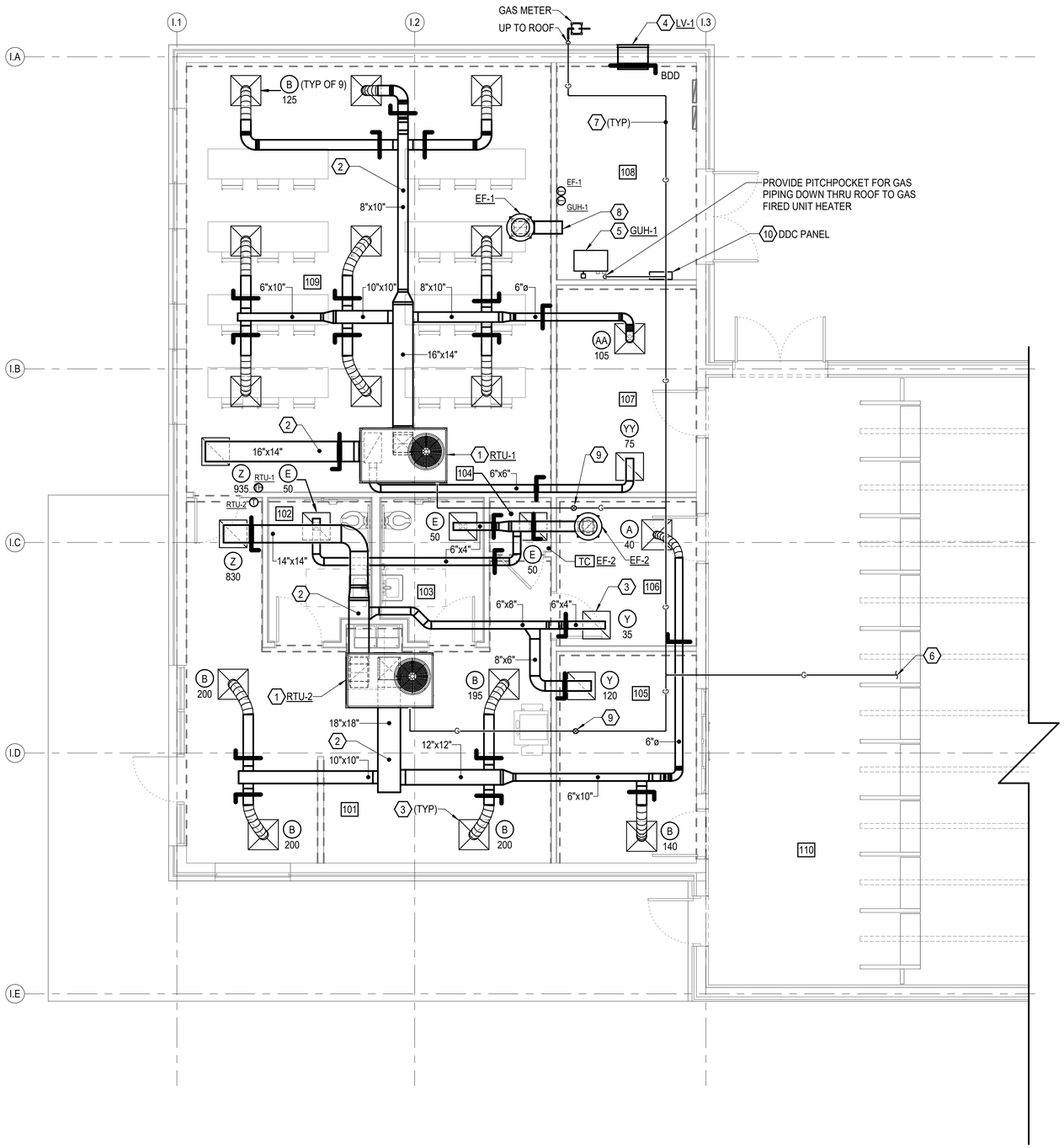

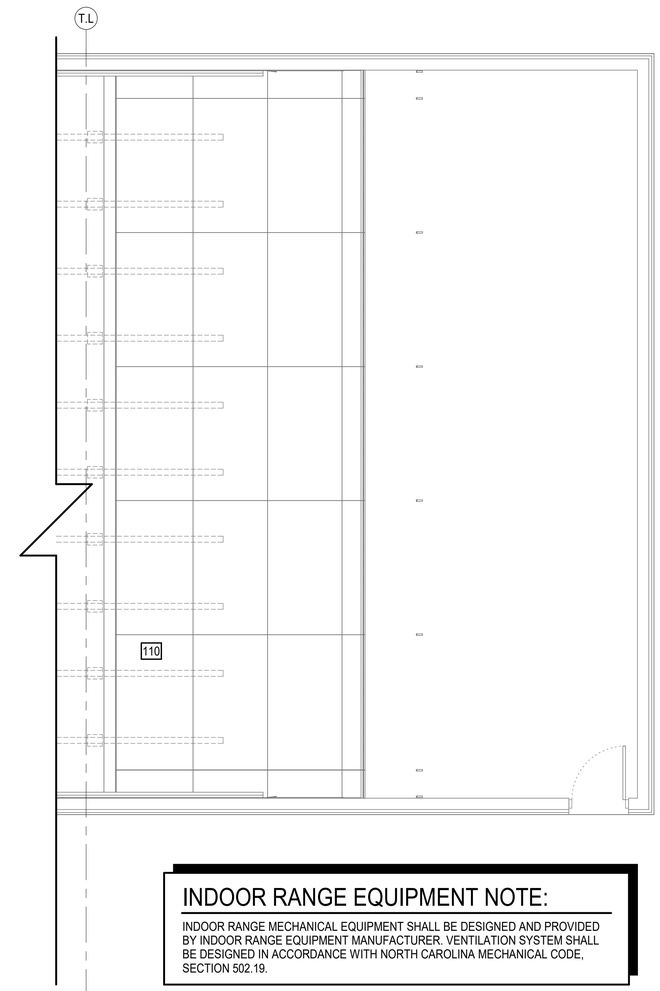

1ST FLOOR ROOM SCHEDULE

ROOM #	ROOM NAME
101	LOBBY/BULLPEN
102	UNISEX
103	UNISEX
104	JAN.
105	CONTROL ROOM
106	RANGE VESTIBULE
107	TARGET STORAGE
108	MECH/ELECT.
109	BRIEFING ROOM
110	RANGE

NOTES THIS SHEET

1. PROVIDE ROOFTOP UNIT, CURB, AND ALL ASSOCIATED APPURTENANCES COMPLETE. PROVIDE CONDENSATE PIPING, TRAP, AND SPILL ON ROOF.
2. PROVIDE DUCTWORK, INSULATION, HANGERS, AND SUPPORTS COMPLETE.
3. PROVIDE DIFFUSER/GRILL AND ALL ASSOCIATED APPURTENANCES COMPLETE.
4. PROVIDE LOUVER COMPLETE.
5. PROVIDE UNIT HEATER, VENT PIPING, COMBUSTION PIPING, HANGERS, AND SUPPORTS COMPLETE. TERMINATE AT ROOF WITH CONCENTRIC VENT IN ACCORDANCE WITH MANUFACTURER'S INSTRUCTIONS.
6. CONNECT GAS PIPING TO STATE INDOOR RANGE EQUIPMENT MANUFACTURER. COORDINATE WITH GENERAL CONTRACTOR EXACT ROUTING.
7. PROVIDE GAS PIPING ON ROOF AND ROOF SUPPORTS COMPLETE. ROOF SUPPORTS SHALL BE 5'-0" ON CENTER.
8. PROVIDE OPEN ENDED DUCT WITH WIRE MESH SCREEN.
9. PROVIDE GAS REGULATOR AND LOCATE MINIMUM 10'-0" AWAY FROM RTU OUTSIDE AIR INTAKE. PIPING DOWNSTREAM SHALL BE NO LESS THAN THE EQUIPMENT CONNECTION SIZE.
10. PROVIDE DDC CONTROL PANEL COMPLETE.

INDOOR RANGE EQUIPMENT NOTE:

INDOOR RANGE MECHANICAL EQUIPMENT SHALL BE DESIGNED AND PROVIDED BY INDOOR RANGE EQUIPMENT MANUFACTURER. VENTILATION SYSTEM SHALL BE DESIGNED IN ACCORDANCE WITH NORTH CAROLINA MECHANICAL CODE, SECTION 502.19.

INDOOR RANGE FLOOR PLAN

SCALE: 1/4" = 1'-0"

GRAPHIC SCALE(S)

1/4" = 1'-0" 5' 0' 5' 10'

WALKER the GROUP ARCHITECTURE incorporated
PO BOX 541, NEW BERN, NC 28563
252-636-8778

NORTH CAROLINA PROFESSIONAL SEAL 058819 ENGINEER TIMOTHY N. HAHN

CRAVEN COMMUNITY COLLEGE-PUBLIC SAFETY TRAINING CENTER

525 Executive Pkwy
New Bern, NC 28562

BID DOCUMENTS

SCO # 24-27879-01A

No.	Date	Revisions

Project Number: 2407.SAFE
Date: 07/28/25
Drawn: MTF
Checked: ETS
Scale: AS NOTED

Drawing Title

INDOOR RANGE FLOOR PLAN

Sheet Number
Of 34

Drawing Number

M-101

PACE COLLABORATIVE MECHANICAL ELECTRICAL ENGINEERS WWW.PACE-ENGINEERING.COM

NOTES THIS SHEET

1. PROVIDE HEATER AND SUPPORTS COMPLETE. MOUNT TOP OF HEATER 4" BELOW CEILING.
2. PROVIDE EXHAUST FAN, DUCTWORK, HANGERS, SUPPORTS, AND MANUFACTURER'S APPROVED WALL CAP COMPLETE.
3. PROVIDE FAN AND WALL MOUNT COMPLETE. MOUNT BOTTOM OF FAN 9'-0" ABOVE FINISHED FLOOR.
4. PROVIDE DUCTLESS SPLIT SYSTEM INDOOR UNIT, HANGERS, AND SUPPORTS COMPLETE. MOUNT 8'-0" ABOVE FINISHED FLOOR.
5. PROVIDE DUCTLESS SPLIT SYSTEM OUTDOOR UNIT, CONCRETE CURB,AND ASSOCIATED APPURTENANCES COMPLETE.
6. PROVIDE REFRIGERANT PIPING, INSULATION, JACKETING, HANGERS, AND SUPPORTS COMPLETE.
7. PROVIDE CONDENSATE DRAIN PIPING, INSULATION, HANGERS, AND SUPPORTS. TERMINATE 6" ABOVE SPLASHBLOCK.

REHAB SHELTER EQUIPMENT NOTE:

EQUIPMENT SHOWN WITHIN THIS REHAB SHELTER SHALL ALSO BE INSTALLED WITHIN THE SECOND REHAB SHELTER NOT SHOWN ON DRAWINGS. EQUIPMENT TAGS SHALL BE UNIQUE FOR EACH BUILDING, REFER TO SCHEDULES ON SHEET M-601 FOR EQUIPMENT TAGS AND TOTAL EQUIPMENT COUNT.

BID ALTERNATE NOTE:

REFER TO GI001 FOR BID ALTERNATE INFORMATION.

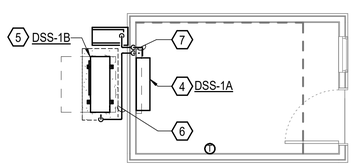

GATEHOUSE MECHANICAL PLAN
SCALE: 1/4" = 1'-0"

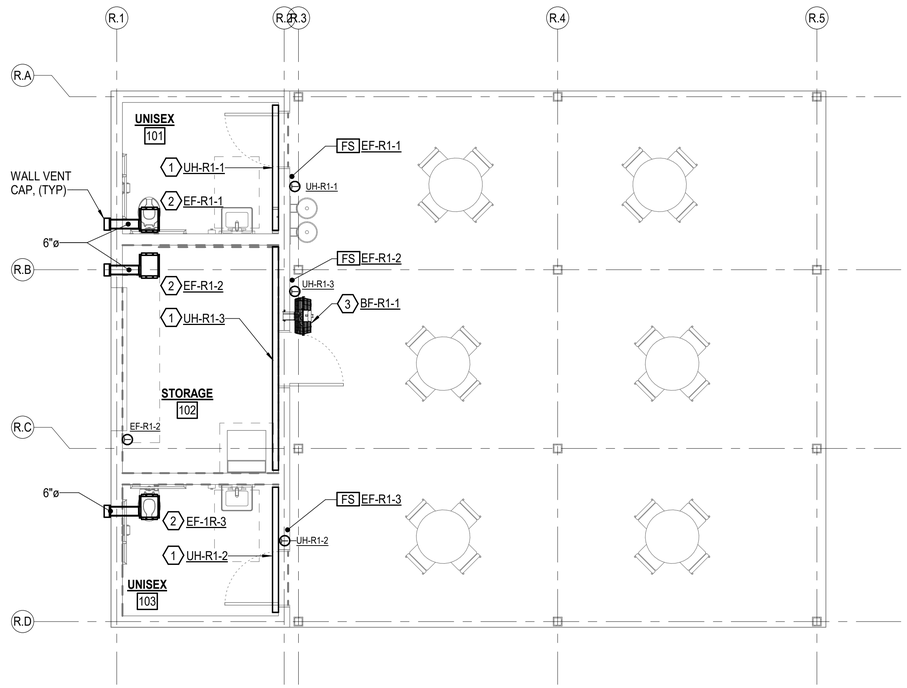

REHAB SHELTER MECHANICAL PLAN
SCALE: 1/4" = 1'-0"

GRAPHIC SCALE(S)

1/4" = 1'-0" 5' 0' 5' 10'

PACE COLLABORATIVE
MECHANICAL ELECTRICAL ENGINEERS
WWW.PACE-ENGINEERING.COM

WALKER the GROUP ARCHITECTURE incorporated
PO BOX 541, NEW BERN, NC 28563
252-636-8778

NORTH CAROLINA PROFESSIONAL SEAL 058819 ENGINEER TIMOTHY N. HAHN

CRAVEN COMMUNITY COLLEGE-PUBLIC SAFETY TRAINING CENTER

525 Executive Pkwy
New Bern, NC 28562

BID DOCUMENTS

SCO # 24-27879-01A

No.	Date	Revisions

Project Number: 2407.SAFE
Date: 07/28/25
Drawn: MTF
Checked: ETS
Scale: AS NOTED
Drawing Title: REHAB SHELTER AND GATEFLOOR PLAN
Sheet Number: 34
Drawing Number: M-102

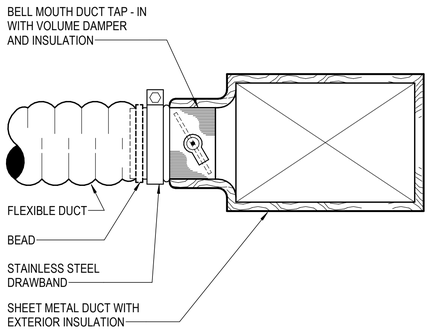

FLEXIBLE DUCT INSTALLATION DETAIL
NO SCALE

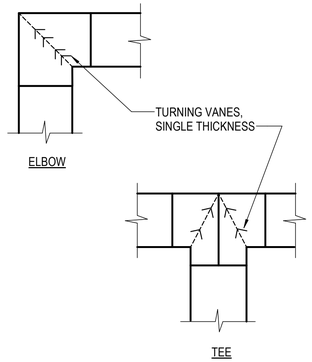

DUCTWORK FITTING DETAILS
NO SCALE

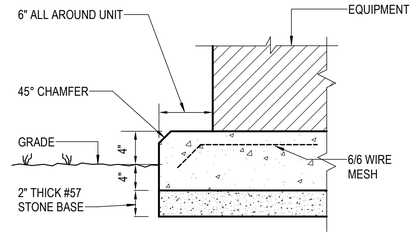

NOTE: CONCRETE SHALL BE 3,500 PSI WITH A MAX W/C RATIO OF 0.58 AND AN AIR CONTENT OF 5-7%

CONCRETE PAD DETAIL - EXTERIOR
NO SCALE

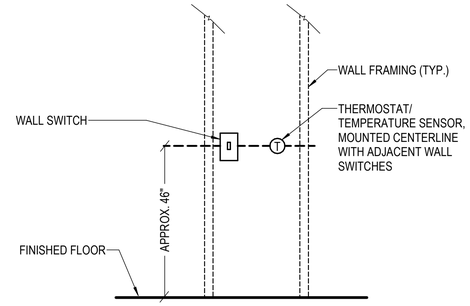

SWITCH/THERMOSTAT MOUNTING HEIGHT DETAIL
NO SCALE

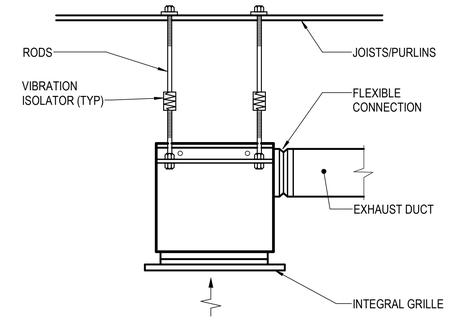

CABINET EXHAUST FAN DETAIL
NO SCALE

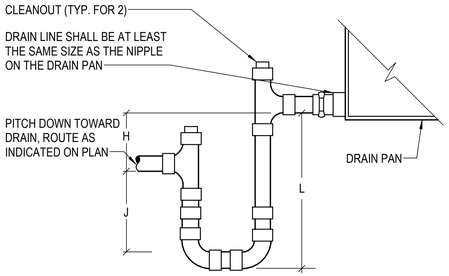

DRAIN PAN TRAPPING FOR SECTION UNDER NEGATIVE PRESSURE:

L = H + J + PIPE DIAMETER WHERE:

H = 1 INCH FOR EACH INCH OF NEGATIVE PRESSURE PLUS 1 INCH

J = 1/2 H

DRAIN PAN TRAPPING FOR SECTION UNDER POSITIVE PRESSURE:

L = H + J + PIPE DIAMETER WHERE:

H = 1/2 INCH (MINIMUM)

J = 1/2 INCH PLUS THE UNIT POSITIVE STATIC PRESSURE AT COIL DISCHARGE (LOADED FILTERS)

CONDENSATE DRAIN TRAP
NO SCALE

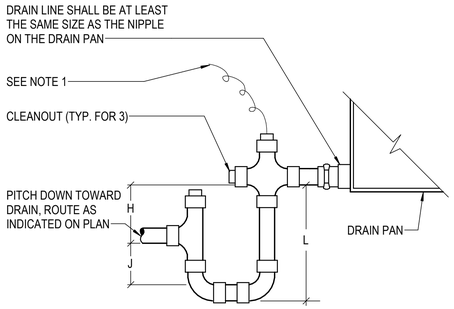

DRAIN PAN TRAPPING FOR SECTION UNDER NEGATIVE PRESSURE:

L = H + J + PIPE DIAMETER WHERE:

H = 1 INCH FOR EACH INCH OF NEGATIVE PRESSURE PLUS 1 INCH

J = 1/2 H

DRAIN PAN TRAPPING FOR SECTION UNDER POSITIVE PRESSURE:

L = H + J + PIPE DIAMETER WHERE:

H = 1/2 INCH (MINIMUM)

J = 1/2 INCH PLUS THE UNIT POSITIVE STATIC PRESSURE AT COIL DISCHARGE (LOADED FILTERS)

NOTES:

1. FOR INDOOR AIR HANDLING UNITS, UNITARY AIR CONDITIONERS, AND DEHUMIDIFIERS, PROVIDE RECTORSEAL EZ TRAP 83230 EXT-230 WITH INTEGRAL OVERFLOW SENSOR, OR APPROVED EQUAL.
2. FOR ROOF MOUNTED HVAC UNITS, THE CONTRACTOR SHALL PROVIDE MOISTURE SENSOR IN DRAIN PAN TO DE-ENERGIZE UNIT SHOULD PRIMARY DRAIN GET CLOGGED.

INDOOR CONDENSATE DRAIN TRAP DETAIL
NO SCALE

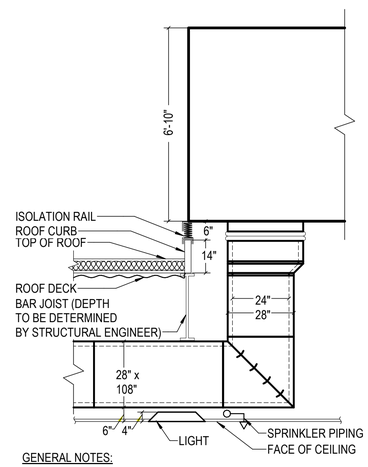

GENERAL NOTES:

RTU FOOTPRINT (90-130 TONS, NO GAS SECTION) IS 36'x12' WITH 8' ALL AROUND FOR SERVICE CLEARANCE.

BOTTOM OF BAR JOIST TO FACE OF CEILING BELOW RTU'S MIN. 34".

SECTION AT LARGE RTU
NO SCALE

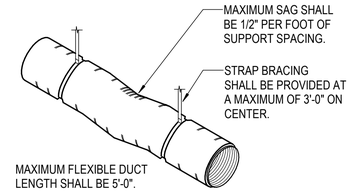

INSULATED FLEXIBLE DUCTWORK DETAIL
NO SCALE

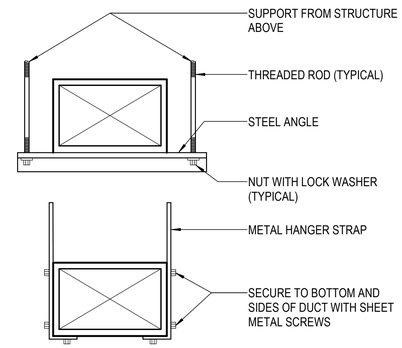

NOTE: FOR ANGLE SIZE AND HANGER STRAP GAUGE, SEE SMACNA LOW PRESSURE DUCT CONSTRUCTION STANDARDS.

DUCT SUPPORT DETAIL
NO SCALE

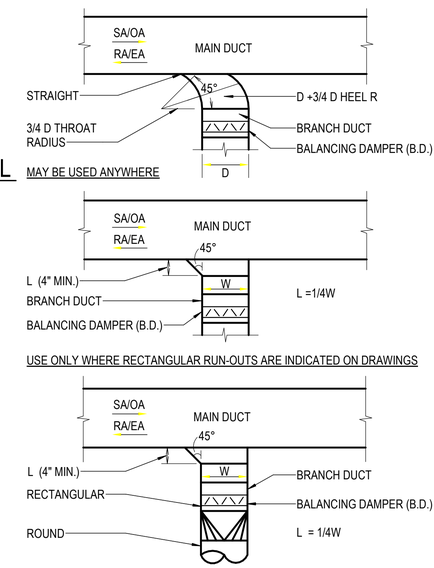

BRANCH CONNECTION DETAILS
NO SCALE

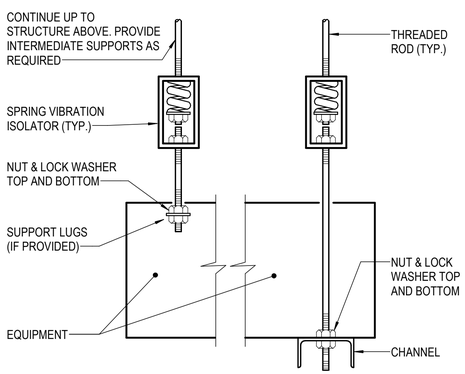

SUSPENDED EQUIPMENT SUPPORT DETAIL
NO SCALE

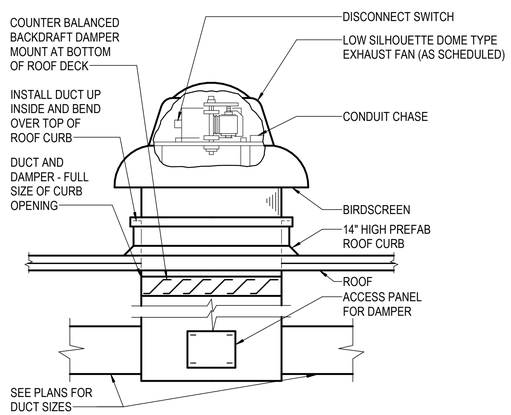

ROOF EXHAUST FAN DETAIL (W/ DUCTWORK)
NO SCALE

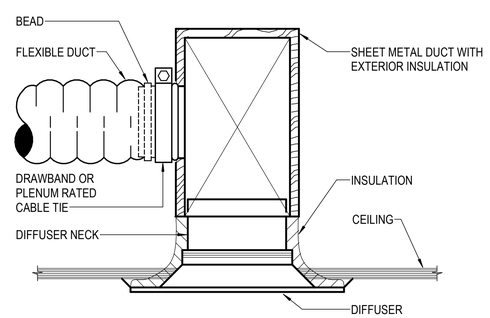

INSTALL PER THIS DETAIL WHERE SPACE ABOVE CEILING IS LIMITED

NO SCALE

CEILING DIFFUSER INSTALLATION DETAIL
NO SCALE

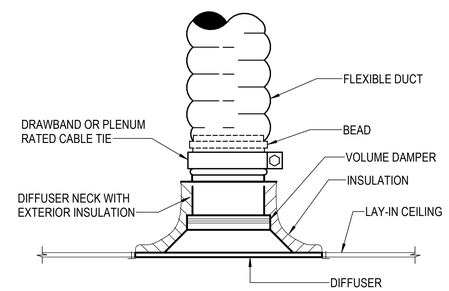

TYPICAL INSTALLATION DETAIL
NO SCALE

WALKER the GROUP ARCHITECTURE incorporated
PO BOX 541, NEW BERN, NC 28563
252-636-8778

NORTH CAROLINA PROFESSIONAL SEAL 058819 ENGINEER TIMOTHY N. HAHN

CRAVEN COMMUNITY COLLEGE- PUBLIC SAFETY TRAINING CENTER

525 Executive Pkwy New Bern, NC 28562

BID DOCUMENTS

SCO # 24-27879-01A

No.	Date	Revisions

Project Number 2407.SAFE	Date 07/28/25
Drawn MTF	Checked ETS
Scale AS NOTED	

Drawing Title

DETAILS

Sheet Number

Of 34

Drawing Number

M-501

Pace COLLABORATIVE MECHANICAL ELECTRICAL ENGINEERS WWW.PACE-ENGINEERING.COM

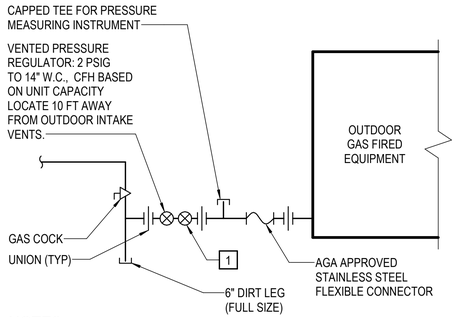

NOTES

1 **PROVIDE OVERPRESSURE PROTECTION DEVICE FOR ANY REGULATORS WITH UPSTREAM GAS PRESSURE OVER 2 PSIG PER 2021 VFGC 416.**

OUTDOOR EQUIPMENT GAS CONNECTION DETAIL

NO SCALE

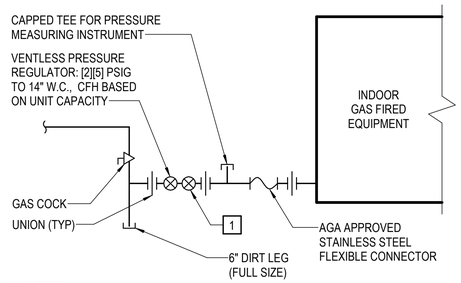

NOTES

1 **PROVIDE OVERPRESSURE PROTECTION DEVICE FOR ANY REGULATORS WITH UPSTREAM GAS PRESSURE OVER 2 PSIG PER 2021 VFGC 416.**

INDOOR EQUIPMENT GAS CONNECTION DETAIL

NO SCALE

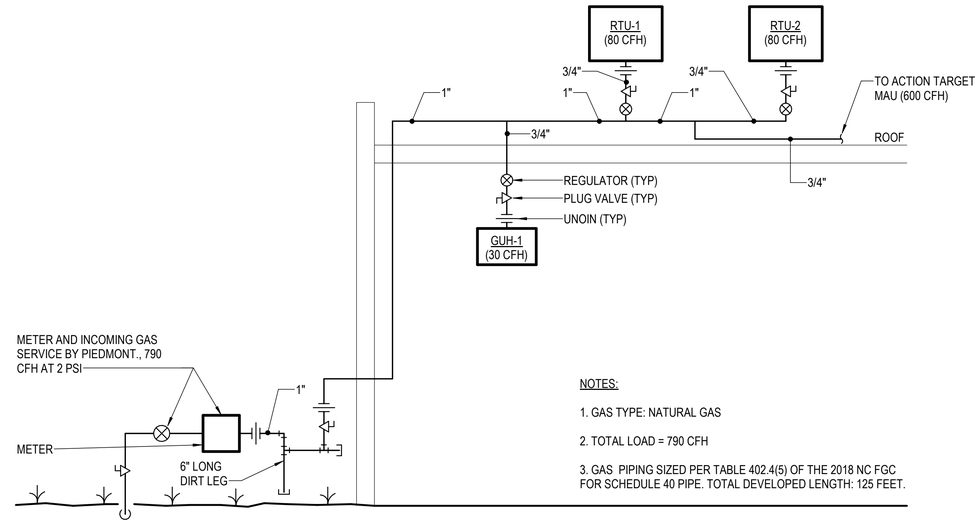

NOTES:

1. GAS TYPE: NATURAL GAS
2. TOTAL LOAD = 790 CFH
3. GAS PIPING SIZED PER TABLE 402.4(5) OF THE 2018 NC FGC FOR SCHEDULE 40 PIPE. TOTAL DEVELOPED LENGTH: 125 FEET.

GAS RISER DIAGRAM

NO SCALE

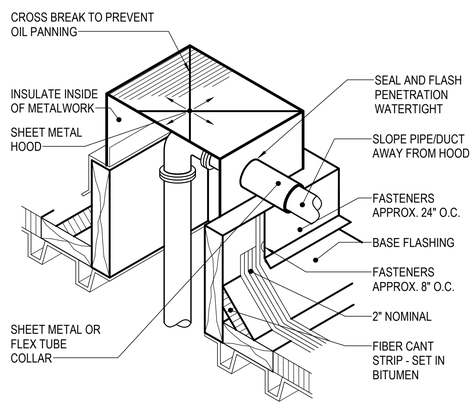

PIPE ROOF PENETRATION DETAIL

NO SCALE

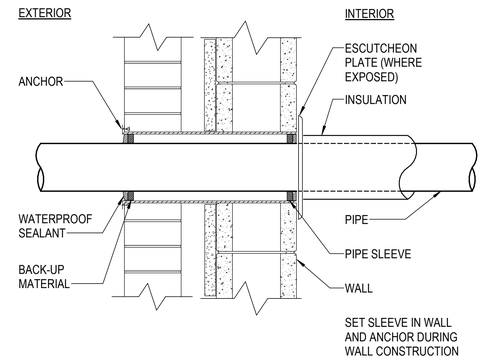

PIPE SLEEVE THRU WALL DETAIL

NO SCALE

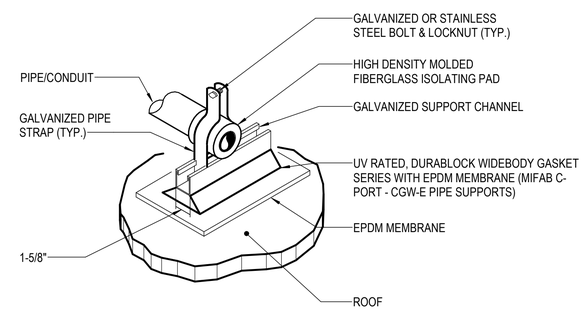

NOTE: COORDINATE PIPE ROOF SUPPORT SPACING REQUIREMENTS WITH MANUFACTURER.

ROOFTOP PIPE SUPPORT DETAIL

NO SCALE

WALKER the GROUP ARCHITECTURE incorporated
PO BOX 541, NEW BERN, NC 28563
252-636-8778

NORTH CAROLINA PROFESSIONAL SEAL 058819 ENGINEER TIMOTHY N. HAHN

CRAVEN COMMUNITY COLLEGE-PUBLIC SAFETY TRAINING CENTER

525 Executive Pkwy
New Bern, NC 28562

BID DOCUMENTS

SCO # 24-27879-01A

No.	Date	Revisions

Project Number: 2407.SAFE
Date: 07/28/25
Drawn: MTF
Checked: ETS
Scale: AS NOTED
Drawing Title: **DETAILS**

Sheet Number
Of 34

Drawing Number
M-502

PACE COLLABORATIVE
MECHANICAL ELECTRICAL ENGINEERS
WWW.PACE-ENGINEERING.COM

LOUVER SCHEDULE - INDOOR RANGE

TAG	SERVICE	SIZE (IN.) WxH	FREE AREA (SF)	C.F.M.	SERVES	REMARKS
LV-1	INTAKE	24 X 24	1.6	680	EF-1	SEE NOTES

NOTES:
1. SELECTIONS BASED ON GREENHECK.
2. PROVIDE WITH BIRDSCREEN.
3. PROVIDE ALUMINUM STORMPROOF CONSTRUCTION.
4. PROVIDE COLOR CHART FOR FINISH SELECTION BY ARCHITECT.
5. PROVIDE "KYNAR" FINISH OR EQUAL.
6. LOUVER SHALL BE LISTED FOR AMCA 550 HIGH VELOCITY WIND-DRIVEN RAIN RESISTANCE.

DUCTLESS SPLIT SYSTEM HEAT PUMP SCHEDULE

			FAN DATA	HEATING DATA		ELECTRIC DATA INDOOR UNIT					ELECTRIC DATA OUTDOOR UNIT					
TAG	LOCATION	TOTAL COOLING CAPACITY M.B.H.	SUPPLY AIR C.F.M.	TOTAL M.B.H	COP	M.C.A.	M.O.C.P.	VOLTS	PHASE	TAG	M.C.A.	M.O.C.P.	VOLTS	PHASE	REFRIGERANT TYPE	REMARKS
DSS-1A	GATEHOUSE	18.0	320	19.0	3.4	INDOOR UNIT POWERED BY OUTDOOR UNIT				DSS-1B	11.0	28.0	208	1	R-410A	SEE NOTES

NOTES:
1. SELECTIONS BASED ON MITSUBISHI ELECTRIC.
2. COOLING CAPACITY BASED ON 95° F AMBIENT. HEATING CAPACITY BASED ON 47°F AMBIENT. HEATING CAPACITY AT 17°F AMBIENT SHALL BE 13.6 MBH.
3. PROVIDE INDOOR UNIT WITH COIL FREEZE PROTECTION, REMOTE MOUNTED THERMOSTAT, HIGH SIDE WALL CASSETTE CONFIGURATION.
4. INDOOR UNIT POWERED FROM OUTDOOR UNIT. IF AN ALTERNATE UNIT IS PROVIDED THAT REQUIRES SEPARATE POWER CONNECTIONS, ELECTRICAL CONTRACTOR TO PROVIDE ALL ADDITIONAL DISCONNECTS, BREAKERS, WIRING, AS REQUIRED FOR A FULLY FUNCTIONAL SYSTEM.

GRILLE, REGISTER & DIFFUSER SCHEDULE

TAG	TYPE	SERVICE	C.F.M. RANGE	NECK SIZE	MAX. P.D.	MODEL NUMBER	REMARKS
A	DIFFUSER	SUPPLY	50 - 110	6"	0.1	TDCA-AA	LAY-IN, 24x24 PANEL, 4-WAY BLOW PATTERN
AA	DIFFUSER	SUPPLY	105	6"	1.1	TDCA-AA	SURFACE MOUNT, 24x24 PANEL, 4-WAY BLOW PATTERN
B	DIFFUSER	SUPPLY	115 - 230	8"	0.1	TDCA-AA	LAY-IN, 24x24 PANEL, 4-WAY BLOW PATTERN
C	SIDEWALL GRILLE	SUPPLY	105	6 x 6	0.1	300FL	SURFACE MOUNT, 8x8 PANEL, 35° DEFLECTION, 1/2" BLADE SPACING
E	GRILLE	EXHAUST	50	6 x 6	0.1	350FL	SURFACE MOUNT, 24x24 PANEL, 35° DEFLECTION, 1/2" BLADE SPACING
Y	GRILLE	RETURN	35 - 120	6 x 6	0.1	350FL	LAY-IN, 24x24 PANEL, 35° DEFLECTION, 1/2" BLADE SPACING
YY	GRILLE	RETURN	75	6 x 6	0.1	350FL	SURFACE MOUNT, 24x24 PANEL, 35° DEFLECTION, 1/2" BLADE SPACING
Z	GRILLE	RETURN	830 - 935	16 x 16	0.1	350FL	LAY-IN, 24x24 PANEL, 35° DEFLECTION, 1/2" BLADE SPACING

THE FOLLOWING NOTES ARE TYPICAL UNLESS OTHERWISE NOTED:
1. SELECTIONS BASED ON TITUS.
2. PROVIDE ALUMINUM DIFFUSERS AND REGISTERS WITH OPPOSED BLADE VOLUME DAMPERS, BAKED STANDARD WHITE ENAMEL FINISH (INCLUDING HEAD OF SCREWS), MAXIMUM NC=25 AT HIGHEST CFM AND PROVIDE SQUARE TO ROUND TRANSITION AS REQUIRED.
3. PROVIDE 4-WAY PATTERN CEILING DIFFUSERS, U.O.N. ON PLANS OR SCHEDULE.
4. MAXIMUM PRESSURE DROP SHALL INCLUDE VOLUME DAMPER WHERE DAMPER IS PROVIDED.

FAN SCHEDULE - INDOOR RANGE

TAG	LOCATION	FAN TYPE	C.F.M.	E.S.P. (IN. WG.)	DRIVE	ELECTRICAL DATA H.P.	VOLTS	PHASE	REMARKS
EF-1	ROOF	DOWNBLAST	680	0.35	DIRECT	1/8	115	1	SEE NOTES
EF-2	ROOF	DOWNBLAST	150	0.50	DIRECT	1/6	115	1	SEE NOTES

NOTES:
1. SELECTIONS BASED ON GREENHECK.
2. PROVIDE DIRECT DRIVE FANS WITH ELECTRONIC SPEED CONTROLLER.
3. PROVIDE ROOF TOP CENTRIFUGAL FANS WITH CHATTERPROOF BACKDRAFT DAMPER, INTREGAL ELECTRICAL DISCONNECT, ALUMINUM CONSTRUCTION, REMOVABLE DOME, BIRDSCREEN AND MANUFACTURER'S ROOF CURB.

ELECTRIC UNIT HEATER SCHEDULE

TAG	NOMINAL CFM	TYPE	WATTS	NO. OF STEPS	VOLTS	PHASE	REMARKS
UH-R1-1	-	RADIANT COVE	900	1	120	1	SEE NOTES
UH-R1-2	-	RADIANT COVE	900	1	120	1	SEE NOTES
UH-R1-3	-	RADIANT COVE	1250	1	120	1	SEE NOTES
UH-R2-1	-	RADIANT COVE	900	1	120	1	SEE NOTES
UH-R2-2	-	RADIANT COVE	900	1	120	1	SEE NOTES
UH-R2-3	-	RADIANT COVE	1250	1	120	1	SEE NOTES

NOTES:
1. SELECTION BASED ON MARKEL.
2. PROVIDE WITH REMOTE WALL MOUNTED THERMOSTAT, AND MOUNTING BRACKETS.

FAN SCHEDULE - REHAB SHELTER

TAG	FAN TYPE	C.F.M.	E.S.P. (IN. WG.)	DRIVE	ELECTRICAL DATA H.P.	WATTS	VOLTS	PHASE	REMARKS
EF-R1-1	CEILING	70	0.30	DIRECT	-	15	120	1	SEE NOTES
EF-R1-2	CEILING	70	0.30	DIRECT	-	15	120	1	SEE NOTES
EF-R1-3	CEILING	100	0.30	DIRECT	-	21	120	1	SEE NOTES
BF-R1-1	BARRELL	-	-	DIRECT	.5	-	120	1	SEE NOTES
EF-R2-1	CEILING	70	0.30	DIRECT	-	15	120	1	SEE NOTES
EF-R2-2	CEILING	70	0.30	DIRECT	-	15	120	1	SEE NOTES
EF-R2-3	CEILING	100	0.30	DIRECT	-	21	120	1	SEE NOTES
BF-R2-1	BARRELL	-	-	DIRECT	.5	-	120	1	SEE NOTES

NOTES:
1. CEILING TYPE SELECTIONS BASED ON GREENHECK. BARRELL TYPE SELECTIONS BASED ON BAF.
2. PROVIDE DIRECT DRIVE FANS WITH ELECTRONIC SPEED CONTROLLER.
3. PROVIDE CABINET CEILING FANS WITH CHATTERPROOF BDD, INTEGRAL ELECTRICAL DISCONNECT, DUCT FLANGE, INTEGRAL OFF-WHITE ALUMINUM INTAKE GRILLE, AND ROUND WALL CAP.

ROOFTOP UNIT (GAS HEATING/ELECTRIC COOLING) SCHEDULE

	SUPPLY FAN DATA				DX COOLING DATA						GAS HEATING DATA		ELECTRICAL DATA						
TAG	S.A. C.F.M.	O.A. C.F.M.	E.S.P.	H.P.	TOTAL CAPACITY M.B.H.	SENS. CAPACITY M.B.H.	E.D.B. (°F)	E.W.B. (°F)	L.D.B. (°F)	L.W.B. (°F)	INPUT M.B.H.	OUTPUT M.B.H.	M.C.A.	M.O.C.P.	VOLTS	PHASE	REFRIGERANT TYPE	OPERATING WEIGHT LBS.	REMARKS
RTU-1	1230	210	0.5	1.7	43.2	35.2	77.2	65.0	50.0	49.5	80	64.8	16.9	25.0	460	3	R-454B	750	SEE NOTES
RTU-2	975	60	0.5	1.2	33.7	26.5	75.8	62.5	50.0	49.8	80	64.8	14.8	20.0	460	3	R-454B	675	SEE NOTES

NOTES:
1. SELECTION BASED ON DAIKIN.
2. CONDENSER ENTERING AIR: 95°F.
3. EXTERNAL STATIC PRESSURE INCLUDES SUPPLY AND RETURN DUCT SYSTEM ONLY.
4. PROVIDE UNITS WITH MERV 8 FILTER, VFD SA FAN, ROOF CURB WITH VIBRATION ISOLATION RAILS, FULL MODULATING GAS HEAT, AND PHASE FAILURE/PHASE REVERSAL RELAY. PROVIDE A MEANS OF DISCONNECT.
5. PROVIDE UNITS WITH MODULATING HOT GAS REHEAT, INVERTER SCROLL COMPRESSOR, AND BACNET INTERFACE.

BID ALTERNATE NOTE:

REFER TO GI001 FOR BID ALTERNATE INFORMATION.

GAS FIRED UNIT HEATER SCHEDULE - INDOOR RANGE

TAG	INPUT CAPACITY (C.F.H.)	M.B.H. OUTPUT CAPACITY	APPROX. C.F.M.	MOUNTING HEIGHT (FT)	EXHAUST VENT CONNECTION	INTAKE VENT CONNECTION	MOTOR H.P.	ELECTRICAL DATA VOLTS	PHASE	REMARKS
GUH-1	30	24.9	505	7'-6"	3"	3"	1/15	115	1	SEE NOTES

NOTES:
1. SELECTION BASED ON MODINE MODEL HDS.
2. PROVIDE WITH REMOTE WALL MOUNTED THERMOSTAT, INTEGRAL ELECTRICAL DISCONNECT AND PROPELLER.
3. PROVIDE SEPARATED COMBUSTION UNIT HEATER WITH 30° DEFLECTOR HOOD, INTERNAL OVERLOAD PROTECTION, CONTROL TRANSFORMER, MULTI-TRY IGNITION WITH 100% LOCKOUT, FAN RELAY, SINGLE-STAGE NATRUAL GAS VALVE, INTEGRAL DISCONNECT, FAN GUARD, SIDE ACCESS FOR BURNERS AND CONTROLS, ALUMINIZED STEEL HEAT EXCHANGER, MANUFACTURER'S VERTICAL CONCENTRIC VENT KIT, AND MANUFACTURER'S SUSPENSION KIT.

WALKER the GROUP ARCHITECTURE incorporated
PO BOX 541, NEW BERN, NC 28563
252-636-8778

NORTH CAROLINA PROFESSIONAL SEAL 058819 ENGINEER TIMOTHY N. HAHN

CRAVEN COMMUNITY COLLEGE- PUBLIC SAFETY TRAINING CENTER

525 Executive Pkwy New Bern, NC 28562

BID DOCUMENTS

SCO # 24-27879-01A

Revisions

No.	Date

Project Number: 2407.SAFE
Date: 07/28/25
Drawn: MTF
Checked: ETS
Scale: AS NOTED
Drawing Title: SCHEDULES

Sheet Number
Of 34

Drawing Number
M-601

Pace COLLABORATIVE MECHANICAL ELECTRICAL ENGINEERS WWW.PACE-ENGINEERING.COM

BUILDING AUTOMATION SYSTEM INTEGRATION NOTE:

THE FOLLOWING FACILITY SHALL BE CONTROLLED BY A DIRECT DIGITAL CONTROL BUILDING AUTOMATION SYSTEM UTILIZING ASHRAE STANDARD 135 (BACnet) AS THE COMMUNICATION BACKBONE BETWEEN ALL CONTROLLERS. FOR EQUIPMENT CONTROLLERS THAT DO NOT NATIVELY COMMUNICATE VIA BACnet, A PROTOCOL CONVERTER SHALL BE PROVIDED TO ALLOW INTEGRATION INTO THE BAS VIA BACnet. ANY SPECIAL SOFTWARE REQUIRED TO ACCESS AN INTEGRATED EQUIPMENT CONTROLLER SHALL BE PROVIDED AND INSTALLED ON BAS WORKSTATION. THIS SYSTEM WILL NEED TO INTEGRATE INTO THE CAMPUS SCHNEIDER ELECTRIC SYSTEM.

BID ALTERNATE NOTE:

REFER TO GI001 FOR BID ALTERNATE INFORMATION.

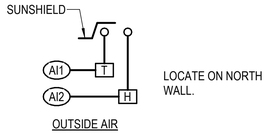

BUILDING DDC CONTROLLER		
INPUTS		
ANALOG	AI1	OA TEMPERATURE
	AI2	OA HUMIDITY

BUILDING GLOBAL POINT (DDC)

NO SCALE

SEQUENCE OF OPERATION

EF-R1-2: EXHAUST FAN SHALL BE CONTROLLED BY THERMOSTAT ACTIVATION. WHEN THE SPACE TEMPERATURE RISES ABOVE 85°F, THE ASSOCIATEDEXHAUST FAN SHALL BE ENERGIZED. WHEN THE SPACE TEMPERATURE IS BELOW 85°F, THE ASSOCIATED EXHAUST FAN SHALL BE DE-ENERGIZED.

EF-2: EXHAUST FAN SHALL BE CONTROLLED BY 7-DAY PROGRAMMABLE TIME CLOCK. EXHAUST FAN SHALL ENERGIZE DURING OCCUPIED HOURS.

EF-R1, EF-R1-3: EXHAUST FAN SHALL ENERGIZED WITH ASSOICATED LIGHT SWITCH. SEE ELECTRICAL DOCUMENTS FOR ADDITIONAL REQUIREMENTS.

EXHAUST FAN CONTROLS

NO SCALE

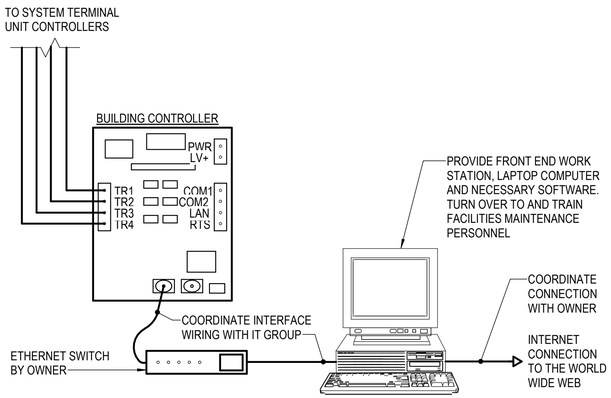

DDC CONTROL SYSTEM GENERAL ARCHITECTURE

NO SCALE

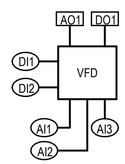

VFD		
LOCAL DDC CONTROLLER		
INPUTS		
ANALOG	AI1	SPEED, %
	AI2	KWH CONSUMPTION
	AI3	CURRENT, AMPS
DIGITAL	DI1	DRIVE STATUS
	DI2	DRIVE FAULT
OUTPUTS		
ANALOG	AO1	SPEED CONTROL
DIGITAL	DO1	ENABLE/DISABLE

VFD CONTROL DIAGRAM (TYP U.O.N.)

NO SCALE

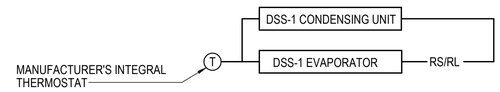

SEQUENCE OF OPERATION

COOLING: UNIT SHALL BE CONTROLLED BY THE MANUFACTURERS INTEGRAL THERMOSTAT. WHEN THE SPACE TEMPERATURE RISES ABOVE THE COOLING SETPOINT (75°F), THE THERMOSTAT SHALL ENERGIZE THE DSS UNITS AND ENERGIZE THE INDOOR UNIT SUPPLY FAN. WHEN THE SPACE TEMPERATURE DROPS BELOW THE THERMOSTAT SETPOINT, THE OPPOSITE SHALL OCCUR.

HEATING: UPON A FALL IN SPACE TEMPERATURE BELOW HEATING SETPOINT (68°F), THE THERMOSTAT SHALL ENERGIZE THE INDOOR UNIT SUPPLY FAN AND OUTDOOR COMPRESSORS. UPON A FURTHER DROP IN TEMPERATURE, THE UNITS ELECTRIC HEATING COIL SHALL BE ENERGIZED. UPON A RISE IN SPACE TEMPERATURE ABOVE HEATING SETPOINT, THE OPPOSITE SHALL OCCUR.

DUCTLESS SPLIT SYSTEM CONTROLS

NO SCALE

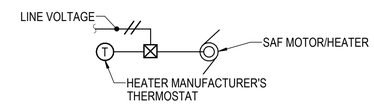

NOTE: MULTIPLE UNITS EXIST FOR EACH DESIGNATION.

SEQUENCE OF OPERATION

UNIT SHALL BE CONTROLLED BY A WALL MOUNTED THERMOSTAT. UPON A FALL IN SPACE TEMPERATURE BELOW 65°F, THE UNIT SHALL BE ENERGIZED. UPON A RISE IN SPACE TEMPERATURE ABOVE 68°F, THE OPPOSITE SHALL OCCUR.

UNIT HEATER CONTROLS

NO SCALE

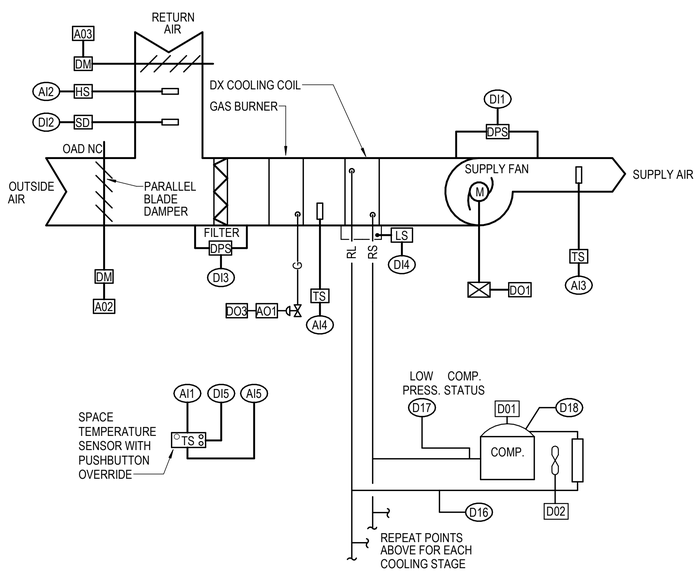

AHUCV		
LOCAL DDC CONTROLLER		
INPUTS		
ANALOG	AI1	SPACE TEMPERATURE
	AI2	HUMIDITY SENSOR
	AI3	SUPPLY AIR TEMPERATURE
	AI4	HW COIL DISCHARGE AVERAGE
	AI5	SPACE TEMPERATURE SETPOINT
DIGITAL	DI1	SUPPLY AIR FAN STATUS
	DI2	SMOKE DETECTOR
	DI3	DIRTY FILTER
	DI4	CONDENSATE HI-LEVEL
	DI5	UNOCCUPIED OVERRIDE
	DI6	REFRIG. HIGH PRESSURE ALARM
	DI7	REFRIG. LOW PRESSURE ALARM
	DI8	COMPRESSOR ALARM
OUTPUTS		
ANALOG	AO1	MODULATING GAS CONTROL
	AO2	OUTSIDE AIR DAMPER CONTROL
	AO3	RETURN AIR DAMPER CONTROL
DIGITAL	DO1	SUPPLY AIR FAN START
	DO2	CONDENSER FAN ON/OFF
	DO3	GAS HEAT ON/OFF

SEQUENCE OF OPERATION

OCCUPIED MODE: WHEN THE SYSTEM IS INDEXED TO OCCUPIED OR SYSTEM IS MANUALLY INDEXED FROM UNOCCUPIED TO OCCUPIED MODE BY OVERRIDE BUTTON INTEGRAL TO SPACE TEMPERATURE SENSOR, THE RESPECTIVE COOLING/HEATING DEVICE SHALL MODULATE TO MAINTAIN RESPECTIVE PROGRAMMED TEMPERATURE SETTINGS (75°F COOLING, 68°F HEATING). THE SUPPLY FAN SHALL RUN CONTINUOUSLY. THE OUTSIDE AIR DAMPER SHALL OPEN.

UNOCCUPIED MODE: WHEN THE SYSTEM IS INDEXED TO UNOCCUPIED, THE UNIT WILL BE DE-ENERGIZED UNTIL SPACE TEMPERATURE RISES ABOVE OR FALLS BELOW PROGRAMMED SETBACK TEMPERATURES (80°F COOLING, 60° HEATING). THE RESPECTIVE COOLING/HEATING DEVICE SHALL BE ACTIVATED. THE OUTSIDE AIR DAMPER SHALL BE CLOSED.

COOLING-OCCUPIED: THE SUPPLY FAN SHALL BE ENERGIZED WHEN THE SYSTEM IS INDEXED TO OCCUPIED. IF THE SPACE TEMPERATURE RISES ABOVE THE COOLING SETPOINT (74°F) THEN THE COMPRESSOR SHALL MODULATE TO MAINTAIN SETPOINT. WHEN THE SPACE TEMPERATURE DROPS BELOW THE SETPOINT, THE OPPOSITE SHALL OCCUR.

HEATING-OCCUPIED: THE SUPPLY FAN SHALL BE ENERGIZED WHEN THE SYSTEM IS INDEXED TO OCCUPIED. IF THE SPACE TEMPERATURE DROPS BELOW THE HEATING SETPOINT (68°F) THEN THE GAS BURNER SHALL MODULATE TO MAINTAIN SETPOINT. WHEN THE SPACE TEMPERATURE RISES ABOVE THE SETPOINT, THE OPPOSITE SHALL OCCUR.

REHEAT: WHEN THE SYSTEM IS IN OCCUPIED COOLING MODE AND UPON A RISE IN SPACE HUMIDITY ABOVE 60 PERCENT, THE CHILLED WATER VALVE SHALL OPEN FULLY AND THE HOT WATER REHEAT CONTROL VALVE SHALL MODULATE OPEN TO MAINTAIN SPACE TEMPERATURE SETPOINT. UPON A FALL IN SPACE HUMIDITY BELOW 50 PERCENT, THE HOT WATER COIL CONTROL VALVE SHALL BE FULLY CLOSED TO THE COIL AND THE CHILLED WATER COIL CONTROL VALVE SHALL RETURN TO COOLING OPERATION.

CONDENSATE HIGH LEVEL PROTECTION: IF CONDENSATE HIGH LEVEL SWITCH IS ACTIVATED, UNIT SHALL BE DE-ACTIVATED AND AN ALARM INITIATED.

MORNING WARM-UP: THE UNIT SHALL EMPLOY OPTIMUM START. PRIOR TO OCCUPIED STATUS, THE UNIT SHALL GO INTO MORNING WARM-UP. AHU CW COIL CONTROL VALVE SHALL BE CLOSED TO THE COIL. THE OA DAMPER SHALL BE CLOSED. THE SUPPLY FAN SHALL BE ENERGIZED AND THE HW VALVE SHALL BE FULLY OPEN TO THE COIL UNTIL OCCUPIED SPACE TEMPERATURE SETPOINT IS ACHIEVED.

MORNING COOL-DOWN: THE UNIT SHALL EMPLOY OPTIMUM START. PRIOR TO OCCUPIED STATUS, THE UNIT SHALL GO INTO MORNING COOL-DOWN. THE OA DAMPER SHALL FULLY CLOSE, THE SUPPLY FAN SHALL BE ENERGIZED, THE CW VALVE SHALL MODULATE TO MAINTAIN A 55°F LEAVING AIR TEMPERATURE AND THE HOT WATER VALVE SHALL BE FULLY CLOSED TO THE COIL.

ALARMS: ALARM FOR DIRTY FILTER: WHEN PRESSURE DROP EXCEEDS 0.5" WG ABOVE INITIAL PRESSURE DROP. ALARM IF LEAVING AIR TEMPERATURE EXCEEDS 60°F IN COOLING MODE OR DROPS BELOW 50°F IN HEATING MODE. ALARM IF SUPPLY FAN FAILS TO START OR FAILS DURING OPERATION. ALARM ON DETECTION OF HIGH CONDENSATE LEVEL.

CONSTANT VOLUME AHU CONTROL DIAGRAM

NO SCALE

WALKER the GROUP ARCHITECTURE incorporated
PO BOX 541, NEW BERN, NC 28563
252-636-8778

CRAVEN COMMUNITY COLLEGE-PUBLIC SAFETY TRAINING CENTER

525 Executive Pkwy
New Bern, NC 28562

BID DOCUMENTS

SCO # 24-27879-01A

No.	Date	Revisions

Project Number	Date
2407.SAFE	07/28/25
Drawn	**Checked**
MTF	ETS

Scale
AS NOTED

Drawing Title

CONTROLS

Sheet Number
Of 34

Drawing Number

M-701

PACE COLLABORATIVE
MECHANICAL ELECTRICAL ENGINEERS
WWW.PACE-ENGINEERING.COM

GENERAL NOTES

GENERAL: UNLESS SPECIFICALLY INDICATED OTHERWISE, ALL WORK SHOWN ON ELECTRICAL DRAWINGS IS NEW WORK TO BE PROVIDED UNDER THIS CONTRACT.

COORDINATION: COORDINATE AND COOPERATE WITH ALL TRADES ON THE PROJECT. THE CONTRACTOR SHALL REVIEW ALL CONTRACT DOCUMENTS INCLUDING CIVIL, STRUCTURAL, ARCHITECTURAL DRAWINGS AND SPECIFICATIONS. CONTRACTOR SHALL COORDINATE AND ADJUST ACCORDINGLY AS DIRECTED BY THE ENGINEER.

AS-BUILT DRAWINGS: SECURE AN EXTRA SET OF ELECTRICAL DRAWINGS TO BE KEPT ON SITE AND MARK, DAILY, THE DRAWINGS IN RED AS THE PROJECT PROGRESSES IN ORDER TO KEEP AN ACCURATE RECORD OF ALL DEVIATIONS BETWEEN THE WORK SHOWN ON THE DRAWINGS AND THE WORK WHICH IS ACTUALLY INSTALLED. THESE MARKED DRAWINGS SHALL REFLECT ANY AND ALL CHANGES AND REVISIONS TO THE ORIGINAL DESIGN WHICH EXISTS IN THE COMPLETED WORK. DELIVER THE MARKED DRAWINGS TO THE ENGINEER AT PROJECT CLOSE-OUT.

TESTS: TEST ALL WIRING FOR CONTINUITY AND GROUNDS BEFORE CONNECTING ANY FIXTURES OR DEVICES. PERFORM INSULATION RESISTANCE TESTS ON ALL WIRING #6 OR LARGER TO ENSURE THAT ALL PORTIONS ARE FREE FROM SHORT-CIRCUITS AND GROUNDS.

INSPECTIONS: ARRANGE ALL NECESSARY INSPECTIONS. DELIVER ALL REQUIRED INSPECTION CERTIFICATES TO THE OWNER.

ELECTRICAL SERVICE: PROVIDE THE ELECTRICAL SERVICE. COMMUNICATE WITH THE LOCAL POWER COMPANY, VERIFY ALL REQUIREMENTS, AND COORDINATE ALL EFFORTS.

GROUNDING: PROVIDE GROUNDING IN ACCORDANCE WITH THE NEC FOR THE ENTIRE ELECTRICAL SYSTEM INCLUDING EQUIPMENT FRAMES, CONDUITS, SWITCHES, CONTROLLERS, WIRE-WAYS, NEUTRAL CONDUCTORS, AND OTHER EQUIPMENT. PROVIDE A GROUNDING CONDUCTOR IN ALL POWER CONDUITS.

LABELS: PROVIDE LABELS FOR ALL PANELBOARDS, CABINETS, SAFETY SWITCHES, MOTOR-DISCONNECT SWITCHES, AND MOTOR CONTROLLERS. LABELS SHALL BE MACHINE ENGRAVED, LAMINATED PLASTIC, PERMANENTLY ATTACHED WITH SELF-TAPPING SCREWS OR RIVETS. DO NOT USE SELF-ADHESIVE LABELS. LABEL SHALL INDICATE EQUIPMENT DESIGNATION AND ASSOCIATED PANEL AND CIRCUIT THAT SERVES IT.

J-BOX LABELING: LABEL ALL JUNCTION BOXES WITH PERMANENT MARKER IDENTIFYING CIRCUIT NUMBER AND PANELBOARD OF CIRCUITS WITHIN.

WIRING DEVICES: LABEL ALL WIRING DEVICES WITH PANELBOARD AND CIRCUIT DESIGNATION PERMANENTLY ATTACHED WITH BLACK TYPED DESIGNATION ON CLEAR TAPE.

PANEL DIRECTORY: PROVIDE TYPEWRITTEN PANELBOARD DIRECTORY CARD IN EACH PANELBOARD WITH CIRCUIT LOAD INFORMATION AND ROOM NUMBER CLEARLY IDENTIFIED. USE ACTUAL ROOM NUMBERS IN THE BUILDING, NOT THE ROOM NUMBERS SHOWN ON THE CONTRACT DRAWINGS, AS THEY ARE OFTEN DIFFERENT.

MOTOR COORDINATION: MOTORS, MOTOR STARTERS,CONTROLLERS, INTEGRAL DISCONNECT SWITCHES, AND CONTACTORS SHALL BE PROVIDED WITH THEIR RESPECTIVE PIECES OF EQUIPMENT BY THE EQUIPMENT SUPPLIER. COMMUNICATE WITH THE TRADES PROVIDING THE EQUIPMENT, VERIFYING ALL REQUIREMENTS, PROVIDE ALL ELECTRICAL CONNECTIONS REQUIRED THEREIN, AND INSTALL MOTOR STARTERS.

MOTOR DISCONNECTS: ALL MOTORS SHALL HAVE DISCONNECTING MEANS.

MOTOR CONTROLLERS: ALL 3-PHASE MOTORS SHALL HAVE MAGNETIC MOTOR CONTROLLERS WITH SOLID STATE OVERLOAD RELAY PROTECTION. THE SOLID STATE OVERLOAD RELAY SHALL HAVE PHASE LOSS AND PHASE OVERCURRENT PROTECTION WITH AUTOMATIC RESET UPON RETURN OF NORMAL POWER.

MOTOR FUSE PROTECTION: WHERE FUSE PROTECTION IS SPECIFICALLY REQUIRED BY THE EQUIPMENT MANUFACTURER, PROVIDE FUSED SWITCHES IN LIEU OF NON-FUSED SWITCHES OR IN LIEU OF ENCLOSED CIRCUIT BREAKERS, OR OTHER DEVICES INDICATED.

REDUCED VOLTAGE STARTERS: REDUCED VOLTAGE STARTERS OR ELECTRONIC SOFT START CONTROLLERS OR VARIABLE FREQUENCY DRIVES (VFD) SHALL BE PROVIDED FOR ALL MOTORS 40HP AND LARGER AT 480 VOLTS, AND 20 HP AND LARGER AT 208 VOLTS.

CONNECTION DETAILS: SECURE APPROVED SHOP DRAWINGS SHOWING WIRING DIAGRAMS, ROUGH-IN AND HOOK UP DETAILS FROM OTHER INVOLVED CONTRACTORS FOR EQUIPMENT WHICH MUST BE CONNECTED ELECTRICALLY.

COORDINATION DETAILS: MECHANICAL EQUIPMENT WILL BE FURNISHED AND INSTALLED BY THE MECHANICAL CONTRACTOR. THE LOCATIONS SHOWN ON THE ELECTRICAL DRAWINGS ARE APPROXIMATE. COORDINATE WITH THE MECHANICAL CONTRACTOR TO DETERMINE THE EXACT LOCATION OF EACH PIECE OF EQUIPMENT AND DETERMINE THE EXACT ROUGH-IN AND CONNECTION REQUIREMENTS.

WORKING CLEARANCE: COORDINATE FINAL LOCATIONS OF ELECTRICAL EQUIPMENT WITH MECHANICAL DUCTWORK, PIPING ETC. AND ENSURE WORKING CLEARANCE REQUIRED BY NEC WILL BE MET. SUFFICIENT ACCESS AND WORKING SPACE SHALL BE PROVIDED AND MAINTAINED AROUND ELECTRICAL EQUIPMENT AS REQUIRED BY THE NATIONAL ELECTRICAL CODE. CONTRACTOR SHALL COORDINATE FINAL LOCATION OF EQUIPMENT PROVIDED AND INSTALLED BY OTHER TRADES.

STARTER MOUNTING: WHERE AN INDIVIDUALLY MOUNTED SAFETY SWITCH, STARTER OR CIRCUIT BREAKER IS SHOWN ADJACENT TO ITS RESPECTIVE LOAD AND NOT MOUNTED ON A WALL, PROVIDE ALL SUPPORTS, BRACKETS, ANCHORING, ETC. NECESSARY TO PROPERLY SUPPORT THE DEVICE.

LIGHTING ARRANGEMENT: ARRANGE LIGHTING FIXTURES IN ACCORDANCE WITH THE ARCHITECTURAL REFLECTED CEILING PLANS.

LIGHTING COORDINATION: COORDINATE LIGHTING FIXTURES WITH GRILLES, DIFFUSERS, SPRINKLER HEADS, AND ACCESS PANELS, ETC. PROVIDE FIXTURE MOUNTING BRACKETS, ACCESSORIES, PLASTER FRAMES, ETC.. SUITABLE FOR THE CEILING TYPES INDICATED ON THE ARCHITECTURAL PLANS.

LIGHTING CONTROL TESTING: UPON COMPLETION OF THE INSTALLATION OF ALL LIGHTING SYSTEMS AND CONTROL DEVICES, CONTRACTOR SHALL CONFIRM PROPER OPERATION OF ALL LIGHTING CONTROLS, AND DEMONSTRATE PROPER OPERATION TO THE OWNER AND/OR ENGINEER.

MATERIAL COORDINATION: VERIFY CEILING AND WALL CONSTRUCTION AND MATERIAL PRIOR TO ORDERING LIGHT FIXTURES OR OTHER DEVICES TO ENSURE PROPER FIXTURE OR DEVICE IS FURNISHED TO MATCH CONSTRUCTION.

MOUNTING HEIGHTS: MOUNTING HEIGHTS INDICATED ARE FROM THE FINISHED FLOOR TO THE CENTERLINE OF THE WIRING DEVICE UNLESS OTHERWISE NOTED. MOUNTING HEIGHTS OF LIGHTING FIXTURES ARE TO THE BOTTOM OF THE FIXTURE UNLESS OTHERWISE NOTED.

DEVICE LOCATIONS: COORDINATE LOCATIONS OF SWITCHES, RECEPTACLES, AND TELE/DATA OUTLETS WITH OTHER WALL MOUNTED DEVICES SUCH AS THERMOSTATS AND CONTROL STATIONS.

EWC RECEPTACLES: RECEPTACLES FOR ELECTRIC WATER COOLERS (EWC) SHALL BE INSTALLED OUT OF VIEW AND BEHIND THE EWC ENCLOSURE. VERIFY THE MOUNTING HEIGHT WITH THE EQUIPMENT SUPPLIER PRIOR TO ROUGH-IN.

DEVICE COORDINATION: THOROUGHLY REVIEW AND COORDINATE ALL CASEWORK AND CABINET DRAWINGS AND ARCHITECTURAL ELEVATIONS WITH DEVICE LOCATIONS PRIOR TO ROUGH-IN OF OUTLET BOXES.

FLOOR LOCATIONS: VERIFY THE LOCATION OF ALL FLOOR OUTLET BOXES AND OF CONDUIT STUB-UPS WITH THE ARCHITECT'S FURNITURE AND EQUIPMENT LAYOUT PRIOR TO INSTALLATION.

MULTI-GANG JUNCTION BOXES: WHERE OUTLETS AND SWITCHES ARE SHOWN ON PLAN TO BE INSTALLED ADJACENT TO EACH OTHER AND AT THE SAME MOUNTING HEIGHT, THE DEVICES SHALL BE INSTALLED IN A MULTI-GANG OUTLET BOX, UON. THE SIZE OF THE OUTLET BOX SHALL BE DETERMINED BY THE NUMBER OF DEVICES AND CONDUCTORS THAT SHALL BE INSTALLED IN THE MULTI-GANG OUTLET BOX.

FIRE STOPPING: FOR ANY WALL OR FLOOR PENETRATIONS THROUGH FIRE-RATED STRUCTURES PROVIDE FIRE-STOPPING TO SEAL ALL THE PENETRATIONS AFTER THE CONDUIT HAS BEEN INSTALLED. FIRE STOPPING FOR PENETRATIONS SHALL BE UL APPROVED PER THE PENETRATION MADE IN ORDER TO MAINTAIN FIRE-RATED INTEGRITY OF THE STRUCTURE.

CLEAN UP: ON PROJECT CLOSE-OUT CLEAN ALL ELECTRICAL DEVICES, LIGHTING FIXTURES, AND LENSES, AND REMOVE ALL PAINT SPATTERS FROM DEVICES, FIXTURES AND PLATES. REPLACE ALL INOPERATIVE FIXTURES.

GROUND FAULT PROTECTION: RECEPTACLES LOCATED WITHIN 6'-0" OF THE EDGE OF SINKS SHALL BE PROVIDED WITH GROUND FAULT PROTECTION WHETHER SHOWN OR NOT.

LEGEND

LIGHTING

SUBSCRIPT 'x' INDICATES LIGHTING FIXTURE CONTROLLED AND ASSOCIATED CONTROL DEVICE(S).

- WALL MOUNTED LIGHTING FIXTURE
- AREA SITE LIGHTING FIXTURE
- A — LIGHTING FIXTURE TYPE SYMBOL. SEE LIGHTING FIXTURE DETAILS.
- LRP — LIGHTING RELAY PANEL
- P — PHOTOCELL, 1500W, 120V SPST, MOUNT ON ROOF, AIM NORTH
- O — CEILING MOUNTED DUAL TECHNOLOGY ULTRASONIC/PASSIVE INFRARED OCCUPANCY/VACANCY SENSOR.
- S — SINGLE POLE SWITCH, 20A, 120/277V, 46" AFF UON
- S_3 — THREE-WAY SWITCH, 20A, 120/277V, 46" AFF UON
- S_4 — FOUR-WAY SWITCH, 20A, 120/277V, 46" AFF UON
- S_D — DIMMER SWITCH, 46" AFF UON. FOR LED FIXTURES, COORDINATE VOLTAGE AND RATINGS OF SWITCH WITH TYPE AND QUANTITY OF DRIVERS TO BE CONTROLLED.
- S_O — WALL MOUNTED DUAL TECHNOLOGY OCCUPANCY/VACANCY SENSOR WITH SINGLE POLE SWITCH, 120/277V, MOUNT 46"AFF.
- S_{OD} — WALL MOUNTED DUAL TECHNOLOGY OCCUPANCY/VACANCY SENSOR WITH DIMMING CAPABILITIES, 120/277V, MOUNT 46"AFF. COORDINATE VOLTAGE AND RATINGS OF SWITCH WITH TYPE AND QUANTITY OF DRIVERS TO BE CONTROLLED.
- S_{DO} — WALL MOUNTED LOW VOLTAGE MOMENTARY CONTACT OVERRIDE SWITCH WITH DIMMING CAPABILITIES, 24VDC, MOUNT 46" AFF.
- S_L — WALL MOUNTED LOW VOLTAGE MOMENTARY CONTACT SWITCH, 24VDC, MOUNT 46"AFF.
- S_{LD} — WALL MOUNTED LOW VOLTAGE MOMENTARY CONTACT SWITCH WITH DIMMING CAPABILITIES, 24VDC, MOUNT 46"AFF.
- S_V — WALL MOUNTED DUAL TECHNOLOGY VACANCY SENSOR WITH SINGLE POLE SWITCH, 120/277V, MOUNT 46"AFF.

POWER

THE FOLLOWING SUBSCRIPTS SHALL APPLY TO RECEPTACLES WHERE USED:

- GFI: GROUND FAULT INTERRUPTING TYPE RECEPTACLE
- E: RECEPTACLE CONNECTED TO EMERGENCY CIRCUIT. DEVICE SHALL BE RED WITH MATCHING COVERPLATE.
- WP: WEATHER RESISTANT GFI RECEPTACLE WITH WEATHERPROOF WHILE-IN USE COVER.
- C: RECEPTICAL MOUNTED FLUSH IN CEILING.

- DUPLEX CONVENIENCE RECEPTACLE 20A, 120V, 18" AFF, UON
- TWO DUPLEX RECEPTACLES IN COMMON BOX, EACH 20A, 120V, 18" AFF, UON
- PT — DEVICE MOUNTED IN FLUSH FLOOR BOX. SUBSCRIPT "PT", WHERE USED, INDICATES A FLUSH MOUNTED POKE-THRU DEVICE. PROVIDE 1-1/4"C WITH PULL STRING STUBBED ABOVE ACCESSIBLE CEILING FOR TELE/DATA CABLING.
- GFI — HEAT TAPE CONNECTION, CLASS B GFI DEVICE WITH PUSH TO TEST AND RESET BUTTONS WITH WEATHER PROOF COVER. CONNECT AHEAD OF HEAT TRACE THERMOSTAT.
- XXX-# — MECHANICAL UNIT CONNECTION - SEE SCHEDULE. "XXX" INDICATES UNIT TYPE. "#" INDICATES UNIT NUMBER.
- DDC — DIRECT DIGITAL CONTROL PANEL
- E — EQUIPMENT CONNECTION
- J — JUNCTION BOX
- MOTOR CONNECTION
- S_M — MOTOR RATED SWITCH WITH THERMAL OVERLOADS 20A, 120V, UON, MOUNTED WITHIN SIGHT OF MOTOR.
- SAFETY SWITCH, 60A-3P, FU @ 30A, 3R
  - SWITCH RATING
  - NUMBER OF POLES
  - FUSE RATING (NF INDICATES NON-FUSED)
  - NEMA ENCLOSURE IF OTHER THAN NEMA 1
- INTEGRAL DISCONNECT
- ENCLOSED CIRCUIT BREAKER, 60A-3P, 3R
  - BREAKER TRIP RATING
  - NUMBER OF POLES
  - NEMA ENCLOSURE IF OTHER THAN NEMA 1
- PS-# — PUMP STATION ELECTRICAL CONNECTION - SEE SCHEDULE. # INDICATED UNIT NUMBER. COORDINATE ALL CONNECTION REQUIREMENTS AND CHARACTERISTICS WITH CIVIL DRAWINGS AND EQUIPMENT PROVIDED PRIOR TO ROUGH-IN.
- VS — PLUMBING VALVE WITH SENSOR. COORDINATE EXACT CONNECTION REQUIREMENTS WITH PLUMBING CONTRACTOR.

POWER (CONT.)

- MAGNETIC MOTOR STARTER, MOUNT WITHIN SITE OF MOTOR 5'-0" AFF MAX, UON.
- SPD — SURGE PROTECTIVE DEVICE
- ELECTRICAL PANELBOARD
- T — DRY-TYPE TRANSFORMER
- T — PAD MOUNTED TRANSFORMER
  - INDICATES FRONT
- AND — ELECTRICAL CIRCUIT RUN IN CONDUIT AND CIRCUIT HOMERUN TO PANELBOARD (PANEL AND CIRCUIT DESIGNATION AS INDICATED). AS A MINIMUM CONDITION, EACH SINGLE PHASE CIRCUIT SHALL HAVE 1 #12 PHASE CONDUCTOR, 1 #12 NEUTRAL CONDUCTOR AND 1 #12 GROUNDING CONDUCTOR IN 1/2" CONDUIT. PROVIDE ADDITIONAL PHASE CONDUCTORS AS REQUIRED FOR "MULTIPLE PHASED" ELECTRICAL LOADS. PROVIDE NEUTRAL CONDUCTOR TO ALL WALL SWITCH OUTLET BOXES WHETHER REQUIRED OR NOT. PROVIDE ADDITIONAL "SWITCH LEG" CONDUCTORS TO PROVIDE THE LIGHT FIXTURE CONTROL INDICATED. MULTIPLE SINGLE PHASE CONDUCTORS MAY BE GROUPED TOGETHER IN A COMMON CONDUIT IN ACCORDANCE WITH THE NEC AND AT THE CONTRACTOR'S DISCRETION. GROUNDING CONDUCTORS MAY BE SHARED AS ALLOWED BY THE NEC. NEUTRAL CONDUCTORS SHALL NOT BE SHARED. MULTI-POLE BREAKERS SHALL BE PROVIDED IN ACCORDANCE WITH THE NEC WHERE MULTI-WIRE BRANCH CIRCUITS ARE REQUIRED. CONDUIT LARGER THAN 1/2" AND CONDUCTORS LARGER THAN #12 SHALL BE AS INDICATED.
- PB — PULL BOX DIRECT BURIED, TOP FLUSH WITH GRADE, REFER TO DETAIL ON SHEET E-501.

TELECOMMUNICATIONS

- TELE/DATA OUTLET, 4"X4"X2 1/8"D BOX WITH SINGLE GANG PLASTER RING AND SINGLE GANG COVERPLATE TO MATCH ELECTRICAL OUTLET COVERPLATE MATERIAL AND COLOR, 18" AFF, UON, WITH 1"C WITH PULL STRING, STUBBED ABOVE ACCESSIBLE CEILING AND TERMINATED WITH BUSHING. WHERE OUTLET IS ADJACENT TO A POWER RECEPTACLE, MOUNT AT SAME ELEVATION AS POWER RECEPTACLE, UON.
- PB^C — PULLBOX, DIRECT BURIED, FIBERGLASS SUBSCIPT "C" INDICATES COMMUNICATIONS PULLBOX SEE PULLBOX DETAIL ON SHEET E-501
- TELECOMMUNICATIONS BACKBOARD - 4'W x 8'H x 3/4"THICK TYPE AC FIRE RETARDANT
- PBB — PRIMARY BONDING BUSBAR, SEE DETAIL ON SHEET E-501 FOR ADDITIONAL INFORMATION
- —UGC—UGC— UNDERGROUND CONDUIT, CONCRETE ENCASED

GENERAL

- DETAIL OR SECTION NOTATION
  - ENUMERATION: A = DETAIL, 1 = SECTION
  - SHEET WHERE SECTION IS SHOWN
  - SHEET WHERE SECTION IS CUT
- 1 — NEW WORK NOTE SYMBOL
- 1 — DEMOLITION NOTE SYMBOL
- 1 HOUR FIRE RATED WALL

ABBREVIATIONS

A	AMPERE
AFF	ABOVE FINISHED FLOOR
AFG	ABOVE FINISHED GRADE
AHU	AIR HANDLING UNIT
AIC	AMPERE INTERRUPTING CAPACITY
AWG	AMERICAN WIRE GAUGE
BFG	BELOW FINISHED GRADE
C	CONDUIT
DDC	DIRECT DIGITAL CONTROL
DSS	DUCTLESS SPLIT SYSTEM
EBU	EMERGENCY BATTERY UNIT
EC	EMPTY CONDUIT
EF	EXHAUST FAN
EWC	ELECTRIC WATER COOLER
FLA	FULL LOAD AMPS
GFI	GROUND FAULT INTERRUPTER
GND	GROUND
HP	HORSE POWER/HEAT PUMP
IBC	INTERNATIONAL BUILDING CODE
KAIC	THOUSAND AMPERE INTERRUPTING CAPACITY
KVA	KILO-VOLT-AMPERES
KW	KILO-WATTS
LRP	LIGHTING RELAY PANEL
MAU	MAKE-UP AIR UNIT
MCA	MINIMUM CIRCUIT AMPS
MCB	MAIN CIRCUIT BREAKER
MIN	MINIMUM
MLO	MAIN LUGS ONLY
MOCP	MAXIMUM OVER-CURRENT PROTECTION
MTD	MOUNTED
NEC	NATIONAL ELECTRICAL CODE
NF	NON-FUSED
NFPA	NATIONAL FIRE PROTECTION ASSOCIATION
NIC	NOT IN CONTRACT
OC	ON CENTER
P	POLE
PNL	PANEL
Ø	PHASE
PRI	PRIMARY
PVC	POLYVINYL CHLORIDE
SCH	SCHEDULE
SE	SERVICE ENTRANCE
SEC	SECONDARY
SPD	SURGE PROTECTION DEVICE
SS	SPECIAL SYSTEMS
TBB	TELEPHONE BACKBOARD
TGB	TELECOMMUNICATIONS GROUNDING BAR
TMGB	TELECOMMUNICATIONS MAIN GROUNDING BAR
TYP	TYPICAL
UGC	UNDERGROUND CONDUIT
UON	UNLESS OTHERWISE NOTED
V	VOLT
W	WATTS/WIRE
WH	WATER HEATER
WP	WEATHERPROOF

EMERGENCY RESPONDER RADIO COVERAGE NOTE:

PROVIDE A COMPLETE RADIATING CABLE SYSTEM CONSISTING OF COAXIAL CABLE OR EQUIVALENT ABOVE ACCESSIBLE CEILINGS (PREFERABLY CORRIDORS) TO PROVIDE A SUPPORTING CABLE INFRASTRUCTURE FOR THE ADDITION OF A BUILDING DISTRIBUTION AMPLIFIER TO PERPETUATE CONTINUOUS EMERGENCY COMMUNICATION WITHIN THE BUILDING(S). THE CONTRACTOR SHALL BE RESPONSIBLE FOR PROVIDING THE CABLE EVERYWHERE NECESSARY TO ENSURE ADEQUATE COMMUNICATION IS ATTAINED IN ALL AREAS OF THE BUILDING(S). A 4' X 4' SPACE ON THE TELEPHONE BACKBOARD(S) SHALL BE ALLOCATED IN THE MAIN TELECOMMUNICATIONS DISTRIBUTION LOCATION(S) FOR THE AMPLIFIER AND ALL CABLE WILL BE RUN BACK TO THIS LOCATION. CONTRACTOR SHALL ALSO BE RESPONSIBLE FOR PROVIDING A PATHWAY (1"C MINIMUM) FROM THE AMPLIFIER LOCATION TO THE ROOF (THROUGH A PITCH POCKET) FOR A RADIO SYSTEMS ANTENNA. CONTRACTOR SHALL ENGAGE THE SERVICES OF A QUALIFIED RADIO COMMUNICATIONS CONTRACTOR TO PROVIDE A COMPLETE DESIGN. DESIGN, INSTALLATION, AND MEET SECTION 510 OF THE NC STATE FIRE CODE SECTION 916 OF THE NC STATE BUILDING CODE.

PRIOR TO AMPLIFIER INSTALLATION (AFTER WALLS ARE CONSTRUCTED), THE GENERAL CONTRACTOR SHALL COMMISSION A TEST OF THE EMERGENCY RESPONDER FREQUENCY BANDS BY A QUALIFIED TESTING AGENCY. SHOULD THE SIGNALS BE FOUND TO BE SUFFICIENT, THE AMPLIFIER, ANTENNA AND ANY OTHER UNINSTALLED SYSTEM EQUIPMENT SHALL NOT BE INSTALLED AND A CORRESPONDING CREDIT BE ISSUED TO THE OWNER.

WALKER the GROUP ARCHITECTURE incorporated
PO BOX 541, NEW BERN, NC 28563
252-636-8778

NORTH CAROLINA PROFESSIONAL SEAL 053623 ENGINEER KEVEN P. MEARS

CRAVEN COMMUNITY COLLEGE-PUBLIC SAFETY TRAINING CENTER

525 Executive Pkwy
New Bern, NC 28562

BID DOCUMENTS

SCO # 24-27879-01A

Revisions

No.	Date

Project Number 2407.SAFE	Date 07/28/25
Drawn BWS	Checked JEB
Scale AS NOTED	

Drawing Title

LEGEND, NOTES AND ABBREVIATIONS

Sheet Number
Of 157

Drawing Number
E-001

Pace COLLABORATIVE
MECHANICAL ELECTRICAL ENGINEERS
WWW.PACE-ENGINEERING.COM

NOTES THIS SHEET

1. CIRCUIT VIA LIGHTING RELAY PANEL "LRP-2"
2. REFER TO "DUCTBANK TRENCH DETAIL TYPE A (PAVEMENT) - COMM" AND "DUCTBANK TRENCH DETAIL TYPE A (SOIL) - COMM" ON SHEET E-501 FOR ADDITIONAL INFORMATION AS APPLICABLE.
3. CIRCUIT VIA LIGHTING RELAY PANEL "LRP-1"
4. LIGHT FIXTURES, ASSOCIATED POLES, CONCRETE BASES, CONDUIT AND WIRE SHALL BE PROVIDED AS PART OF "BID ALTERNATE 04". REFER TO SHEET GI001 FOR BID ALTERNATE DETAILS.

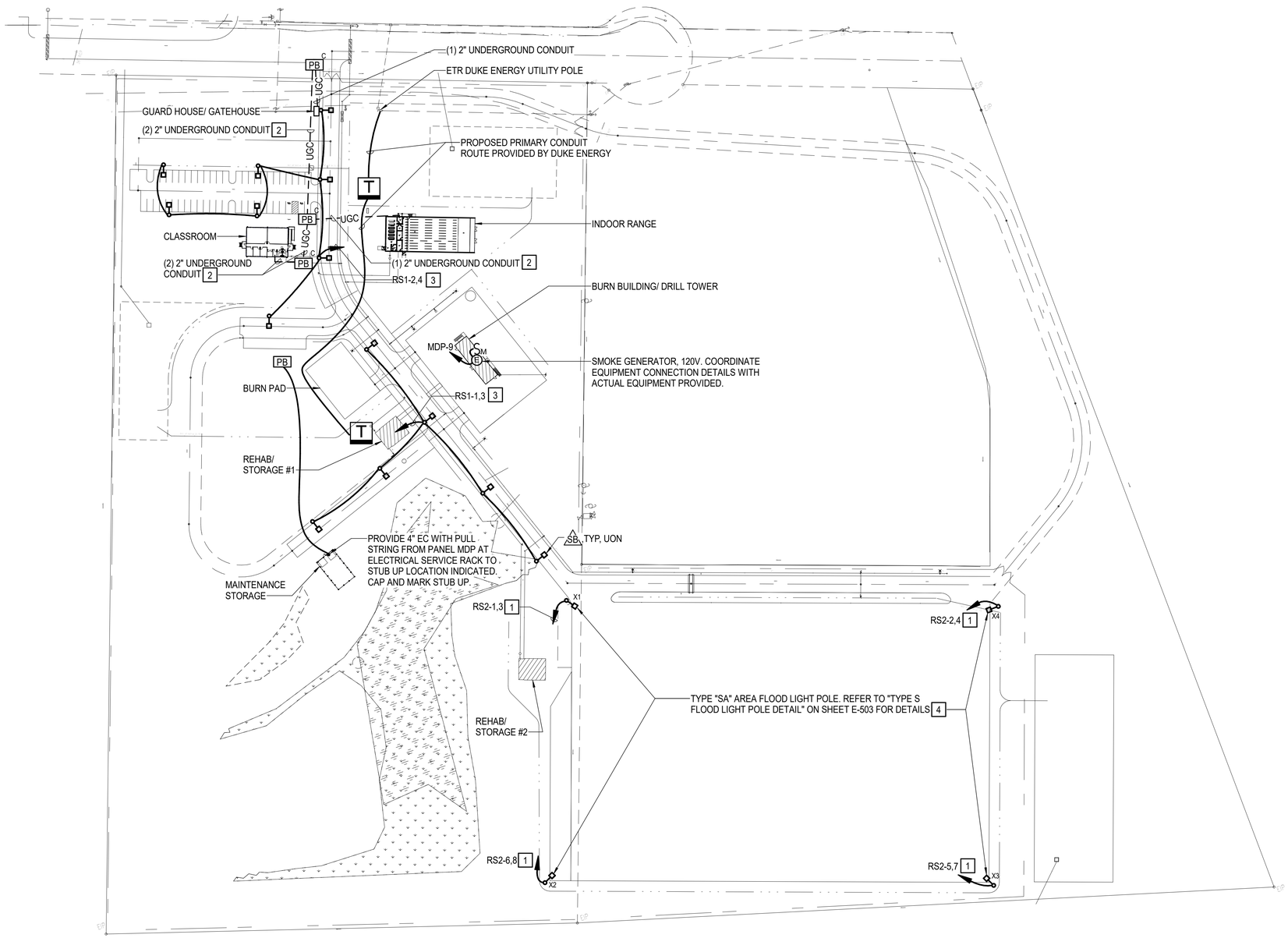

SITE PLAN

SCALE: 1" = 80'-0"

BID ALTERNATES:

WORK SHOWN ON THIS SHEET IS ASSOCIATED WITH MULTIPLE BID ALTERNATES. REFER TO SHEET GI001 SECTION "ADDITIVE BID ALTERNATES" FOR ADDITIONAL INFORMATION.

GRAPHIC SCALE(S)

1" = 80'-0" — 80' 40' 0' 80' 160' 240'

WALKER the GROUP ARCHITECTURE incorporated
PO BOX 541, NEW BERN, NC 28563
252-636-8778

NORTH CAROLINA PROFESSIONAL SEAL 053623 ENGINEER KEVEN P. MEARS

CRAVEN COMMUNITY COLLEGE- PUBLIC SAFETY TRAINING CENTER

525 Executive Pkwy
New Bern, NC 28562

BID DOCUMENTS

SCO # 24-27879-01A

No.	Date	Revisions

Project Number 2407.SAFE	Date 07/28/25
Drawn BWS	Checked JEB
Scale AS NOTED	

Drawing Title

SITE PLAN

Sheet Number

Of 157

Drawing Number

E-002

Pace COLLABORATIVE MECHANICAL ELECTRICAL ENGINEERS WWW.PACE-ENGINEERING.COM

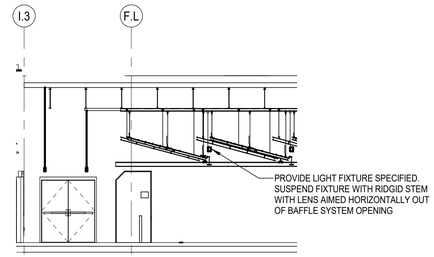

2 / E-101 TYPICAL FIRING RANGE LIGHT FIXTURE MOUNTING DETAIL.
SCALE: 1/8" = 1'-0"

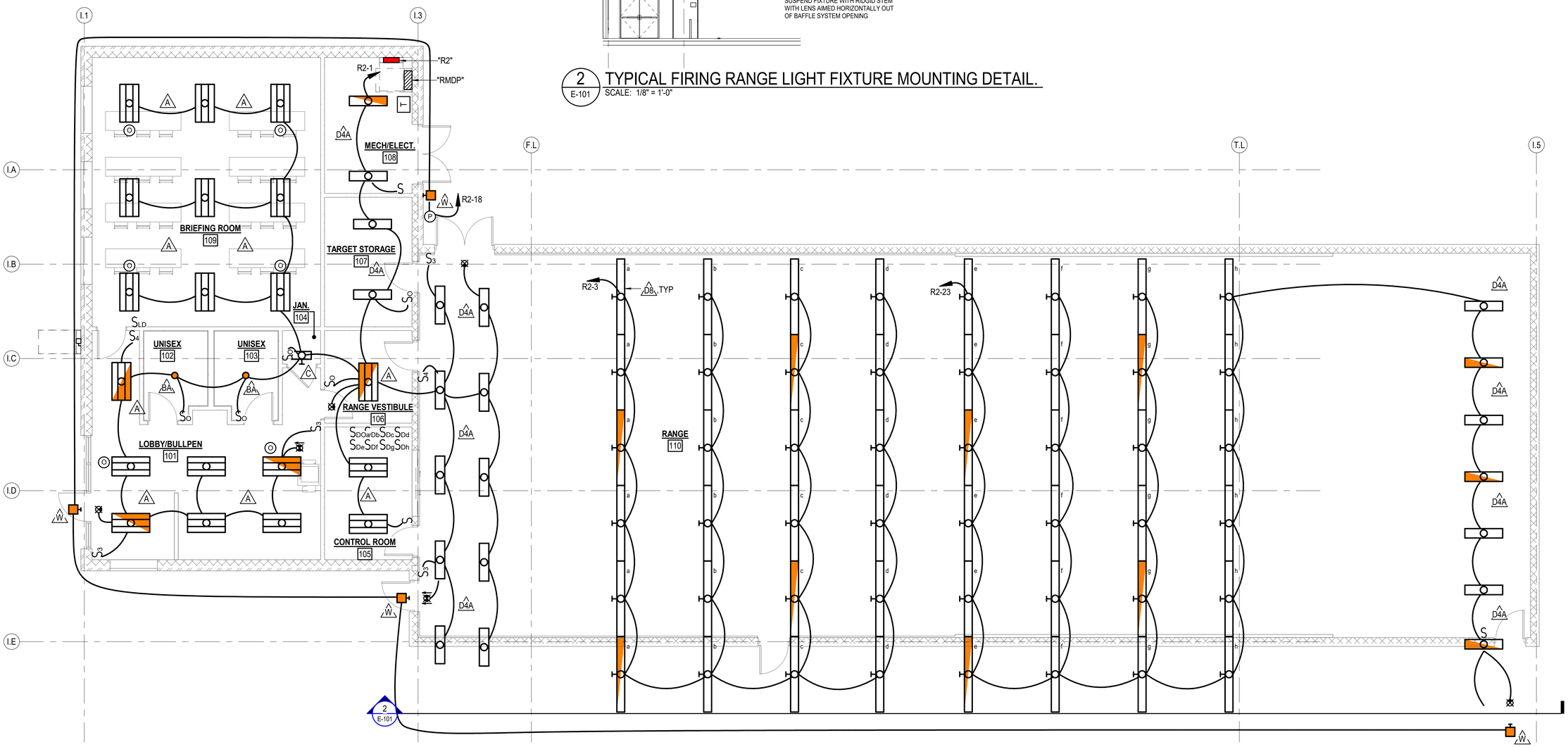

INDOOR RANGE LIGHTING PLAN
SCALE: 3/16" = 1'-0"

BID ALTERNATE 06:

WORK SHOWN ON THIS SHEET IS ASSOCIATED WITH BID ALTERNATE 06. REFER TO SHEET GI001 SECTION "ADDITIVE BID ALTERNATES" FOR ADDITIONAL INFORMATION.

PACE COLLABORATIVE
MECHANICAL ELECTRICAL ENGINEERS
WWW.PACE-ENGINEERING.COM

GRAPHIC SCALE(S)

3/16" = 1'-0" 0' 5' 10' 20'

1/8" = 1'-0" 5' 0' 5' 10' 20'

WALKER the GROUP ARCHITECTURE incorporated
PO BOX 541, NEW BERN, NC 28563
252-636-8778

NORTH CAROLINA PROFESSIONAL SEAL 053623 ENGINEER KEVEN P. MEARS

CRAVEN COMMUNITY COLLEGE- PUBLIC SAFETY TRAINING CENTER

525 Executive Pkwy
New Bern, NC 28562

BID DOCUMENTS

SCO # 24-27879-01A

Revisions

No.	Date

Project Number: 2407.SAFE
Date: 07/28/25
Drawn: BWS
Checked: JEB
Scale: AS NOTED

Drawing Title
INDOOR RANGE LIGHTING PLAN

Sheet Number
of 157

Drawing Number
E-101

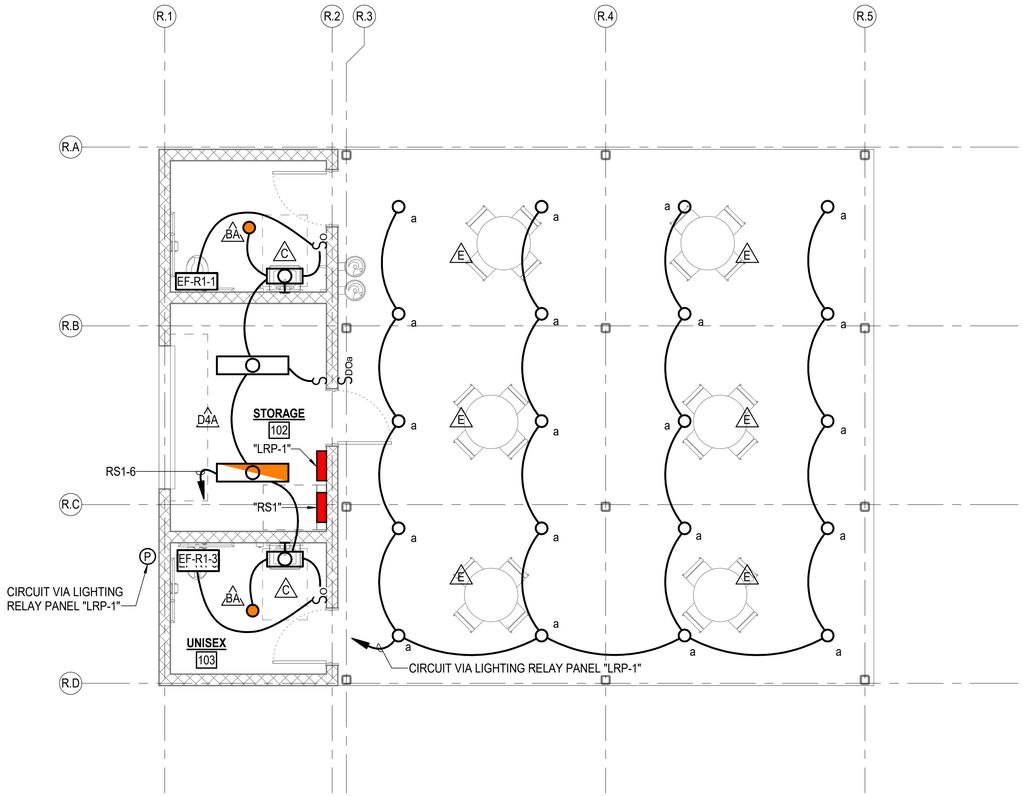

REHAB SHELTER 1 LIGHTING PLAN
SCALE: 1/4" = 1'-0"

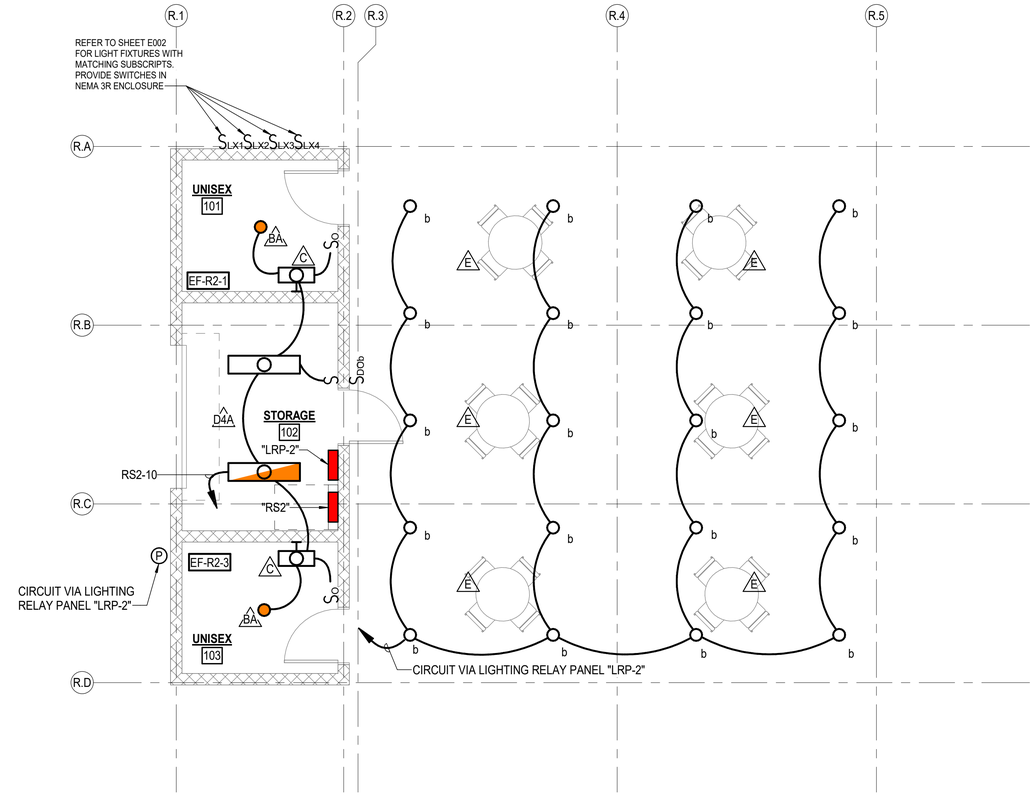

REHAB SHELTER 2 LIGHTING PLAN
SCALE: 1/4" = 1'-0"

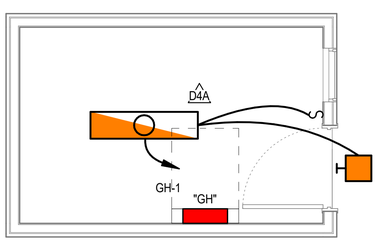

GATEHOUSE LIGHTING PLAN
SCALE: 3/8" = 1'-0"

BID ALTERNATES 03 AND 05:

WORK SHOWN ON THIS SHEET IS ASSOCIATED WITH BID ALTERNATES 03 AND 05. REFER TO SHEET GI001 SECTION "ADDITIVE BID ALTERNATES" FOR ADDITIONAL INFORMATION.

GRAPHIC SCALE(S)

1/4" = 1'-0" 5' 0' 5' 10'

3/8" = 1'-0" 1' 0' 1' 2' 3' 4' 5' 10'

WALKER the GROUP ARCHITECTURE incorporated
PO BOX 541, NEW BERN, NC 28563
252-636-8778

NORTH CAROLINA PROFESSIONAL SEAL 053623 ENGINEER KEVEN P. MEARS

CRAVEN COMMUNITY COLLEGE- PUBLIC SAFETY TRAINING CENTER

525 Executive Pkwy
New Bern, NC 28562

BID DOCUMENTS

SCO # 24-27879-01A

No.	Date	Revisions

Project Number: 2407.SAFE
Date: 07/28/25
Drawn: BWS
Checked: JEB
Scale: AS NOTED

Drawing Title
LIGHTING FLOOR PLANS

Sheet Number
Of 157

Drawing Number
E-102

Pace COLLABORATIVE MECHANICAL ELECTRICAL ENGINEERS WWW.PACE-ENGINEERING.COM

NOTES THIS SHEET

1. (1) 2" C., SCHEDULE 40 PVC WITH PULL STRING TO PULLBOX, REFER TO SITE PLAN, SHEET E-002 FOR ADDITIONAL INFORMATION.
2. PROVIDE (1) 1-1/4"C. WITH PULL STRING. INSTALL CONDUIT IN SLAB TO NEAREST WALL, TURN UP CONCEALED IN WALL TO ABOVE ACCESSIBLE CEILING AND TERMINATE WITH BUSHINGS.
3. EQUIPMENT LOCATED ON ROOF.
4. DEVICE TO BE MOUNTED ABOVE CEILING BAFFLES, COORDINATE WITH OWNER FOR EXACT LOCATION PRIOR TO INSTALLATION.
5. DEVICE FOR MONITORING OF DDC, COORDINATE WITH MECHANICAL CONTRACTOR FOR EXACT MOUNTING LOCATION PRIOR TO INSTALLATION.

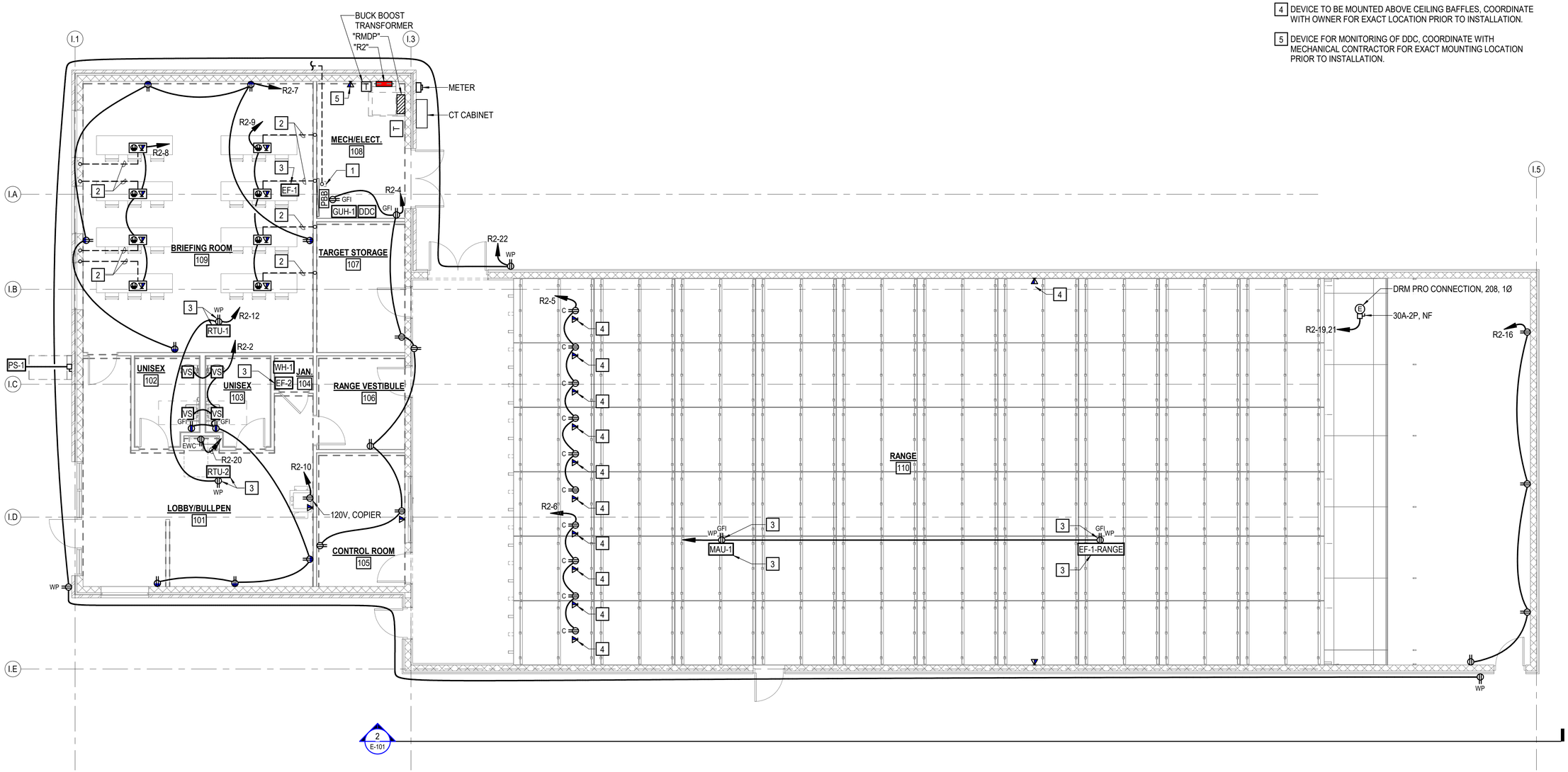

INDOOR RANGE POWER AND SPECIAL SYSTEMS FLOOR PLAN

SCALE: 3/16" = 1'-0"

ELECTRICAL CONNECTION SCHEDULE - INDOOR RANGE

TAG	MCA	kW / HP	FLA	VOLTAGE	Ø	MOCP	CKT	DISCONNECT	NOTES
RTU-1	14	-	11.2 A	480 V	3Ø	20	RMDP-2,4,6	30A-2P, FU@20A, 3R	1
RTU-2	11	-	8.8 A	480 V	3Ø	15	RMDP-7,9,11	30A-2P, FU@15A, 3R	1
EF-1	-	1/8 HP	3 A	120 V	1Ø	-	R2-11	INTEGRAL DISCONNECT	1
EF-2	-	1/6HP	4.4 A	120 V	1Ø	-	R2-13	INTEGRAL DISCONNECT	1
DDC	-	-	3 A	120 V	1Ø	-	R2-25	30A-2P,NF	1
EF-1-RANGE	-	60 HP	77 A	480 V	3Ø	-	RMDP-13,15,17	200A-3P, FU@150A, 3R	1
GUH-1	-	-	1 A	120 V	1Ø	-	R2-14	-	1
MAU-1	191	-	183 A	480 V	3Ø	200	R2-24,26	200A-3P, FU@200A, 3R	1
PS-1	-	2 HP	12 A	240 V	1Ø	-	Buck boost-1	30A-2P,NF	1
NOTES: I-1	-	3KW	14.4 A	208 V	1Ø	-	R2-15,17	30A-2P,NF	1

1. COORDINATE ALL CONNECTIONS TO EQUIPMENT WITH MECHANICAL SUB-CONTRACTOR AND APPROVED SHOP DRAWINGS.
2. PROVIDE WITH 208V - 240V BUCK BOOST TRANSFORMER.

BID ALTERNATE 06:

WORK SHOWN ON THIS SHEET IS ASSOCIATED WITH BID ALTERNATE 06. REFER TO SHEET GI001 SECTION "ADDITIVE BID ALTERNATES" FOR ADDITIONAL INFORMATION.

GRAPHIC SCALE(S)

3/16" = 1'-0" 0' 5' 10' 20'

WALKER the GROUP ARCHITECTURE incorporated
PO BOX 541, NEW BERN, NC 28563
252-636-8778

NORTH CAROLINA PROFESSIONAL SEAL 053623 ENGINEER KEVEN P. MEARS

CRAVEN COMMUNITY COLLEGE- PUBLIC SAFETY TRAINING CENTER

525 Executive Pkwy
New Bern, NC 28562

BID DOCUMENTS

SCO # 24-27879-01A

Revisions

No.	Date

Project Number: 2407.SAFE
Date: 07/28/25
Drawn: BWS
Checked: JEB
Scale: AS NOTED

Drawing Title

POWER AND SS FLOOR PLAN & SCHEDULES

Sheet Number
Of 157

Drawing Number

E-201

Pace COLLABORATIVE
MECHANICAL ELECTRICAL ENGINEERS
WWW.PACE-ENGINEERING.COM

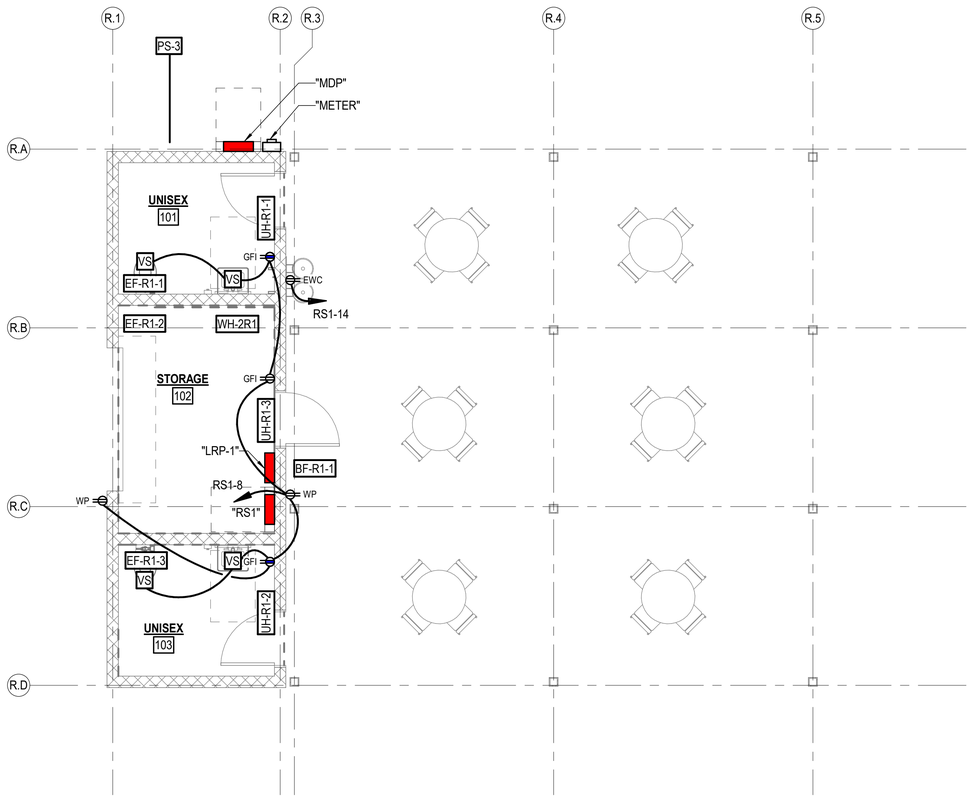

REHAB SHELTER 1 POWER PLAN
SCALE: 1/4" = 1'-0"

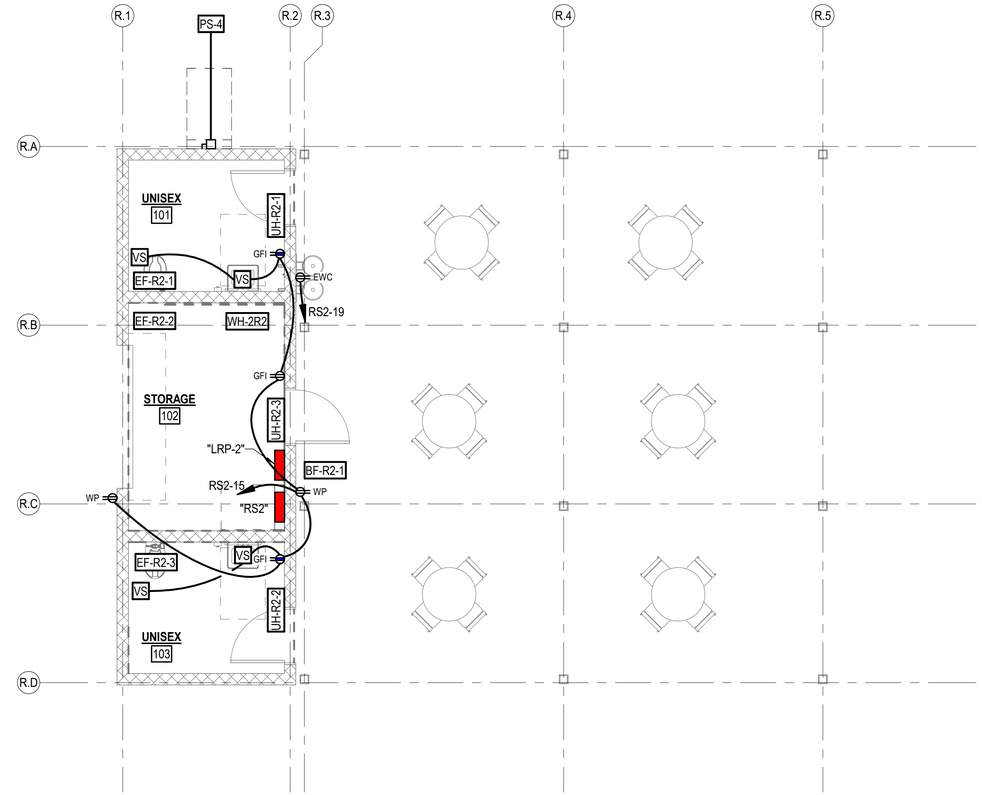

REHAB SHELTER 2 POWER PLAN
SCALE: 1/4" = 1'-0"

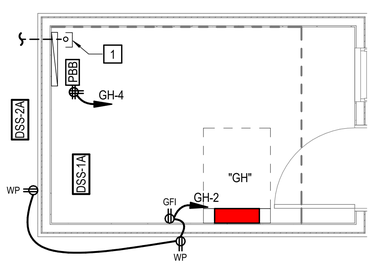

GATEHOUSE POWER AND SPECIAL SYSTEMS PLAN
SCALE: 3/8" = 1'-0"

ELECTRICAL CONNECTION SCHEDULE - REHAB SHELTER 1

TAG	MCA	kW / HP	FLA	VOLTAGE	Ø	MOCP	CKT	DISCONNECT	NOTES
BF-R1-1	-	1/2 HP	9.8 A	120 V	1Ø	-	RS1-12	30A-2P,NF	1
UH-R1-1	-	-	7.5 A	120 V	1Ø	-	RS1-5	MOTOR RATED SWITCH	1
UH-R1-2	-	-	7.5 A	120 V	1Ø	-	RS1-7	MOTOR RATED SWITCH	1
UH-R1-3	-	-	10.4 A	120 V	1Ø	-	RS1-9	MOTOR RATED SWITCH	1
EF-R1-1	-	-	0.1 A	120 V	1Ø	-	RS1-6	INTEGRAL DISCONNECT	1
EF-R1-2	-	-	0.1 A	120 V	1Ø	-	RS1-10	INTEGRAL DISCONNECT	1
EF-R1-3	-	-	0.2 A	120 V	1Ø	-	RS1-6	INTEGRAL DISCONNECT	1
PS-3	-	2 HP	12 A	240 V	1Ø	-		30A-2P,NF	1
WH-2R1	-	2KW	8.3 A	240 V	1Ø	-	RS1-11,13	30A-2P,NF	1

NOTES:
1. COORDINATE ALL CONNECTIONS TO EQUIPMENT WITH MECHANICAL SUB-CONTRACTOR AND APPROVED SHOP DRAWINGS.

ELECTRICAL CONNECTION SCHEDULE - REHAB SHELTER 2

TAG	MCA	kW / HP	FLA	VOLTAGE	Ø	MOCP	CKT	DISCONNECT	NOTES
BF-R2-1	-	1/2 HP	9.8 A	120 V	1Ø	-	RS2-18	30A-2P,NF	1
UH-R2-1	-	-	7.5 A	120 V	1Ø	-	RS2-11	MOTOR RATED SWITCH	1
UH-R2-2	-	-	7.5 A	120 V	1Ø	-	RS2-13	MOTOR RATED SWITCH	1
UH-R2-3	-	-	10.4 A	120 V	1Ø	-	RS2-17	MOTOR RATED SWITCH	1
EF-R2-1	-	-	0.1 A	120 V	1Ø	-	RS2-10	INTEGRAL DISCONNECT	1
EF-R2-2	-	-	0.1 A	120 V	1Ø	-	RS2-12	INTEGRAL DISCONNECT	1
EF-R2-3	-	-	0.2 A	120 V	1Ø	-	RS2-10	INTEGRAL DISCONNECT	1
PS-4	-	2 HP	12 A	240 V	1Ø	-		30A-2P,NF	1
WH-2R2	-	2KW	8.3 A	240 V	1Ø	-	RS2-14,16	30A-2P,NF	1

NOTES:
1. COORDINATE ALL CONNECTIONS TO EQUIPMENT WITH MECHANICAL SUB-CONTRACTOR AND APPROVED SHOP DRAWINGS.

ELECTRICAL CONNECTION SCHEDULE - GUARD HOUSE

TAG	MCA	kW / HP	FLA	VOLTAGE	Ø	MOCP	CKT	DISCONNECT	NOTES
DSS-1A	-	-	1 A	240 V	1Ø	-		30A-2P,NF	1,2
DSS-2A	11	-	8.8 A	240 V	1Ø	28	GH-3,5	30A-2P,NF, 3R	1,2

NOTES:
1. COORDINATE ALL CONNECTIONS TO EQUIPMENT WITH MECHANICAL SUB-CONTRACTOR AND APPROVED SHOP DRAWINGS.
2. INTERCONNECT DSS-1A (INDOOR UNIT) TO DSS-2A (OUTDOOR UNIT) PER MANUFACTURER'S RECOMMENDATIONS

NOTES THIS SHEET

1 (1) 2" C., SCHEDULE 40 PVC WITH PULL STRING TO PULLBOX, REFER TO SITE PLAN, SHEET E-002 FOR ADDITIONAL INFORMATION.

BID ALTERNATES 03 AND 05:

WORK SHOWN ON THIS SHEET IS ASSOCIATED WITH BID ALTERNATES 03 AND 05. REFER TO SHEET GI001 SECTION "ADDITIVE BID ALTERNATES" FOR ADDITIONAL INFORMATION.

GRAPHIC SCALE(S)

1/4" = 1'-0" 5' 0' 5' 10'

3/8" = 1'-0" 1' 0' 1' 2' 3' 4' 5' 10'

WALKER the GROUP ARCHITECTURE incorporated
PO BOX 541, NEW BERN, NC 28563
252-636-8778

NORTH CAROLINA PROFESSIONAL SEAL 053623 ENGINEER KEVEN P. MEARS

CRAVEN COMMUNITY COLLEGE- PUBLIC SAFETY TRAINING CENTER

525 Executive Pkwy
New Bern, NC 28562

BID DOCUMENTS

SCO # 24-27879-01A

Revisions

No.	Date

Project Number: 2407.SAFE
Date: 07/28/25
Drawn: BWS
Checked: JEB
Scale: AS NOTED

Drawing Title
POWER AND SS FLOOR PLANS & SCHEDULES

Sheet Number
Of 157

Drawing Number
E-202

Pace COLLABORATIVE
MECHANICAL ELECTRICAL ENGINEERS
WWW.PACE-ENGINEERING.COM

NOTES THIS SHEET

1. (2) 2" C., SCHEDULE 40 PVC WITH PULL STRING TO PULLBOX, REFER TO SITE PLAN, SHEET E-002 FOR ADDITIONAL INFORMATION.
2. MODULAR CLASSROOM PANEL FEEDER FROM PANELBOARD MDP. REFER TO RISER DIAGRAM FOR FEEDER DETAILS. COORDINATE EXACT PANEL CONNECTION LOCATION WITH CLASSROOM PROVIDER.

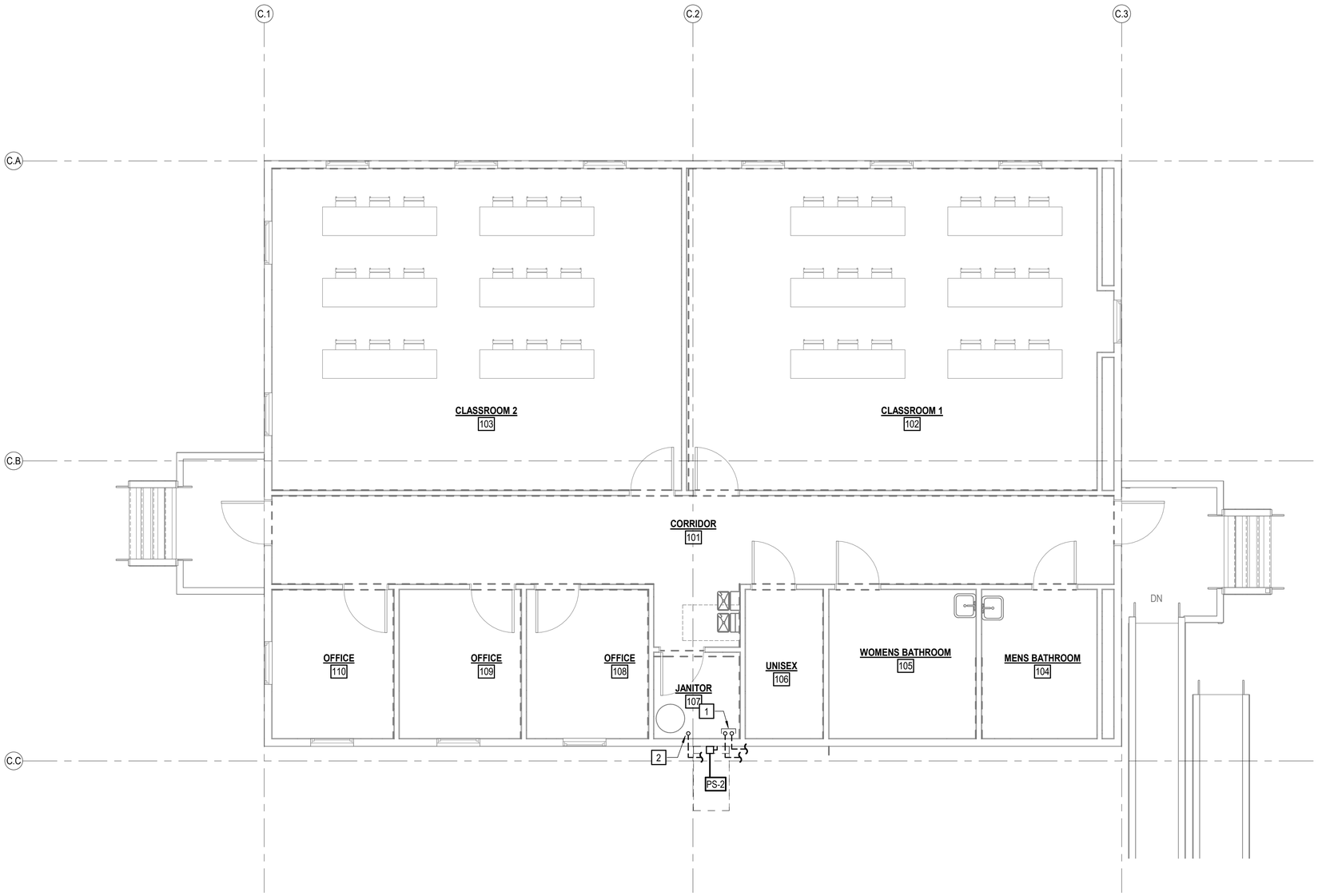

MODULAR CLASSROOM POWER AND SPECIAL SYSTEMS PLAN

SCALE: 1/4" = 1'-0"

ELECTRICAL CONNECTION SCHEDULE - PUMP STATION

TAG	MCA	kW / HP	FLA	VOLTAGE	Ø	MOCP	CKT	DISCONNECT	NOTES
PS-2	-	2 HP	12 A	240 V	1Ø	-		30A-2P,NF	1

BID ALTERNATE 02:

WORK SHOWN ON THIS SHEET IS ASSOCIATED WITH BID ALTERNATE 02. REFER TO SHEET GI001 SECTION "ADDITIVE BID ALTERNATES" FOR ADDITIONAL INFORMATION.

GRAPHIC SCALE(S)

1/4" = 1'-0" 5' 0' 5' 10'

WALKER the GROUP ARCHITECTURE incorporated
PO BOX 541, NEW BERN, NC 28563
252-636-8778

NORTH CAROLINA PROFESSIONAL SEAL 053623 ENGINEER KEVEN P. MEARS

CRAVEN COMMUNITY COLLEGE- PUBLIC SAFETY TRAINING CENTER

525 Executive Pkwy
New Bern, NC 28562

BID DOCUMENTS

SCO # 24-27879-01A

Revisions

No.	Date

Project Number: 2407.SAFE
Date: 07/28/25
Drawn: BWS
Checked: JEB
Scale: AS NOTED

Drawing Title

MODULAR CLASSROOM POWER & SS PLAN

Sheet Number
Of 157

Drawing Number
E-203

Pace COLLABORATIVE
MECHANICAL ELECTRICAL ENGINEERS
WWW.PACE-ENGINEERING.COM

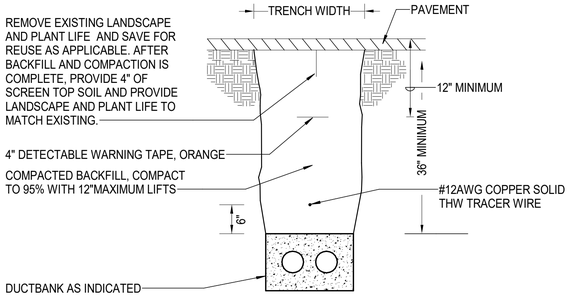

DUCTBANK TRENCH DETAIL TYPE A (PAVEMENT) - COMM

NO SCALE

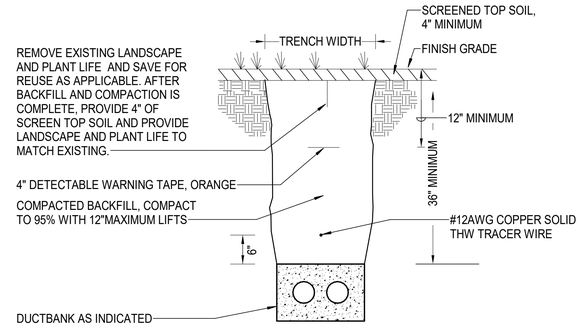

DUCTBANK TRENCH DETAIL TYPE A (SOIL) - COMM

NO SCALE

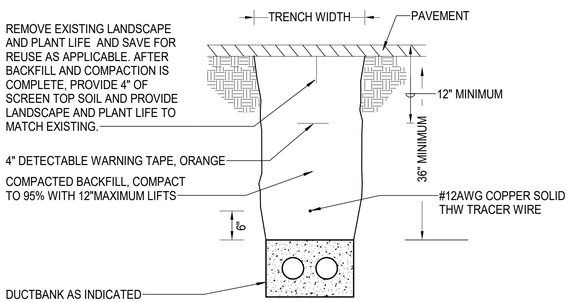

DUCTBANK TRENCH DETAIL TYPE A (PAVEMENT) - POWER

NO SCALE

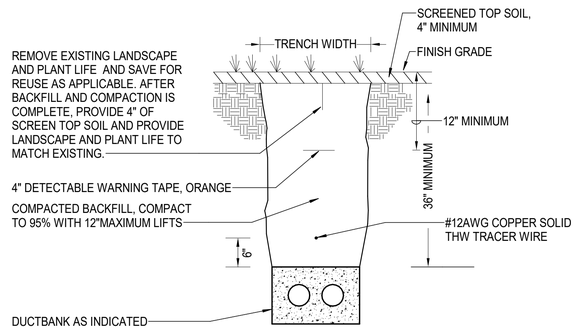

DUCTBANK TRENCH DETAIL TYPE A (SOIL) - POWER

NO SCALE

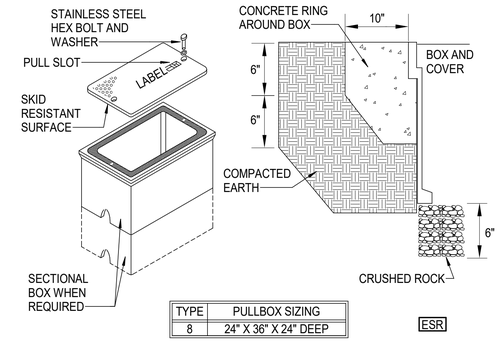

TYPE	PULLBOX SIZING
8	24" X 36" X 24" DEEP

ESR

PULLBOX REQUIREMENTS:

1. NOMINAL INSIDE DIMENSIONS: (18"W X 30L") X 24"D (BOX EXTENSIONS ARE ACCEPTABLE AS NECESSARY TO OBTAIN REQUIRED DEPTH).
2. CONSTRUCTED OF POLYMER CONCRETE OR REINFORCED FIBERGLASS.
3. LOAD DESIGN: 8000 LB LOAD OVER A 10" SQUARE.
4. STANDARD GREEN COLOR.

PULLBOX DETAIL

NO SCALE

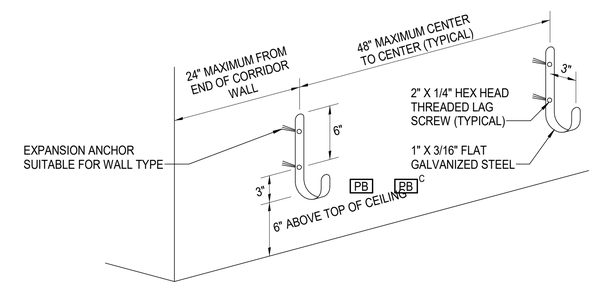

NOTE:

1. DO NOT EXCEED 80% OF THE MANUFACTURER'S MAXIMUM FILL CAPACITY. PROVIDE THIS INFORMATION WITHIN SUBMITTALS FOR VERIFICATION. PROVIDE ADDITIONAL TIERS AS REQUIRED TO ENSURE ALL CABLES ARE PROPERLY SUPPORTED.

J-HOOK CABLE MANAGEMENT DETAIL

NO SCALE

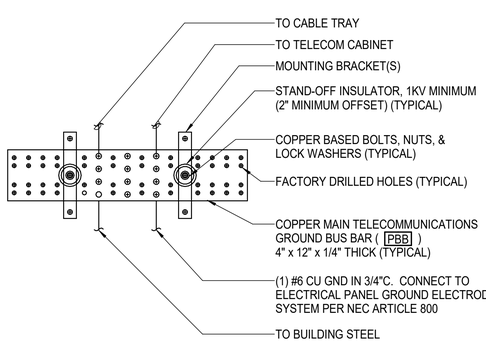

CONTRACTOR SHALL SIZE TELECOMMUNICATIONS GROUNDING AND BONDING INFRASTRUCTURE PER ANSI J-STD-607-E	
TBB/TBC LENGTH M (FT)	TBB/TBC SIZE (AWG)
LESS THAN 4 (13)	6
4 - 6 (14 - 20)	4
6 - 8 (21 - 26)	3
8 - 10 (27 - 33)	2
10 - 13 (34 - 41)	1
13 - 16 (42 - 52)	1/0
16 - 20 (53 - 66)	2/0
20 - 26 (67 - 84)	3/0
26 - 32 (85 - 105)	4/0
32 - 38 (106 - 125)	250kcmil
38 - 46 (126 - 150)	300kcmil
46 - 53 (151 - 175)	350kcmil
53 - 76 (176 - 250)	500kcmil
76 - 91 (251 - 300)	600kcmil
GREATER THAN 91 (301)	750kcmil
TBB - TELECOMMUNICATIONS BONDING BACKBONE TBC - TELECOMMUNICATIONS BONDING CONDUCTOR	

PRIMARY BONDING BUSBAR

NO SCALE

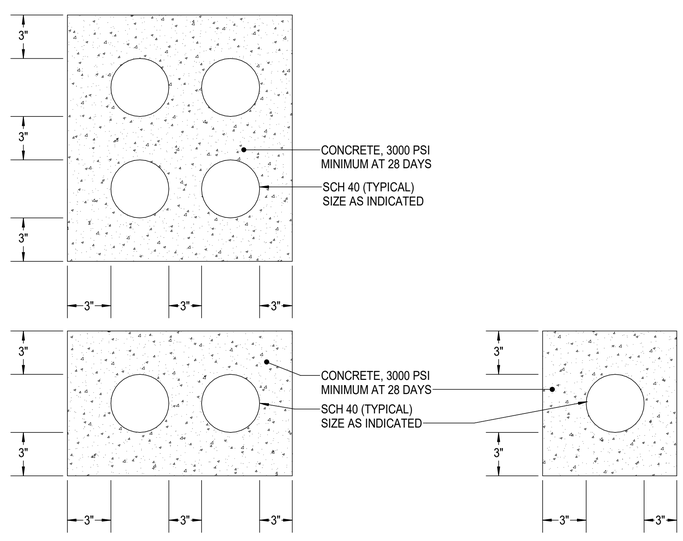

DUCTBANK DETAILS

NO SCALE

WALKER the GROUP ARCHITECTURE incorporated
PO BOX 541, NEW BERN, NC 28563
252-636-8778

NORTH CAROLINA PROFESSIONAL SEAL 053623 ENGINEER KEVEN P. MEARS

CRAVEN COMMUNITY COLLEGE- PUBLIC SAFETY TRAINING CENTER

525 Executive Pkwy
New Bern, NC 28562

BID DOCUMENTS

SCO # 24-27879-01A

No.	Date	Revisions

Project Number: 2407.SAFE
Date: 07/28/25
Drawn: BWS
Checked: JEB
Scale: AS NOTED
Drawing Title: **DETAILS**

Sheet Number: Of 157
Drawing Number: E-501

Pace COLLABORATIVE MECHANICAL ELECTRICAL ENGINEERS WWW.PACE-ENGINEERING.COM

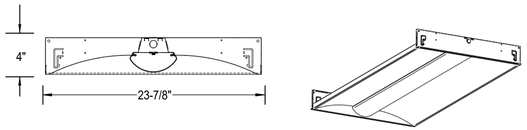

LUMINAIRE DESCRIPTION:

1. HOUSING SHALL BE DIE FORMED CODE GAUGE COLD ROLLED STEEL.
2. LENS SHALL BE CURVED ACRYLIC.
3. FINISH SHALL BE MATTE WHITE PAINT.
4. FIXTURE SHALL HAVE HIGH PERFORMANCE LED DRIVER.
5. FIXTURE SHALL BE UL LISTED, SUITABLE FOR DAMP LOCATIONS.
6. PROVIDE FIXTURE WITH 0-10VDC DIMMING TO 1%.
7. PROVIDE BATTERY BACK-UP WHERE INDICATED.

DETAIL BASED ON COLUMBIA LIGHTING, "LCAT24" SERIES

TYPE	LUMENS	LAMP TYPE	INPUT WATTS	VOLTAGE	MOUNTING
A	3,626	4000K LED	26.4	120	RECESSED, CEILING

LED RECESSED TROFFER

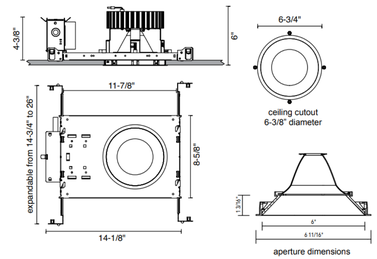

LUMINAIRE DESCRIPTION:

1. HOUSING SHALL BE 16 GAUGE COLD ROLLED STEEL.
2. PROVIDE REFLECTOR DIE-FORMED OF 0.40 LOW IRIDESCENT ALUMINUM AND SELF-FLANGED WITH 70° DISTRIBUTION.
3. FIXTURE TRIM AND BEZEL SHALL BE WHITE.
4. HIGH-EFFICIENCY, INTEGRAL ELECTRONIC LED DRIVER. PROVIDE WITH 0-10VDC DIMMING TO 10%.
5. FIXTURE SHALL BE UL LISTED, SUITABLE FOR DAMP LOCATION AND IC RATED.
6. PROVIDE BATTERY BACK-UP WHERE INDICATED.
7. FIXTURE TYPE BA SHALL BE ADJUSTABLE TYPE SUITABLE FOR SLANTED CEILINGS.

DETAIL BASED ON ALPHABET, "NU6RD" SERIES

TYPE	LUMENS	LAMP TYPE	INPUT WATTS	VOLTAGE	MOUNTING
BA	2,540	4000K LED	26	120	RECESSED, CEILING

RECESSED 6" LED OPEN DOWNLIGHT

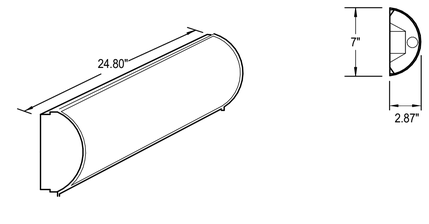

LUMINAIRE DESCRIPTION:

1. HOUSING SHALL BE PAINTED OR PLATED SOLID ALUMINUM WITH A 1/8" MATTE WHITE EXTRUDED ACRYLIC PANEL
2. FIXTURE SHALL UTILIZE AN ELECTRONIC DRIVER
3. THE LENS SHALL BE HIGH IMPACT PEARLESCENT ACRYLIC. SMOOTH EXTERIOR, LINEAR PRISMATIC INTERIOR. NOMINAL THICKNESS .156". LENS SHALL LOCK IN PLACE WITH TAMPER-RESISTANT STAINLESS STEEL POSIGRIP FASTENERS.
4. FIXTURE SHALL BE UL LISTED FOR DAMP LOCATIONS.

DETAIL BASED ON KENALL LIGHTING, "RHL7" SERIES

TYPE	LUMENS	LAMP TYPE	INPUT WATTS	VOLTAGE	MOUNTING
C	2,702	4000K LED	25	120	SURFACE MOUNT, WALL

2' LED VANITY

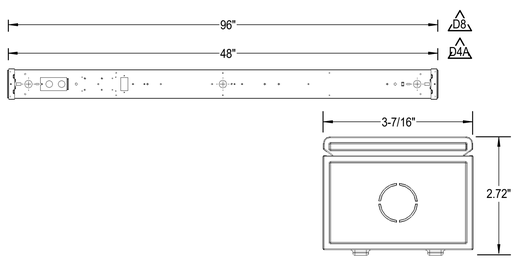

LUMINAIRE DESCRIPTION:

1. CHANNEL AND COVER ARE CODE GAUGE, COLD-ROLLED STEEL CONSTRUCTION. HOUSING AND LENS ENDOCARPS ARE MOLDED PLASTIC. FIXTURE SHALL HAVE A HIGH-GLOSS, BAKED, WHITE POLYESTER FINISH.
2. FIXTURE SHALL HAVE A FLAT DIFFUSE, ACRYLIC LENS.
3. LENS DRIVER SHALL BE STANDARD EFFICIENCY, ELECTRONIC, MULTIVOLT, DIMMABLE AT 0-10V, AND A MINIMUM OF CRI 80.
4. CSA CERTIFIED TO U.S. AND CANADIAN STANDARDS AND LISTED FOR USE IN DAMP LOCATIONS.
5. FIXTURE TYPE D4A SHALL BE 48"
6. FIXTURE TYPE D8 SHALL BE 96"

DETAIL BASED ON COLUMBIA LIGHTING, "MPS" SERIES

TYPE	LUMENS	LAMP TYPE	INPUT WATTS	VOLTAGE	MOUNTING
D4A	2,573	4000K LED	18.1	120	PENDANT MOUNTED CABLE AT 8'-0" AFF
D8	5,146	4000K LED	36.2	120	SURFACE, CEILING

LED LENSED STRIP

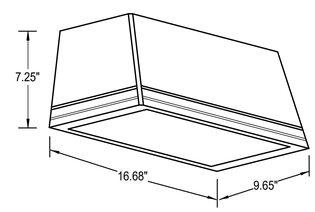

LUMINAIRE DESCRIPTION:

1. FIXTURE SHALL BE DIE-CAST ALUMINUM HOUSING.
2. FINISH SHALL BE SELECTED BY ARCHITECT.
3. FIXTURE SHALL HAVE TYPE IV DISTRIBUTION.
4. FIXTURE SHALL BE UL LISTED FOR WET LOCATIONS.
5. PROVIDE WITH BUTTON PHOTOCONTROL.
6. PROVIDE INTEGRAL BATTERY BACK-UP WHERE INDICATED. BATTERY BACK-UP SHALL HAVE INDEPENDENT SECONDARY DRIVER TO COMPLY WITH NEC 700.16

DETAIL BASED ON CURRENT LIGHTING, "TRP2" SERIES

TYPE	LUMENS	LAMP TYPE	INPUT WATTS	VOLTAGE	MOUNTING
W	4,233	4000K LED	32.1	120	SURFACE, WALL, 12'-0" AFG

LED WALLPACK

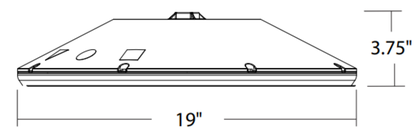

LUMINAIRE DESCRIPTION:

1. HOUSING SHALL BE DIE-CAST ALUMINUM.
2. LENS SHALL BE PRISMATIC ACRYLIC LENS.
3. DRIVER SHALL BE HIGH PERFORMANCE LED DRIVER.
4. FINISH SHALL POWDER COATED PAINTED.
5. FIXTURE SHALL BE IP 66 RATED.
6. PROVIDE FIXTURE WITH INTEGRAL MOTION SENSOR THAT DIMS THE TOTAL LIGHT OUTPUT OF THE FIXTURE BY 50%.

DETAIL BASED ON LITHONIA LIGHTING, "VCPG" SERIES

TYPE	LUMENS	LAMP TYPE	INPUT WATTS	VOLTAGE	MOUNTING
E	3,681	4000K LED	27	120/277	SURFACE, CEILING

PARKING GARAGE LIGHT

WALKER the GROUP ARCHITECTURE incorporated
PO BOX 541, NEW BERN, NC 28563
252-636-8778

NORTH CAROLINA PROFESSIONAL SEAL 053623 ENGINEER KEVEN P. MEARS

CRAVEN COMMUNITY COLLEGE-PUBLIC SAFETY TRAINING CENTER

525 Executive Pkwy
New Bern, NC 28562

BID DOCUMENTS

SCO # 24-27879-01A

Revisions

No.	Date

Project Number: 2407.SAFE
Date: 07/28/25
Drawn: BWS
Checked: JEB
Scale: AS NOTED
Drawing Title: **DETAILS**

Sheet Number
Of 157

Drawing Number
E-502

Pace COLLABORATIVE MECHANICAL ELECTRICAL ENGINEERS WWW.PACE-ENGINEERING.COM

LUMINAIRE DESCRIPTION:

1. ALUMINUM HOUSING WITH HIGH-POLISH, INJECTION-MOLDED VIRGIN ACRYLIC EDGE-LIT PANEL. GRADUATED DEPTH OF MOLDED LETTERS PROVIDES UNIFORM LIGHT DISTRIBUTION ON GRAPHICS.
2. 6" TALL LETTERS.
3. RED ILLUMINATION PROVIDED BY LIGHT EMITTING DIODES (LED).
4. DIRECTIONAL ARROWS AS INDICATED.
5. UNIVERSAL MOUNTING.
6. BRUSHED ALUMINUM AND CLEAR ACRYLIC FINISH.
7. POWER FAILURE PROTECTION, BROWN OUT PROTECTION AND SURGE PROTECTION.
8. SEALED MAINTENANCE FREE NICKEL CADMIUM BATTERY WITH SOLID STATE CHARGER, WITH OVERCHARGE PROTECTION.
9. TEST BUTTON IN BOTTOM OF HOUSING
10. INDICATOR LIGHTS IN FACE TO INDICATE WHEN UNIT IS ON NORMAL POWER OR ON BATTERY POWER.

INDICATES CEILING MOUNT.
INDICATES WALL MOUNT 6" ABOVE DOOR TO BOTTOM OF FIXTURE.

DETAIL BASED ON DUAL-LITE, "LE" SERIES

TYPE	LAMP TYPE	INPUT WATTS	VOLTAGE	MOUNTING
	LED	5	120/277	CEILING, WALL; UNIVERSAL MOUNT.

EDGE-LIT EXIT LIGHT

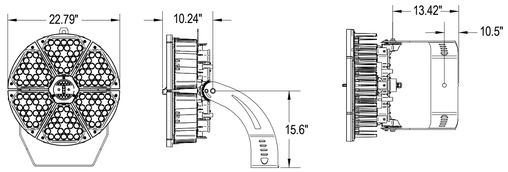

LUMINAIRE REQUIREMENTS:

1. HOUSING: DIE CAST ALUMINUM. ALL HARDWARE IS STAINLESS STEEL.
2. DRIVER: (1) REMOTE MOUNTED ENGINE WITH POWER FACTOR >90% AND THD <20%.
3. LEDS: MINIMUM CRI OF 70.
4. FINISH: UV STABILIZED POLYESTER POWDER COATING.
5. RATINGS: - 40ºC TO 25º OPERATING TEMPERATURE RANGE. 20KA SURGE PROTECTION. LISTED TO UL1598. TESTED IN ACCORDANCE WITH IESNA LM-79 AND LM-80 STANDARDS.
6. MOUNTING: PROVIDE WITH HEAVY DUTY YOKE MOUNT TO ALLOW FOR HORIZONTAL AND VERTICAL AIMING.
7. PROGRAMMING OF CONTROLS SHALL BE COORDINATED WITH OWNER'S REPRESENTATIVE.

DETAIL BASED ON BEACON LIGHTING, "TSL" SERIES

TYPE	LUMENS	LAMP TYPE	INPUT WATTS	VOLTS	MOUNTING
SA	90,000	4000K LED	740W	240	POLER MOUNTED. REFER TO ASSOCIATE POLE DETAIL FOR HEIGHT

SPORTS LIGHTING FIXTURE

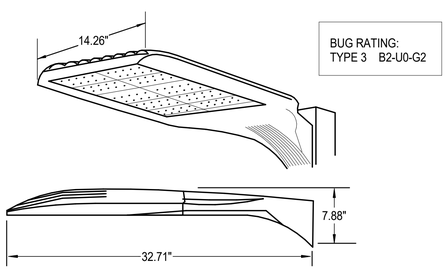

BUG RATING:
TYPE 3 B2-U0-G2

LUMINAIRE DESCRIPTION:

1. HOUSING: SINGLE PIECE DIE-CAST ALUMINUM.
2. DR1000MmA POWER FACTOR > 90% AND THD < 20%.
3. FIXTURE HAS 2 LIGHT ENGINES - 4000K, 70 CRI MOUNTED TO A METAL-CORE CIRCUIT BOARD AND ALUMINUM HEAT SINK.
4. REFLECTOR: FORMED ANODIZED ALUMINUM.
5. OPTICS: PRECISION-MOLDED ACRYLIC LENSES.
6. FINISH: ELECTROSTATIC POWDER COATING. FINISH COLOR SHALL BE BLACK.
7. RATINGS: UL LISTED FOR WET LOCATIONS. EPA: 1.2, ENCLOSURE CLASSIFIED IP66 PER IEC 529 AND TESTED IN ACCORDANCE WITH IESNA LM-79 AND LM-80 STANDARDS.

DETAIL BASED ON LITHONIA, "DSX2 60C1000 LED" SERIES

TYPE	LUMENS	DISTRIBUTION TYPE	INPUT WATTS	VOLTAGE	MOUNTING
SB	26,597	TYPE III	179	120/240V	POLE MOUNTED, 25' AFG

LED AREA FIXTURE

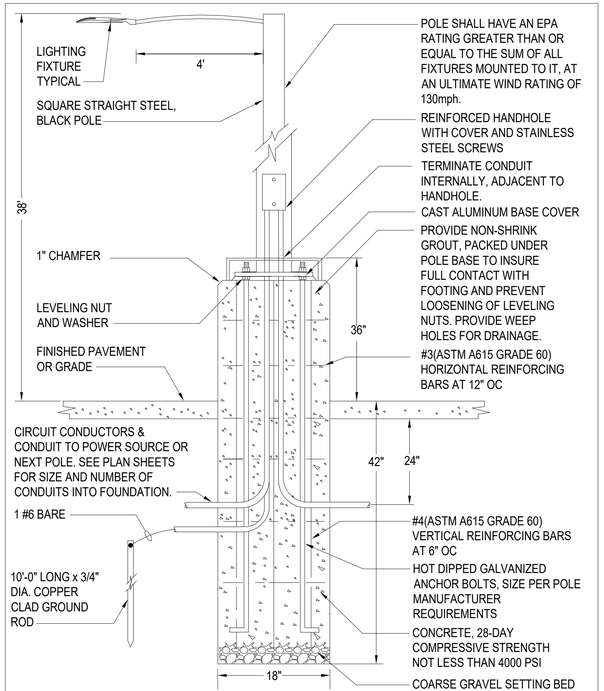

CONCRETE BASE DETAIL

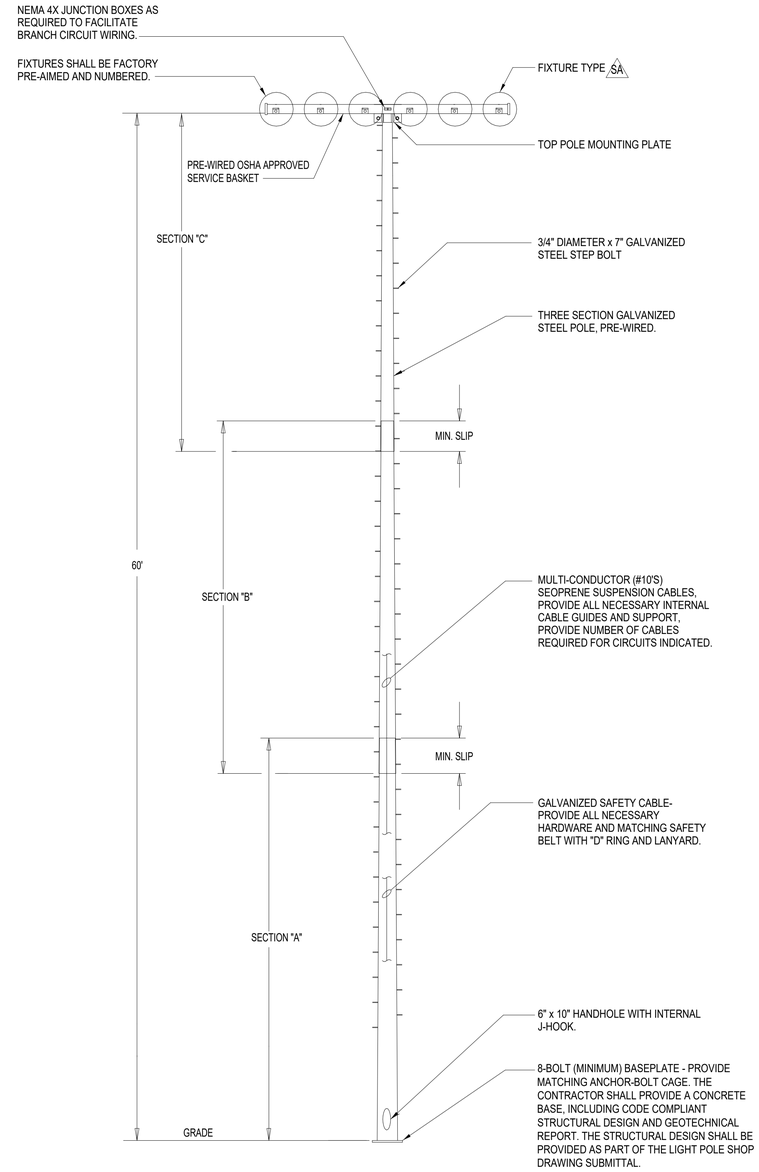

TYPE "S" LIGHTING POLE DETAIL

NO SCALE

WALKER the GROUP ARCHITECTURE incorporated
PO BOX 541, NEW BERN, NC 28563
252-636-8778

NORTH CAROLINA PROFESSIONAL SEAL 053623 ENGINEER KEVEN P. MEARS

CRAVEN COMMUNITY COLLEGE- PUBLIC SAFETY TRAINING CENTER

525 Executive Pkwy
New Bern, NC 28562

BID DOCUMENTS

SCO # 24-27879-01A

Revisions

No.	Date

Project Number: 2407.SAFE
Date: 07/28/25
Drawn: BWS
Checked: JEB
Scale: AS NOTED
Drawing Title

DETAILS

Sheet Number
Of 157

Drawing Number
E-503

Pace COLLABORATIVE
MECHANICAL ELECTRICAL ENGINEERS
WWW.PACE-ENGINEERING.COM

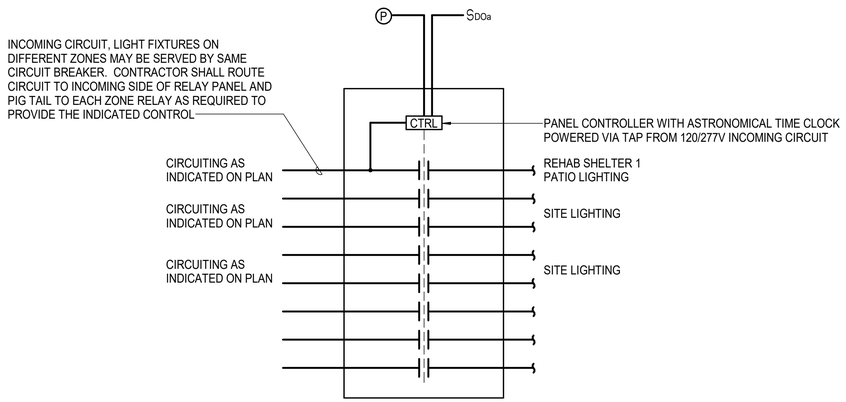

NOTES:

1. EXTERIOR LIGHTING SHALL BE CONTROLLED VIA PHOTOCELL AND INTEGRAL TIME CLOCK.
2. DETAIL BASED ON HUBBELL "CX" LIGHTING CONTROL PANEL.
3. PANEL SHALL COMPLY WITH NEC 409.110
4. PROVIDE LABELING IN ACCORDANCE WITH NEC 409.110.

LIGHTING CONTROL PANEL "LRP-1" DETAIL

NO SCALE

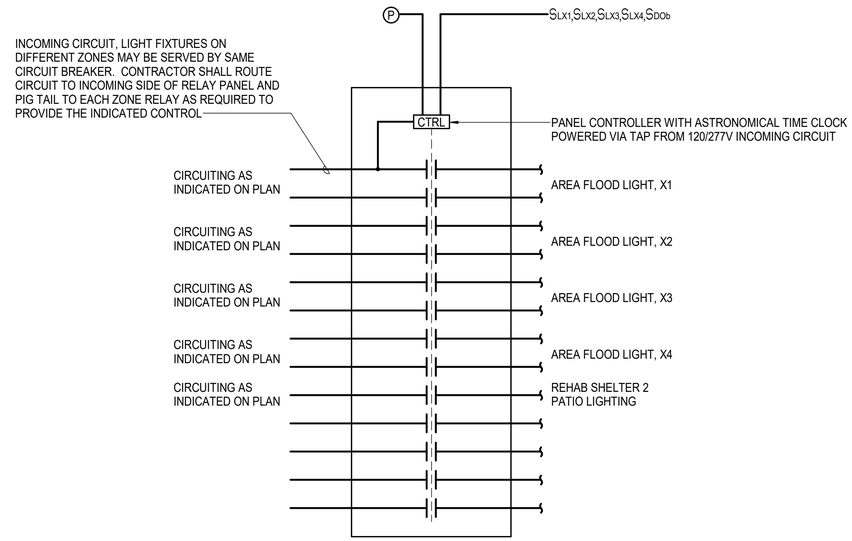

NOTES:

1. PATIO SHALL BE CONTROLLED VIA PHOTOCELL AND INTEGRAL TIME CLOCK.
2. DETAIL BASED ON HUBBELL "CX" LIGHTING CONTROL PANEL.
3. AREA FLOOD LIGHTS SHALL BE CONTROLLED VIA SWITCHES
4. PROVIDE LABELING IN ACCORDANCE WITH NEC 409.110.

LIGHTING CONTROL PANEL "LRP-2" DETAIL

NO SCALE

LIGHTING CONTROL SCHEDULE

SPACE TYPE	CONTROL FUNCTIONALITY										
	CONTROLLER TYPE	MANUAL CONTROL	DIMMING	OCCUPANCY SENSING							AUTOMATIC RECEPTACLE CONTROL
				AUTO ON TO 50%	OR	VACANCY (MANUAL ON)	AUTO ON TO 100%	AUTO DIM TO 20%	AUTO DIM TO 50%	AUTO OFF AFTER HOURS (TIME OF DAY)	
CLASSROOM / LECTURE / TRAINING	ROOM CONTROLLER	X	X	X	OR						X
CONFERENCE / MEETING / MULTIPURPOSE	ROOM CONTROLLER	X	X	X	OR						X
STORAGE ROOM	WALL SWITCH / SENSOR	X			OR	X					
RESTROOM (SINGLE)	WALL SWITCH / SENSOR	X					X				
LOBBIES	ROOM CONTROLLER	X	X				X		X	X	
ELECTRICAL ROOM	WALL SWITCH	X									
MECHANICAL ROOM	WALL SWITCH	X									
PATIO	RELAY PANEL	X								X	

GENERAL NOTES:

- SUBSCIPTS ON PLANS INDICATE SEPARATE LIGHTING CONTROL ZONES. PROVIDE ALL REQUIRED ACESSORIES TO CONTROL EACH ZONE SEPARATELY AND AS NOTED HEREIN.
- ROOM CONTROLLERS ARE NOT LOCATED ON PLANS. PROVIDE WHERE INDICATED AND QUANTITY AS REQUIRED TO ACHIEVE CONTROL FUNCTIONALITY INDICATED.
- AUTO OFF OR AUTO DIM CONTROLS SHALL BE PROGRAMMED TO FUNCTION WITHIN 20 MINUTES AFTER ALL OCCUPANTS HAVE LEFT THE SPACE.
- COORDINATE NORMAL BUSINESS HOURS WITH OWNER FOR PROGRAMMING PURPOSES.

EMERGENCY LIGHTING NOTES:

- EMERGENCY LIGHTING SHALL BE PROVIDED VIA BATTERY BACKUP, UON. CONNECT BATTERY AHEAD OF ALL CONTROLS TO AUTOMATICALLY ILLUMINATE FIXTURE UPON LOSS OF NORMAL POWER.
- SUBSCRIPT "NL" INDICATES NIGHT LIGHT (ALL DRIVERS UNSWITCHED) FOR 24/7 OPERATION.
- PROVIDE EMERGENCY FIXTURES WITH UL924 RELAY TO ALLOW CONTROL OF LIGHT FIXTURES

DAYLIGHT RESPONSIVE CONTROLS:

- AUTOMATIC DAYLIGHT RESPONSIVE CONTROLS...
- DAYLIGHT RESPONSIVE CONTROLS SHALL BE...

CORRIDOR AND LOBBY LIGHTING NOTES:

- DURING NORMAL BUSINESS HOURS, LIGHTING...
- AFTER NORMAL BUSINESS HOURS, LIGHTING...

AUTOMATIC RECEPTACLE CONTROL NOTES:

- THE TOP HALF OF RECEPTACLES IN SPACES...
- ALL CONTROLLED RECEPTACLES SHALL BE...

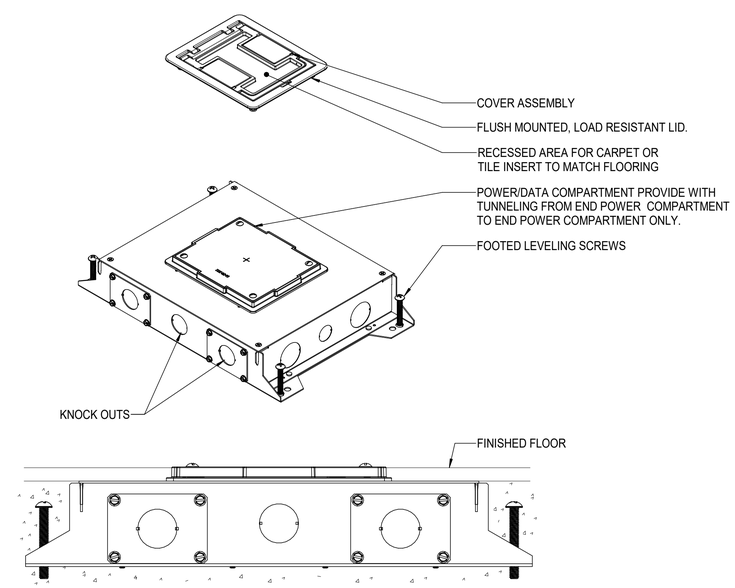

NOTES:

1. WIREMOLD RFBA2R30 SERIES - PROVIDE (1) DUPLEX 20A, 120V RECEPTACLE.
2. WIREMOLD RFBA4R30 SERIES. PROVIDE (1) DUPLEX 20A, 120V RECEPTACLE AND (1) DATA OUTLET.
3. WIREMOLD RFBA6R30 SERIES.PROVIDE (2) DUPLEX 20A, 120V RECEPTACLE AND (2) DATA OUTLET.

MULTISERVICE FLUSH FLOOR BOX

NO SCALE

WALKER the GROUP ARCHITECTURE incorporated
PO BOX 541, NEW BERN, NC 28563
252-636-8778

NORTH CAROLINA PROFESSIONAL SEAL 053623 ENGINEER KEVEN P. MEARS

CRAVEN COMMUNITY COLLEGE-PUBLIC SAFETY TRAINING CENTER

525 Executive Pkwy
New Bern, NC 28562

BID DOCUMENTS

SCO # 24-27879-01A

No.	Date	Revisions

Project Number: 2407.SAFE
Date: 07/28/25
Drawn: BWS
Checked: JEB
Scale: AS NOTED
Drawing Title: **DETAILS**

Sheet Number
Of 157

Drawing Number
E-504

PACE COLLABORATIVE MECHANICAL ELECTRICAL ENGINEERS WWW.PACE-ENGINEERING.COM

PANELBOARD MDP SCHEDULE

SEE POWER RISER DIAGRAM FOR RATINGS

LOAD SERVED	BRK TRP	NO. POLES	CKT NO.	WIRE AND CONDUIT SIZE	A	B	A	B	WIRE AND CONDUIT SIZE	CKT NO.	NO. POLES	BRK TRP	LOAD SERVED
RS1	20 A	2	1,3	- SEE RISER DIAGRAM -	38.4 A	36.4 A	54.8 A	46.5 A	- SEE RISER DIAGRAM -	2,4	2	20 A	RS2
GH	20 A	2	5,7	- SEE RISER DIAGRAM -	13.8 A	11.8 A	0 A	0 A	--	6	1	150 A	MODULAR CLASSROOM
									--	8	1	20 A	SPARE
SMOKE GENERATOR	20 A	1	9	1-#4, 1-#4, 1-#4 GND - 1"C	12 A		0 A		--	10	1	20 A	SPARE
SPD	60 A	2	11,13	--		0 A		0 A	--	12	1	20 A	SPARE
					0 A		0 A		--	14	1	20 A	SPARE
SPARE	20 A	1	15	--		0 A		0 A	--	16	1	20 A	SPARE
SPARE	20 A	1	17	--	0 A		0 A		--	18	1	20 A	SPARE
SPARE	20 A	1	19	--		0 A		0 A	--	20	1	20 A	SPARE
SPARE	20 A	1	21	--	0 A		0 A		--	22	1	20 A	SPARE
SPARE	20 A	1	23	--		0 A		0 A	--	24	1	20 A	SPARE

TOTAL CONNECTED AMPS: A: 119 A B: 94.7 A

Load Classification	Connected Load	Demand Factor	Estimated Demand	Panel Totals	
EXTERIOR LIGHTING	4252 VA	125.00%	5315 VA		
HEATING	10565 VA	100.00%	10565 VA	Total Conn. Load:	25641 VA
LIGHTING	218 VA	125.00%	273 VA	Total Est. Demand:	26759 VA
MISCELLANEOUS	5520 VA	100.00%	5520 VA	Total Conn. Current:	106.8 A
PANELS	0 VA	0.00%	0 VA	Total Est. Demand Current:	111.5 A
RECEPTACLES	4980 VA	100.00%	4980 VA		
VENTILATION	106 VA	100.00%	106 VA		

Notes:

PANELBOARD GH SCHEDULE

SEE POWER RISER DIAGRAM FOR RATINGS

LOAD SERVED	BRK TRP	NO. POLES	CKT NO.	WIRE AND CONDUIT SIZE	A	B	A	B	WIRE AND CONDUIT SIZE	CKT NO.	NO. POLES	BRK TRP	LOAD SERVED
LIGHTING	20 A	1	1	1-#12, 1-#12, 1-#12 GND - 1/2"	0.5 A		4.5 A		1-#12, 1-#12, 1-#12 GND - 1/2"	2	1	20 A	RECEPTACLES
DSS-2A/1A	25 A	2	3,5	2-#10, 1-#10 GND - 1/2"		8.8 A		3 A	1-#12, 1-#12, 1-#12 GND - 1/2"	4	1	20 A	RECEPTACLES OFFICE 101
					8.8 A		0 A		--	6	1	20 A	SPARE
SPARE	20 A	1	7	--		0 A		0 A	--	8	1	20 A	SPARE
SPARE	20 A	1	9	--	0 A		0 A		--	10	1	20 A	SPARE
SPARE	20 A	1	11	--		0 A		0 A	--	12	1	20 A	SPARE
SPARE	20 A	1	13	--	0 A		0 A		--	14	1	20 A	SPARE
SPARE	20 A	1	15	--		0 A		0 A	--	16	1	20 A	SPARE
SPARE	20 A	1	17	--	0 A		0 A		--	18	1	20 A	SPARE
SPARE	20 A	1	19	--		0 A		0 A	--	20	1	20 A	SPARE
SPARE	20 A	1	21	--	0 A		0 A		--	22	1	20 A	SPARE
SPARE	20 A	1	23	--		0 A		0 A	--	24	1	20 A	SPARE

TOTAL CONNECTED AMPS: A: 13.8 A B: 11.8 A

Load Classification	Connected Load	Demand Factor	Estimated Demand	Panel Totals	
EXTERIOR LIGHTING	32 VA	125.00%	40 VA		
HEATING	2112 VA	100.00%	2112 VA	Total Conn. Load:	3074 VA
LIGHTING	30 VA	125.00%	38 VA	Total Est. Demand:	3090 VA
RECEPTACLES	900 VA	100.00%	900 VA	Total Conn. Current:	12.8 A
				Total Est. Demand Current:	12.9 A

Notes:

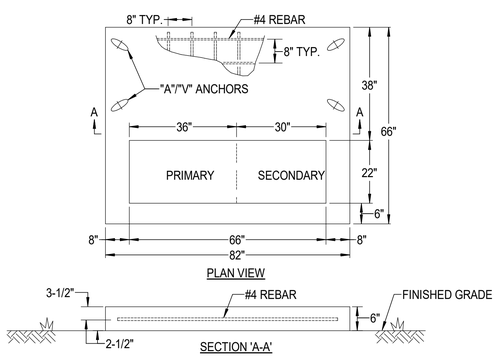

CONCRETE PAD FOR SERVICE TRANSFORMER SERVING MDP

NO SCALE

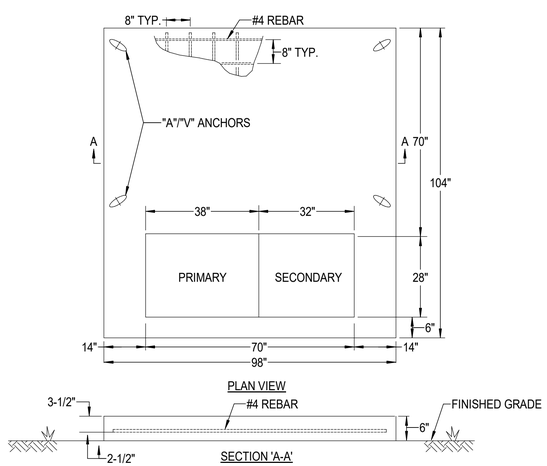

CONCRETE PAD FOR SERVICE TRANSFORMER SERVING RMDP

NO SCALE

NOTES THIS SHEET

1 FEEDER SHALL BE ROUTED UNDERGROUND IN DUCTBANK. REFER TO DUCTBANK DETAILS ON SHEET E-501.

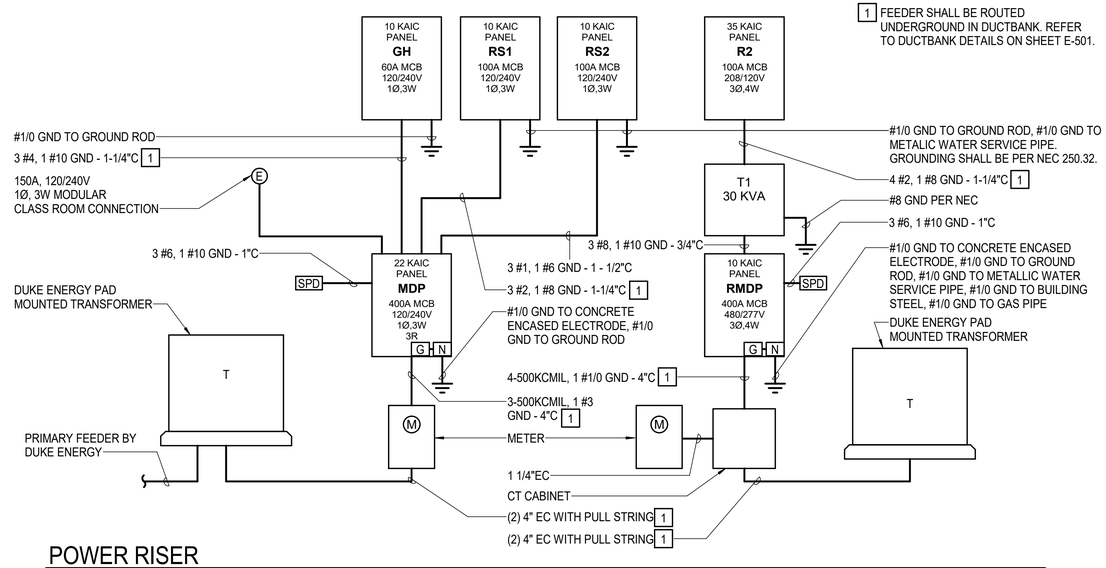

POWER RISER

NO SCALE

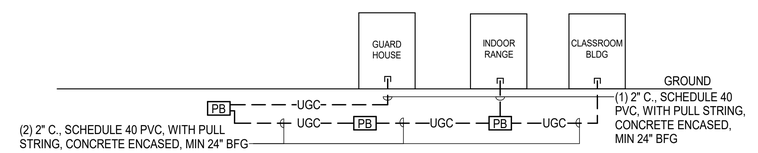

TELECOMMUNICATIONS RISER DIAGRAM

NO SCALE

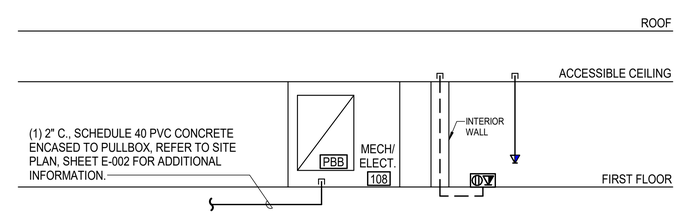

NOTES:

1. MINIMUM CONDUIT SIZE SHALL BE 1" UON.
2. PROVIDE CONDUIT SLEEVES WHERE CABLES PASS THROUGH WALLS, FLOORS, OR CEILINGS.

INDOOR RANGE TELECOMMUNICATIONS RISER DIAGRAM

NO SCALE

WALKER the GROUP ARCHITECTURE incorporated
PO BOX 541, NEW BERN, NC 28563
252-636-8778

NORTH CAROLINA PROFESSIONAL SEAL 053623 ENGINEER KEVEN P. MEARS

CRAVEN COMMUNITY COLLEGE-PUBLIC SAFETY TRAINING CENTER

525 Executive Pkwy
New Bern, NC 28562

BID DOCUMENTS

SCO # 24-27879-01A

No.	Date	Revisions

Project Number 2407.SAFE	Date 07/28/25
Drawn BWS	Checked JEB
Scale AS NOTED	

Drawing Title

RISER DIAGRAM & SCHEDULES

Sheet Number

Of 157

Drawing Number

E-601

Pace COLLABORATIVE MECHANICAL ELECTRICAL ENGINEERS WWW.PACE-ENGINEERING.COM

PANELBOARD RMDP SCHEDULE

SEE POWER RISER DIAGRAM FOR RATINGS

LOAD SERVED	BRK TRP	NO. POLES	CKT NO.	WIRE AND CONDUIT SIZE	A	B	C	A	B	C	WIRE AND CONDUIT SIZE	CKT NO.	NO. POLES	BRK TRP	LOAD SERVED
R2	50 A	3	1	- SEE RISER DIAGRAM -	25.9 A			11.2 A			3-#12, 1-#12 GND - 1/2"	2	3	20 A	RTU-1
			3			24 A			11.2 A			4			
			5				23.4 A			11.2 A		6			
RTU-2	15 A	3	7	3-#12, 1-#12 GND - 1/2"	8.8 A			183 A			3-#3/0, 1-#6 GND - 2"C	8	3	200 A	MAU-1
			9			8.8 A			183 A			10			
			11				8.8 A			183 A		12			
EF-1-RANGE	150 A	3	13	3-#1/0, 1-#6 GND - 1-1/4"C	77 A			0 A			--	14	1	20 A	SPARE
			15			77 A			0 A		--	16	1	20 A	SPARE
			17				77 A			0 A	--	18	1	20 A	SPARE
SPD	60 A	3	19	--	0 A			0 A			--	20	1	20 A	SPARE
			21			0 A			0 A		--	22	1	20 A	SPARE
			23				0 A			0 A	--	24	1	20 A	SPARE
SPARE	20 A	1	25	--	0 A			0 A			--	26	1	20 A	SPARE
SPARE	20 A	1	27	--		0 A			0 A		--	28	1	20 A	SPARE
SPARE	20 A	1	29	--			0 A			0 A	--	30	1	20 A	SPARE
SPARE	20 A	1	31	--	0 A			0 A			--	32	1	20 A	SPARE
SPARE	20 A	1	33	--		0 A			0 A		--	34	1	20 A	SPARE
SPARE	20 A	1	35	--			0 A			0 A	--	36	1	20 A	SPARE
SPARE	20 A	1	37	--	0 A			0 A			--	38	1	20 A	SPARE
SPARE	20 A	1	39	--		0 A			0 A		--	40	1	20 A	SPARE
SPARE	20 A	1	41	--			0 A			0 A	--	42	1	20 A	SPARE

TOTAL CONNECTED AMPS: A: 305.9 A B: 304 A C: 303.4 A

Load Classification	Connected Load	Demand Factor	Estimated Demand	Panel Totals	
AIR CONDITIONING	16620 VA	100.00%	16620 VA		
EXTERIOR LIGHTING	136 VA	125.00%	170 VA	**Total Conn. Load:**	252930 VA
LIGHTING	2463 VA	125.00%	3079 VA	**Total Est. Demand:**	253580 VA
MISCELLANEOUS	224543 VA	100.00%	224543 VA	**Total Conn. Current:**	304.2 A
RECEPTACLES	8280 VA	100.00%	8280 VA	**Total Est. Demand Current:**	305 A
VENTILATION	888 VA	100.00%	888 VA		

Notes:

PANELBOARD R2 SCHEDULE

SEE POWER RISER DIAGRAM FOR RATINGS

LOAD SERVED	BRK TRP	NO. POLES	CKT NO.	WIRE AND CONDUIT SIZE	A	B	C	A	B	C	WIRE AND CONDUIT SIZE	CKT NO.	NO. POLES	BRK TRP	LOAD SERVED
LIGHTING	20 A	1	1	1-#12, 1-#12, 1-#12 GND - 1/2"	7.6 A			7.9 A			1-#12, 1-#12, 1-#12 GND - 1/2"	2	1	20 A	RECEPTACLES
RANGE LIGHTING	20 A	1	3	1-#12, 1-#12, 1-#12 GND - 3/4"		5.6 A			10.5 A		1-#12, 1-#12, 1-#12 GND - 1/2"	4	1	20 A	RECEPTACLES
RECEPTACLES	20 A	1	5	1-#12, 1-#12, 1-#12 GND - 1/2"			9 A			6 A	1-#12, 1-#12, 1-#12 GND - 1/2"	6	1	20 A	RECEPTACLES
RECEPTACLES	20 A	1	7	1-#12, 1-#12, 1-#12 GND - 1/2"	7.5 A			6 A			1-#12, 1-#12, 1-#12 GND - 1/2"	8	1	20 A	RECEPTACLES
RECEPTACLES	20 A	1	9	1-#12, 1-#12, 1-#12 GND - 1/2"		6 A			1.5 A		1-#12, 1-#12, 1-#12 GND - 1/2"	10	1	20 A	COPIER / PRINTER
EF-1	20 A	1	11	1-#12, 1-#12, 1-#12 GND - 1/2"			3 A			3 A	1-#12, 1-#12, 1-#12 GND - 1/2"	12	1	20 A	ROOFTOP RECEPTACLES
EF-2	20 A	1	13	1-#12, 1-#12, 1-#12 GND - 1/2"	4.4 A			1 A			1-#12, 1-#12, 1-#12 GND - 1/2"	14	1	20 A	GUH-1
WH-1	20 A	2	15	2-#12, 1-#12 GND - 1/2"		14.4 A			6 A		1-#10, 1-#10, 1-#10 GND - 1/2"	16	1	20 A	RECEPTACLES
			17				14.4 A			1.1 A	1-#12, 1-#12, 1-#12 GND - 1/2"	18	1	20 A	EXTERIOR LIGHTING
DYNAMIC RANGE MOVER PRO	20 A	2	19	2-#12, 1-#12 GND - 1/2"	10 A			1.5 A			1-#12, 1-#12, 1-#12 GND - 1/2"	20	1	20 A	RECEPTACLES ^
			21			10 A			4.5 A		1-#12, 1-#12, 1-#12 GND - 1/2"	22	1	20 A	RECEPTACLES
RANGE LIGHTING	20 A	1	23	1-#10, 1-#10, 1-#10 GND - 1/2"			7.4 A			13.8 A	2-#12, 1-#12 GND - 1/2"	24	2	20 A	PS-1
DDC PANEL	20 A	1	25	1-#12, 1-#12, 1-#12 GND - 1/2"	3 A			13.8 A				26			
SPARE	20 A	1	27	--		0 A			0 A		--	28	1	20 A	SPARE
SPARE	20 A	1	29	--			0 A			0 A	--	30	1	20 A	SPARE
SPARE	20 A	1	31	--	0 A			0 A			--	32	1	20 A	SPARE
SPARE	20 A	1	33	--		0 A			0 A		--	34	1	20 A	SPARE
SPARE	20 A	1	35	--			0 A			0 A	--	36	1	20 A	SPARE
SPARE	20 A	1	37	--	0 A			0 A			--	38	1	20 A	SPARE
SPARE	20 A	1	39	--		0 A			0 A		--	40	1	20 A	SPARE
SPARE	20 A	1	41	--			0 A			0 A	--	42	1	20 A	SPARE

TOTAL CONNECTED AMPS: A: 59.7 A B: 55.4 A C: 54 A

Load Classification	Connected Load	Demand Factor	Estimated Demand	Panel Totals	
EXTERIOR LIGHTING	136 VA	125.00%	170 VA		
LIGHTING	2463 VA	125.00%	3079 VA	**Total Conn. Load:**	20250 VA
MISCELLANEOUS	8483 VA	100.00%	8483 VA	**Total Est. Demand:**	20900 VA
RECEPTACLES	8280 VA	100.00%	8280 VA	**Total Conn. Current:**	56.2 A
VENTILATION	888 VA	100.00%	888 VA	**Total Est. Demand Current:**	58 A

Notes:

" ^ " PROVIDE GFI TYPE CIRCUIT BREAKER AND CONNECT LOAD.

PANELBOARD RS1 SCHEDULE

SEE POWER RISER DIAGRAM FOR RATINGS

LOAD SERVED	BRK TRP	NO. POLES	CKT NO.	WIRE AND CONDUIT SIZE	A	B	A	B	WIRE AND CONDUIT SIZE	CKT NO.	NO. POLES	BRK TRP	LOAD SERVED
SITE LIGHTING	20 A	2	1,3	2-#10, 1-#10 GND - 1"C	2.9 A		0 A		2-#12, 1-#12 GND - 1"C	2,4	2	20 A	SITE LIGHTING
						2.9 A		0 A					
UH-R1-1	20 A	1	5	1-#12, 1-#12, 1-#12 GND - 1/2"	7.5 A		1.1 A		1-#12, 1-#12, 1-#12 GND - 1/2"	6	1	20 A	LIGHTING, EF-R1-1,3
UH-R1-2	20 A	1	7	1-#12, 1-#12, 1-#12 GND - 1/2"		7.5 A		7.9 A	1-#12, 1-#12, 1-#12 GND - 1/2"	8	1	20 A	REC
UH-R1-3	20 A	1	9	1-#12, 1-#12, 1-#12 GND - 1/2"	10.4 A		0.1 A		1-#12, 1-#12, 1-#12 GND - 1/2"	10	1	20 A	EF-R1-2
WH-2R1	20 A	2	11,13	2-#12, 1-#12 GND - 1/2"		8.3 A		9.8 A	1-#12, 1-#12, 1-#12 GND - 1/2"	12	1	20 A	BF-R1-1
					8.3 A		8 A		1-#12, 1-#12, 1-#12 GND - 1/2"	14	1	20 A	EWC ^
SPARE	20 A	1	15	--		0 A		0 A	2-#12, 1-#12 GND - 1"C	16,18	2	20 A	PS-3
SPARE	20 A	1	17	--	0 A		0 A						
SPARE	20 A	1	19	--		0 A		0 A	--	20	1	20 A	SPARE
SPARE	20 A	1	21	--	0 A		0 A		--	22	1	20 A	SPARE
SPARE	20 A	1	23	--		0 A		0 A	--	24	1	20 A	SPARE
SPARE	20 A	1	25	--	0 A		0 A		--	26	1	20 A	SPARE
SPARE	20 A	1	27	--		0 A		0 A	--	28	1	20 A	SPARE
SPARE	20 A	1	29	--	0 A		0 A		--	30	1	20 A	SPARE
SPARE	20 A	1	31	--		0 A		0 A	--	32	1	20 A	SPARE
SPARE	20 A	1	33	--	0 A		0 A		--	34	1	20 A	SPARE
SPARE	20 A	1	35	--		0 A		0 A	--	36	1	20 A	SPARE
SPARE	20 A	1	37	--	0 A		0 A		--	38	1	20 A	SPARE
SPARE	20 A	1	39	--		0 A		0 A	--	40	1	20 A	SPARE
SPARE	20 A	1	41	--	0 A		0 A		--	42	1	20 A	SPARE

TOTAL CONNECTED AMPS: A: 38.4 A B: 36.4 A

Load Classification	Connected Load	Demand Factor	Estimated Demand	Panel Totals	
EXTERIOR LIGHTING	700 VA	125.00%	875 VA		
HEATING	4226 VA	100.00%	4226 VA	**Total Conn. Load:**	8973 VA
LIGHTING	94 VA	125.00%	118 VA	**Total Est. Demand:**	9172 VA
MISCELLANEOUS	2040 VA	100.00%	2040 VA	**Total Conn. Current:**	37.4 A
PANELS	0 VA	0.00%	0 VA	**Total Est. Demand Current:**	38.2 A
RECEPTACLES	1860 VA	100.00%	1860 VA		
VENTILATION	53 VA	100.00%	53 VA		

Notes:

" ^ " PROVIDE GFI TYPE CIRCUIT BREAKER AND CONNECT LOAD.

PANELBOARD RS2 SCHEDULE

SEE POWER RISER DIAGRAM FOR RATINGS

LOAD SERVED	BRK TRP	NO. POLES	CKT NO.	WIRE AND CONDUIT SIZE	A	B	A	B	WIRE AND CONDUIT SIZE	CKT NO.	NO. POLES	BRK TRP	LOAD SERVED
AREA FLOOD LIGHT, X1	20 A	2	1,3	2-#12, 1-#12 GND - 1"C	6.7 A		3.7 A		2-#10, 1-#10 GND - 1"C	2,4	2	20 A	AREA FLOOD LIGHT, X4
						3.7 A		3.7 A					
AREA FLOOD LIGHT, X3	20 A	2	5,7	2-#8, 1-#8 GND - 1"C	3.7 A		3.7 A		2-#12, 1-#12 GND - 1"C	6,8	2	20 A	AREA FLOOD LIGHT, X2
						3.7 A		3.7 A					
SPARE	20 A	1	9	--	0 A		1.1 A		1-#12, 1-#12, 1-#12 GND - 1/2"	10	1	20 A	LIGHTING, EF-R2-1,3
UH-R2-1	20 A	1	11	1-#12, 1-#12, 1-#12 GND - 1/2"		7.5 A		0.1 A	1-#12, 1-#12, 1-#12 GND - 1/2"	12	1	20 A	EF-R2-2
UH-R2-2	20 A	1	13	1-#12, 1-#12, 1-#12 GND - 1/2"	7.5 A		8.3 A		2-#12, 1-#12 GND - 1/2"	14,16	2	20 A	WH-2R2
REC	20 A	1	15	1-#12, 1-#12, 1-#12 GND - 1/2"		7.9 A		8.3 A					
UH-R2-3	20 A	1	17	1-#12, 1-#12, 1-#12 GND - 1/2"	10.4 A		9.8 A		1-#12, 1-#12, 1-#12 GND - 1/2"	18	1	20 A	BF-R2-1
EWC ^	20 A	1	19	1-#12, 1-#12, 1-#12 GND - 1/2"		8 A		0 A	2-#12, 1-#12 GND - 1"C	20,22	2	20 A	PS-4
SPARE	20 A	1	21	--	0 A		0 A						
SPARE	20 A	1	23	--		0 A		0 A	--	24	1	20 A	SPARE
SPARE	20 A	1	25	--	0 A		0 A		--	26	1	20 A	SPARE
SPARE	20 A	1	27	--		0 A		0 A	--	28	1	20 A	SPARE
SPARE	20 A	1	29	--	0 A		0 A		--	30	1	20 A	SPARE
SPARE	20 A	1	31	--		0 A		0 A	--	32	1	20 A	SPARE
SPARE	20 A	1	33	--	0 A		0 A		--	34	1	20 A	SPARE
SPARE	20 A	1	35	--		0 A		0 A	--	36	1	20 A	SPARE
SPARE	20 A	1	37	--	0 A		0 A		--	38	1	20 A	SPARE
SPARE	20 A	1	39	--		0 A		0 A	--	40	1	20 A	SPARE
SPARE	20 A	1	41	--	0 A		0 A		--	42	1	20 A	SPARE

TOTAL CONNECTED AMPS: A: 54.8 A B: 46.5 A

Load Classification	Connected Load	Demand Factor	Estimated Demand	Panel Totals	
EXTERIOR LIGHTING	3520 VA	125.00%	4400 VA		
HEATING	4226 VA	100.00%	4226 VA	**Total Conn. Load:**	12153 VA
LIGHTING	94 VA	125.00%	118 VA	**Total Est. Demand:**	13057 VA
MISCELLANEOUS	2040 VA	100.00%	2040 VA	**Total Conn. Current:**	50.6 A
PANELS	0 VA	0.00%	0 VA	**Total Est. Demand Current:**	54.4 A
RECEPTACLES	2220 VA	100.00%	2220 VA		
VENTILATION	53 VA	100.00%	53 VA		

Notes:

" ^ " PROVIDE GFI TYPE CIRCUIT BREAKER AND CONNECT LOAD.

WALKER the GROUP ARCHITECTURE incorporated
PO BOX 541, NEW BERN, NC 28563
252-636-8778

NORTH CAROLINA PROFESSIONAL SEAL 053623 ENGINEER KEVEN P. MEARS

CRAVEN COMMUNITY COLLEGE- PUBLIC SAFETY TRAINING CENTER

525 Executive Pkwy New Bern, NC 28562

BID DOCUMENTS

SCO # 24-27879-01A

Revisions

No.	Date

Project Number: 2407.SAFE
Date: 07/28/25
Drawn: BWS
Checked: JEB
Scale: AS NOTED

Drawing Title

PANELBOARD SCHEDULES

Sheet Number
Of 157

Drawing Number
E-602

PACE COLLABORATIVE MECHANICAL ELECTRICAL ENGINEERS WWW.PACE-ENGINEERING.COM

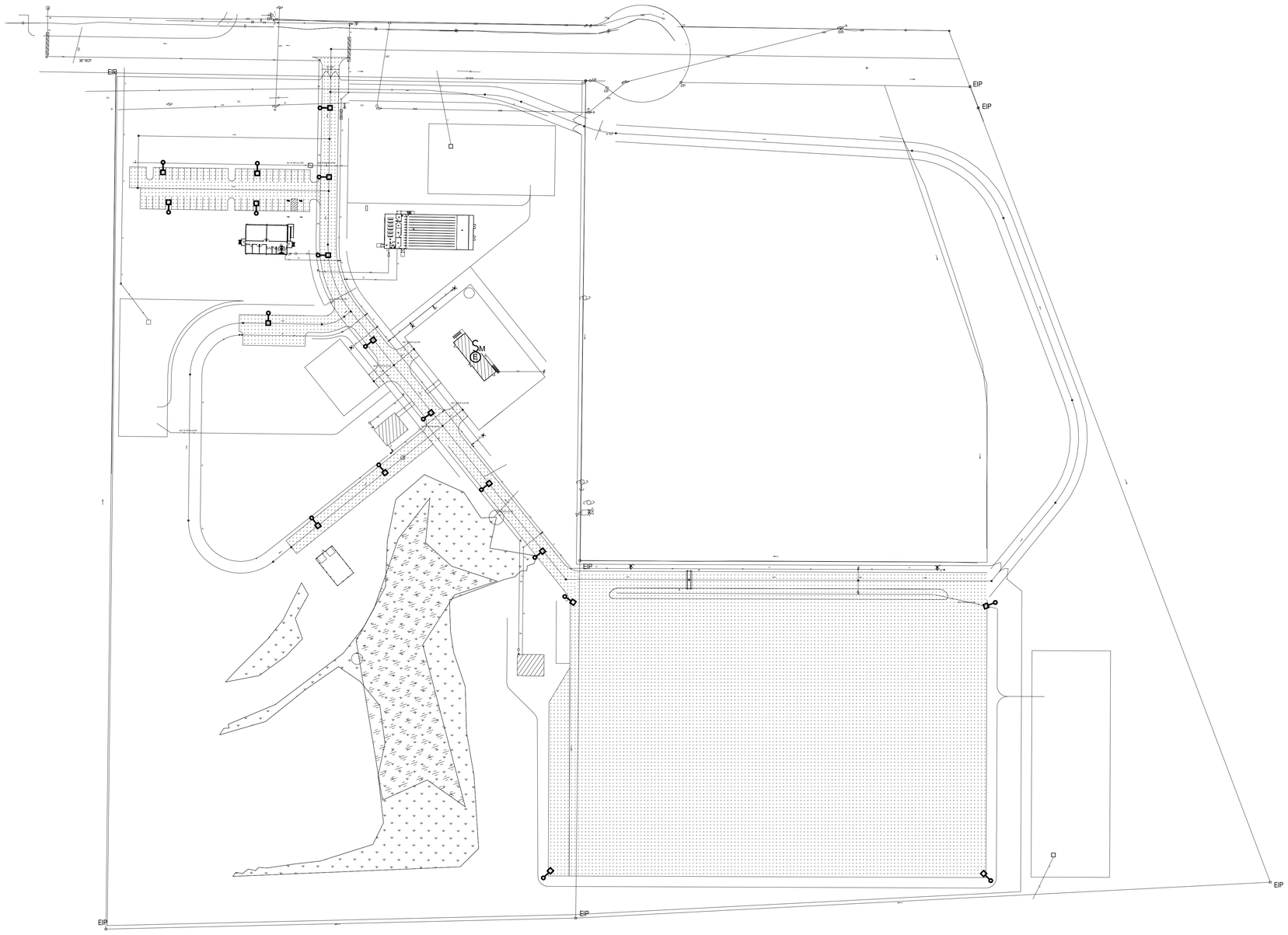

Statistics						
Description	Symbol	Avg	Max	Min	Max/Min	Avg/Min
Driving Pad	+	3.6 fc	17.1 fc	0.2 fc	85.5:1	18.0:1
Parking Lot	+	4.5 fc	10.8 fc	0.9 fc	12.0:1	5.0:1
Road	+	3.9 fc	10.6 fc	0.1 fc	106.0:1	39.0:1

SITE PLAN - PHOTOMETRICS

SCALE: 1" = 80'-0"

GRAPHIC SCALE(S)

1" = 80'-0"

80' 40' 0' 80' 160' 240'

Pace COLLABORATIVE
MECHANICAL ELECTRICAL ENGINEERS
WWW.PACE-ENGINEERING.COM

WALKER the GROUP ARCHITECTURE incorporated
PO BOX 541, NEW BERN, NC 28563
252-636-8778

NORTH CAROLINA PROFESSIONAL SEAL 053623 ENGINEER KEVEN P. MEARS

CRAVEN COMMUNITY COLLEGE- PUBLIC SAFETY TRAINING CENTER

525 Executive Pkwy
New Bern, NC 28562

BID DOCUMENTS

SCO # 24-27879-01A

Revisions

No.	Date

Project Number: 2407.SAFE
Date: 07/28/25
Drawn: BWS
Checked: JEB
Scale: AS NOTED
Drawing Title: **SITE PLAN - PHOTOMETRICS**

Sheet Number
Of 157

Drawing Number
E-901